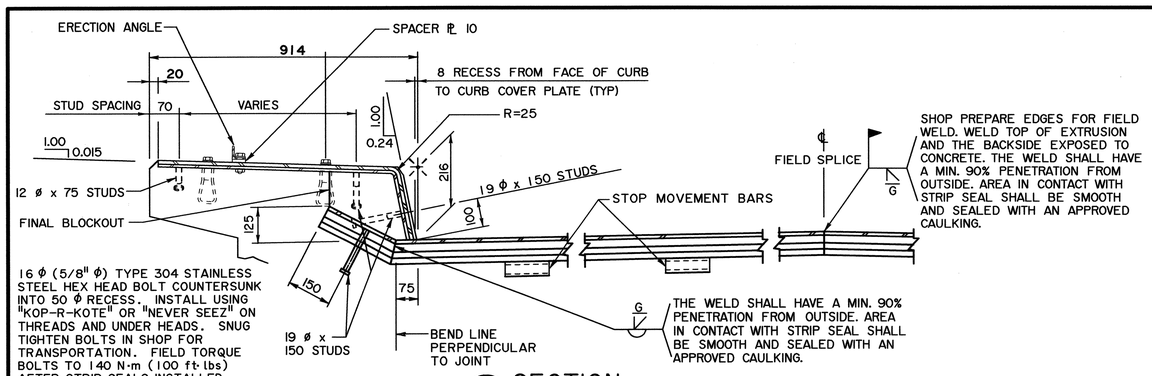

A SECTION
1:10

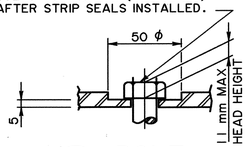

Q BOLT
REQ'D FOR CURB COVER PLATES
1:2

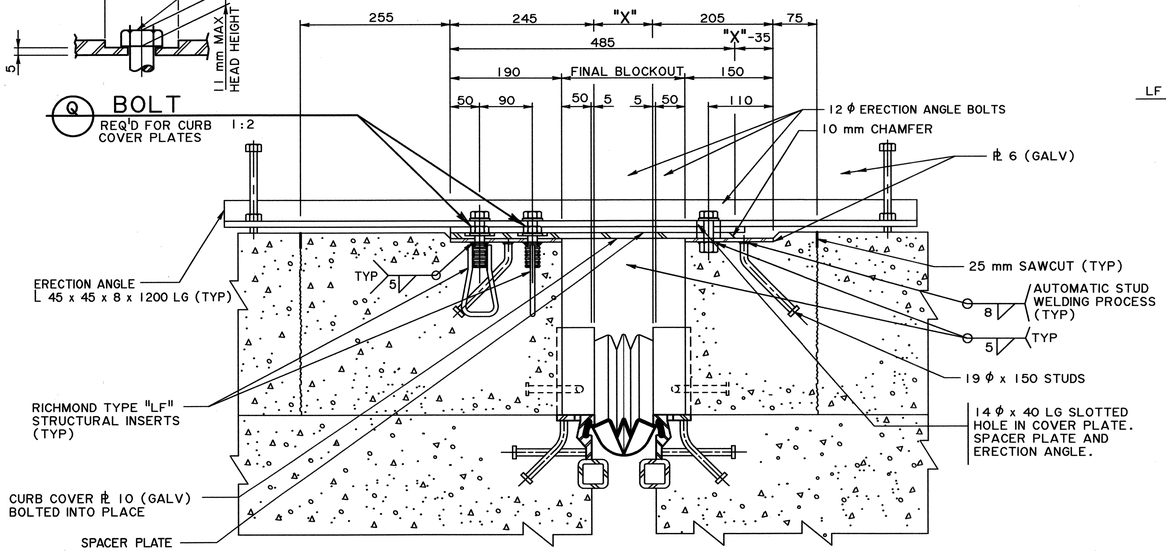

B SECTION
1:5

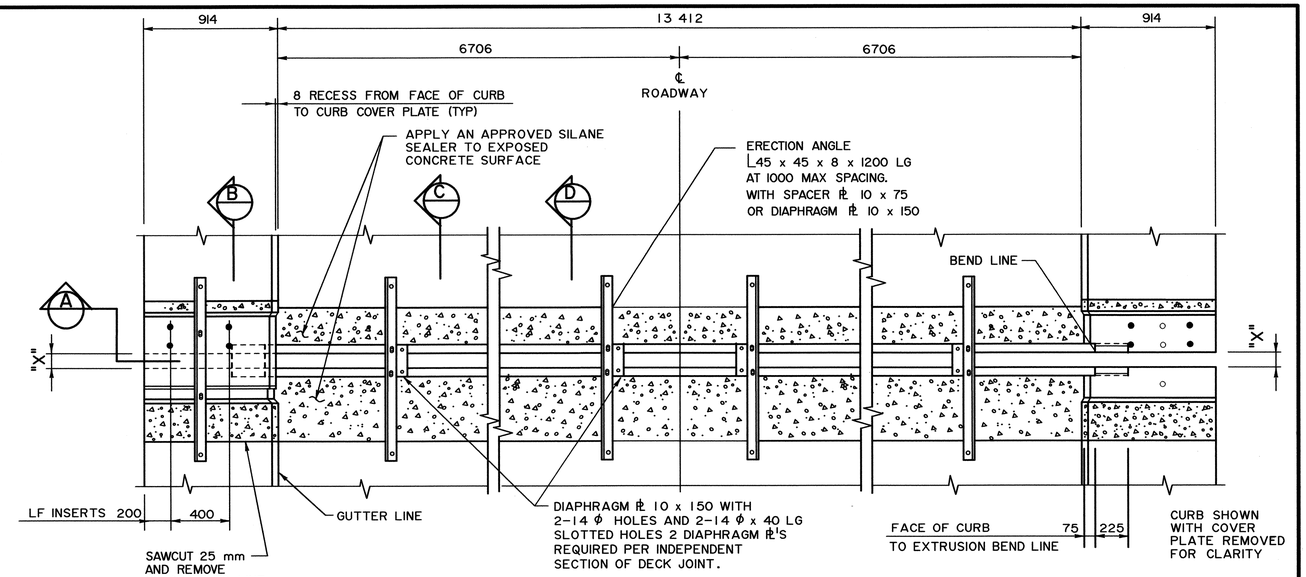

DECK JOINT ASSEMBLIES - PLAN
1 : 20

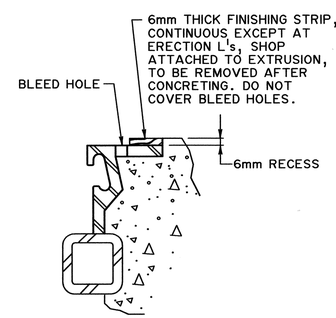

D FINISHING STRIP
1:2.5

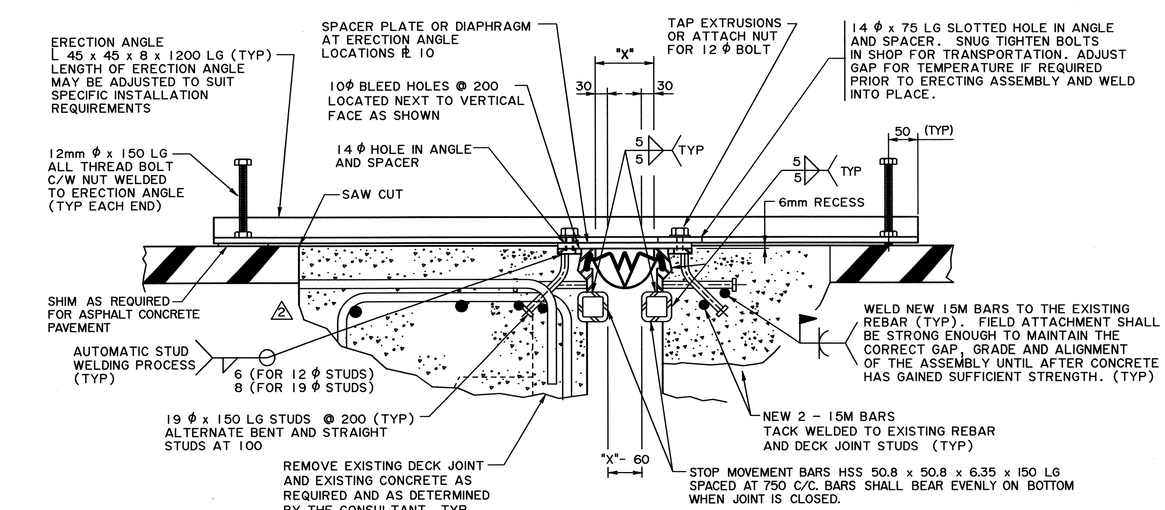

C SECTION
1:5

GENERAL NOTES

- ALL DIMENSIONS ARE IN MILLIMETRES UNLESS NOTED OTHERWISE.
- ALL STEEL SHALL CONFORM TO THE REQUIREMENTS OF CAN3- 640.2IM-300W OR ASTM A36.

MATERIALS AND FABRICATION

- CONTINUOUS SEALING SYSTEM TO BE ONE OF THE FOLLOWING TYPES:

2 USED
- **ELASTOMETAL/WATSON BOWMAN "EFE400" WITH TYPE "M" EXTRUSION**
- HONEL GSH 141 "W-DE" SYSTEM (SHOWN)
- DS BROWN "0400" SEAL WITH TYPE SSCM EXTRUSION
- AJ BRAUN BI-100 CELLULAR SYSTEM
- RJ SERIES STRIP SEAL WITH TYPE RJM EXTRUSION.
- HEXEL FYFE "FPS57" SEAL WITH TYPE C EXTRUSION
- Z - TECH SERIES "1000L"

- MULTI-WEB STRIP SEAL SHALL BE NEOPRENE, NATURAL RUBBER OR APPROVED EQUIVALENT.
- ALL REQUIREMENTS OF THE CURRENT ALBERTA INFRASTRUCTURE AND TRANSPORTATION SPECIFICATIONS FOR BRIDGE CONSTRUCTION (SECTION 6) SHALL BE MET.
- METAL EXTRUSIONS SHALL BE SUPPLIED IN TWO PIECES UNLESS NOTED OTHERWISE, STRIP SEAL SHALL BE SUPPLIED IN ONE CONTINUOUS LENGTH.
- BOLTED CURB COVER PLATES SHALL BE HOT DIP GALVANIZED AFTER FABRICATION. ALL OTHER METAL PARTS EXCEPT ERECTION ANGLES, SPACER PLATES AND STAINLESS STEEL BOLTS SHALL BE HOT DIP GALVANIZED OR ZINC METALLIZED AFTER FABRICATION.
- ALL GALVANIZING SHALL MEET ASTM SPEC A123 OR A153 AS APPLICABLE.
- ZINC METALLIZING SHALL BE 180 MICRONS THICK AND IN ACCORDANCE WITH CSA G-189.
- ALL WELDING SHALL CONFORM TO CURRENT AWS SPECIFICATION D1.5.
- SHOP ASSEMBLE FOR INSPECTION IN A RELAXED CONDITION WITH ERECTION ANGLES REMOVED. APPROVAL OF ASSEMBLY REQUIRED PRIOR TO APPLICATION OF ERECTION ANGLES.
- PRESET GAP IN SHOP FOR A TEMPERATURE OF +15°C.
- JOINT SHALL BE TRANSPORTED WITH ERECTION ANGLES ATTACHED AND THE EXTRUSION CAVITY SEALED WITH TAPE.

JOINT INSTALLATION

- ERECT ASSEMBLY.
- MAINTAIN THE DECK JOINTS' PRESET GAP UNLESS ADVISED TO RESET GAP BY THE **CONSULTANT.**
- SECURE ROADWAY PORTION OF ASSEMBLY TO GIRDERS/DECK/BACKWALL BY BOLTING/WELDING. THE ATTACHMENT SHALL BE STRONG ENOUGH TO MAINTAIN THE CORRECT GAP, GRADE AND ALIGNMENT OF THE ASSEMBLY UNTIL AFTER CONCRETE PLACEMENT.
- AFTER ASSEMBLY IS SECURELY ATTACHED, LOOSEN BOLTS IN SLOTTED HOLES IN THE ERECTION ANGLES SUFFICIENTLY TO ALLOW TEMERATURE MOVEMENT WITHOUT DAMAGING BRIDGE COMPONENTS. OBSERVE THAT CLAMPED PARTS DO NOT DEFORM WHEN BOLTS ARE LOOSENED.
- CHECK ASSEMBLY GRADE AND ELEVATION, PROCEED WITH CONCRETE PLACEMENT AFTER **APPROVAL BY CONSULTANT.**
- REMOVE ERECTION ANGLES AND FINISHING STRIPS AFTER CONCRETE HAS SET.
- REMOVE ALL FORMWORK AND CLEAN EXCESS CONCRETE AND DEBRIS FROM ASSEMBLY.
- INSTALL THE CURB PORTIONS OF THE DECK JOINT ASSEMBLY AND PLACE CONCRETE AS SPECIFIED. REMOVE CURB ASSEMBLY ERECTION ANGLES IMMEDIATELY AFTER CONCRETE IS PLACED.
- APPLY SILANE SEALER TO EXPOSED CONCRETE SURFACES.
- FIELD WELDED SPLICE SHALL BE AS PER SECTION 13 OF THE ALBERTA INFRASTRUCTURE AND TRANSPORTATION SPECIFICATIONS FOR BRIDGE CONSTRUCTION.

SEAL INSTALLATION

- REMOVE CURB COVER PLATES WHEN JOINT IS READY FOR STRIP SEAL INSTALLATION. SUPPLIER SHALL INSTALL SEAL AND TORQUE CURB COVER PLATE BOLTS TO 1/3 TURN FROM SNUG TIGHT CONDITION.

MOST Engineering (2001) Ltd.

PROFESSIONAL ENGINEER — PROVINCE OF BRITISH COLUMBIA — W. POLANICA — July 23, 2007

REV	DATE	REVISIONS	BY
4			
3			
2	2008-08-20	AS CONSTRUCTED	TDM
1	2007-09-27	ISSUED FOR CONSTRUCTION	WP

Canadian Heritage Parks Canada Western Region

OTTERTAIL RIVER BRIDGE ON HWY 1 NEAR FIELD
DECK JOINT REPLACEMENT - SHEET 2

DESIGNED BY	REVIEWED BY	DRAWN BY	PROJECT NO	SCALE	DATE	LOCATION	SHEET	DRAWING NO
WP	AFS	WJW	200715	AS NOTED	2007-07-31	YOHO NATIONIAL PARK	2 OF 2	S2-704