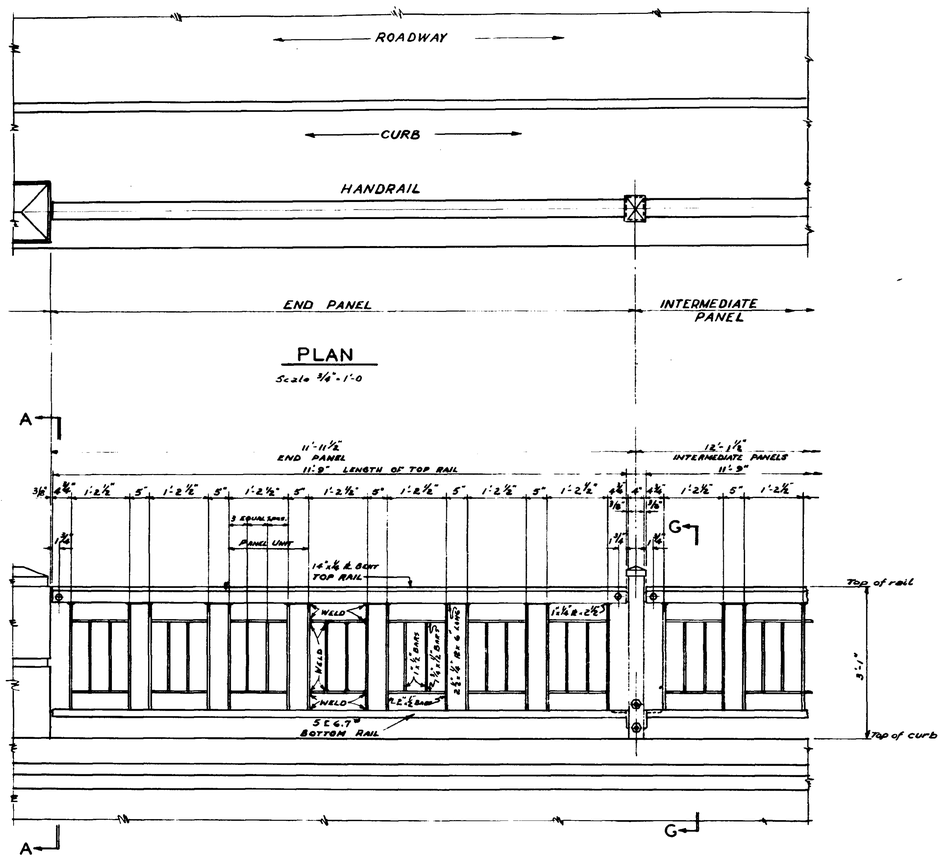

PLAN

Scale 3/8"=1'-0

ELEVATION (Showing seven panel units)

Scale 3/4"=1'-0

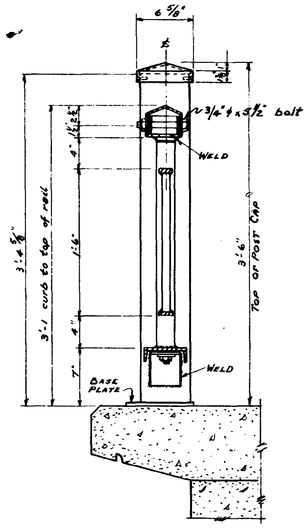

SECTION G-G

Scale 1½"=1'-0

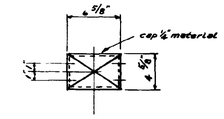

PLAN OF CAP

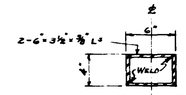

SECTION F-F

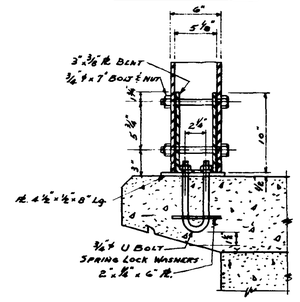

SECTION E-E

Scale 1½"=1'-0

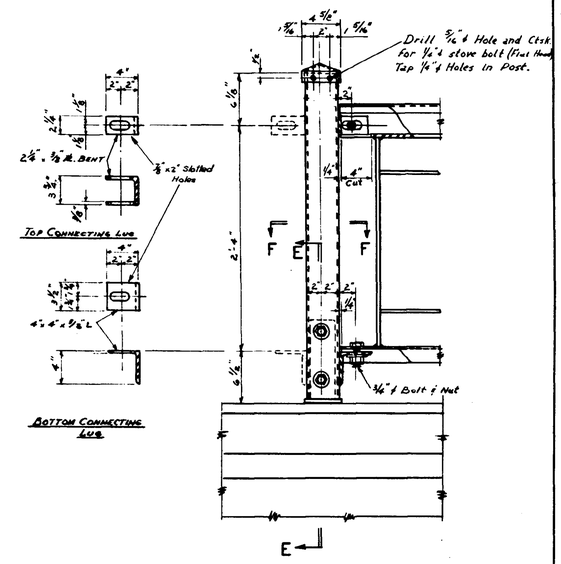

POST DETAILS

Scale 1½"=1'-0

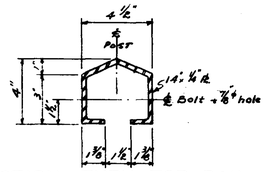

SECTION THRU TOP RAIL

Scale 3"=1'-0

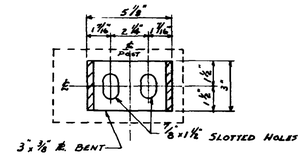

POST ANCHOR LUG

Scale 3"=1'-0

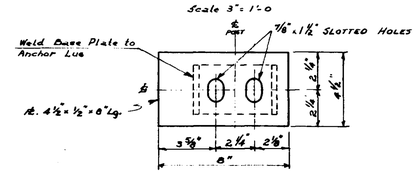

BASE PLATE

Scale 3"=1'-0

PANELS REQUIRED	STANDARD HANDRAIL DIMENSIONS			
	Panel Units	Length of Top Rail	End Panel	Intermediate Panel
	4	6'-10½	7'-1	7'-3
	5	8'-6	8'-8½	8'-10½
	6	10'-1½	10'-4	10'-6
4 End Panels 38 Intermediate Panels	* 7	11'-9	11'-11½	12'-1½
	8	13'-4½	13'-7	13'-9

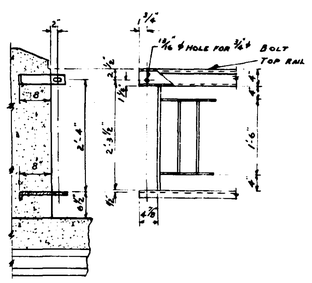

SECTION B-B

Scale 3/4"=1'-0

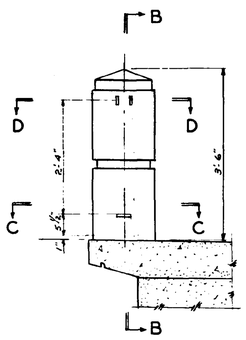

SECTION A-A

Scale 3/4"=1'-0

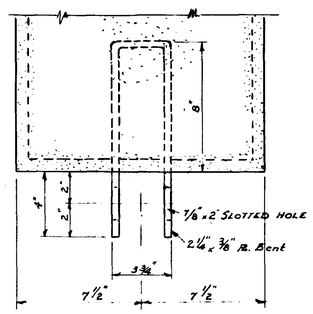

SECTION D-D

Scale 3"=1'-0

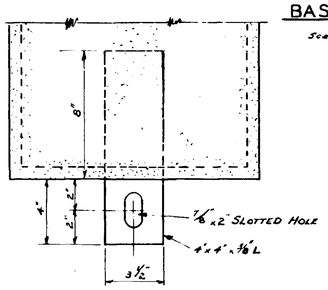

SECTION C-C

Scale 3"=1'-0

REVISIONS	DATE

DEPARTMENT OF PUBLIC WORKS
CANADA
DEVELOPMENT ENGINEERING BRANCH
STRUCTURES DIVISION

OTTERTAIL RIVER BRIDGE

YOHO NATIONAL PARK B.C. Mi 12.9

STANDARD HANDRAIL DETAIL

JOB SUPERVISOR J.C.BEAUCHAMP	DESIGN H.V.E
APPROVED DATE 23/4/56	DRAWN J.A.M.
W.S. Thompson.	CHECKED J.C.B.
CHIEF STRUCTURES DIVISION	PROJECT NO. NP 9-33-29
APPROVED DATE 23.4.56	SHEET 6 OF 6
E. Stehmann.	
CHIEF ENGINEER	

6

X30