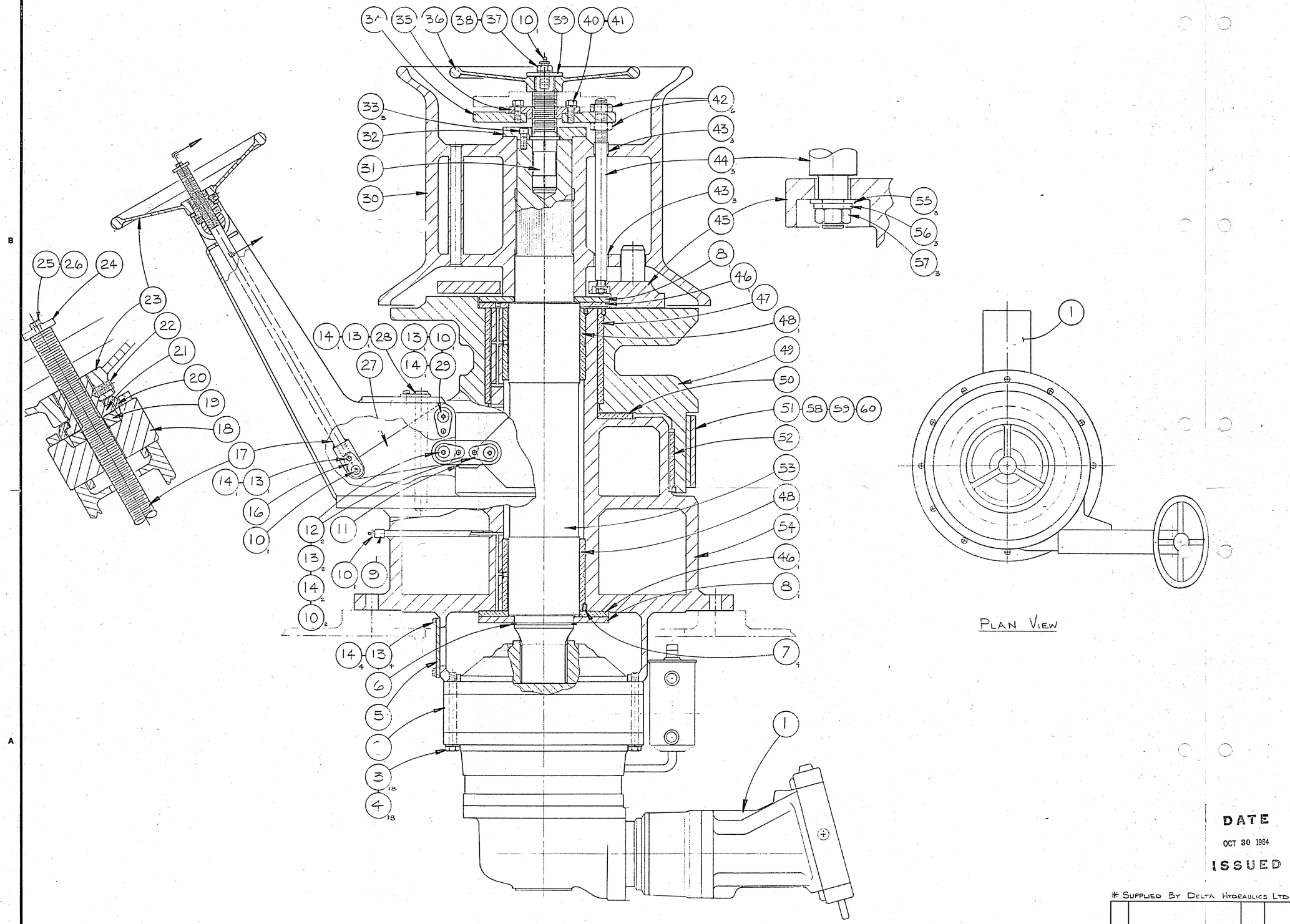

PLAN VIEW

ITEM NO.	QTY	PART NO.	DESCRIPTION
75			
74			
73			
72			
71			
70			
69			
68			
67			
66			
65			
64			
63			
62			
61			
60	3	600585	LOCKWASHER MED. ½"φ
59	3	600357	HEX. NUT. REG. ½"φ UNC GR 5
58	3	600816	HEX. HD. CAPSCREW ½"φ UNC x 2"L GR 5
57	3	601474	FLATWASHER 7/16"φ SS316
56	3	601473	LOCKWASHER 7/16"φ SS316
55	3	601475	HEX. NUT 7/16" UNC SS316
54	1	401172	WINDLASS BASE (STARBOARD)
53	1	401180	SHAFT
52	1	200826	BUSHING - BRONZE
51	1	401183	BRAKE BAND ASS'Y
50	1	200825	WASHER - THRUST BRONZE
49	1	401176	WILDCAT
48	1	200823	BUSHING - BRONZE
47	1	200824	BUSHING - BRONZE
46	2	100557	WASHER THRUST
45	1	401181	CLUTCH DOG ASS'Y
44	3	200822	LIFTING ROD
43	6	601247	BEARING SLEEVE RULON
42	6	601476	HEX. JAM NUT 1"φ UNC SS316
41	6	601250	LOCKWASHER ½"φ SS316
40	6	601290	HEX. HD. CAPSCREW ½"φ UNC x 1¼"L SS316
39	1	100555	WASHER
38	1	601255	LOCKWASHER ¾"φ - SS316
37	1	100316	CAPSCREW SPECIAL
36	1	401182	HANDWHEEL CLUTCH
35	1	200820	CLUTCH SCREW ADAPTER
34	1	200821	PLATE - CLUTCH SCREW ADAPTER
33	3	601321	SOCKET HD. CAPSCREW ½"φ UNC x 1¾"L SS316
32	1	200827	CAP
31	1	200819	CLUTCH SCREW
30	1	401178	WARPING HEAD 20"φ
29	1	200836	PIN ASSEMBLY
28	1	200837	PIN ASSEMBLY.
27	1	200831	LEVER ASS'Y
26	1	601478	HEX. HD. CAPSCREW ¼"φ UNC x 1"L SS316
25	1	601477	LOCKWASHER ¼"φ SS316
24	1	100558	WASHER
23	1	401184	HANDWHEEL - BRAKE
22	1	601460	SETSCREW - KNURLED CUP PT. ⅜"φ UNC x ½"L
21	1	200840	SCREW BUSHING
20	1	200842	PIVOT BRACKET - BRAKE
19	1	100559	WASHER THRUST
18	1	200841	TRUNNION
17	1	200844	BRAKE SCREW ROD ASS'Y
16	1	200838	PIN ASSEMBLY
15			
14	9	601253	LOCKWASHER ⅜"φ SS316
13	9	601289	HEX. HD. CAPSCREW ⅜"φ UNC x 1"L SS316
12	2	200834	PIN ASSEMBLY
11	1	200829	LINK ASSEMBLY
10	6	601472	GREASE NIPPLE - SHORT STGHT. ⅛" NPT SS316
9	1	601480	REDUCER COUPLING ⅛" NPT - ¼" NPT SS316
8	2	100556	WASHER THRUST
7	4	601481	KNURLED CUP PT. SOCK. SET SCREW ¼"φ UNC x ⅝"L
6	1	601425	SNAP RING
5	1	200848	COVER - INSPECTION
4	18	601479	HEX. HD. CAPSCREW ⅝"φ UNC x 6¼"L GR. 5
3	18	600586	LOCKWASHER MED. ⅝"φ
* 2	1		GEAR REDUCER
* 1	1		HYD. MOTOR

401170

DATE
OCT 30 1984
ISSUED

* SUPPLIED BY DELTA HYDRAULICS LTD.

REV	ALTERATION	BY	DATE

DO NOT SCALE
TOLERANCES UNLESS OTHERWISE SPECIFIED
.XX: ± .030
.XXX: ± .010
MACHINED FINISH 125

LANTEC INDUSTRIES LTD.
LANGLEY, B.C. CANADA

VERTICAL WINDLASS
MODEL 8000

DRN	BY	DATE	84-09-13	401170	REV
APP		SCALE	N/A		

STARBOARD