Public Works and Government Services Canada | Travaux publics et Services gouvernementaux Canada

RETURN BIDS TO:
RETOURNER LES SOUMISSIONS À:

Travaux publics et Services gouvernementaux Canada
Place Bonaventure,
800 rue de la Gauchetière Ouest
Voir aux présentes - See herein
Montréal
Québec
H5A 1L6
FAX pour soumissions: (514) 496-3822

SOLICITATION AMENDMENT
MODIFICATION DE L'INVITATION

The referenced document is hereby revised; unless otherwise indicated, all other terms and conditions of the Solicitation remain the same.

Ce document est par la présente révisé; sauf indication contraire, les modalités de l'invitation demeurent les mêmes.

Comments - Commentaires

Title - Sujet Terminal building upgrade Sablon	
Solicitation No. - N° de l'invitation EF997-180106/A	**Amendment No. - N° modif.** 002
Client Reference No. - N° de référence du client R.075371.001	**Date** 2017-06-02
GETS Reference No. - N° de référence de SEAG PW-$MTC-560-14348	
File No. - N° de dossier MTC-7-40026 (560)	**CCC No./N° CCC - FMS No./N° VME**
Solicitation Closes - L'invitation prend fin **at - à 02:00 PM** **on - le 2017-06-13**	**Time Zone** **Fuseau horaire** Heure Avancée de l'Est HAE
F.O.B. - F.A.B. **Plant-Usine:** ☐ **Destination:** ☑ **Other-Autre:** ☐	
Address Enquiries to: - Adresser toutes questions à: Ghali, Camille	**Buyer Id - Id de l'acheteur** mtc560
Telephone No. - N° de téléphone (514) 496-3871 ( )	**FAX No. - N° de FAX** ( ) -
Destination - of Goods, Services, and Construction: **Destination - des biens, services et construction:**	

Vendor/Firm Name and Address
Raison sociale et adresse du fournisseur/de l'entrepreneur

Instructions: See Herein

Instructions: Voir aux présentes

Delivery Required - Livraison exigée	**Delivery Offered - Livraison proposée**
Vendor/Firm Name and Address **Raison sociale et adresse du fournisseur/de l'entrepreneur** **Telephone No. - N° de téléphone** **Facsimile No. - N° de télécopieur**	
Name and title of person authorized to sign on behalf of Vendor/Firm (type or print) **Nom et titre de la personne autorisée à signer au nom du fournisseur/ de l'entrepreneur (taper ou écrire en caractères d'imprimerie)** **Signature**	**Date**

Issuing Office - Bureau de distribution

Travaux publics et Services gouvernementaux Canada
Place Bonaventure,
800 rue de la Gauchetière Ouest
Voir aux présentes - See herein
Montréal
Québec
H5A 1L6

Canada

AMENDMENT No. 2

This amendment aims to answer some questions received during the call for tender and to include Addendum No.1.

- **All other terms and conditions remain unchanged –**

PROPRIÉTAIRE	:	TRAVAUX PUBLICS ET SERVICES GOUVERNEMENTAUX CANADA-TPSGC/PUBLIC WORKS AND GOVERNMENT SERVICES CANADA-PWGSC
PROJET	:	MISE AUX NORMES DE L'AÉROGARE/*AIR TERMINAL REPAIR AND UPGRADE* AÉROPORT DE BLANC-SABLON/*BLANC-SABLON AIRPORT*
DOSSIER	:	R.075371.001
SPÉCIALITÉ	:	MÉCANIQUE-ÉLECTRICITÉ/*MECHANICAL-ELECTRICITY*
ADDENDA N^{O}	:	1
DATE	:	30 MAI 2017

ADDENDA

ÉLECTRICITÉ-/*ÉLECTRICITY*

1- Feuille E003/*Sheet E003*

- Panneau de distribution PA-2 – le circuit 56 est ajouté, fournir un disjoncteur de 15 ampères. Changer le calibre du disjoncteur du circuit 48 pour un disjoncteur de 25 ampères./*Distribution panel PA-2 –braker 56 is added, provide a 15 amperes breaker. Change breaker 15 A for a brakers of 25 A to circuit 48.*

2- Feuille E006/*Sheet E006*

- Deux prises de courants sont ajoutées. Voir croquis ci-joint */Two duplex electrical outlet added. See sketch attached.*

- Démanteler l'alimentation électrique du ventilateur situé dans le plafond en face du local no. 3. Voir croquis ci-joint/ *Dismantle electricical connection of fan in the ceiling near room no. 3.See sketch attached.*

3- Feuille E007/*Sheet E007*

- L'alimentation électrique du ventilateur existant localisé dans l'entre plafond près de la pièce no. 3 est à démanteler en totalité.Voir croquis ci-joint. / *Dismantle electrical connection of existing fan in the ceiling near room number 3 .See sketch attached.*

- La puissance des ventilateur VE-2 et VE-3 est modifiée.Voir croquis ci-joint/ *The power of VE-2 and VE-3 is changed. See sketch attached.*

4-* Feuille E008/*Sheet E008

- Annuler les démarreurs pour les ventilateurs VE-2 et VE-3./*Cancel starters of VE-2 et VE-3.*

MÉCANIQUE

1- Devis mécanique/Mechanical specification

- Les sections suivantes en anglais sont ajoutées : */ The following english sections are added :*
  - 23 11 13
  - 23 21 13.02
  - 23 21 23

2- Feuille M07/*Sheet M07*

- Le ventilateur existant localisé dans l'entre plafond près de la pièce no. 3 est à démanteler en totalité, ventilateur et conduit./ *Dismantle existing fan in the ceiling near room number 3 (fan and ducts)*

- *Les spécifications du ventilateur VE-2 sont modifiées. Voir croquis ci-joint/ VE-2 spécification are changed. See drawing attached.*

3- Feuille M09/*Sheet M09*

- *Des modifications sont apportées au diagramme de contrôle et à la séquence d'opération.Voir croquis ci-joint/Modifications to régulation diagram and opération sequence. See drawing attached.*

Loraine Lussier, ing.

Loraine Lussier, ing.

NOTE : LE PRÉSENT ADDENDA FAIT PARTIE INTÉGRANTE DES DOCUMENTS DE SOUMISSION. L'ENTREPRENEUR DOIT EN CONSÉQUENCE L'IDENTIFIER À LA SECTION ADDENDA DU FORMULAIRE DE SOUMISSION.

THIS ADDENDUM IS AN INTEGRAL PART OF BIDDING DOCUMENT. THE CONTRACTOR MUST IDENTIFY THIS ONE ON THE SUBMISSION FORM

1. GENERAL

1.1 REFERENCES

1.1.1 American Society of Mechanical Engineers (ASME)

1.1.1.1 ASME-B16.3, Malleable-Iron Threaded Fittings.

1.1.1.2 ASME-B16.9, Factory-Made Wrought Steel Buttwelding Fittings.

1.1.2 American Society for Testing and Materials International (ASTM)

1.1.2.1 ASTM A 47/A 47M, Standard Specification for Ferritic Malleable Iron Castings.

1.1.2.2 ASTM A 53/A 53M, Standard Specification for Pipe, Steel, Black and Hot-Dipped, Zinc Coated, Welded and Seamless.

1.1.2.3 ASTM B 61, Standard Specification for Steam or Valve Bronze Castings.

1.1.2.4 ASTM B 75M, Standard Specification for Seamless Copper Tube.

1.1.2.5 ASTM A120, Specification for Pipe, Steel, Black and Hot-Dipped, Zinc Coated (Galvanized) Welded and Seamless, for Ordinary Uses.

1.1.3 Canadian Environmental Protection Act (CEPA)

1.1.3.1 CCME PN 1326, Environmental Code of Practice for Aboveground and Underground Storage Tank Systems for Petroleum Products and Allied Petroleum Products.

1.1.4 Canadian Standards Association (CSA)/CSA International

1.1.4.1 CSA-B139, Installation Code for Oil Burning Equipment.

1.1.4.2 CSA-B140.0, Oil Burning Equipment: General Requirements.

1.1.4.3 MSS-SP-80, Bronze Gate, Globe, Angle and Check Valves.

1.1.5 Health Canada / Workplace Hazardous Materials Information System (WHMIS)

1.1.5.1 Material Safety Data Sheets (MSDS).

1.1.6 Manufacturers Standardization Society of the Valve and Fitting Industry (MSS)

1.1.6.1 MSS-SP-80, Bronze Gate, Globe, Angle and Check Valves.

1.2 DOCUMENTS/SAMPLES FOR SUBMITTAL DURING THE COMPLETION OF THE WORK

1.2.1 Submit required the documents and samples in accordance with section 21 05 01.

1.2.2 Technical data sheets

1.2.2.1 Provide manufacturer's printed product literature, specifications and datasheets for piping, fittings and equipment. Indicate VOC's for adhesive and solvents during application and curing.

1.2.2.2 The data sheets shall indicate the characteristics of the products, performance criteria, dimensions, limits and finish.

1.2.2.2.1 Identify the elements referred to in the documentation provided by the manufacturer.

1.2.3 Certificates: submit certificates signed by manufacturer certifying that materials comply with specified performance characteristics and physical properties.

1.2.4 Instructions: provide manufacturer's installation instructions.

1.2.5 Test reports: submit certified test reports from approved independent testing laboratories indicating compliance with specifications for specified performance characteristics and physical properties.

1.2.6 Documents/elements to submit during the completion of work:

1.2.6.1 Provide the required operating, maintenance and spare parts and enclose them to the manual referred to in section 21 05 01.

Maintenance records must indicate or include the following:

1.2.6.1.1 Manufacturer's name, type, year of manufacturing, the output or power and serial number of equipment;

1.2.6.1.2 Details of operation and maintenance.

1.2.6.2 Provide the on-site signed control reports of on-site carried out by the contractor relating to the monitoring of the installation and start-up. Advise the Departmental Representative at least 48 hours before proceeding with the start-up.

1.3 QUALITY ASSURANCE

1.3.1 Reliability of technical data

1.3.1.1 Technical data taken from the manufacturer's documentation shall be reliable data, confirmed by tests carried out by the manufacturer's themselves or on their behalf by independent laboratories and certifying the conformity of the elements with the requirements of the Codes and Standards.

2. PRODUCTS

2.1 SUSTAINABLE MATERIALS AND PRODUCTS

2.1.1 Sustainable development requirements: materials, products in accordance with section 21 05 01 – General requirements.

2.1.2 Sustainable development requirements: materials, products in accordance with section 21 05 01.

2.1.3 Adhesives and sealants: in accordance with 21 05 01. Use the least toxic sealants, adhesives, printing and finishing products that meet the requirements of the work.

2.1.3.1 VOC content in which adhesives and sealants are to be less than that specified in the Green Seal GS-36 standard and SCAQMD Regulation 1168.

2.2 FILL, VENT AND CARRIER PIPE

2.2.1 Aboveground piping

2.2.1.1 Steel: to ASTM A 53/A53M standard, schedule 40, continuous weld or electric resistance welded, screwed.

2.3 STEEL PIPE COATING

2.3.1 Primer and paint: in accordance with the manufacturer's recommendations.

2.4 JOINTS

2.4.1 Screwed fittings: Teflon tape or pulverized lead paste in accordance to CAN/ULC-S642 standards.

2.5 FITTINGS

2.5.1 Steel piping

2.5.1.1 Malleable iron: screwed, banded, Class 150 to ASME-B16.3.

2.5.1.2 Welding: butt-welding to ASME-B16.9.

2.5.1.3 Unions: malleable iron, brass to iron, ground seat, screwed, to ASTM A 47/A 47M.

2.5.1.4 Nipples: Schedule 40, to ASTM A 53/A 53M.

2.6 GLOBE VALVES

2.6.1 Globe valves of an equal nominal diameter or inferior to NPS 2.

2.6.1.1 Bronze body, screwed ends, TFE seal, hard chrome ball shutter, class 125, UL approved.

2.7 SWING RETAINING VALVES

2.7.1 Valves of equal nominal diameter or inferior to NPS 2, screwed.

2.7.1.1 Valves in accordance to MSS-SP-80 standard, class 300, category 2 070 kPa, bronze body, bronze swing sutter, screw in cap, regrindable seat.

2.8 FLEXIBLE PIPING

2.8.1 ULC approved flexible piping, made of stainless steel wire mesh, DN 19 po ø à 80 mm ø.

2.8.2 Operating pressure : 150 psi.

2.8.3 Maximum pressure : 600 psi.

2.9 VENTING CAP

2.9.1 Vents open to the atmosphere, with mesh screen and cap to protect against debris, insects and water intrusion.

3. <u>EXECUTION</u>

3.1 MANUFACTURER'S INSTRUCITONS

3.1.1 Compliance: comply with manufacturer's written recommendations, including product technical bulletins, handling, storage and installation instructions, and datasheets.

3.2 PIPING

3.2.1 Use fittings in accordance with l'ANSI standard for piping assembly.

3.2.2 Install oil piping system in accordance with CAN/CSA-B139, CAN/CSA-B140.0 standard and to Construction Code Chapter VIII – Oil equipment installation.

3.2.3 Slope piping down in direction of storage tank unless otherwise indicated.

3.2.4 Use eccentric reducers to connect pipes of different diameters, oriented so as to ensure the free drainage of the liquid.

3.2.5 Allow sufficient clearance to permit access to equipment, valves and fittings and their maintenance.

3.2.6 Trim pipe ends, descaling and cleaning both inside and outside.

3.2.7 Piping inside building :

3.2.7.1 Use steel assembled pipes by means of scew fittings.

3.2.8 Fill, vent, suction piping outside building:

3.2.8.1 Connect piping by welding.

3.2.8.2 Slope piping at 1 % back to the tanks.

3.2.9 Piping at tanks

3.2.9.1 Fill pipes: bring the piping to the indicated height and provide to the extremity a liquid and gas tight female plug with chain and padlock.

3.3 VALVES

3.3.1 Install valves with stems upright or horizontal unless approved otherwise by the Minister's representative.

3.3.2 Install gate ball valves at branch take-offs, to isolate pieces of equipment and as indicated.

3.3.3 Install globe valves for balancing and in by-pass around control valves.

3.3.4 Install swing retaining valves on discharge of pumps and as indicated.

3.3.5 Install ball valves where indicated.

3.4 FIELD QUALITY CONTROL

3.4.1 Site Tests/Inspection

3.4.1.1 Test system to CSA-B139 and CSA-B140.0 and authorities having jurisdiction.

3.4.1.2 Isolate tanks from piping pressure tests.

3.4.1.3 Maintain test pressure during backfilling.

3.4.2 The expense for the petroleum products inspector shall be at the contractor's charge.

3.5 CLEANING

3.5.1 Carry out the cleaning and commissioning of the network in accordance with the requirements of this section and the CSA-B139 standard.

3.5.2 Flush after pressure test with # 1 #2 fuel oil for a minimum of two hours. Clean strainers and filters.

3.5.3 Dispose of fuel oil used for flushing out in accordance with requirements of authority having jurisdiction.

3.5.4 Ensure vents from regulators, control valves are terminated in approved location and are protected against blockage and damage.

3.5.5 Ensure that the network is approved by authority having jurisdiction.

3.6 STEEL PIPE COATING

3.6.1 Coat the pipes with primer and two (2) paint coatings.

END OF SECTION

1. GENERAL

1.1 REFERENCES

1.1.1 Canadian Standards Association (CSA)

1.1.1.1 CSA W47.1, Certification of fusion welding companies of steel structures, last edition.

1.1.1.2 CSA W47.1S1, to standard CSA W47.1, Certification of fusion welding companies of steel structures, last edition.

1.1.2 American National Standards Institute (ANSI)

1.1.2.1 ANSI/ASME B16.1, Cast Iron Pipe Flanges and Flanged Fittings, Class 25, 125, 250 and 800, last edition.

1.1.2.2 ANSI/ASME B16.3, Malleable-Iron Threaded Fittings, Classes 150 and 300, last edition.

1.1.2.3 ANSI/ASME B16.5, Pipe Flanges and Flanged Fittings, Steel Nickel Alloy and other Special Alloys, last edition.

1.1.2.4 ANSI/ASME B16.9, Factory-Made Wrought Steel Buttwelding Fittings, last edition.

1.1.2.5 ANSI B18.2.1, Square and Hex Bolts and Screws, last edition.

1.1.2.6 ANSI/ASME B18.2.2, Square and Hex Nuts, last edition.

1.1.2.7 ANSI/AWWA C111/A21.11, Rubber Gasket Joints for Ductile-Iron and Gray-Iron Pressure Pipe and Fittings, last edition.

1.1.3 American Society for Testing and Material

1.1.3.1 ASTM A 47M, Specification for Ferritic Malleable Iron Castings, last edition.

1.1.3.2 ASTM A 53, Specification for Pipe, Steel, Black and Hot-Dipped, Zinc Coated, Welded and Seamless, last edition.

1.1.3.3 ASTM A 536, Specification for Ductile Iron Castings, last edition.

1.1.3.4 ASTM B 61, Specification for Steam or Valve Bronze Castings, last edition.

1.1.3.5 ASTM B 62, Specification for Composition Bronze or Ounce Metal Castings, last edition.

1.1.3.6 ASTM E 202, Test Method for Analysis of Ethylene Glycols and Propylene Glycols, last edition.

1.1.4 Manufacturers Standardization Society of the Valve and Fittings Industry, Inc. (MSS)

1.1.4.1 MSS-SP-67, Butterfly Valves, last edition.

1.1.4.2 MSS-SP-70, Cast Iron Gate Valves, Flanged and Threaded Ends, last edition.

1.1.4.3 MSS-SP-71, Cast Iron Swing Check Valves, Flanged and Threaded Ends, last edition.

1.1.4.4 MSS-SP-80, Bronze Gate, Globe, Angle and Check Valves, last edition.

1.1.4.5 MSS-SP-85, Cast Iron Globe and Angle Valves, Flanged and Threaded Ends, last edition.

1.2 SHOP DRAWINGS

1.2.1 Submit the required shop drawings in accordance with the general requirements of 21 05 01.

1.3 ACTION AND INFORMATIONAL SUBMITTALS

1.3.1 Provide maintenance data for incorporation into manual specified in section 21 05 01.

1.4 SPARE MATERIAL

1.4.1 Provide the following spare parts:

1.4.1.1 Valve seats: one seat for every ten fittings installed for each diameter provided, but at least one in all cases.

1.4.1.2 Discs and seals: one sealing element for ten installed valve fittings, for each diameter provided, but at least one in all cases.

1.4.1.3 Stem packings (for rods): one fitting for every ten fittings installed for each diameter provided but at least one in all cases.

1.4.1.4 Joysticks / Steering Wheels: Two of each size.

1.4.1.5 Flange gaskets: one gasket for ten flanges installed.

2. PRODUCTS

2.1 PIPE

2.1.1 Steel pipe: to ASTM A53/A53M, Grade B, as follows:

2.1.1.1 Up to DN 150: Schedule 40.

2.2 PIPE JOINTS

2.2.1 Above ground piping

2.2.1.1 Pipes with diameter equal to or smaller than DN 2'': threaded connections with Teflon tape or sealing compound based on lead white.

2.2.1.2 Pipes with diameters equal to or greater than DN 2 1½'': fittings and solder flanges, according to CSA W47.1 and CSA W47.1S1.

2.2.1.3 Flanges: plain or raised face, slip-on weld neck.

2.2.1.4 Orifice flanges: slip-on raised face, 2100 kPa.

2.2.1.5 Flange fittings: according to the standard ANSI/AWWA C111/A21.11.

2.2.1.6 Thread: Taper.

2.2.1.7 Bolts and nuts: to ASME B18.2.1 and ASME B18.2.2.

2.3 FITTINGS

2.3.1 Screwed fittings: ductile iron, to ANSI/ASME B16.3, class 150.

2.3.2 Pipe flanges and flanged fittings

2.3.2.1 Cast iron: to ANSI/ASME B16.1, class 150.

2.3.2.2 Steel: to ANSI/ASME B16.5.

2.3.3 Butt-welding fittings: steel, to ANSI/ASME B16.9.

2.3.4 Unions: ductile iron, to ASTM A 47M et ANSI/ASME B16.3, class 150.

2.4 VALVES

2.4.1 Screw-in fittings: Teflon tape or lead-based sealing paste conforming to standard CAN/ULC-S642.

2.4.2 Ball valves: used for isolation of devices, control / regulation, on large diameter pipes.

2.4.2.1 Valves of equal or smaller diameter than DN 2 with screw ends.

2.4.2.1.1 For installation in mechanical rooms.

2.4.2.1.2 To be installed elsewhere than in mechanical rooms.

2.4.2.1.3 Bronze body, chromed brass ball valve, adjustable PTFE teflon seal, brass seal, PTFE teflon seat, steel lever and screw ends.

2.5 SWING CHECK VALVE

2.5.1 Valves of diameter equal to or smaller than DN 2'', to be screwed

2.5.1.1 Conforms to MSS SP 80, class 125, category 860 kPa, bronze body, flap (shutter), bronze, threaded and screwed cap, rectifiable seat.

2.6 SILENT CHECK VALVE

2.6.1 Valves of diameter equal to or less than DN 2''

2.6.1.1 According to ASTM B62, class 125, category 860 kPa, cast iron body, without flange ("sandwich"), bronze internal part, stainless steel spring (extra strong spring for mounting on vertical pipes With descending and ascending flow).

2.7 BALANCING VALVES

2.7.1 Valve DN 2 "and less:

2.7.1.1 Bronze body, internal part in armatron, bronze rod, pre-molded insulation, screwed joints, with lockable adjustment points and measuring fittings.

2.7.1.1.1 Specification: Armstrong, model Nº CBV-T.

2.7.1.2 Amber body, operating pressure of 2069 kPa at a temperature of 121 °C, threaded joints and taps with inclined-body valve.

2.7.1.2.1 To facilitate adjustment, the read ports and handle must be positioned on the same side and ¼ "NPT drains on each side of the seat for connection of the measuring instrument. Equipped with an integral digital system for direct reading. For locations and dimensions see drawings.

2.7.1.2.2 Acceptable product: Tour & Anderson.

3. <u>EXECUTION</u>

3.1 PIPING INSTALLATION

3.1.1 Unless otherwise indicated, connect the piping to the equipment and equipment in accordance with the manufacturer's instructions.

3.1.2 Install hidden piping close to the building framing, to maximize the space in the room. Install exposed piping parallel to the walls. Group pipes as much as possible.

3.1.3 Tilt the piping towards the exhaust point and ensure good ventilation of the system.

3.1.4 Use eccentric reducers to connect pipes of different diameters and orient them to ensure easy evacuation of the fluid carried and a good ventilation of the network.

3.1.5 Provide adequate clearance for the installation of insulation, and allow access for maintenance purposes to appliances, valves and fittings.

3.1.6 Prior to installation, trim pipes ends and remove slag and dust, both indoors and outdoors; Clean them also after the installation is complete.

3.1.7 Assemble pipes using fittings manufactured in accordance with relevant ANSI standards.

3.1.8 Saddle-type sockets to be welded may be used on main pipelines if the bypass diameter is equal to or less than half that of the main pipeline. Before welding the plug, drill the hole on the main pipe with a saw or a drill and then drill it in order to retain its full internal diameter.

3.2 FAUCET INSTALLATION

3.2.1 Install the ball valves so that they are placed vertically, upward and the handle accessible.

3.2.2 Install ball valves at each branch point, upstream of each installed unit, in order to be able to isolate them as required and at the other locations indicated.

3.2.3 According to the instructions, install balancing valves for the main balancing of the network, and install them on control/regulation valves bypass.

3.2.4 Install silent check valves on vertical downflow lines and other indicated locations.

3.2.5 Install swing check valves on the horizontal lines, on the pump discharge line and at the indicated locations.

3.2.6 Provide chain-operated valves with valves of DN 2 ½'' or more installed at a height of more than 2400 mm above the floor in mechanical rooms.

3.2.7 Provide tapered or spherical ball valves for glycol systems.

3.3 INSTALLATION OF BALANCING VALVES

3.3.1 Install measuring stations and flow control valves as indicated.

3.3.2 Remove the handwheel from the valves after installation and after the balancing operations have been completed.

3.3.3 Install tape on each of the prefabricated heat insulation seals on the refrigerated piping valves.

3.4 CLEANING AND FLUSHING

3.4.1 Remove loose slag, sand and dirt from the inside of the piping.

3.4.2 Perform the cleaning and remove all foreign substance and dirt from equipment, piping and other prior to installation or incorporation into work.

3.4.3 When it is necessary to clean the pre-assembled piping using special mechanical tools, such as compressor suction pipes, drawings will indicate so.

3.4.4 In order to ensure that all mechanically cleaned piping remains clean during shipping and / or storage, seal and block off all openings as follows:

3.4.4.1 With flat 3 mm thick neoprene inserts and a plywood cover bolted together when the flanges have 4 holes and bolted to 50% when the flanges have 8 holes or more.

3.4.4.2 Seal threaded/welded connections, plain ends and butt welding using plastic plugs or caps.

3.4.5 For tender purposes, the exact quantity of water shall be determined by the Contractor.

3.4.6 It should be noted that before adding to the system the quantity of chemicals required, the exact amount of water in the system must be determined with a meter. In addition, degreasing must be done only when the entire piping system is ready for operation on a permanent basis.

3.4.7 All equipment, temporary sieves, labor, pumps, tanks, chemicals, equipment, meters, accessories required for washing and degreasing systems shall be provided by the contractor of that specialty.

3.4.8 Flush all water systems with sufficient water flow to achieve a speed of 2 meters per second. Maintain this flow rate for 15 minutes or more until all dirt is completely removed from the system.

3.4.9 The pipe shall be thoroughly cleaned of all debris and left perfectly clean. For inspection purposes the contractor must empty it completely.

3.4.10 During rinsing, collect all sediment from the pipes using a temporary sieve during suction by the pumps. Protect the pump during operation by maintaining recommended minimum NPSH.

3.4.11 Complete rinsing before installing control valves and special devices.

3.5 FILLING SYSTEM

3.5.1 Fill the system with clean water or glycol and add treatment products according to instructions.

3.6 TESTING

3.6.1 Test system in accordance with section 21 05 01.

3.6.2 For glycol systems, retest with ethylene/glycol to ASTM E 202, inhibited, for use in building system after cleaning. Repair leaking joints, fittings or valves.

3.7 WATER TREATMET

3.7.1 Closed circuits of hot and cooled water

3.7.1.1 Following the cleaning, the hot water circulation networks shall be protected by a corrosion inhibitor. The product used as a corrosion inhibitor is Betz-Dearborn (Corrshield K-77), a molybdate-based liquid product.

3.7.1.2 The initial dosage of this product is 1 liter per 1000 liters of capacity.

3.7.1.3 An inhibitor concentration verification will be carried out using the NºTK-470 test kit to obtain a molybdate concentration of between 500 and 600 parts per million, this kit will be returned to the owner.

3.7.1.4 This operation shall be accompanied by sampling and analysis by the chemical supplier's laboratory; a report will be given to the owner.

3.8 BALANCING

3.8.1 Balance water systems to within plus or minus 5% of design output.

3.8.2 Refer to Section 23 05 93 ERE for applicable procedures.

3.9 GLYCOL CHARGING

3.9.1 Provide mixing tank and positive displacement pump for glycol charging.

3.9.2 Retest for concentration to ASTM E 202 after cleaning.

3.9.3 Provide a report to the engineer.

3.9.4 Specification: "MAG" brand propylene or ethylene glycol solution of MAG Québec Inc. Laboratory, 50% concentration or equivalent approved.

3.9.4.1 The contractor shall validate with the Departmental Representative the brand of propylene or ethylene glycol with the concentration installed in those systems.

END OF SECTION

1. GENERAL

1.1 REFERENCES

1.1.1 American Society of Heating Refrigeration and Air-Conditioning Engineers (ASHRAE).

1.1.1.1 Standard 90.1-2001, Energy Standard for Buildings Except Low-Rise Residential Buildings.

1.1.2 Electrical Equipment Manufacturers Advisory Council (EEMAC).

1.1.3 Canadian Standard Association (CSA International).

1.1.3.1 CAN/CSA-B214, last edition, Installation Code for Hydronic Heating Systems.

1.1.4 National Electrical Manufacturers Association (NEMA).

1.1.4.1 NEMA MG 1, last edition, Motors and Generators.

1.2 ACTION AND INFORMATIONAL SUBMITTALS

1.2.1 Provide submittals in accordance with section 21 05 01.

1.2.2 Provide product data and shop drawings in accordance with section 21 05 01.

1.2.3 Submit the detailed wiring diagrams of the control systems, established by the manufacturer, showing the wiring and equipment installed at the factory on monobloc devices or required for control devices, auxiliary equipment, accessory parts, controllers and controllers.

1.2.4 Submit, for verification purposes, the characteristic curves of the pumps, which shall indicate the point of operation.

1.2.5 The shop drawings shall indicate the final location of the piping, valves and fittings shipped separately by the equipment supplier.

1.2.6 Provide the required maintenance data sheets and join them to the manual referred to in section 21 05 01.

1.3 WASTE MANAGEMENT AND DISPOSAL

1.3.1 Sort waste for reuse and recycling.

1.3.2 Evacuate all packaging materials from the site and transport them to appropriate recycling facilities.

1.3.3 Recover and sort paper, plastic, polystyrene and corrugated cardboard packages and place them in appropriate waste bins disposed on site for recycling in accordance with the waste management plan.

1.3.4 Sort steel, metal and plastic wastes for reuse and recycling and place in designated containers in accordance with the waste management plan.

1.3.5 Fold metal strapping straps, flatten them and place them in designated areas for recycling.

1.4 REMPLACEMENT MATERIALS

1.4.1 Provide the maintenance / replacement materials required in accordance with section 21 05 01.

2. PRODUCTS

2.1 HOT WATER PUMP

2.1.1 See specifications on plans.

3. EXECUTION

3.1 INSTALLATION

3.1.1 Install pumps in accordance with CAN/CSA-B214.

3.1.2 In line circulation pumps mounted directly on the piping: mount the pumps so that the fluid circulates in the direction indicated by the arrow engraved; Install support elements to flanges or suction and discharge connections and ensure lubrication points are accessible.

3.1.3 Base mounted type pump: Provide templates for location of anchor bolts, as well as anchor bolts and sleeves; Install the level pumps and, for this purpose, install the necessary shims and seal the pumps with the mortar grout; Align the couplings to the manufacturer's recommended tolerances and check oil level and lubricate the pumps before starting them. Once the lapping has been completed, tighten glands.

3.1.4 Provide stanchions or hangers to ensure that pump body does not support piping or equipment. Refer to manufacturer's installation instructions for details.

3.1.5 Pipe drain tapping to floor drain.

3.1.6 Install volute venting pet cock in accessible location.

3.1.7 Check rotation prior to start-up.

3.1.8 Install pressure gauge test cocks.

3.2 START-UP

3.2.1 General

3.2.1.1 In accordance with manufacturer's recommendations.

3.2.2 Procedure

3.2.2.1 Before starting pump, check that cooling water system over-temperature and other protective devices are installed and operative.

3.2.2.2 After starting pump, check for proper, safe operation.

3.2.2.3 Check installation, operation of mechanical seals, packing gland type seals. Adjust as necessary.

3.2.2.4 Check base for free-floating, no obstructions under base.

3.2.2.5 Run-in pumps for 12 continuous hours minimum.

3.2.2.6 Verify operation of over-temperature and other protective devices under low- and no-flow condition.

3.2.2.7 Eliminate air from scroll casing.

3.2.2.8 Adjust water flow rate through water-cooled bearings.

3.2.2.9 Adjust flow rate from pump shaft stuffing boxes to manufacturer's recommendation.

3.2.2.10 Adjust alignment of piping and conduit to ensure true flexibility.

3.2.2.11 Eliminate cavitation, flashing and air entrainment.

3.2.2.12 Adjust pump shaft seals, stuffing boxes, glands.

3.2.2.13 Measure pressure drop across strainer when clean and with flow rates as finally set.

3.2.2.14 Replace seals if pump used to degrease system or if pump used for temporary heat.

3.2.2.15 Verify lubricating oil levels.

3.3 PERFORMANCE VERIFICATION

3.3.1 General

3.3.1.1 Sustainable development requirements for control shall include the following.

3.3.1.1.1 Materials and Resources.

3.3.1.1.2 Low-Emitting Materials and Equipment.

3.3.1.2 According to the manufacturer's recommendations.

3.3.2 Excluded elements

3.3.2.1 The following paragraph does not apply to small circulating pumps mounted directly on the piping.

3.3.3 At time of performance control, we suppose :

3.3.3.1 that manufacturer's performance curves are accurate;

3.3.3.2 that valves on pump suction and discharge provide tight shut-off.

3.3.4 Net Positive Suction Head (NPSH)

3.3.4.1 Application: measure NPSH for pumps which operate on open systems and with water at elevated temperatures.

3.3.4.2 Measure NPSH using procedures prescribed in standard.

3.3.4.3 Where procedures do not exist, discontinue PV, report to the engineer and await instructions.

3.3.5 Multiple Pump Installations - Series and Parallel

3.3.5.1 Repeat PV procedures specified above for pump performance and pump BHP for combinations of pump operations.

3.3.6 Mark points of design and actual performance at design conditions as finally set upon completion of TAB.

3.3.7 Commissioning Reports: in accordance with Section 23 21 23.

3.3.7.1 Record of point(s) of actual performance at maximum and minimum conditions and for single and parallel operation as finally set at completion of commissioning on pump curves.

3.3.7.2 Reports must indicate pump performance curves (family of curves).

ENF OF SECTION

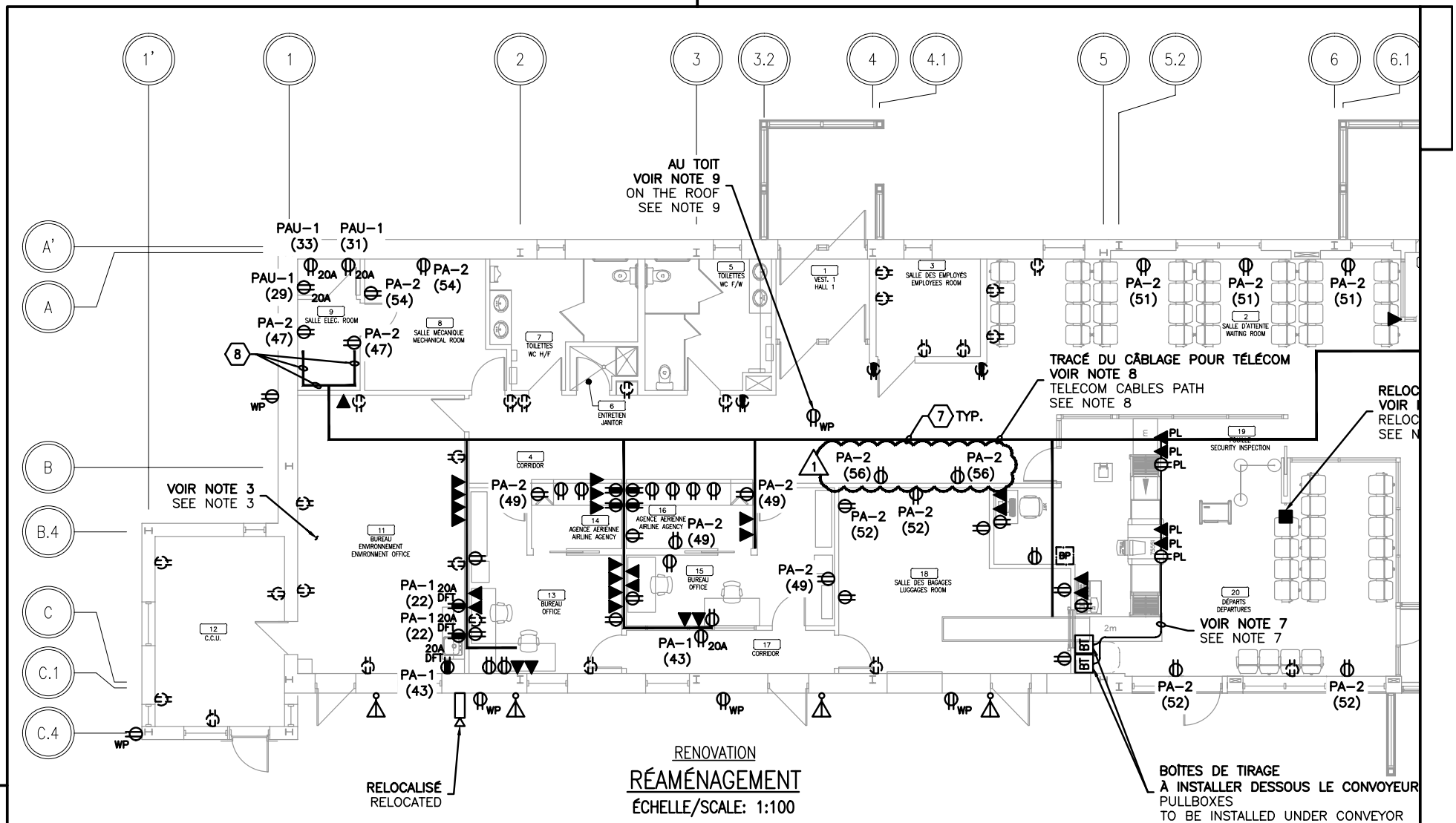

RENOVATION

RÉAMÉNAGEMENT

ÉCHELLE/SCALE: 1:100

AutoCAD 2017/05/29 \\SI-FS01\SI-PROJETS\112259.002\200-CONTENU\35-DESSINS\EIC\R_075371_001-E006.DWG

Travaux publics et Services gouvernementaux Canada Direction générale des biens immobiliers Région du Québec Public Works and Government Services Canada Real Property branch Quebec region Canada	Projet/ *Project*: AÉROGARE DE BLANC SABLON *BLANC SABLON TERMINAL*	conçu par/ *designed by*: RÉMI BOUCHER — date: 2017-05-29	dessiné par/ *draw by*: P. O.-F. — date: 2017-05-28		
		approuvé par/ *approved by*: LORAINE LUSSIER — date: 2017-05-29	échelle/ *scale*: INDIQUÉE / AS SHOWN	date: 2016-08	
	Titre du dessin/ *Drawing title*: EXTRAIT DU PLAN E006 (ADDENDA 1) EXTRACTED FROM E006 DRAWING (ADDENDUM 1)	gestionnaire de projet/ *project manager* — date	no de projet/*project no*: R_075371.001	No feuille/ *Sheet no*: 01 DE 07	
		nom du fichier/*file name*			

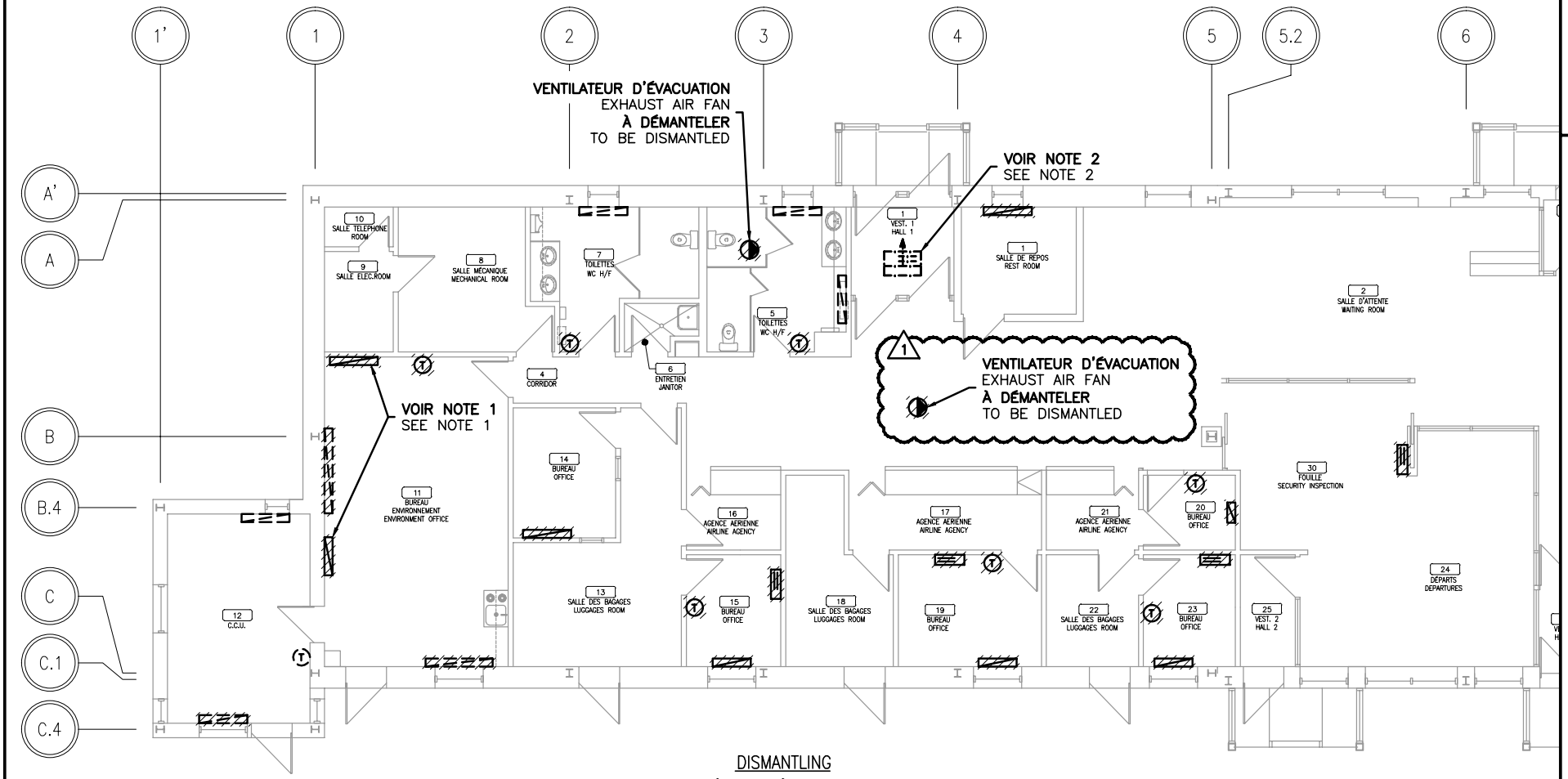

DISMANTLING

DÉMANTÈLEMENT

ÉCHELLE/SCALE: 1:100

AutoCAD 2017/05/29 \\SI-FS01\SI-PROJETS\112259.002\200-CONTENU\35-DESSINS\EIC\R_075371_001-E007.DWG

Travaux publics et Services gouvernementaux Canada Direction générale des biens immobiliers Région du Québec Public Works and Government Services Canada Real Property branch Quebec region Canada	Projet/ *Project*	AÉROGARE DE BLANC SABLON *BLANC SABLON TERMINAL*	conçu par/ *designed by* RÉMI BOUCHER date 2017-05-29	dessiné par/ *draw by* P. O.-F. date 2017-05-28	
			approuvé par/ *approved by* LORAINE LUSSIER date 2017-05-29	échelle/ *scale* INDIQUÉE / AS SHOWN	date 2016-08
	Titre du dessin/ *Drawing title*	EXTRAIT DU PLAN E007 (ADDENDA 1) EXTRACTED FROM E007 DRAWING (ADDENDUM 1)	gestionnaire de projet/ *project manager* date nom du fichier/*file name*	no de projet/*project no* R_075371.001	No feuille/ *Sheet no* 02 DE 07

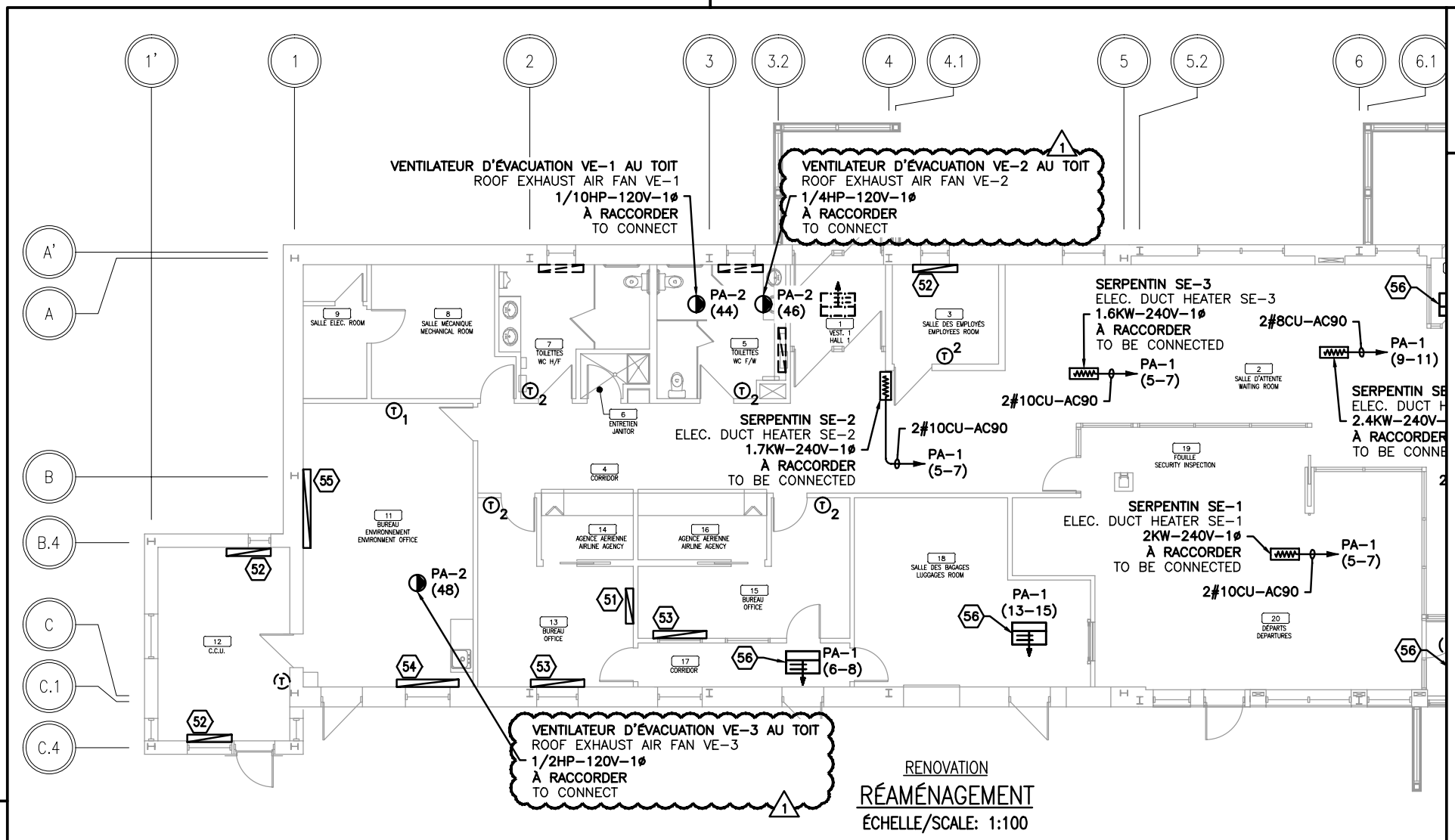

AutoCAD 2017/05/29 \\SI-FS01\SI-PROJETS\11259.002\200-CONTENU\35-DESSINS\EIC\R_075371_001-E007.DWG

Travaux publics et Services gouvernementaux Canada
Direction générale des biens immobiliers
Région du Québec

Public Works and Government Services Canada
Real Property branch
Quebec region

Canada

Projet/ *Project*	AÉROGARE DE BLANC SABLON *BLANC SABLON TERMINAL*	conçu par/ *designed by* RÉMI BOUCHER	date 2017-05-29
		approuvé par/ *approved by* LORAINE LUSSIER	date 2017-05-29
Titre du dessin/ *Drawing title*	EXTRAIT DU PLAN E007 (ADDENDA 1) EXTRACTED FROM E007 DRAWING (ADDENDUM 1)	gestionnaire de projet/ *project manager*	date
		nom du fichier/*file name*	

dessiné par/ *draw by* P. O.-F.	date 2017-05-28	
échelle/ *scale* INDIQUÉE / AS SHOWN	date 2016-08	
no de projet/*project no* R_075371.001	No feuille/ *Sheet no* 03 DE 07	

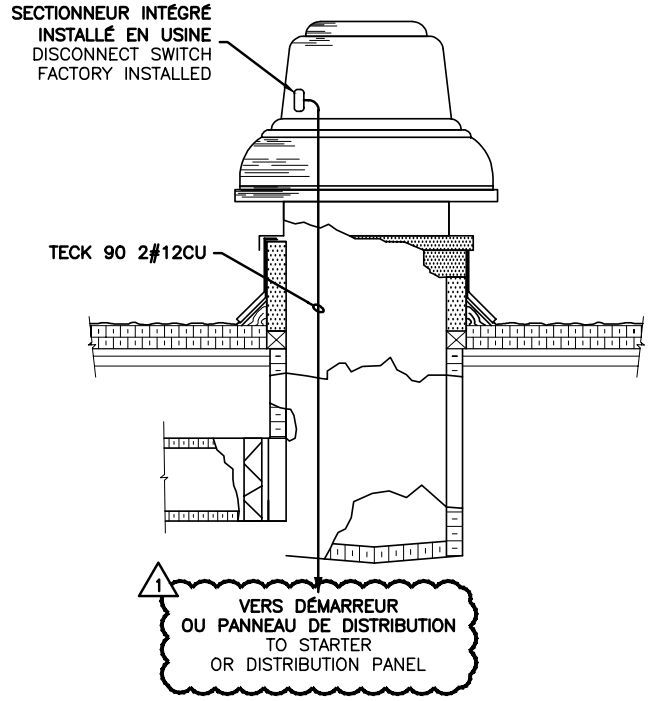

5
–

ROOF EXHAUST AIR FAN TYPICAL WIRING
RACCORDEMENT TYPIQUE VENTILATEUR D'ÉVACUATION

ÉCHELLE/SCALE: N.A.E./N.T.S.

AutoCAD 2017/05/29 \\SI-FS01\SI-PROJETS\112259.002\200-CONTENU\35-DESSINS\EIC\R_075371_001-E007.DWG

Travaux publics et Services gouvernementaux Canada Direction générale des biens immobiliers Région du Québec	Public Works and Government Services Canada Real Property branch Quebec region Canada	Projet/ *Project*	AÉROGARE DE BLANC SABLON *BLANC SABLON TERMINAL*	conçu par/ *designed by* RÉMI BOUCHER date 2017-05-29	dessiné par/ *draw by* P. O.-F. date 2017-05-28
				approuvé par/ *approved by* LORAINE LUSSIER date 2017-05-29	échelle/ *scale* INDIQUÉE / AS SHOWN date 2016-08
		Titre du dessin/ *Drawing title*	EXTRAIT DU PLAN E007 (ADDENDA 1) EXTRACTED FROM E007 DRAWING (ADDENDUM 1)	gestionnaire de projet/ *project manager* date nom du fichier/*file name*	no de projet/*project no* R_075371.001
					No feuille/ *Sheet no* 04 DE 07

LISTE D'ÉQUIPEMENTS DE VENTILATION
VENTILATION EQUIPEMENTS LIST

1

VE1 **VENTILATEUR D'ÉVACUATION CENTRIFUGE À PROJECTION VERS LE BAS. DÉBIT DE 250 L/S @ 62 PA PS. MOTEUR 186 W EC AVEC ALIMENTATION 115/1/60, CONSTRUCTION EN ALUMINIUM ET ATTACHES RÉSISTANTES À LA CORROSION, ENTRAÎNEMENT DIRECT AVEC COMMUTATEUR DE VITESSE ÉLECTRONIQUE, CONÇU ET TESTÉ POUR LES VENTS FORTS ET LES OURAGANS, SECTIONNEUR NEMA 4 INTÉGRÉ ET RECOUVERT D'UNE PROTECTION CONTRE L'AIR SALIN.**

DOWNBLAST CENTRIFUGAL EXHAUST VENTILATOR. 250 L/S AIRFLOW @ 62 PA SP. 186 W EC 115/1/60 MOTOR, ALL ALUMINUM HOUSING AND WHEEL, CORROSION RESISTANT FASTENERS, DIRECT DRIVE WITH FAN SPEED CONTROLLER, HURRICANE AND HIGH WIND CONSTRUCTION, PRE-WIRED NEMA 4 DISCONNECT AND COVER WITH PROTECTION AGAINST SALINE AIR.

VE2 **VENTILATEUR D'ÉVACUATION CENTRIFUGE À PROJECTION VERS LE BAS. DÉBIT DE 320 L/S @ 93 PA PS. MOTEUR 186 W EC AVEC ALIMENTATION 115/1/60, CONSTRUCTION EN ALUMINIUM ET ATTACHES RÉSISTANTES À LA CORROSION, ENTRAÎNEMENT DIRECT AVEC COMMUTATEUR DE VITESSE ÉLECTRONIQUE, CONÇU ET TESTÉ POUR LES VENTS FORTS ET LES OURAGANS, SECTIONNEUR NEMA 4 INTÉGRÉ ET RECOUVERT D'UNE PROTECTION CONTRE L'AIR SALINE.**

DOWNBLAST CENTRIFUGAL EXHAUST VENTILATOR. 320 L/S @ 93 PA SP. 186 W EC 115/1/60 MOTOR, ALL ALUMINUM HOUSING AND WHEEL, CORROSION RESISTANT FASTENERS, DIRECT DRIVE WITH FAN SPEED CONTROLLER, HURRICANE AND HIGH WIND CONSTRUCTION, PRE-WIRED NEMA 4 DISCONNECT AND COVER WITH PROTECTION AGAINST SALINE AIR.

AutoCAD 2017/05/29 \\SI-FS01\SI-PROJETS\112259.002\200-CONTENU\35-DESSINS\MBA\R_075371_001_M07.DWG

Travaux publics et Services gouvernementaux Canada
Direction générale des biens immobiliers
Région du Québec

Public Works and Government Services Canada
Real Property branch
Quebec region

Canada

Projet/ Project: AÉROGARE DE BLANC SABLON / BLANC SABLON TERMINAL
Titre du dessin/ Drawing title: EXTRAIT DU PLAN M07 (ADDENDA 1) / EXTRACTED FROM M07 DRAWING (ADDENDUM 1)

conçu par/ designed by: ALAIN TREMBLAY — date: 2017-05-29
approuvé par/ approved by: PAUL McCORMICK — date: 2017-05-29
gestionnaire de projet/ project manager — date
nom du fichier/ file name

dessiné par/ draw by: P. O.-F. — date: 2017-05-28
échelle/ scale: AUCUNE / N.T.S. — date: 2016-08
no de projet/ project no: R_075371.001
No feuille/ Sheet no: 05 DE 07

SÉQUENCE D'OPÉRATION
CHAUDIÈRE

SYSTÈME EN MARCHE:

HIVER (TEMPÉRATURE EXTÉRIEURE INFÉRIEURE À 59°F (15°C))

- LE VENTILATEUR VA1, LA CHAUDIÈRE ET LA POMPE DE CIRCULATION D'EAU DE CHAUFFAGE SONT EN FONCTION;
- SELON LA CÉDULE HORAIRE EN MODE OCCUPÉ LE VOLET D'AIR FRAIS ET DE RETOUR SE POSITIONNENT À LEURS MINIMUM;
- LE VOLET VM-4 OUVRE ET LE VENTILATEUR VE-1 SE MET EN MARCHE;
- LA VALVE DE CHAUFFAGE MODULE AFIN DE MAINTENIR LA TEMPÉRATURE DANS LE CONDUIT EN FONCTION DE LA TEMPÉRATURE EXTÉRIEURE SELON LA CÉDULE SUIVANTE:

T. EXT.	T. ALIM
-20 °C ET -	30 °C
15 °C ET +	15 °C

- LES VOLETS SONT RÉAJUSTÉS SELON LA PLUS GRANDE DEMANDE DES SONDES DE CO2 AFIN DE MAINTENIR LE POINT DE CONSIGNE DE 800 PPM JUSQU'À UN MAXIMUM D'OUVERTURE DU VOLET D'AIR FRAIS DE 30%;
- SUR DÉTECTION DU DÉBIT D'AIR FRAIS DE PLUS DE 250L/S PAR L'INTERMÉDIAIRE DU LECTEUR DE DÉBIT:
  - LE VOLET DE VE-2 OUVRE;
  - LE VOLET DU VENTILATEUR VE-2 MODULE PAR L'ENTREMISE DU LECTEUR DE DÉBIT LOCALISÉ DANS LE CONDUIT POUR COMBLER LE DIFFÉRENTIEL DU DÉBIT TOTAL ADMIS MOINS 5% AFIN DE MAINTENIR LE BÂTIMENT LÉGEREMENT EN PRESSION POSITIVE.
- SELON LA CÉDULE HORAIRE, EN MODE INOCCUPÉ LE VENTILATEUR, LA CHAUDIÈRE ET LA POMPE SONT À L'ARRÊT ET LES VOLETS SONT À LEURS POSITIONS NORMALE. SUR DÉTECTION D'UNE BASSE TEMPÉRATURE DE PIÈCE PAR L'INTERMÉDIAIRE DE LA SONDE «ST», LE VENTILATEUR D'ALIMENTATION, LA CHAUDIÈRE ET LA POMPE DE CHAUFFAGE DÉMARRENT ET LES VOLETS D'AIR FRAIS ET DE RETOUR DEMEURRENT À LEURS POSITIONS NORMALE AFIN DE MAINTENIR LE POINT DE CONSIGNE DE PIÈCE À 68 °F (20 °C).
- L'HUMIDIFICATEUR EN MODE OCCUPÉ MODULE AFIN DE MAINTENIR LE POINT DE CONSIGNE DE HR30%;

OPERATION SEQUENCE
HEATER

SYSTEM START:

WINTER (OUTDOOR TEMPERATURE BELOW 15 °C

- VA1 BLOWER AND CIRCULATION PUMP WATER HEATING START;
- ACCORDING TO THE SCHEDULE TIME IN OCCUPIED MODE, THE FRESH AIR DAMPER AND RETURN DAMPER VANE MOVING TO THEIR MINIMUM POSITION;
- THE VM-4 DAMPER OPENS AND THE VE-1 FAN TURNS ON;
- THE HEATER VALVE MODULATE VALVE IN ORDER TO MAINTAIN THE DESIRED TEMPERATURE ACCORDING TO THE EXTERIOR TEMPERATURE;

EXT. TEMP	SUPPLY TEMP.
-20 °C AND BELOW	30 °C
15 °C AND OVER	15 °C

- DAMPERS ARE REAJUSTED ACCORDING TO GREATER DEMAND FROM CO2 SENSORS IN ORDER TO KEEP THE SET POINT OF 800 PPM UNTIL FRESH AIR DAMPER OPEN MAXIMUM OF THE 30%;
- ON DETECTION OF MORE THAN 250L/S OF FRESH AIR ON THE FLOW METER:
  - THE VE-2 DAMPER OPENS;
  - THE MODULATION OF THE VE-2 FAN DAMPER IS PROVIDED BY THE FLOW METER LOCATED IN THE DUCT TO FILL THE GAP OF THE TOTAL INLET FLOW MINUS 5% TO KEEP THE BUILDING SLIGHTY IN POSITIVE PRESSURE.
- DEPENDING ON THE SCHEDULE TIME IN INNOCCUPIED MODE THE BLOWER, HEATER AND PUMP ARE STOPPED AND THE DAMPERS ARE AT THEIR NORMAL POSITION. ON A LOW ROOM TEMPERATURE DETECTION FROM THE INTERMEDIATE "ST" PROBE, THE FEEDING BLOWER AND THE CIRCULATION PUMP START AS THE FRESH AIR AND RETURN DAMPERS KEEP THEIR NORMAL POSITION IN ORDER TO MAINTAIN THE MINIMUM TEMPERATURE OF 68 °F (20 °C).
- THE HUMIDIFIER IN OCCUPIED MODE MODULATES IN ORDER TO MAINTAIN THE MINIMUM LEVEL OF RH 30%

AutoCAD 2017/05/29 \\SI-FS01\SI-PROJETS\112259.002\200-CONTENU\35-DESSINS\MBA\R_075371_001_M09.DWG

Travaux publics et Services gouvernementaux Canada
Direction générale des biens immobiliers
Région du Québec

Public Works and Government Services Canada
Real Property branch
Quebec region

Canada

Projet/ Project: AÉROGARE DE BLANC SABLON / BLANC SABLON TERMINAL

Titre du dessin/ Drawing title: EXTRAIT DU PLAN M09 (ADDENDA 1) / EXTRACTED FROM M09 DRAWING (ADDENDUM 1)

conçu par/ designed by: ALAIN TREMBLAY — date: 2017-05-29

approuvé par/ approved by: PAUL McCORMICK — date: 2017-05-29

gestionnaire de projet/ project manager — date

nom du fichier/ file name

dessiné par/ draw by: P. O.-F. — date: 2017-05-28

échelle/ scale: AUCUNE / N.T.S. — date: 2016-08

no de projet/ project no: R_075371.001

No feuille/ Sheet no: 06 DE 07

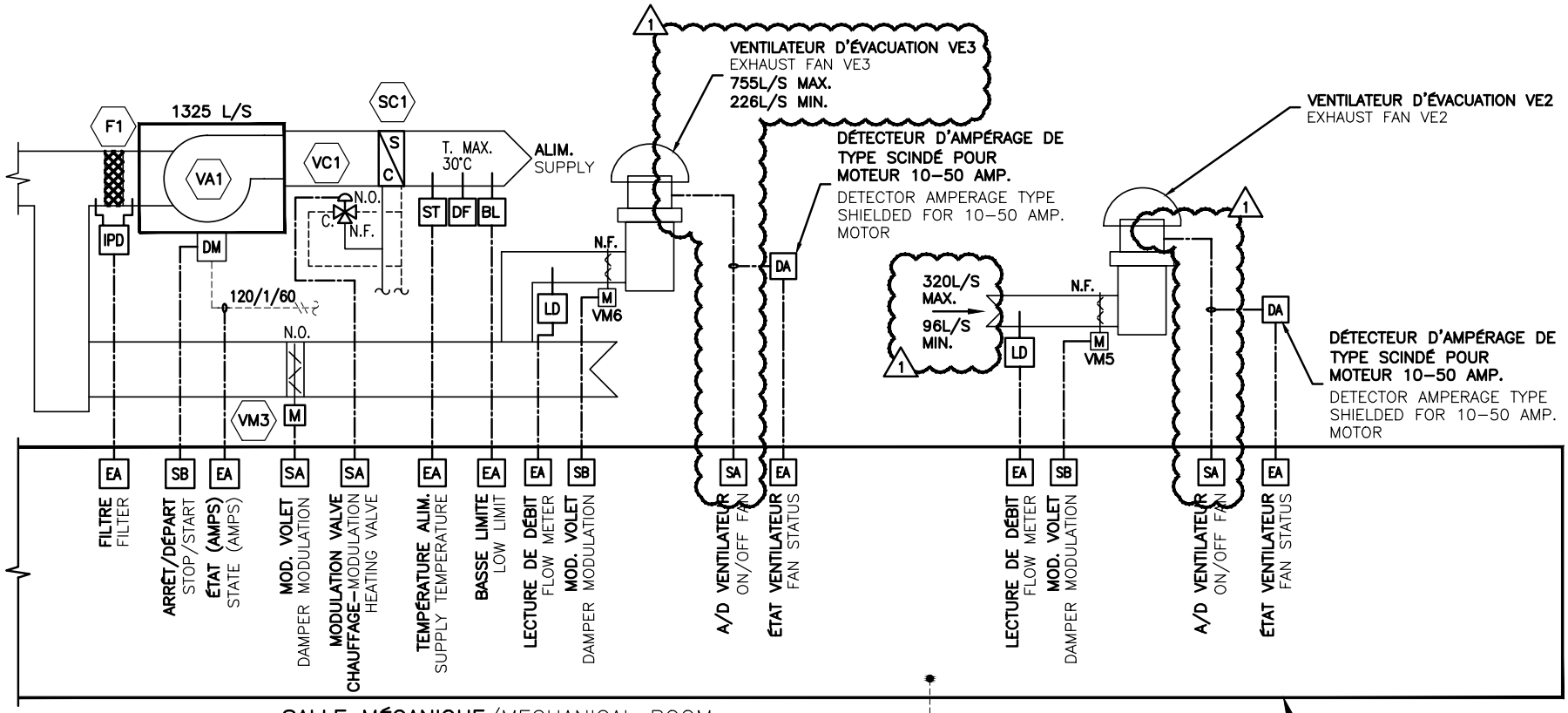

SALLE MÉCANIQUE/MECHANICAL ROOM

DIAGRAMME DE CONTRÔLE/REGULATION DIAGRAM

ÉCHELLE: AUCUNE / NOT TO SCALE

AutoCAD 2017/05/29 \\SI-FS01\SI-PROJETS\112259.002\200-CONTENU\35-DESSINS\MBA\R_075371_001_M09.DWG

Travaux publics et Services gouvernementaux Canada Direction générale des biens immobiliers Région du Québec Public Works and Government Services Canada Real Property branch Quebec region Canada	Projet/ Project: AÉROGARE DE BLANC SABLON *BLANC SABLON TERMINAL*	conçu par/ designed by: ALAIN TREMBLAY — date: 2017-05-29	dessiné par/ draw by: P. O.-F. — date: 2017-05-28		
	Titre du dessin/ Drawing title: EXTRAIT DU PLAN M09 (ADDENDA 1) EXTRACTED FROM M09 DRAWING (ADDENDUM 1)	approuvé par/ approved by: PAUL McCORMICK — date: 2017-05-29	échelle/ scale: AUCUNE / N.T.S.	date: 2016-08	
		gestionnaire de projet/ project manager — date	no de projet/project no: R_075371.001	No feuille/ Sheet no: 07 DE 07	
		nom du fichier/file name			

Les
A R C H I T E C T E S
Odette Roy et Isabelle Jacques

Ville de Saint-Georges, 31 mai 2017
Saint Georges, May 31, 2017

ADDENDA NO A-1 – ARCHITECTURE
Addendum # A-1 - ARCHITECTURE

Objet: Mise aux normes de l'aérogare de Blanc-Sablon (Québec)
Projet no: R.075371.001 /
Upgraded norms for Blanc-Sablon's Terminal (Quebec)
Project no: R.075371.001

A tous les soumissionnaires/*to every tenderers,*

Veuillez accuser réception de cet addenda en inscrivant sur votre formule de soumission, le numéro et la date de celui-ci. Cet addenda fait partie intégrante du document d'appel d'offres et contient 3 pages. / *Please acknowledge the receipt of the addendum by registering the number and the date on your submission form. This addendum is an integral part of the tenders documents and contains 3 pages*.

DEVIS / CONSTRUCTION SPECIFICATIONS

Section 01 14 00 – Restriction visant les travaux / Work restrictions

- Article 1.7.3.2 : **Remplacer** le paragraphe au devis par : Toutes les demandes d'escorte sont à demander et coordonner par l'entrepreneur directement avec la compagnie d'escorte. Le Représentant du Ministère ne gère pas les demandes, il doit par contre être tenu informé des demandes de l'entrepreneur. Les demandes d'escorte doivent être formulées à la compagnie d'escorte au moins 14 jours d'avance. Dans le cas des demandes soumises dans les délais prescrits, le coût de l'escorte sera payé par le Représentant du Ministère. Dans le cas des demandes tardives, le coût sera imputé à l'entrepreneur. / *Article 1.7.3.2 :* ***Replace*** *the paragraph on the construction specification by : Every escort request needs to be asked and coordinated directly by the contractor with the escort company. The Ministry representative does not manage the requests, however he must be informed of all the requests done by the contractor. The escort requests must be formulated to the escort company at least 14 days in advance. If the request are submitted in the deadline prescribed, the escort cost will be paid by the Ministry representative. On the other hand, all the inherent costs to late requests have to be all paid by the contractor.*

Section 01 35 43 – Protection de l'environnement / Environnemental protection

- **Ajouter** l'article suivant : 1.12 Recommandations environnementales supplémentaires de Transports Canada / ***Add*** *this article : 1.12 Additional environnemental recommendations from Transport Canada*
  - Protéger, identifier et entreposer de façon adéquate tout contenant de matières dangereuses à au moins 30 m des fossés de drainage; / *Protect, identify and store in a properly way every hazardous material containers at least 30 m from the drainage ditches;*
  - La gestion et la disposition des matières dangereuses (bois créosoté, batteries, matières souillées, thermostat contenant du mercure, peinture au plomb, etc.) devront se faire selon les normes en vigueur, et ce, dans des sites autorisés à cet effet; */ The managment and the arrangement of the hazardous materials (creosote wood, batteries, soiled materials, thermostat containing mercury, lead paint, etc.) must respect all the effective standards and must be carried out on authorized sites to this effect;*

…2

11525, 1re Avenue, Ville de Saint-Georges (Québec) G5Y 2C7 T (418) 228-7543 F (418) 228-1386 architectes@royjacques.net

DEVIS (suite) / CONSTRUCTION SPECIFICATIONS (continued)

- *S'assurer que les équipements et la machinerie sont en bon état de fonctionnement* et exempt de fuite. / *Ensure that equipments and machineries are in good working order and free from leakage*.
- Le ravitaillement de la machinerie devra se faire sur une surface étanche à au moins 30 mètres des fossés de drainage; / *All machineries must be refueled on a impervious surface at least 30 meters from drainage ditches.*
- Avoir sur le site à proximité des travaux une trousse de déversement complète. Remplacer le matériel utilisé par du matériel neuf. En cas de déversement de matières dangereuses, aviser les autorités responsables et l'agent en environnement de Transports Canada responsable du site dans les plus brefs délais; */ Have on the site, near all the working areas, a complete emergency spill kit. Replace used equipment by new equipment. In case of a hazardous material spill, inform as soon as possible the responsible authorities and the Transport Canada responsible agent onsite.*
- Avoir sur le site des travaux un plan de mesures d'urgence en cas de déversement de matière dangereuses; / *Have on the working site an emergency measures plan in the event of a hazardous material spill;*
- Les eaux qui auront été en contact avec le béton non durci ou partiellement durci (comme les eaux de lavage des bétonnières) ne devront en aucun temps être déversées dans le réseau de drainage ou dans le milieu environnant. Ces eaux devront être gérées hors du site et disposées dans un endroit autorisé ; / *Water that has been in contact with uncured or partially cured concrete (as the wash water of concrete mixers) must never be spilled in the drainage system or in the surrounding environment. These waters need to be managed out of the site and to an authorized area;*
- Les surplus ou restes de béton doivent être déposés dans des contenants étanches conçus à cet effet. Aucun reste de béton ne devra être rejeté au sol ou dans les fossés de drainage ; / *Every excess or residue of concrete must be placed in sealed containers built for this purpose. The concrete can not be discharged to the ground or into the drainage ditches;*
- Remettre le site à son état initial en le nettoyant et en disposant toutes les matières résiduelles. / *Replace the site to its original condition by cleaning it and by disposing all of the residual materials.*

<u>Section 102600.01 Protecteurs de mur et d'angle / Wall and Corner Guards</u>

2. <u>Produits / *Products*</u>

- **Ajouter** 6 protecteurs d'angle métalliques 50 mm x 50 mm x 1200 mm de hauteur en acier inoxydable et accessoires requis. / ***Add*** *6 metal corner guards: 50 mm x 50 mm x 1200 mm height, and required accessories.*
- **Remplacer** pour le local 18 : la protection murale en acier inoxydable prévoir remplacer 1200 mm de hauteur par ±2200 mm de hauteur (aligner le dessus de la protection murale avec les cadres des portes). / ***Replace*** *for the room #18 : The stainless steel metal wall protection of 1200 mm height by ±2200 mm height. (Align the top of the wall protection with the top of door frames).*

PLANS

Feuillet QC131Q605A01 / Sheet QC131Q605A01

- **Ajout** local 30 : Démanteler le port rideau de ce local en vue de le réinstaller. Port rideau composé d'un rail en ''U'' au plafond et d'un rideau. Dimensions de 1200x1200x1200mm. / ***Add*** *room #30* : *Carefully break down curtain and « U » shaped curtain rail fixed at the ceiling, in order to reinstall them after. Dimensions : 1200x1200x1200mm.*

Feuillet QC131Q605A03 / Sheet QC131Q605A03

- **Ajout** local 19 : Réinstaller le port rideau en ''U'' de 1200x1200x1200mm à l'endroit indiqué au plan. Prévoir fond de fixation adéquat dans l'entre plafond. ***Add*** *room 19: Reinstall the 1200x1200x1200 curtain rail where shown on plans. Install any needed backing in the ceiling space.*

Feuillet QC131Q605A11 / Sheet QC131Q605A11

- Local 3 : **Remplacer** les notes de légende 1 et 7 par la note 4. Prévoir bordure métallique entre les différents revêtements de sol dans l'axe de la porte. *Room #3 :* ***Replace*** *notes # 1 and # 7 by note # 4 : Add metalic stip between any different floor covering.*

LES ARCHITECTES
ODETTE ROY ET ISABELLE JACQUES INC.

Par: Odette Roy, architecte

OR/ht