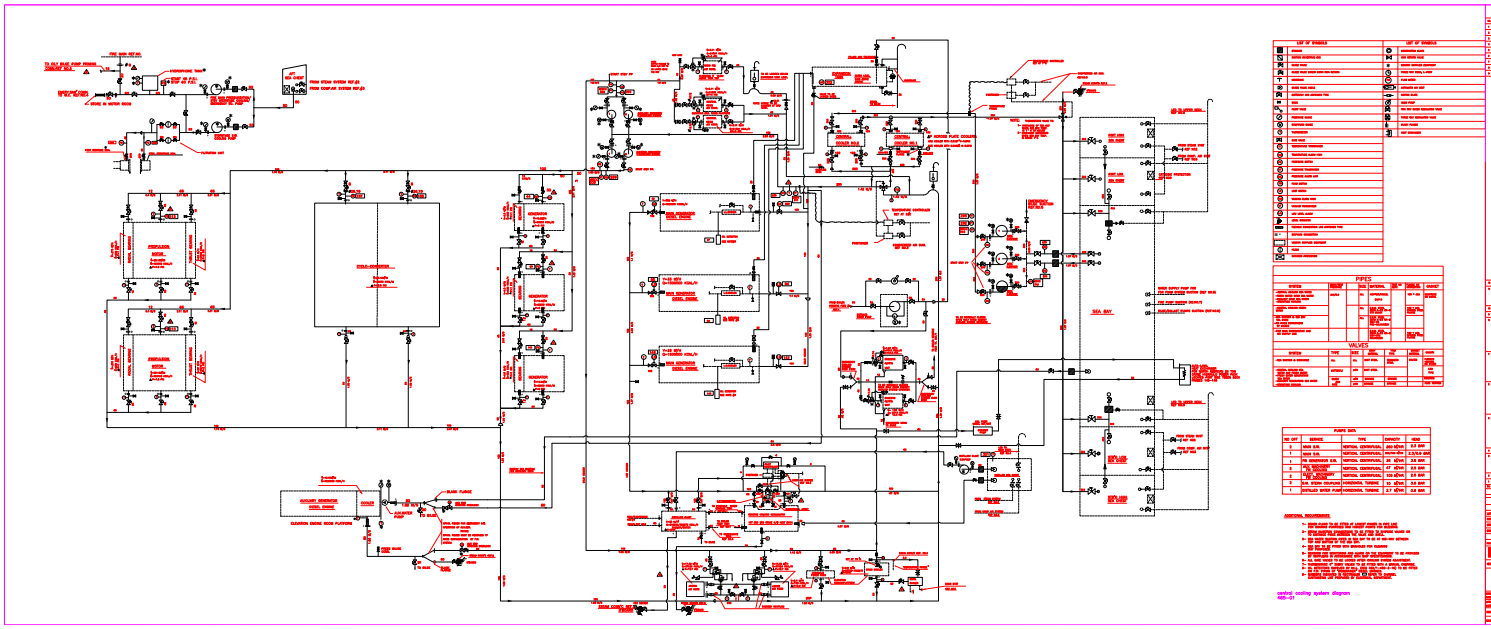

LIST OF SYMBOLS

[illegible]	[illegible]
[illegible]	[illegible]
[illegible]	[illegible]