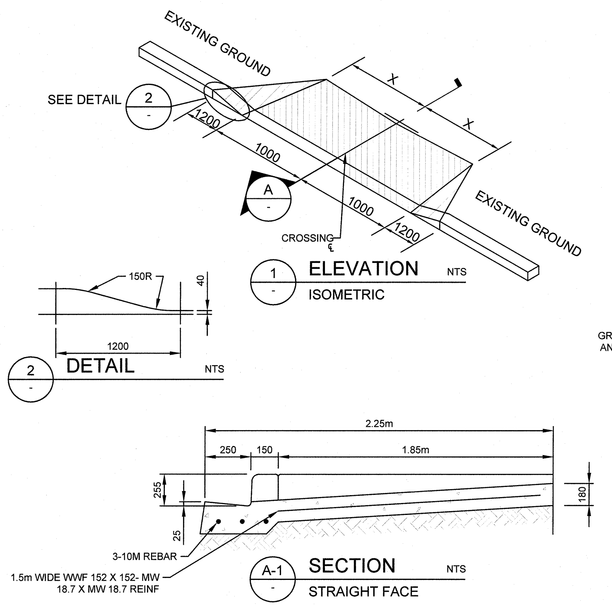

NOTES:
(1) MAXIMUM SLOPE 4% UNLESS OTHERWISE APPROVED BY ENGINEER.
(2) CROSSING TO BE POURED MONOLITHICALLY WITH CURB AND GUTTER.
(3) BACK OF CROSSING DROP FOR EXISTING 200mm CURB HEIGHT IS 100mm.
(4) 15mm MAX BATTER AT BACK OF WALK FOR EXTRUDED SECTIONS.
(5) WWF 152 X 152 - MW / 8.7 X MW / 8.7 REINF TO BE PLACED IN SIDEWALK ACROSS ALL COMMERCIAL, INDUSTRIAL, LANES AND APARTMENT BUILDING DRIVEWAY CROSSINGS.
(6) CONCRETE TO BE 32MPa. COMPRESSIVE STRENGTH AT 28 DAYS WITH 0.5% TO 8% AIR ENTRAINMENT, TYPE HS CEMENT. REINFORCING STEEL TO BE INTERMEDIATE GRADE DEFORMED BARS fy = 300MPa (CONFORM TO CSA SPEC G30.12 M LATEST EDITION). ALL LAPS TO BE 30 BAR DIAMETERS.
(7) INSTALL 3-10M REINFORCEMENT BARS AT ALL COMMERCIAL, INDUSTRIAL, LANES AND APARTMENT BUILDING DRIVEWAY CROSSINGS.
(8) SEE STANDARD DETAIL 3 FOR SIDEWALK JOINT AND FINISHING DETAILS.
(9) REFER TO THE CONTRACT DOCUMENTS FOR DETAILED SPECIFICATIONS.
(10) ALL DIMENSIONS SHOWN IN MILLIMETRES UNLESS NOTED OTHERWISE.

1 C-01 DETAIL
COMMERCIAL / LANE CROSSING

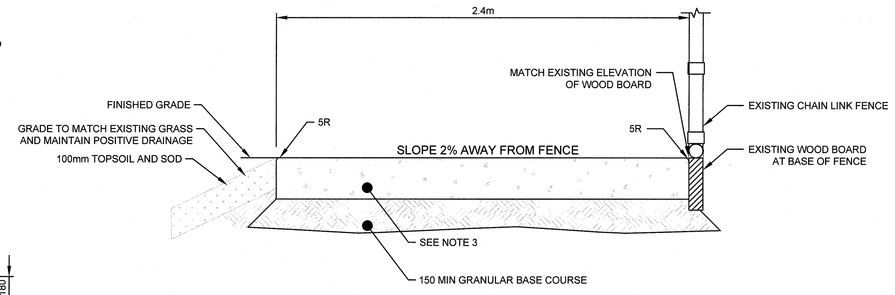

2 - ELEVATION NTS

NOTES:
(1) 2% MINIMUM CROSS SLOPE FOR ALL CROSSINGS.
(2) WHERE SLOPE BETWEEN TOP OF DEPRESSED CURB CROSSING AND FRONT OF WALK WOULD EXCEED 8% FOR PRIVATE (4% FOR LANE AND COMMERCIAL CROSSINGS), SIDEWALK CROSSINGS SHALL BE DEPRESSED SUCH THAT MAXIMUM SLOPE ACROSS BOTH BOULEVARD AND SIDEWALK DOES NOT EXCEED 8% (4% FOR LANE AND COMMERCIAL CROSSINGS)
(3) CONCRETE TO BE 32MPa. COMPRESSIVE STRENGTH AT 28 DAYS WITH 0.5% TO 8% AIR ENTRAINMENT, TYPE HS CEMENT. REINFORCING STEEL TO BE INTERMEDIATE GRADE DEFORMED BARS fy = 300MPa (CONFORM TO CSA SPEC G30.12 M LATEST EDITION) ALL LAPS TO BE 30 BAR DIAMETERS.
(4) REFER TO THE CONTRACT DOCUMENTS FOR DETAILED SPECIFICATIONS.
(5) ALL DIMENSIONS SHOWN IN MILLIMETRES UNLESS NOTED OTHERWISE.

2 C-01 DETAIL
SEPARATE SIDEWALK- 2.0m

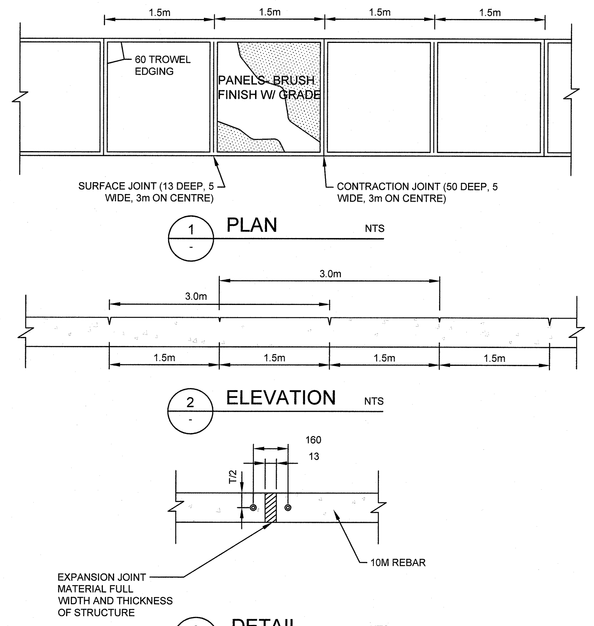

NOTES:
(1) ALL DIMENSIONS SHOWN IN MILLIMETRES UNLESS NOTED OTHERWISE.

3 C-01 DETAIL
SIDEWALK JOINT AND FINISHING DETAILS

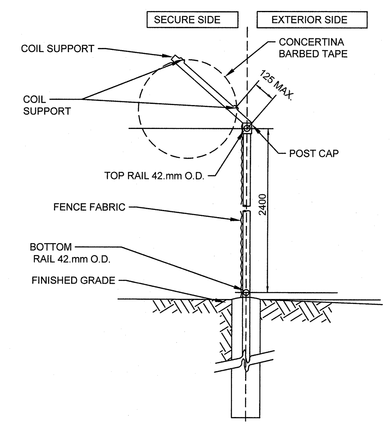

NOTE:
1. POST ARM AND CONCERTINA NOT REQUIRED 2.5m POST PERIMETER FENCE

4 C-01 DETAIL N.T.S.
PLATE WSP-2-1 PERIMETER FENCE

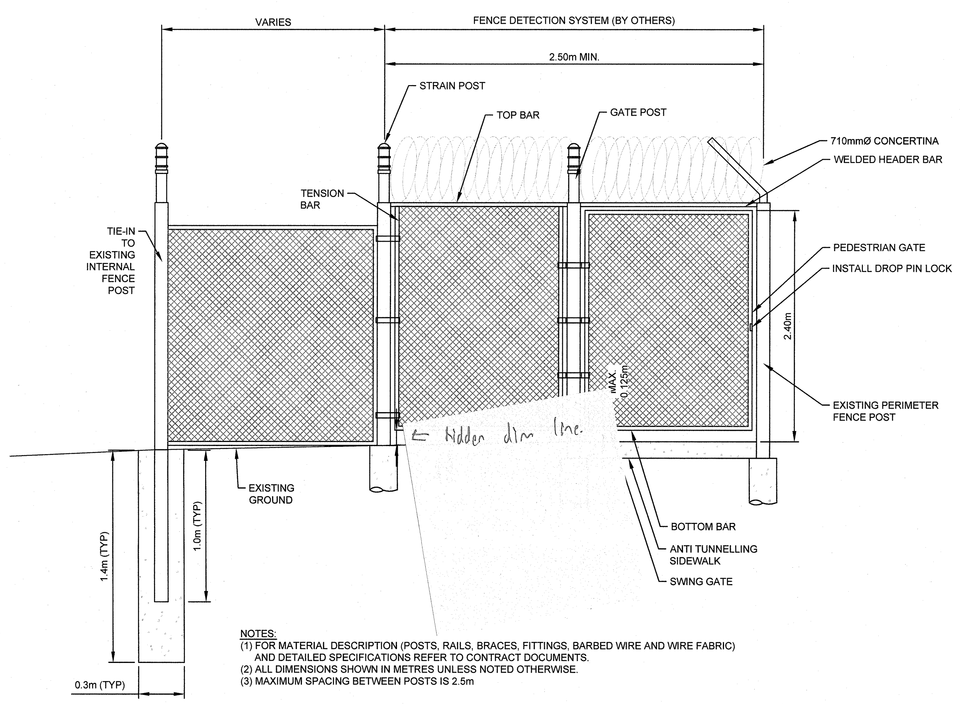

NOTES:
(1) FOR MATERIAL DESCRIPTION (POSTS, RAILS, BRACES, FITTINGS, BARBED WIRE AND WIRE FABRIC) AND DETAILED SPECIFICATIONS REFER TO CONTRACT DOCUMENTS.
(2) ALL DIMENSIONS SHOWN IN METRES UNLESS NOTED OTHERWISE.
(3) MAXIMUM SPACING BETWEEN POSTS IS 2.5m

5 C-01 DETAIL N.T.S.
PEDESTRIAN GATE FENCE

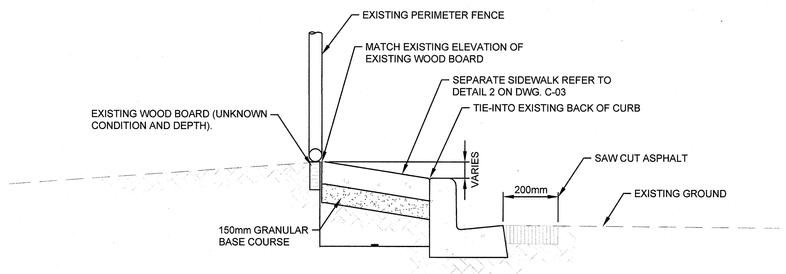

6 C-01 SECTION N.T.S.

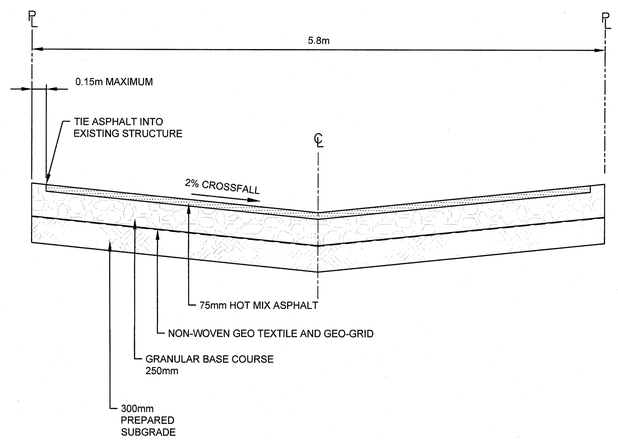

7 C-01 DETAIL N.T.S.
LANE CROSS SECTION

No.	Date/Date	Description/Description	Drawn by Dessiné par	Approved Approuvé
1	2017JUN09	ISSUED FOR TENDER & CONSTRUCTION	RR	ND
0	2017JAN10	ISSUED FOR 60% REVIEW	KC	ND

Revision / Revision

A detail number / numéro de detail
B source drawing no. / de dessin no.
C detail on drawing no. / detail sur dessin no.

Consultant's Name / Nom de l'expert-conseil: Associated Engineering — BEST MANAGED COMPANIES Platinum member

Eng. Stamp / Sceau de l'ingénieur

Public Works and Government Services Canada / Travaux publics et Services gouvernementaux Canada
Client Services Team Southern Alberta Operations Branch / Le Client Entretient l'Équipe Alberta Méridional Branche d'Opérations
Canada

Client/client: Correctional Service Canada / Service Correctionnel Canada — Prairie Region / Région des Prairies

Project title/Titre du projet
EDMONTON INSTITUTION FOR WOMEN
ANTI TUNNELING SIDEWALK

Drawing title/Titre du dessin
CIVIL DETAILS

Surveyed by/Arpenté par	Drawn by/Dessiné par	Date/Date
T. MITCHELL	R.RUSSELL	2017MAY08
Designed by/Concept par	Reviewed by/Revisé par	Scale/Echelle
A. MATHER	P. MASTROMATTEO	1:250

PWGSC Project Manager/Administrateur de Projets TPSGC: J.PATTISON

Client Acceptance/Acceptation du client — Park Responsible Officer/Agent Responsable

Approved by/Approuvé par — PWGSC Project Manager/Administrateur de Projets TPSGC

Project No./No. du projet	Asset No./No. du-bien	Sheet No./No. de la feuille
R.077028.001	00000	4

Drawing Reference No./No. de réference du dessin: C-03

AD 1189 x 841