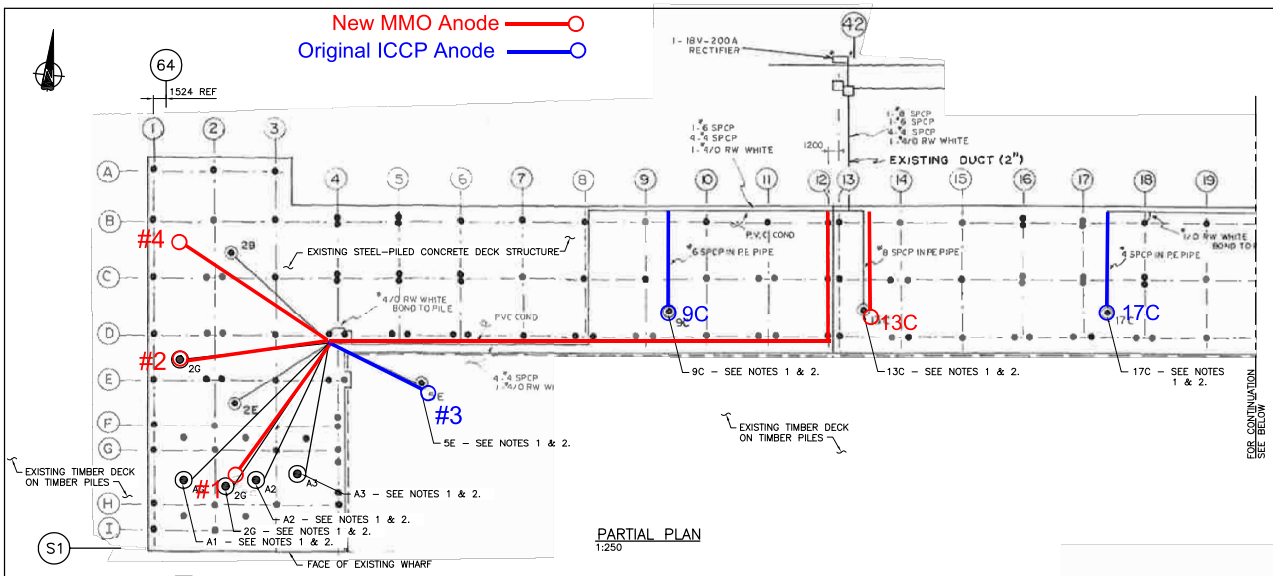

PARTIAL PLAN
1:250

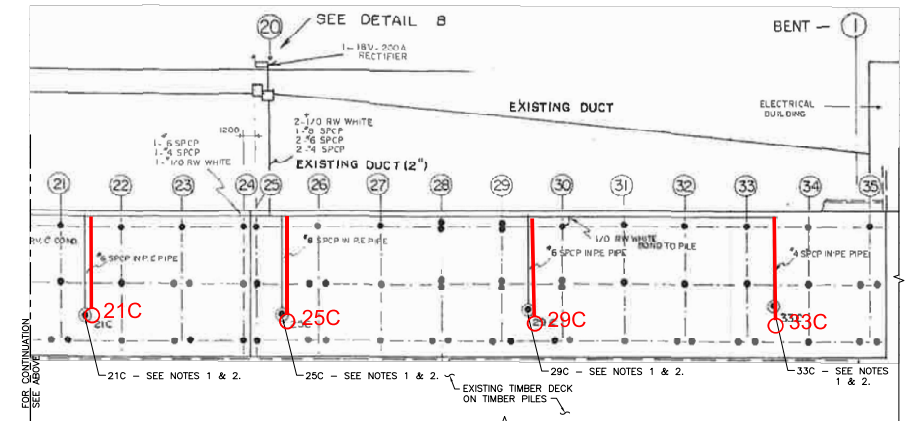

PARTIAL PLAN
1:250

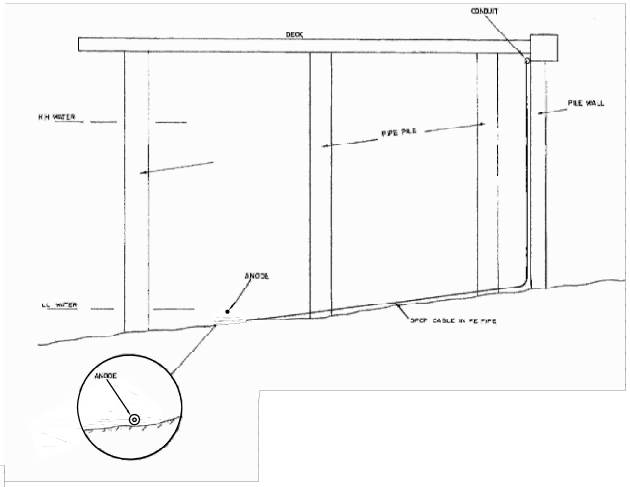

TYPICAL SECTION
N.T.S.

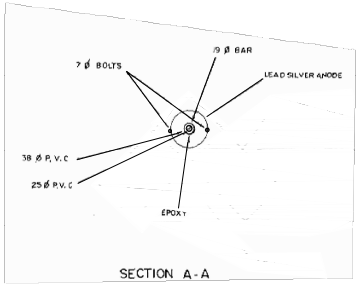

SECTION A-A

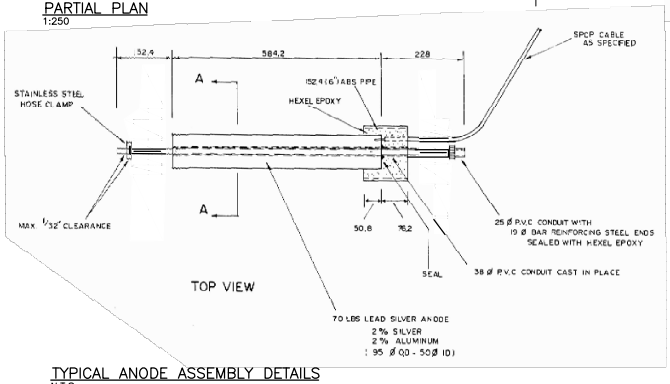

TOP VIEW

TYPICAL ANODE ASSEMBLY DETAILS
N.T.S.

LEGEND:

- LEAD SILVER ANODE
- EXISTING STEEL PIPE PILE

NOTES:

1. TEMPORARILY REMOVE, STORE AND REINSTATE ANODES TO ORIGINAL LOCATION AFTER DREDGING AND ENGINEERED CAPPING WORK ARE COMPLETED.
2. DO NOT DAMAGE THE INSULATION ON THE ANODE CABLE DURING REMOVAL AND REINSTATING.
3. DETAILS TAKEN FROM ESQUIMALT GRAVING DOCK IMPROVEMENTS, PROJECT NUMBER PR.100772 DRAWINGS 15 AND 16 OF 75, SUPPLEMENTED BY FIELD INFORMATION FROM EGD SEDIMENT REMEDIATION SOUTH JETTY UNDER-PIER EROSION PROTECTION RECORD DRAWINGS S15 (REFERENCE DRAWINGS).
4. REFER TO SPECIFICATION SECTION 02 41 13 FOR ICCP SYSTEM REQUIREMENTS.

CORROSION TESTING REQUIREMENTS:

1. INSPECT AND TEST THE ICCP SYSTEM BEFORE DISCONNECTING AND AFTER REINSTATEMENT TO CONFIRM THAT THE REINSTATED ICCP SYSTEM PROVIDES THE SAME OPERATIONAL PERFORMANCE LEVEL AS PREVIOUSLY EXISTED.

Public Works and Government Services Canada / Travaux publics et Services gouvernementaux Canada
REAL PROPERTY SERVICES
Pacific Region
SERVICES IMMOBILIERS

Klohn Crippen Berger

Revision/ Revision	Description/Description	Date/Date
0	ISSUED FOR TENDER	2014/12/19

Client/client
PUBLIC WORKS AND GOVERNMENT SERVICES CANADA

Project title/Titre du projet
ESQUIMALT GRAVING DOCK
825 ADMIRALS ROAD, VICTORIA, BC

ESQUIMALT GRAVING DOCK WATERLOT PHASE 2
SOUTH JETTY UNDER-PIER SEDIMENT REMEDIATION

Consultant Signature Only

Designed by/Concept par
GEOFF COOPER

Drawn by/Dessine par
ARNIE RIST

PWGSC Project Manager/Administrateur de Projets TPSGC
ANDREW MYLLY

Regional Manager, Environmental Services
COLLIN KINGMAN

Drawing title/Titre du dessin
SOUTH JETTY
MODIFICATIONS TO
CATHODIC PROTECTION SYSTEM

Project No./No. du projet	Sheet/	Revision no./
R.018400.002	E11	0

PWGSC – A1 – 841X594

DMSXXXXXX