FEEDER LIST	
1	4 #10 RW90 + 1 #12 TW GROUND IN 27mm CONDUIT
2	4 #8 RW90 + 1 #10 TW GROUND IN 27mm CONDUIT
3	4 #4 RW90 + 1 #8 TW GROUND IN 35mm CONDUIT
4	4 #600KCM RW90 + 1 #2 TW GROUND IN 102mm CONDUIT
5	4 #3 RW90 + 1 #6 TW GROUND IN 35 mm CONDUIT
6	3 #1/0 RW90 + 1 #6 TW GROUND IN 53mm CONDUIT
7	4 #500KCM RW90 + 1 #3 TW GROUND IN 103mm CONDUIT

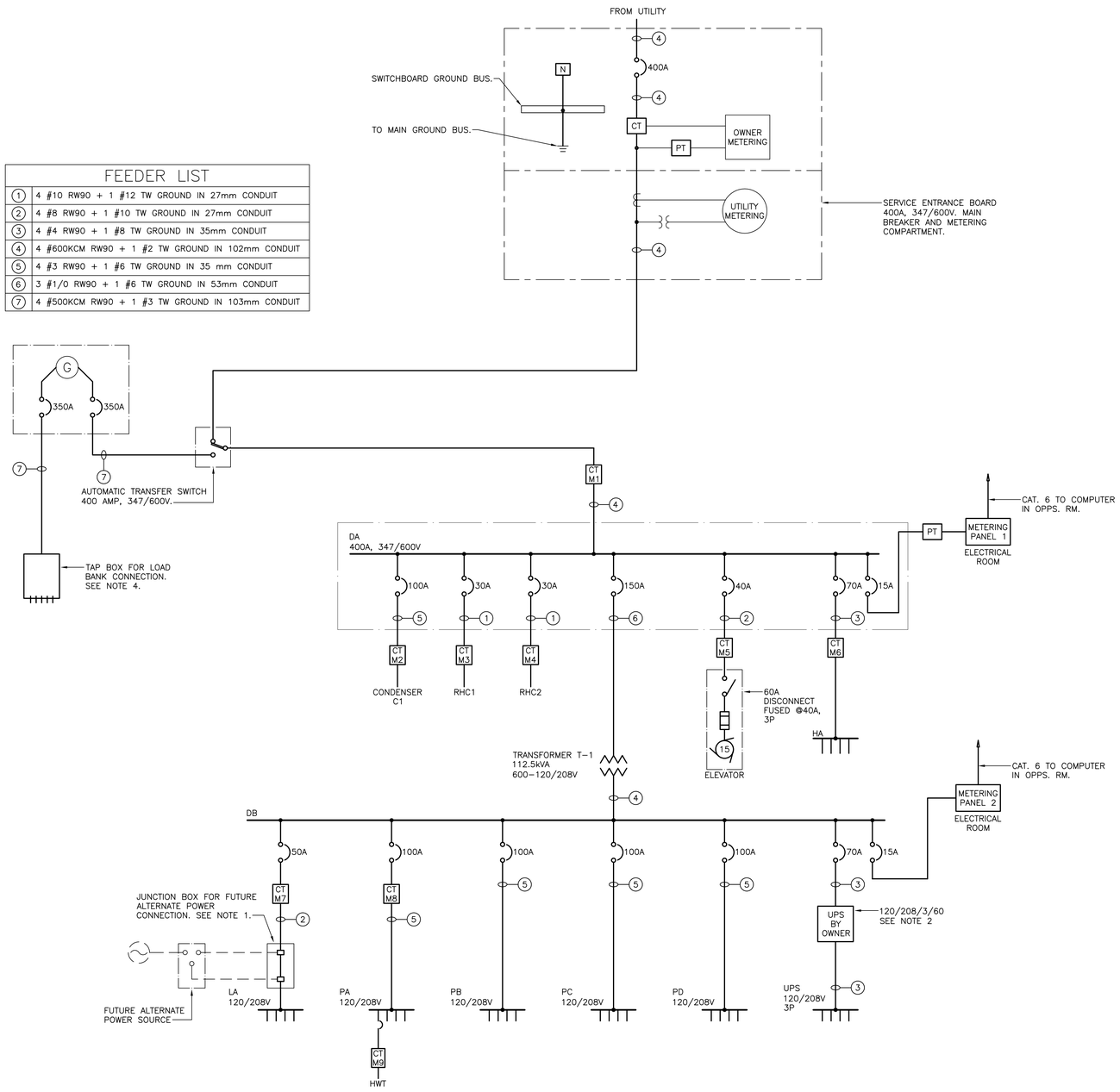

SINGLE LINE DIAGRAM 1/E7

SCALE : NTS

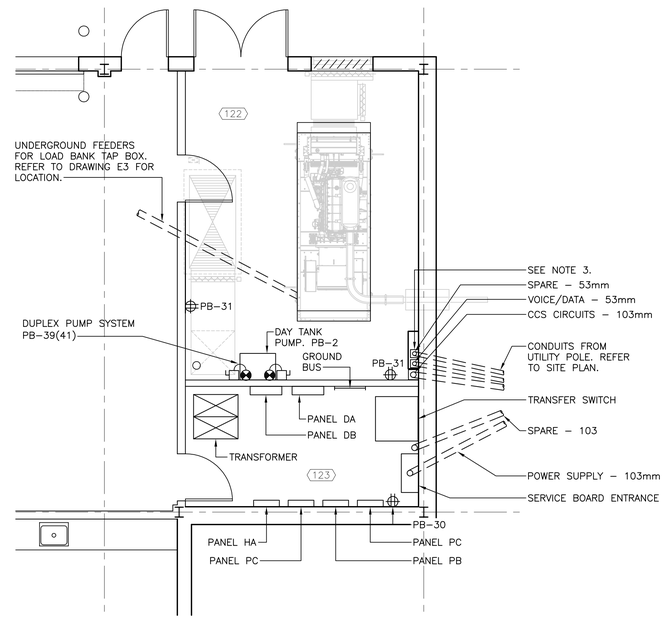

POWER PLAN ELECTRICAL ROOM 4/E7

SCALE : 1:50

Public Works and Government Services Canada / Travaux Publics et Services gouvernementaux Canada

amec foster wheeler

PROVINCE OF NEWFOUNDLAND AND LABRADOR
PEGNL Newfoundland and Labrador PROFESSIONAL ENGINEERS AND GEOSCIENTISTS
PERMIT HOLDER
This Permit Allows
AUG.01,2017
Amec Foster Wheeler Americas Limited
To practice Professional Engineering in Newfoundland and Labrador.
Permit No. as issued by PEG D0018
which is valid for the year 2017 .

REGISTERED PROFESSIONAL ENGINEER
WILLIAM C. CALDWELL
SIGNATURE
2017-08-01
DATE
NEWFOUNDLAND & LABRADOR

NOTES:

1. PROVIDE 300 X 300 X 150mm JUNCTION BOX ENCLOSURE WITH SCREW-ON COVER. INCLUDE CABLE LUGS SO THAT THE CONNECTION BETWEEN LUGS CAN BE REMOVED AND ALTERNATE POWER WIRING CONNECTED.
2. UPS SUPPLIED BY OWNER. CONTRACTOR TO POSITION UPS UNIT ON SITE AS DIRECTED BY OWNER'S REPRESENTATIVE AND MAKE INCOMING AND OUTGOING CONNECTIONS.
3. CONDUITS FROM UTILITY POLE TO TURN UP ON WALL. CAP SPARE CONDUITS 400mm ABOVE FLOOR AND IDENTIFY WITH PERMANENT LABEL. CONDUIT FOR VOICE/DATA TO EXTEND UP TO A 300 X 300 PULL BOX AT THE CEILING AND RUN FROM THE BOX TO LAN RM. 106. CONDUITS FOR THE CCS CIRCUITS TO EXTEND UP TO A 600 X 600 PULL BOX AT CEILING AND RUN FROM BOX TO LAN RM. 106. REFER TO DRAWING E4.
4. PROVIDE TAP BOX FOR LOAD BANK CONNECTION, 400 AMP, QUICK CONNECT FITTINGS, DEAD FRONT HINGED DOOR, STAINLESS STEEL WEATHER PROOF ENCLOSURE, COLOUR CODED CONNECTIONS.

revisions		date
D	REISSUED FOR TENDER	AUG 01 2017
C	ISSUED FOR TENDER	JUN 28 2017
B	ISSUED FOR 99% REVIEW	MAY 25 2017
A	ISSUED FOR CLIENT REVIEW	APR 28 2017

project / projet

MCTS CENTRE

PORT AUX BASQUES

drawing / dessin

ELECTRICAL SINGLE LINE DIAGRAM

designed / conçu: DZ — date: AUGUST 1 2017
drawn / dessiné: TDB — date: AUGUST 1 2017
approved / approuvé: WB — date: AUGUST 1 2017
Tender / Soumission: g. f. macgillivray Aug. 4/17
PWGSC Project Manager / Administrateur de projets TPSGC

project number / no. du projet: R.081781.004

drawing no. / no. du dessin: E7