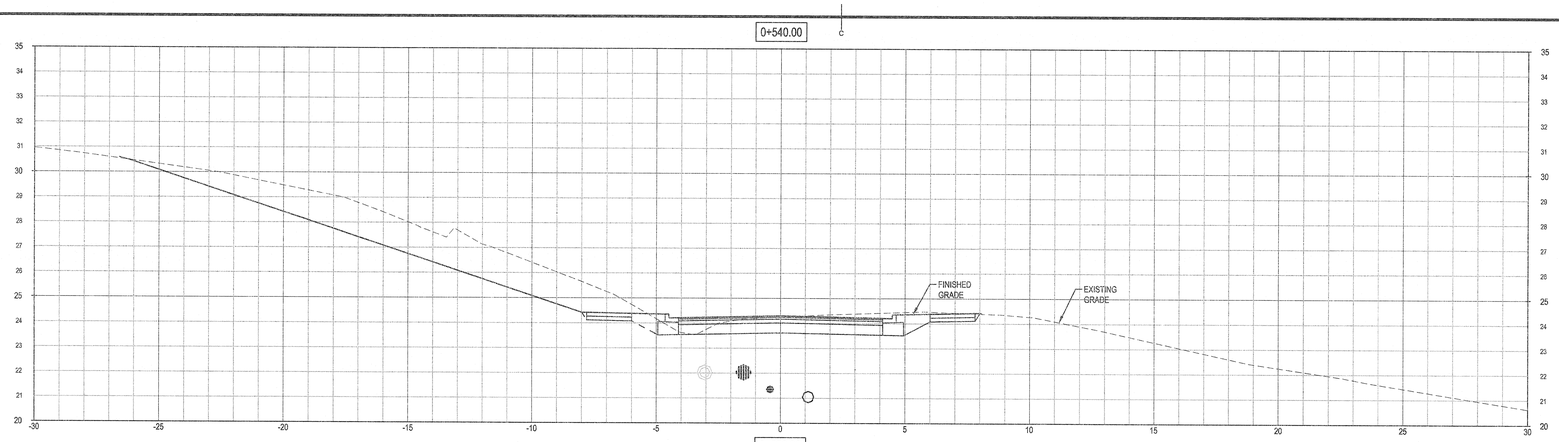

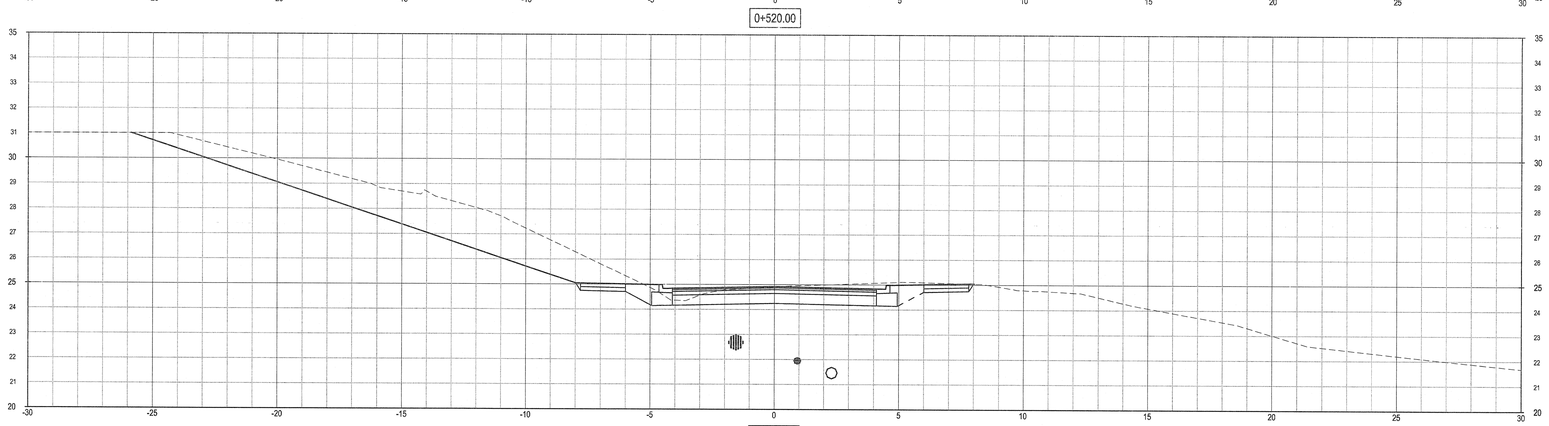

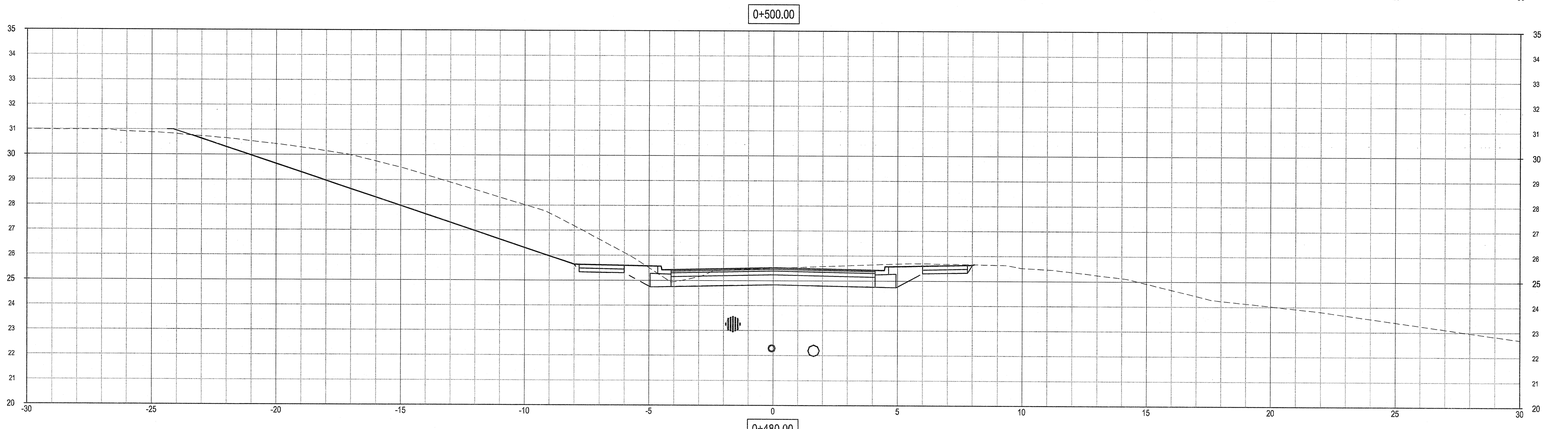

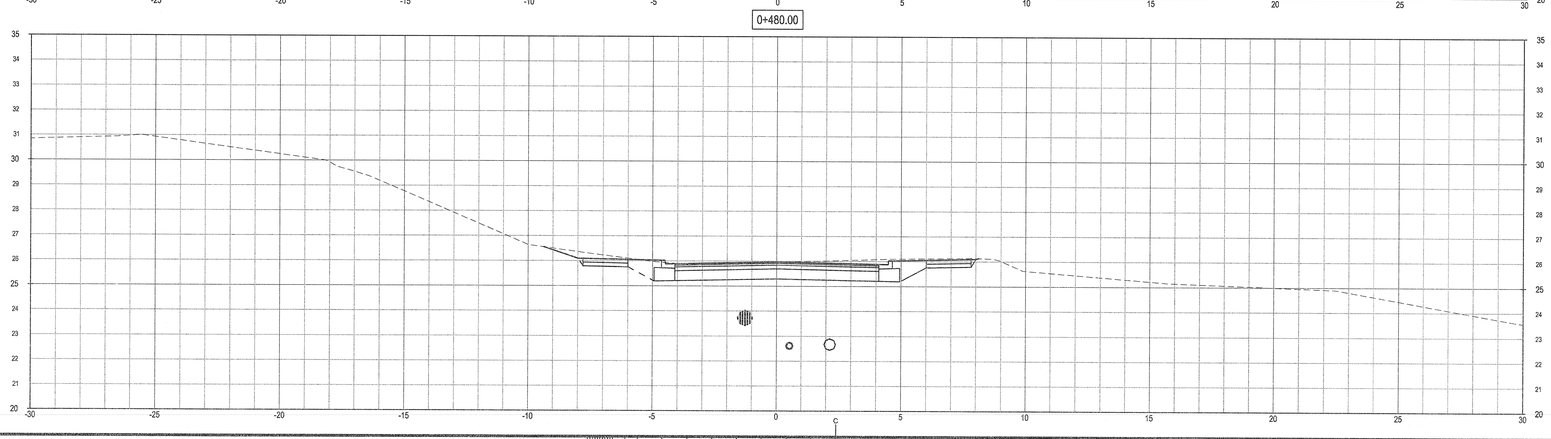

Public Works and Government Services Canada
Travaux Publics et Services gouvernement aux Canada

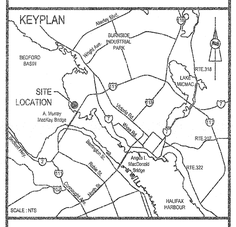

SNC·LAVALIN

SNC·LAVALIN Inc.
Halifax, Nova Scotia, Canada

Certified ISO 9001

Member of the SNC·LAVALIN Group

NOTES:

1. DESIGN SECTIONS ARE REFERENCE ONLY TO ILLUSTRATE GRADING OF THE ROAD AND EMBANKMENT. CONSTRUCTION SHALL BE IN ACCORDANCE WITH TYPICAL SECTIONS.

REGISTERED PROFESSIONAL ENGINEER
DATE Aug 23
M. W. Ebrom
9719
PROVINCE OF NOVA SCOTIA

revisions		date
C04	ISSUED FOR TENDER	AUG 23 2017

project / projet
BEDFORD INSTITUTE OF OCEANOGRAPHY
DARTMOUTH, NS

SECOND ACCESS ROAD

drawing / dessin
SECTIONS
SHEET 6

designed / conçu: JG
date
drawn / dessiné: DB
date
approved / approuvé: ME
date
Tender / Soumission
PWGSC Project Manager / Administrateur de projets TPSGC
project number / no. du projet: R.073592.001
drawing no. / no. du dessin: C35

PWGSC B1 (2004)

E-DRM/GDD-E: # 547537