PART 1 – GENERAL

1.1 RELATED WORK

.1 Refer to Section 01 33 00 for submittal requirements.

1.2 REFERENCE STANDARDS

.1 ASTM C127-88(2001) el (or latest edition) Specific Gravity and Absorption or Coarse Aggregate.

.2 AASHTO T85-88 (or latest edition) Specific Gravity and Absorption of Coarse Aggregate.

1.3 SUBMISSIONS

.1 Product Data/Samples:
.1 Provide samples of materials proposed for the work.

.2 Methodology:
.1 Provide methodologies for carrying out the work. To include explanation of demolition and removal sequence, disposal and re-use, construction approach, trenching and layering strategies, sequence of work, survey control, protection of work and heating and hoarding of deck.
.2 Contractor to provide methodology for construction access, temporary road construction and stability monitoring for review.

1.4 SOURCE SAMPLING

.1 Inform the Departmental Representative of proposed source of materials and provide access for sampling at least 4 weeks prior to commencing work.

.2 Provide test results from the quarry supporting specified requirements.

1.5 EXISTING CONDITIONS

.1 The bidder must ascertain what preparatory work will be required for the following:
.1 Stockpile and haul routes.
.2 Preparation, maintenance and removal of temporary roadways to and on the breakwater for the use of trucks, excavators, draglines, etc.
.3 Harbour Bridge and structures are not to be used for construction loads. Both are posted for passenger cars only.

.2 The land surrounding the site is the property of Her Majesty the Queen in the Right of Canada and the contractor will exercise extreme care to prevent damage to the land.

.3 The existing load carrying capacity and as-built cross section of Structure #306 is unknown.

1.6 HAUL ROADS

.1 The contractor shall be solely responsible for construction and maintenance of temporary roads which shall be considered incidental to the work. All temporary roads shall be removed at the completion of the project and the land restored to its original condition.

1.7 MEASUREMENT FOR PAYMENT

.1 Core stone, Filter stone and Armour stone will be measured in accordance with Section 01 10 10.

.2 Prices will include the entire cost of supplying and placing the material in the work, rough grading as necessary, the leveling and finish grading of the listed materials, taking soundings, producing cross sections, diving inspections all as shown on the drawings, and as specified.

.3 Transportation of material and any excavation and preparation of existing material will not be measured for payment but will be considered

incidental to the work.

.4 No payment will be made for working surfaces or haul roads.

.5 Making good to the satisfaction of the Departmental Representative, any damage to structures, roads, or work surfaces will be considered incidental to the work.

.6 Do not mix different categories of material in the same truckload. Only one class of material will be weighed for payment at any given time. If rocks of markedly different sizes are present, the Departmental Representative reserves the right to weigh such rocks separately for payment. There will be no additional payment for weighing individual stone units which do not meet the category of material listed for the truckload.

.7 Incidental to the work will be weight receipts from a certified scale provided by the contractor for each load of filter and armour material delivered to the site. The weight receipts are to be in triplicate, one copy for the contractor, one copy for the quarry(s) and one copy for the Departmental Representative. Receipts from the quarry and the site are to be matched prior to request for payment.

.8 Existing armour stone that is indicated to be reshaped and knitted into the new work shall be measured in accordance to Section 01 10 10.

.9 Layout and survey control, including cross sections during placement, will constitute a lump sum for measurement purposes in accordance with Section 01 10 10.

.10 Supply of all traffic control devices and personnel shall not be measured for payment.

PART 2 – PRODUCTS

2.1 MATERIALS

.1 Hard durable crushed quarried rock, free from excessive fines, silt, clay, organic matter and other foreign substances and free from splits, seams or defects likely to impair its soundness during handling or under action of water.

.2 Specific gravity of not less than 2.65 when tested to ASTM C127 or AASHTO T85. Max absorption shall be 3.5% for corestone, and 2.0% for armour stone and filter stone. Actual specific gravity and absorption will be determined by testing selected samples of material being incorporated into the work. Materials with a specific gravity less than the specified minimum or an absorption rate in excess of the specified maximum will be rejected.

.3 Armour Stone: Dimension of each rock shall not exceed two times the least dimension. Armour stone shall consist of 4-6 tonne stones (mean weight of 5 tonnes).

.4 Filter stone: Dimension of each rock shall not exceed two times the least dimension. Filter stone shall consist of 400 - 600 kg stones.

.5 Filter stones in toe: Dimension of each rock shall not exceed two times the least dimension. Filter stone shall consist of 800 - 1000 kg stones.

.6 Actual specific gravity and absorption will be determined by testing selected samples of material being incorporated into the work. Materials with a specific gravity less than the specified minimum or an absorption rate in excess of the specified maximum will be rejected.

PART 3 – EXECUTION

3.1 PREPARATION

.1 Reshape and knit existing armour stone into new work as indicated on the drawing.

.2 For the construction of the toe cross section, sound area and record elevation of material on which new material will be placed before placement.

.3 Assure the new filter and armour stone is placed in such a way that the marine deposits can displace outwards away from the stone placement as the breakwater is constructed.

.4 Assure throughout the stone placement that the new breakwater structure is stable and safe for equipment, workers and material loads.

.5 Excavation for breakwater toe key must be excavated to lines and grades shown on the drawings. Take no risks in equipment and reach.

.6 All excavated material shall be hauled to a disposal sites within the property boundary of the harbour authority.

3.2 PLACEMENT

.1 Submit proposed access to construct, methods of material placement, and construction sequence for review and consideration prior to starting work.

.2 Blend new armour into existing armour.

.3 Rework and knit existing armour stone as required into new work. The existing armour is to become integral with the new work. There is to be a minimum of 2 layers of armour stone in the final cross section, some of which will be a combination of new and existing stones.

.4 Filter Stone and Armour Stone layers shall be

placed according to the following:

.1 Place each Filter / Armour stone layer to lines, grades and dimensions indicated on the plans.

.2 Place each Filter stone / Armour stone individually using mechanical means to the lines, grades and dimensions shown on the plans. Do not dump units into place. Commence placement at toe of slope and proceed up the slope towards the crest. Place each stone so that it is stable, secure on slope and supported by units below. Control placement of stone so as to produce a uniform and continuous cover over the underlying layer.

.3 Handle Filter stone / Armour stone with care. Do not damage units during placement. Replace damaged or broken units at no additional cost to the contract.

.4 For all materials, grades, lines, dimensions, slopes and quantity of stones to be reviewed by the Departmental Representative before proceeding with the overlying layer.

.5 Replacement or resetting of Filter / Armour material lost or displaced due to storm will be the responsibility of the contractor with no additional cost to the contract.

.6 Choose stones and place them in such a way that the whole structure will be bonded and consolidated to as great an extent as nature of rock will allow. Rocks should vary in size so they don’t create steep slopes when placing the grade lines as indicated on the drawings.

.7 Armour stone is to be mechanically placed so as to knit together with adjacent and existing stones.

3.3 TOLERANCES

.1 Armour stone and Filter stone layers to be within 150mm of lines and grades shown.

3.4 PROTECTION

.1 Take into account anticipated weather conditions and degree of exposure of site in

setting requirements for protection of work and of both existing West and East Breakwaters.

.2 Schedule and carry out construction so that the filter layer is never built any longer than 10.0m out before they are protected by armour up to the top of filter stone elevation.

.3 The Contractor should note that the work site is subject to water level variations due to tidal action, wave action and ice flow.

.4 The Contractor will be responsible to replace any materials lost due to storms, tidal erosion or by their own activities.

3.5 SURVEY AND CROSS SECTIONS

.1 During construction the Contractor shall submit digital cross-sections compiled by a licensed surveyor to the Departmental Representative showing the following:

.1 Cross-sections as-built at stations every 10 meters along the breakwater centerline.

.2 The design cross-section layers showing proposed existing rubble mound, filter, armour stone and existing till (including toe excavation)in solid lines.

.3 Superimposed in dashed lines, elevations taken at 2 meter intervals perpendicular to the centerline and at top and toe of slopes, showing the existing filter, armour stone and existing material (including toe excavation) as constructed surfaces.

.4 Cross-sections to be referenced to the plan view of the breakwater with stations shown for reference.

.5 Cross-sections to be submitted at the end of the project (see 3.5.2) however, at any given time, the departmental representative may request to review the data in real time, onsite.

.6 Survey and reporting methodology are subject to review and approval prior to

commencement of the work. See mockup requirements in Clause 3.8.

.2 After construction is complete and before the Certificate of Substantial Completion will be paid, Contractor to submit detailed as-built survey plan to Departmental Representative to show that contract grades and elevations have been achieved. Provide an electronic file of the cross sections and two sets or prints. Divers may be required to assist with the survey for elevations required below chart datum. The following minimum requirements to be met:

.1 Elevations every 10 meters along the centerline of the breakwater and every 6 meters perpendicular to the centerline, on the end cone, top and bottom of slopes.

.2 All survey work to be in meters with elevations relative to chart datum (LNT) and coordinates referenced to NAD83 CSRS (Zone 20) PEI Double Stereographic Datum.

3.7 TEMPORARY NAVIGATIONAL BUOYS

.1 The Contractor is to maintain temporary buoys to mark the position of the outer end of the breakwater toe, temporary structures and silt fencing as construction proceeds. Refer to section 01 10 10 for type and location of buoys.

.2 The Contractor shall coordinate the buoy installation with the local harbour authority.

.3 The Contractor is responsible for all costs associated with the supply, installation and removal of all temporary navigational buoys.

.4 The contractor shall place temporary buoys such that the clear navigable width into the harbour is maximized however is never less than 20 meters wide.

3.8 SURVEY CONTROL TEST PRIOR TO WORK COMMENCEMENT

.1 Prior to commencing rubble mound breakwater construction, contractor is responsible to build a mock-up rubble mound structure which is a minimum of 10.0m long and to the cross section shown below. The cross section is shown as a minimum. The contractor may construct a larger mockup if desired but only upon approval by the departmental representative. An area at the project site will be designated by the departmental representative.

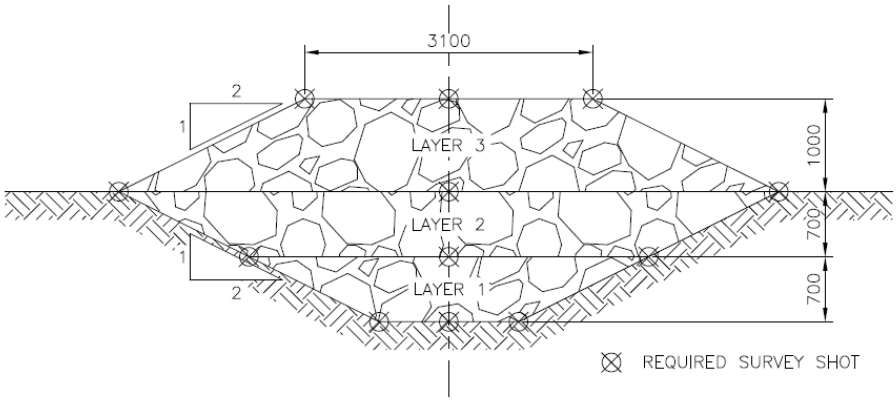

.2 The contractor is to demonstrate that the cross section shown above can be built to the tolerances listed in this specification and that the cross section can be surveyed at the required locations (i.e. indicated by an 'X' in the sketch above) for each layer.

.3 The mockup construction may be monitored by the departmental representative and surveyed independently for comparison.

.4 The contractor must produce digital survey files of the mockup survey for review and approval prior to commencing work on the new structure.

.5 Material used for layers 1, 2, and 3 may all be the same material however they must be a minimum of 800-1000kg filter stone size.

Material sourced for the construction of the new breakwater may be used in the mock-up and reused.

END OF SECTION