CANADIAN FOOD INSPECTION AGENCY

AIR HANDLING UNIT/ EXHAUST MANIFOLD REPLACEMENT

3155 WILLINGDON GREEN, BURNABY, B.C. V5G 4P2

DRAWING LIST

ARCHITECTURAL

A100 - COVER SHEET, SITE LOCATION AND PROJECT INFORMATION
A101 - NEW SITE PLAN
A102 - CRAWL SPACE DEMOLITION PLAN
A103 - PARTIAL MAIN FLOOR DEMOLITION PLAN
A104 - PARTIAL CRAWL SPACE NEW PLAN
A105 - PARTIAL MAIN FLOOR NEW PLAN
A106 - PARTIAL SECOND FLOOR PLAN
A107 - MAIN ROOF DEMOLITION AND NEW PLAN
A108 - NORTH AND EAST ELEVATIONS
A109 - SOUTH AND WEST ELEVATIONS
A110 - PLAN DETAILS - AHU 101 / 102
A111 - PLAN DETAILS - AHU 103 DUCTS SCREEN
A112 - DETAILS
A113 - DETAILS

A201 - SITE PLAN
A202 - EXISTING MAIN FLOOR HOOD EXHAUST LOCATIONS AND PHASING PLAN
A203 - EXISTING SECOND FLOOR PLAN HOOD EXHAUST LOCATIONS AND PHASING PLAN
A204 - EXISTING & DEMOLITION - MAIN ROOF PLAN
A204.1 - EXISTING AND DEMOLITION - PENTHOUSE ROOF PLAN
A205 - NEW MAIN ROOF PLAN
A206 - NORTH PENTHOUSE EXISTING/DEMOLITION AND NEW PLANS
A207 - CENTRE PENTHOUSE EXISTING/DEMOLITION AND NEW PLANS
A208 - SOUTH PENTHOUSE EXISTING/DEMOLITION AND NEW PLANS
A209 - NEW NORTH AND EAST ELEVATIONS
A210 - NEW SOUTH AND WEST ELEVATIONS
A211 - SOUTH/CENTER/NORTH PENTHOUSE ELEVATIONS (SHOWING DUCT SLEEVES THROUGH WALL)
A212 - SOUTH/CENTER/NORTH PENTHOUSE ELEVATIONS (SHOWING DUCT WORK INFRONT)
A213 - ELEVATION, SECTION AND PLAN DETAILS
A214 - SECTION DETAILS
A215 - SECTION DETAILS
A216 - CROSS OVER STAIRS PLANS SECTIONS AND DETAILS
A217 - STAINLESS STEEL SLEEVE AND PLATE SCHEDULE

STRUCTURAL

S101 - GENERAL NOTES AND TYPICAL DETAILS
S102 - AHU 101 & 102 FRAMING PLANS, CONCRETE PAD PLAN AND DETAILS
S103 - AHU 101 & 102 FRAMING ELEVATION, SECTIONS AND DETAILS
S104 - AHU 103 ROOF FRAMING PLAN AND DETAILS
S201 - GENERAL NOTES AND TYPICAL DETAILS
S202 - GENERAL NOTES AND TYPICAL DETAILS

MECHANICAL

M101 - COVER PAGE
M102 - CRAWL SPACE DEMOLITION PLAN - MECHANICAL
M103 - PARTIAL MAIN FLOOR DEMOLITION PLAN - HVAC
M104 - PARTIAL MAIN FLOOR DEMOLITION PLAN - PIPING LAYOUT
M105 - PARTIAL MAIN FLOOR PLAN - HVAC
M106 - CRAWL SPACE FLOOR PLAN - MECHANICAL
M107 - PARTIAL MAIN FLOOR PLAN - PIPING LAYOUT
M108 - PARTIAL SECOND FLOOR PLAN - MECHANICAL
M109 - ROOF PLAN - MECHANICAL
M110 - SECTIONS - MECHANICAL
M111 - SECTIONS AND ELEVATIONS
M112 - SECTIONS, ELEVATIONS AND DETAILS
M113 - AIR HANDLING UNIT DETAILS, HYDRONIC SCHEMATIC
M-201 - EXISTING EXHAUST FAN INFORMATION, MECHANICAL LEGEND, GENERAL NOTES, AND DRAWING LIST
M202 - ROOF PLAN - DEMOLITION
M203 - ROOF PLAN - NEW CONSTRUCTION
M204 - NORTH PENTHOUSE AND PARTIAL ROOF PLAN AND SCHEMATIC - DEMOLITION
M205 - NORTH PENTHOUSE AND PARTIAL ROOF PLAN AND SCHEMATIC - NEW CONSTRUCTION
M206 - CENTRE PENTHOUSE SOUTHEAST AND PARTIAL ROOF PLAN AND SCHEMATIC - DEMOLITION
M207 - CENTRE PENTHOUSE SOUTHEAST AND PARTIAL ROOF PLAN AND SCHEMATIC, - NEW CONSTRUCTION
M208 - CENTRE PENTHOUSE NORTHWEST AND PARTIAL ROOF PLAN AND SCHEMATIC, - DEMOLITION
M209 - CENTRE PENTHOUSE NORTHWEST AND PARTIAL ROOF PLAN AND SCHEMATIC, - NEW CONSTRUCTION
M210 - SOUTH PENTHOUSE AND PARTIAL ROOF PLAN AND SCHEMATIC - DEMOLITION
M211 - SOUTH PENTHOUSE AND PARTIAL ROOF PLAN AND SCHEMATIC - NEW CONSTRUCTION
M212 - TYPICAL INSTALLATION DETAILS

ELECTRICAL

E.0.01 - ELECTRICAL GENERAL NOTES, LEGENDS AND DETAILS
E.1.01 - GROUND FLOOR DEMOLITION LAYOUT
E.1.02 - GROUND FLOOR POWER LAYOUT
E.1.03 - CRAWL SPACE POWER LAYOUT
E.1.04 - PENTHOUSE PLAN DEMOLITION LAYOUT
E.1.05 - PENTHOUSE POWER LAYOUT
E.2.01 - MCC AND E-ROOM ELEVATION
E.2.02 - PANEL SCHEDULE
E.5.01 - SINGLE LINE DIAGRAM

CIVIL

C101 - CIVIL SITE PLAN
C102 - CIVIL CONSTRUCTION DETAILS

GENERAL DEMOLITION NOTES

1. DEMOLITION DRAWING ONLY SHOWS THE GENERAL SCOPE OF DEMOLITION. ALSO REFER TO OTHER ARCHITECTURAL DETAIL DRAWINGS, MECHANICAL & ELECTRICAL DRAWINGS FOR FULL SCOPE OF DEMOLITION WORKS REQUIRED TO PRODUCE NEW LAYOUT.
2. ALL DEMOLISHED MATERIAL AND DEBRIS TO BE REMOVED PROMPTLY FROM SITE AND DISPOSED OF IN A LEGAL MANNER.
3. SELLING OF ANY MATERIALS ON SITE IS NOT PERMITTED.
4. MAKE GOOD DAMAGED AREA AND FIXTURES OR REPLACED WITH NEW WHICH ARE TO BE RETAINED AS SHOWN IN DRAWING.
5. DEMOLISH ALL EXPOSED & HIDDEN ELECTRICAL, MECHANICAL & PLUMBING FIXTURES, ENCLOSED CONDUITS AND PIPINGS, & OTHER FIXTURES AND FINISHES ASSOCIATED WITH DEMOLITION OF WALLS.
6. REMOVE ALL EXISTING FINISHES WHICH ARE NOT INDICATED AS EXISTING TO STAY. MAKE GOOD SUBSTRATE TO RECEIVE NEW FINISHES.

GENERAL CONSTRUCTION NOTES

1. THESE NOTES APPLY TO ALL DRAWINGS.
2. THIS IS A COPYRIGHT DRAWING AND DESIGN, AND SHALL NOT BE USED, REPRODUCED OR REVISED WITHOUT WRITTEN PERMISSION.
3. CHECK AND VERIFY ALL DIMENSIONS ON SITE AND REPORT ALL ERRORS AND OMISSIONS TO THE DEPARTMENTAL REPRESENTATIVES PRIOR TO COMMENCING WORK.
4. THESE DRAWINGS ARE NOT TO BE SCALED.
5. ALL DIMENSIONS, UNLESS OTHERWISE NOTED, ARE METRIC.
6. ALL WALL DIMENSIONS ARE TO THE CENTRE LINE OF STUD UNLESS OTHERWISE NOTED.
7. TOUCH UP AND MAKE GOOD ALL EXISTING WALLS TO REMAIN SUITABLE TO RECEIVE NEW PAINT FINISH.
10. FIRESTOP ALL EXISTING AND NEW SERVICE PENETRATIONS THROUGH FLOOR SLAB AND VERTICAL FIRE SEPARATION
11. PROVIDE X-RAY TO EXISTING FLOOR SLAB PRIOR TO CORING FOR NEW SERVICE PENETRATION

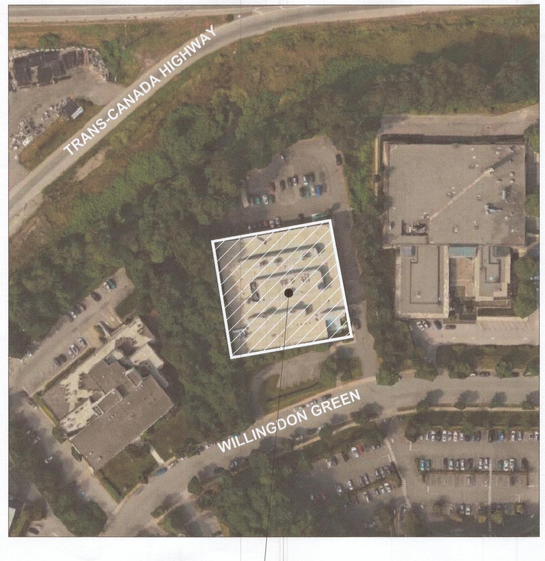

AREA OF CONSTRUCTION

1 / A100 SITE LOCATION PLAN
NTS

PROJECT NORTH

PROJECT TEAM

ARCHITECTURAL
CHERNOFF THOMPSON ARCHITECTS
1340-1075 WEST GERGIA ST.
VANCOUVER, BC V6E 3C9
PH. 604 669-9460
CONTACT: RUSS CHERNOFF

STRUCTURAL
READ JONES CHRISTOFFERSEN LTD.
1285 W BROADWAY #300
VANCOUVER, BC V6H 3X8
PH. 604 738-0048
CONTACT: JEFF COBETT

MECHANICAL
INTEGRAL GROUP
200 GRANVILLE ST
VANCOUVER, BC V6C 1S4
PH. (604) 687-1800
CONTACT: MLADEN MARKOVIC

ELECTRICAL
MORRISON HERSHFIELD
4321 STILL CREEK DR #310
BURNABY, BC V5C 6S7
PH. 604 687 1800
CONTACT: BORIANA ARGUIROVA

CIVIL
URBAN SYSTEMS
1250-13401 108 AVE
SURREY BC, V3T 5T3
PH. 604 235-1701
CONTACT: MARK DOWNING

LEGAL DESCRIPTION

LOT 54, DISTRICT LOT 70, GROUP 1,
65869, NEW WESTMINSTER DISTRICT

BUILDING CODE ANALYSIS

BLDG FLOOR AREA: 2282.4m²
FIRST FLOOR AREA: 2277.6m²
2ND FLOOR AREA: 2252.0m²
BUILDING HEIGHT: 2 STOREY

MAJOR OCCUPANCY - F2
SUBSIDIARY OCCUPANCY - D
NUMBER OF STREETS - 3

APPLICABLE CODE: 2010 NBC
THE BUILDING WAS DESIGNED UNDER PART 3

Public Works and Government Services Canada / Travaux publics et Services gouvernementaux Canada
REAL PROPERTY SERVICES
Pacific Region
SERVICES IMMOBILIERS
Région de Pacifique

REGISTERED ARCHITECT RUSSELL MICHAEL CHERNOFF VANCOUVER BRITISH COLUMBIA

Revision/ Revision	Description/Description	Date/Date
5		
4		
3	ISSUED FOR TENDER	2017-07-13
2	ISSUED FOR 100% CD	2017-05-09
1	PRE-TENDER CD FOR CLIENT REVIEW	2017-04-05
0	50% CD REVIEW	2017-03-03

Client/client
CANADIAN FOOD INSPECTION AGENCY

Project title/Titre du projet
3155 WILLINGDON GREEN BURNABY, BC

CFIA AHU REPLACEMENT

Consultant Signature Only

Designed by/Concept par
RC

Drawn by/Dessine par
LM 2016-03-09

PWGSC Project Manager/Administrateur de Projets TPSGC

Regional Manager, Architectural and Engineering Services / Gestionnaire régionale, Services d'architectural et de génie, TPSGC

Drawing title/Titre du dessin
COVER SHEET, SITE LOCATION AND PROJECT INFORMATION

Project No./No. du projet	Sheet/Feuille	Revision no./ La Révision no.
39903-150591	A100	3

PWGSC – A1 – 841X594

0 10 20 30 40 50 60 70 80 90 100mm

DM5XXXXXX

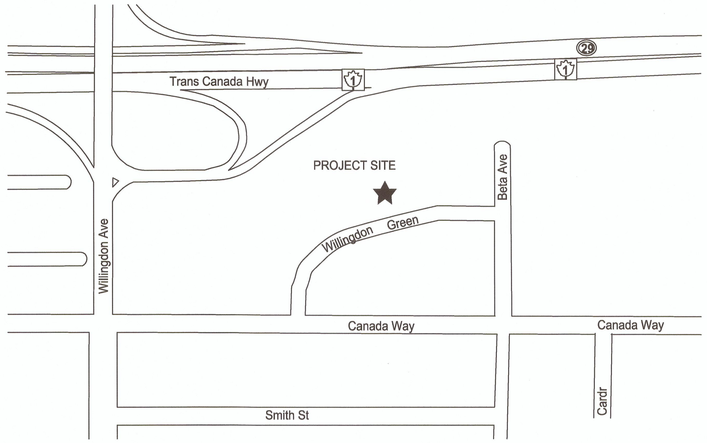

2 / A101 **LOCATION PLAN** NTS

NORTH

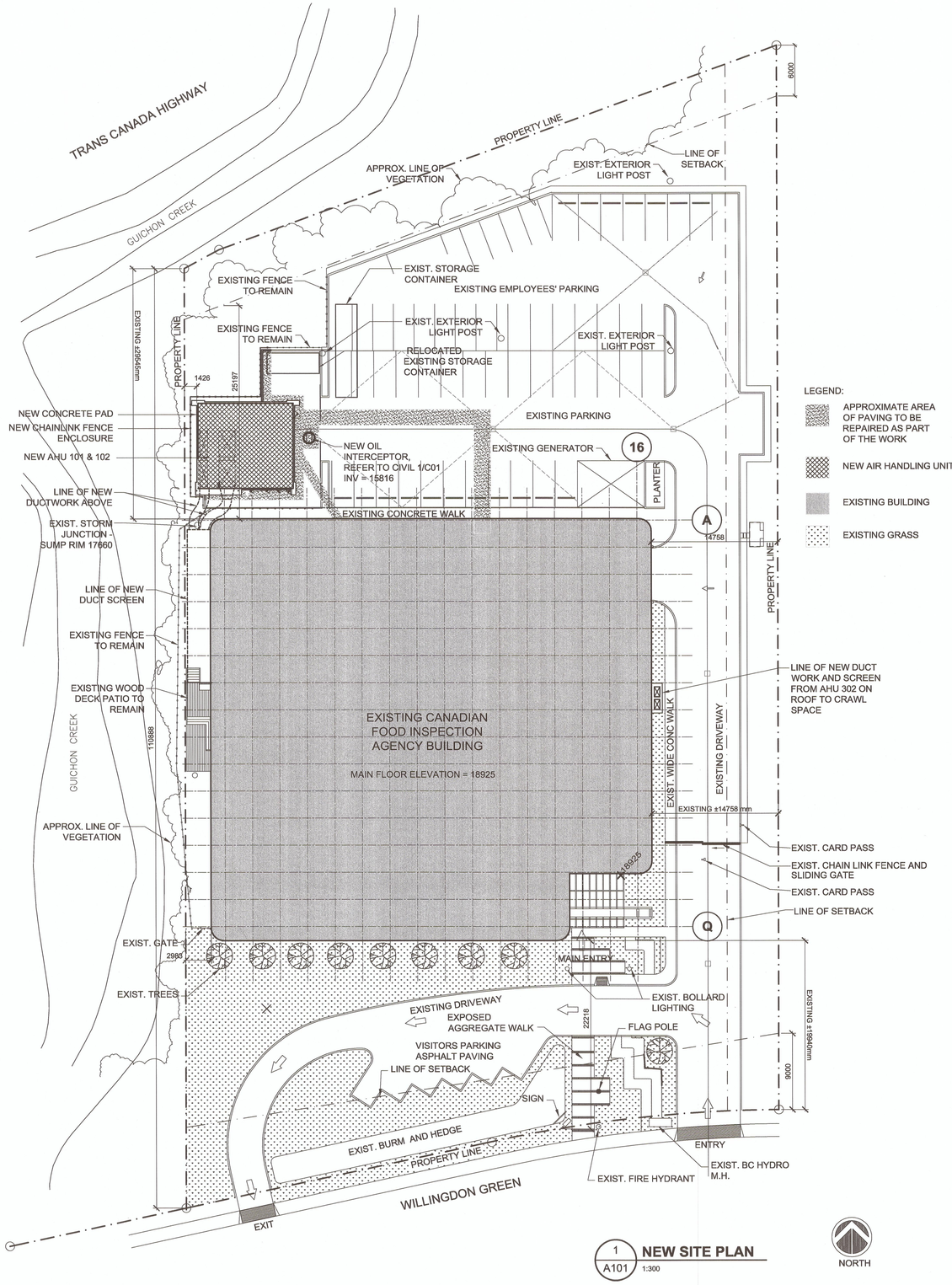

1 / A101 **NEW SITE PLAN** 1:300

NORTH

LEGEND:

- APPROXIMATE AREA OF PAVING TO BE REPAIRED AS PART OF THE WORK
- NEW AIR HANDLING UNIT
- EXISTING BUILDING
- EXISTING GRASS

ARCHITECTURAL SYMBOLS:

1 / A-00 **DRAWING TITLE** 1 : 100 — DRAWING IDENTIFICATION

A / 1 — GRID LINES

000.000 — ELEVATION/SECT. MARKERS

1 / A-00 — SECTION MARKERS

1 / A-00 — BUILDING SECTION

A, B, C, D / 1 / A-00 — INTERIOR ELEVATION MARKERS

1 / A-00 — DETAIL REFERENCE

NEW ELEV.

EXIST ELEV. / NEW ELEV. — PLAN ELEVATION MARKERS

D — WALL TYPE IDENTIFICATION

00 — WINDOW TYPE IDENTIFICATION

000a — DOOR NUMBER IDENTIFICATION

ROOM NAME / 107 — ROOM NAME & NUMBER IDENTIFICATION

M2A / A01 — SCHEDULE REFERENCE

2440 — CEILING HEIGHT IDENTIFICATION

1 — CONSTRUCTION NOTE REFERENCE

Public Works and Government Services Canada / Travaux publics et Services gouvernementaux Canada

REAL PROPERTY SERVICES
Pacific Region
SERVICES IMMOBILIERS
Région de Pacifique

REGISTERED ARCHITECT — RUSSELL MICHAEL CHERNOFF — VANCOUVER — BRITISH COLUMBIA

5		
4		
3	ISSUED FOR TENDER	2017-07-13
2	ISSUED FOR 100% CD	2017-05-09
1	PRE-TENDER CD FOR CLIENT REVIEW	2017-04-05
0	50% CD REVIEW	2017-03-03
Revision/ Revision	Description/Description	Date/Date

Client/client

CANADIAN FOOD INSPECTION AGENCY

Project title/Titre du projet

3155 WILLINGDON GREEN BURNABY, BC

CFIA EXHAUST MANIFOLD REPLACEMENT

Consultant Signature Only

Designed by/Concept par: **RC**

Drawn by/Dessine par: **LM**

PWGSC Project Manager/Administrateur de Projets TPSGC

Regional Manager, Architectural and Engineering Services Gestionnaire régionale, Services d'architectural et de génie, TPSGC

Drawing title/Titre du dessin

NEW SITE PLAN

Project No./No. du projet	Sheet/ Feuille	Revision no./ La Révision no.
39903-150591	A101	3

PWGSC – A1 – 841X594

0 10 20 30 40 50 60 70 80 90 100mm

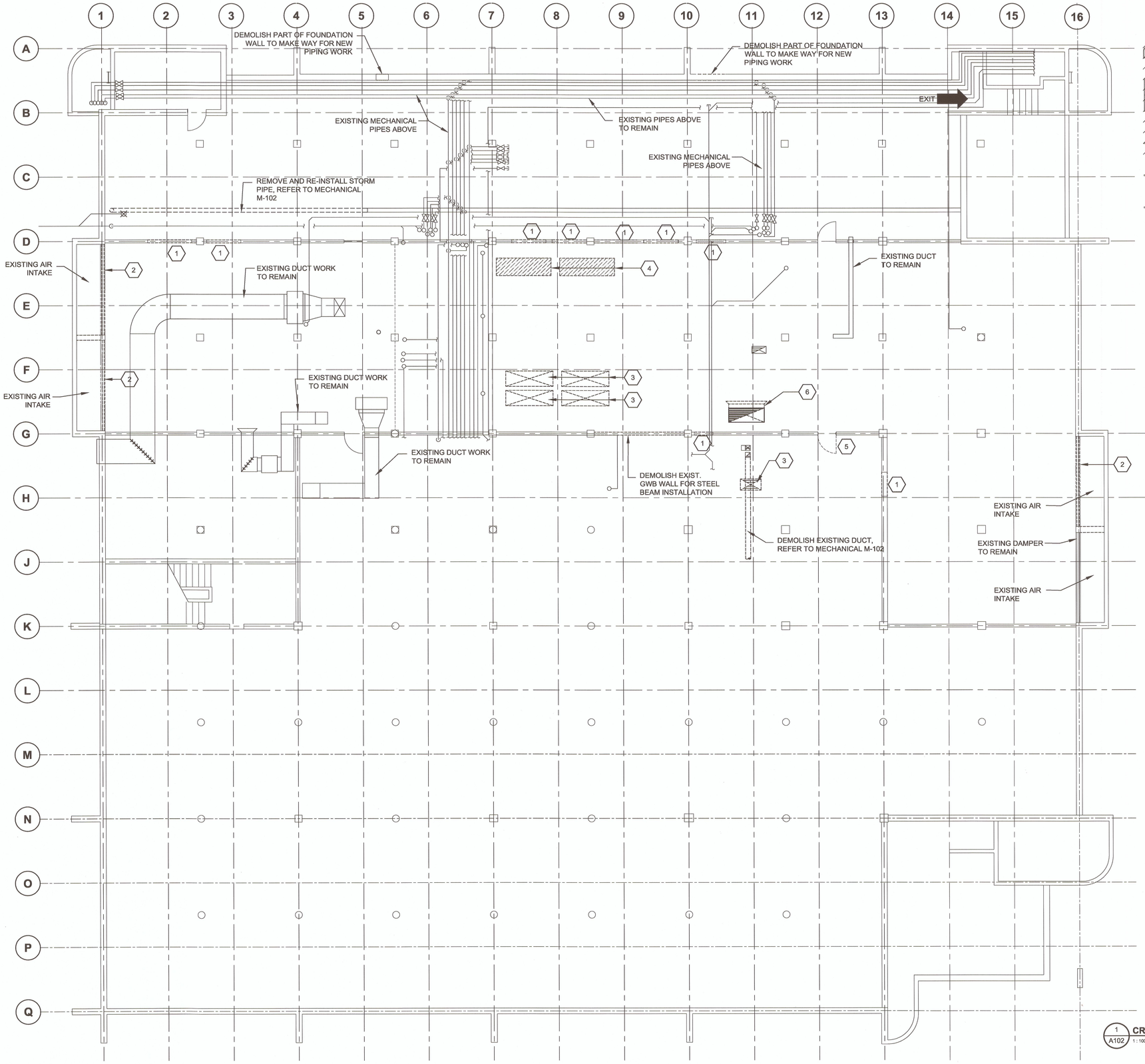

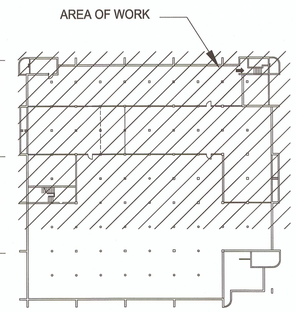

KEY PLAN
N.T.S

NORTH

DEMOLITION SCOPE LEGEND:

1. DEMOLISH PART OF EXISTING GYPSUM WALL BOARD WALL TO MAKE WAY FOR NEW DUCT WORK, SEE DETAIL 2/A113 FOR TYPICAL PIPE THROUGH EXISTING WALL
2. DEMOLISH ENTIRE EXISTING DAMPER AND MAKE GOOD WALL READY TO RECEIVE NEW LOUVER AND DUCT, REFER TO MECHANICAL DRAWING M-102.
3. LINE OF NEW OPENING IN FLOOR SLAB ABOVE
4. EXISTING OPENINGS IN CONCRETE SLAB ABOVE TO BE INFILLED, SEE STRUCTURAL 1/S102 AND 3/A104
5. RELOCATED EXISTING DOOR AND DOOR FRAME
6. REMOVE EXISTING DUCT WORK. RETAIN OPENING TO MAIN FLOOR SLAB , REFER TO MECHANICAL M-102

REGISTERED ARCHITECT
RUSSELL MICHAEL GIFFORD
VANCOUVER
BRITISH COLUMBIA

Revision/ Revision	Description/Description	Date/Date
5		
4		
3	ISSUED FOR TENDER	2017-07-13
2	ISSUED FOR 100% CD	2017-05-09
1	PRE-TENDER CD FOR CLIENT REVIEW	2017-04-05
0	50% CD REVIEW	2017-03-03

Public Works and Government Services Canada / Travaux publics et Services gouvernementaux Canada

REAL PROPERTY SERVICES
Pacific Region
SERVICES IMMOBILIERS
Région de Pacifique

Client/client

CANADIAN FOOD INSPECTION AGENCY

Project title/Titre du projet

3155 WILLINGDON GREEN BURNABY, BC

CFIA AHU REPLACEMENT

Consultant Signature Only

Designed by/Concept par
RC

Drawn by/Dessine par
LM

PWGSC Project Manager/Administrateur de Projets TPSGC

Regional Manager, Architectural and Engineering Services Gestionnaire régionale, Services d'architectural et de génie, TPSGC

Drawing title/Titre du dessin

CRAWL SPACE DEMOLITION PLAN

Project No./No. du projet	Sheet/ Feuille	Revision no./ La Révision no.
39903-150591	**A102**	**3**

PWGSC – A1 – 841X594

0 10 20 30 40 50 60 70 80 90 100mm

DM5XXXXXX

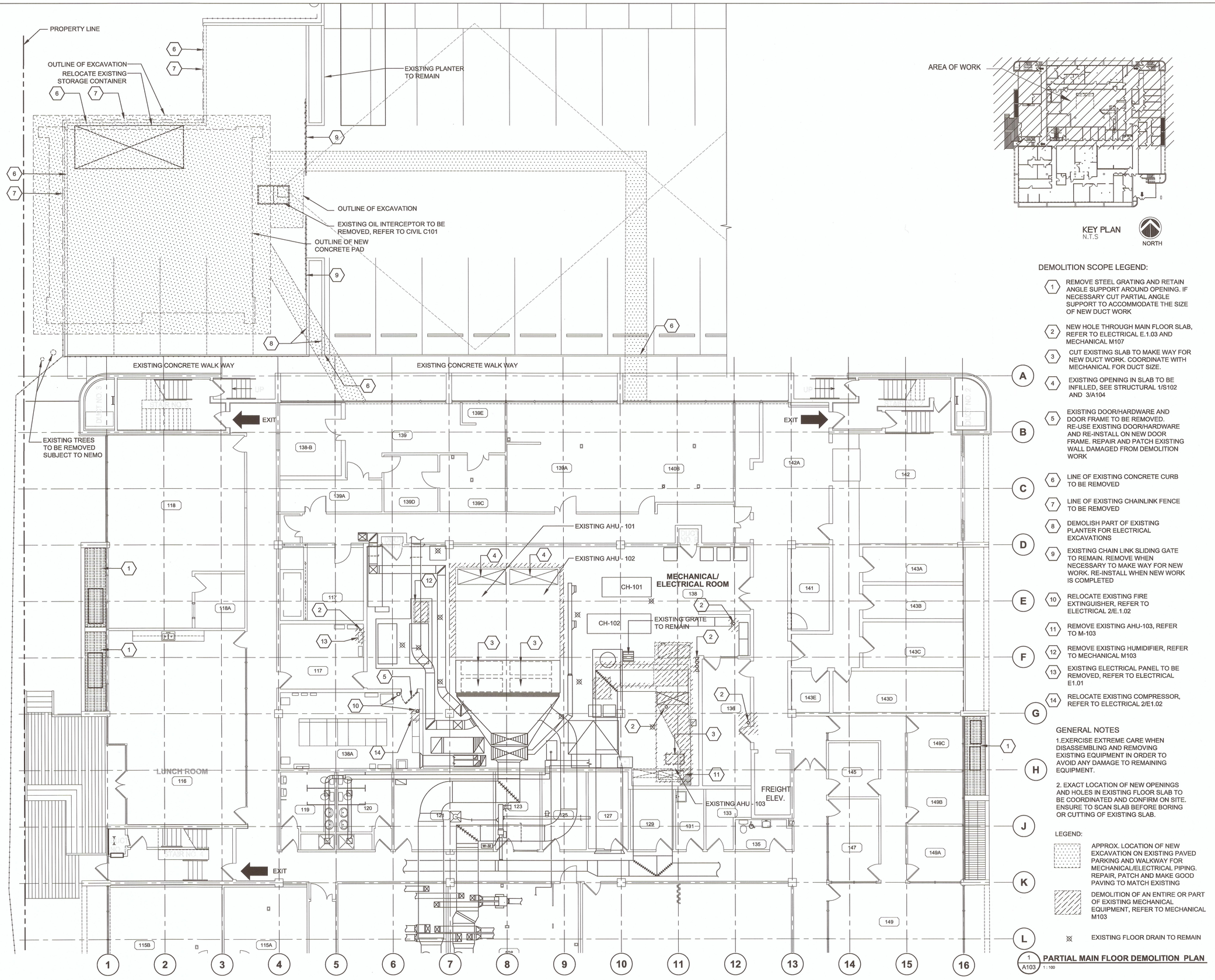

AREA OF WORK

KEY PLAN
N.T.S

NORTH

DEMOLITION SCOPE LEGEND:

1. REMOVE STEEL GRATING AND RETAIN ANGLE SUPPORT AROUND OPENING. IF NECESSARY CUT PARTIAL ANGLE SUPPORT TO ACCOMMODATE THE SIZE OF NEW DUCT WORK
2. NEW HOLE THROUGH MAIN FLOOR SLAB, REFER TO ELECTRICAL E.1.03 AND MECHANICAL M107
3. CUT EXISTING SLAB TO MAKE WAY FOR NEW DUCT WORK. COORDINATE WITH MECHANICAL FOR DUCT SIZE.
4. EXISTING OPENING IN SLAB TO BE INFILLED, SEE STRUCTURAL 1/S102 AND 3/A104
5. EXISTING DOOR/HARDWARE AND DOOR FRAME TO BE REMOVED. RE-USE EXISTING DOOR/HARDWARE AND RE-INSTALL ON NEW DOOR FRAME. REPAIR AND PATCH EXISTING WALL DAMAGED FROM DEMOLITION WORK
6. LINE OF EXISTING CONCRETE CURB TO BE REMOVED
7. LINE OF EXISTING CHAINLINK FENCE TO BE REMOVED
8. DEMOLISH PART OF EXISTING PLANTER FOR ELECTRICAL EXCAVATIONS
9. EXISTING CHAIN LINK SLIDING GATE TO REMAIN. REMOVE WHEN NECESSARY TO MAKE WAY FOR NEW WORK. RE-INSTALL WHEN NEW WORK IS COMPLETED
10. RELOCATE EXISTING FIRE EXTINGUISHER, REFER TO ELECTRICAL 2/E.1.02
11. REMOVE EXISTING AHU-103, REFER TO M-103
12. REMOVE EXISTING HUMIDIFIER, REFER TO MECHANICAL M103
13. EXISTING ELECTRICAL PANEL TO BE REMOVED, REFER TO ELECTRICAL E1.01
14. RELOCATE EXISTING COMPRESSOR, REFER TO ELECTRICAL 2/E1.02

GENERAL NOTES

1.EXERCISE EXTREME CARE WHEN DISASSEMBLING AND REMOVING EXISTING EQUIPMENT IN ORDER TO AVOID ANY DAMAGE TO REMAINING EQUIPMENT.

2. EXACT LOCATION OF NEW OPENINGS AND HOLES IN EXISTING FLOOR SLAB TO BE COORDINATED AND CONFIRM ON SITE. ENSURE TO SCAN SLAB BEFORE BORING OR CUTTING OF EXISTING SLAB.

LEGEND:

- APPROX. LOCATION OF NEW EXCAVATION ON EXISTING PAVED PARKING AND WALKWAY FOR MECHANICAL/ELECTRICAL PIPING. REPAIR, PATCH AND MAKE GOOD PAVING TO MATCH EXISTING
- DEMOLITION OF AN ENTIRE OR PART OF EXISTING MECHANICAL EQUIPMENT, REFER TO MECHANICAL M103
- EXISTING FLOOR DRAIN TO REMAIN

1 A103 **PARTIAL MAIN FLOOR DEMOLITION PLAN**
1 : 100

PWGSC – A1 – 841X594

0 10 20 30 40 50 60 70 80 90 100mm

DM5XXXXXX

Public Works and Government Services Canada / Travaux publics et Services gouvernementaux Canada

REAL PROPERTY SERVICES
Pacific Region
SERVICES IMMOBILIERS
Région du Pacifique

REGISTERED ARCHITECT RUSSELL MICHAEL HINDMARCH VANCOUVER BRITISH COLUMBIA

Revision/ Révision	Description/Description	Date/Date
5		
4		
3	ISSUED FOR TENDER	2017-07-13
2	ISSUED FOR 100% CD	2017-05-09
1	PRE-TENDER CD FOR CLIENT REVIEW	2017-04-05
0	50% CD REVIEW	2017-03-03

Client/client

CANADIAN FOOD INSPECTION AGENCY

Project title/Titre du projet

3155 WILLINGDON GREEN BURNABY, BC

CFIA AHU REPLACEMENT

Consultant Signature Only

Designed by/Concept par
RC

Drawn by/Dessiné par
LM

PWGSC Project Manager/Administrateur de Projets TPSGC

Regional Manager, Architectural and Engineering Services / Gestionnaire régional, Services d'architecture et d'ingénierie TPSGC

Drawing title/Titre du dessin

PARTIAL MAIN FLOOR DEMOLITION PLAN

Project No./No. du projet	Sheet/ Feuille	Revision no./ No. de révision
39903-150591	**A103**	**3**

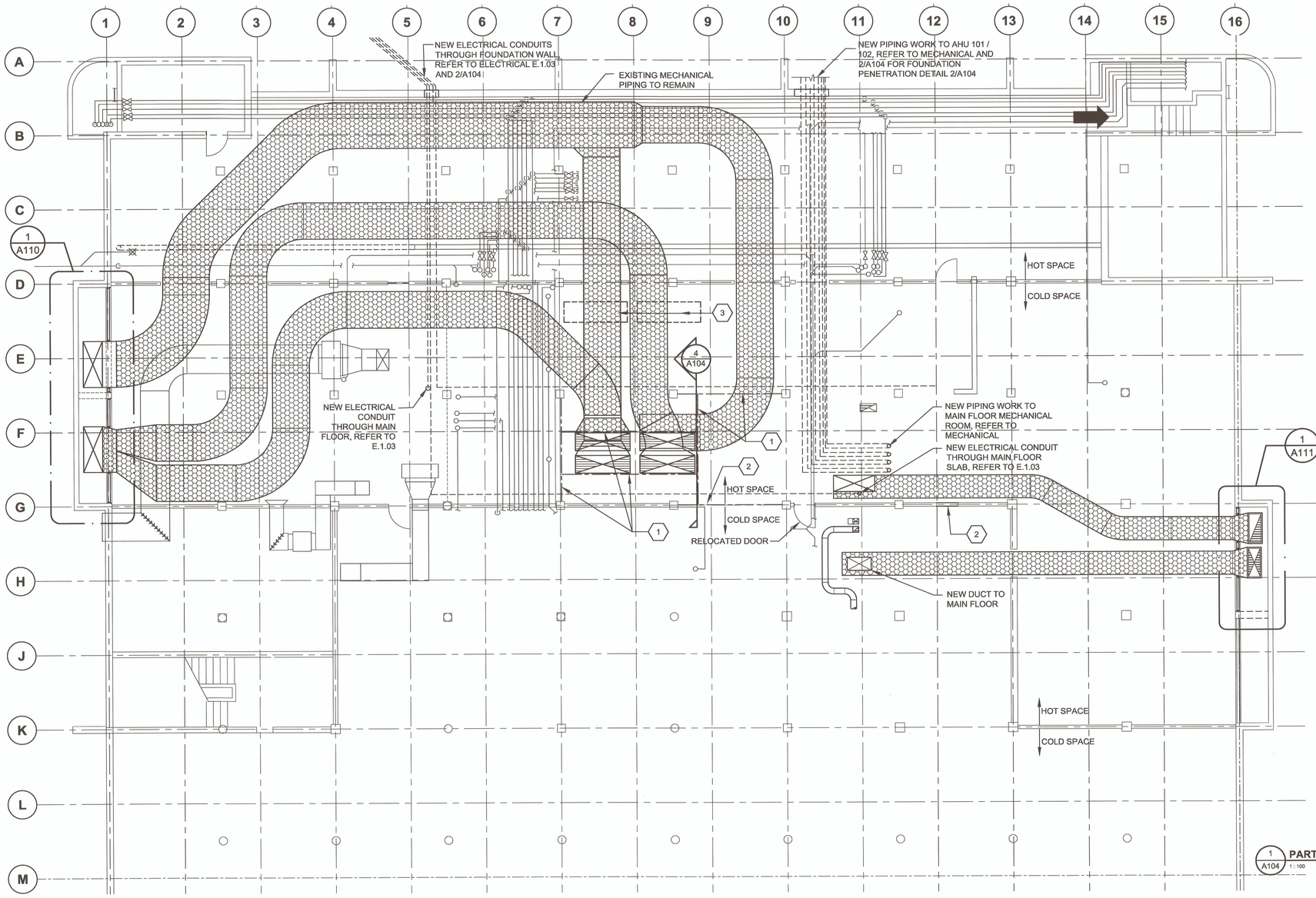

1 A104 **PARTIAL CRAWL SPACE NEW PLAN** 1 : 100

NORTH

AREA OF WORK

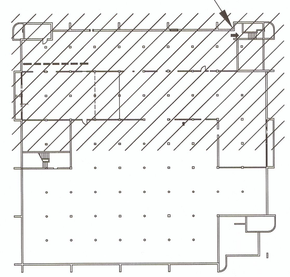

KEY PLAN
N.T.S

NORTH

NEW CONSTRUCTION SCOPE LEGEND:

1. STEEL BEAM SUPPORT, REFER TO STRUCTURAL 1/S102
2. NEW STEEL BEAM SUPPORT IN EXISTING WALL. REPAIR AND MAKE GOOD AFTER INSTALLATION OF NEW STEEL BEAM
3. LINE OF NEW INFILLED FLOOR SLAB ABOVE
4. NEW SUPPLY DUCT TO MAIN FLOOR ABOVE
4. NEW SUPPLY DUCT TO MAIN FLOOR ABOVE

LEGEND:

NEW DUCT WORK, REFER TO MECHANICAL DRAWING M-106

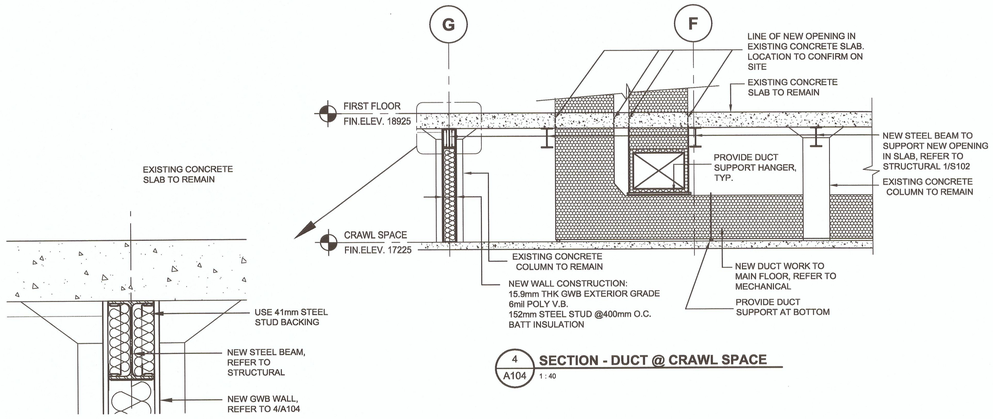

4 A104 **SECTION - DUCT @ CRAWL SPACE** 1 : 40

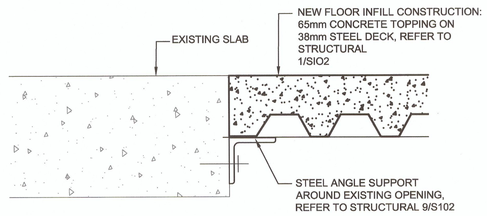

3 A104 **DETAIL - FLOOR INFILL** 1 : 5

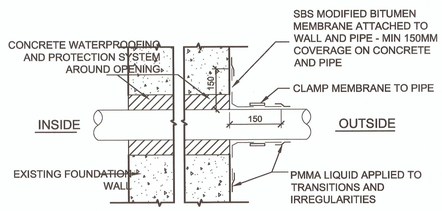

2 A104 **DETAIL - FOUNDATION PENETRATION** 1 : 5

Public Works and Government Services Canada / Travaux publics et Services gouvernementaux Canada

REAL PROPERTY SERVICES
Pacific Region
SERVICES IMMOBILIERS
Région de Pacifique

REGISTERED ARCHITECT
RUSSELL MICHAEL OVERDORF
VANCOUVER
BRITISH COLUMBIA

Revision/ Revision	Description/Description	Date/Date
5		
4		
3	ISSUED FOR TENDER	2017-07-13
2	ISSUED FOR 100% CD	2017-05-09
1	PRE-TENDER CD FOR CLIENT REVIEW	2017-04-05
0	50% CD REVIEW	2017-03-03

Client/client

CANADIAN FOOD INSPECTION AGENCY

Project title/Titre du projet

3155 WILLINGDON GREEN BURNABY, BC

CFIA AHU REPLACEMENT

Consultant Signature Only

Designed by/Concept par
RC

Drawn by/Dessine par
LM 11/09/2015

PWGSC Project Manager/Administrateur de Projets TPSGC

Regional Manager, Architectural and Engineering Services / Gestionnaire régionale, Services d'architectural et de génie, TPSGC

Drawing title/Titre du dessin

PARTIAL CRAWL SPACE NEW PLAN

Project No./No. du projet	Sheet/ Feuille	Revision no./ La Révision no.
39903-150591	**A104**	**3**

PWGSC – A1 – 841X594

0 10 20 30 40 50 60 70 80 90 100mm

DM5XXXXXX

PROPERTY LINE

RELOCATED EXISTING STORAGE CONTAINER

LINE OF NEW UNDERGROUND MECHANICAL PIPE WORK, REFER TO M105

NEW OIL INTERCEPTOR, REFER TO CIVIL 1/C101

NEW CONCRETE PAD, REFER TO STRUCTURAL 4/S102

EXISTING EMPLOYEES' PARKING

NEW AHU-101/102

LINE OF NEW UNDERGROUND ELECTRICAL PIPE WORK, REFER TO E.1.03

LINE OF NEW UNDERGROUND MECHANICAL PIPE WORK, REFER TO M105

LINE OF DUCT ABOVE

EXISTING CONCRETE WALK WAY

EXISTING TREES TO BE REMOVED, SUBJECT TO NEMO

LINE OF DUCT SCREEN ABOVE

LINE OF DUCT TO ABOVE

EXISTING CHAINLINK FENCE TO REMAIN

EXISTING PATIO

LUNCH ROOM 116

MECHANICAL/ ELECTRICAL ROOM 138

CH-101

CH-102

EXISTING BREAKER 138A

FREIGHT ELEV.

EXIT

DUCT NO. 1

DUCT NO. 2

DN

UP

1000 1426 300 686 745 10409 600 639 3419

AREA OF WORK

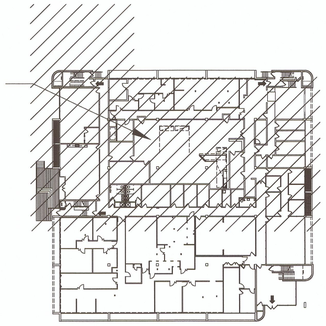

KEY PLAN
N.T.S

NORTH

NEW CONSTRUCTION SCOPE LEGEND:

1. NEW STEEL GRATING ON EXISTING STRUCTURAL SUPPORT. NEW STEEL GRATING TO ACCOMMODATE NEW DUCTWORK THROUGH CRAWL SPACE.
2. NEW FLOOR INFILL SEE DETAIL 3/A104
3. NEW RELOCATED/ROTATED DOOR ON NEW PRESSED STEEL FRAME
4. NEW CONCRETE CURB EDGE
5. NEW CHAINLINK FENCE
6. NEW ELECTRICAL PANEL, REFER TO ELECTRICAL E.1.02. PROVIDE PLYWOOD BACKING, TYPICAL
7. NEW MECHANICAL PIPE WORK DOWN TO CRAWL SPACE, REFER TO M-107
8. NEW MECHANICAL PIPE WORK TO SECOND FLOOR CEILING SPACE, REFER TO M-107
9. NEW MECHANICAL TANK ON EXISTING HOUSEKEEPING PAD, REFER TO MECHANICAL M-107
10. NEW 100mm HIGH HOUSEKEEPING PAD FOR PUMP STATION, REFER TO MECHANICAL M107. COORDINATE WITH MECHANICAL FOR SIZE
11. NEW HUMIDIFIER, REFER TO MECHANICAL, M107
12. NEW SUPPLY DUCT DOWN TO CRAWL SPACE, REFER TO MECHANICAL M105

NEW SUPPLY DUCT TO CRAWL SPACE, REFER TO MECHANICAL

NEW DUCT SCREEN

LEGEND:

APPROXIMATE AREA OF NEW PAVING, REFER TO CIVIL DRAWING C102 FOR NEW PAVEMENT STRUCTURE DETAIL

NEW AIR HANDLING UNIT - AHU-101 / 102, REFER TO MECHANICAL DRAWING M113

NEW CONCRETE HOUSEKEEPING PAD, REFER TO STRUCTURAL DRAWING 4/S102

EXISTING FLOOR DRAIN TO REMAIN

1 A105 PARTIAL MAIN FLOOR NEW PLAN
1 : 100

NORTH

0 10 20 30 40 50 60 70 80 90 100mm

PWGSC – A1 – 841X594

Public Works and Government Services Canada / Travaux publics et Services gouvernementaux Canada

REAL PROPERTY SERVICES
Pacific Region
SERVICES IMMOBILIERS
Région du Pacifique

REGISTERED ARCHITECT RUSSELL MICHAEL CHUBOFF VANCOUVER BRITISH COLUMBIA

Revision/ Revision	Description/Description	Date/Date
5		
4		
3	ISSUED FOR TENDER	2017-07-13
2	ISSUED FOR 100% CD	2017-05-09
1	PRE-TENDER CD FOR CLIENT REVIEW	2017-04-05
0	50% CD REVIEW	2017-03-03

Client/client

CANADIAN FOOD INSPECTION AGENCY

Project title/Titre du projet

3155 WILLINGDON GREEN BURNABY, BC

CFIA AHU REPLACEMENT

Consultant Signature Only

Designed by/Concept par
RC

Drawn by/Dessine par
LM

PWGSC Project Manager/Administrateur de Projets TPSGC

Regional Manager, Architectural and Engineering Services / Gestionnaire régional, Architecture et ingénierie, TPSGC

Drawing title/Titre du dessin

PARTIAL MAIN FLOOR NEW PLAN

Project No./No. du projet	Sheet/Feuille	Revision no./ No. révision
39903-150591	A105	3

DM5XXXXXX

Public Works and Government Services Canada
Travaux publics et Services gouvernementaux Canada

REAL PROPERTY SERVICES
Pacific Region
SERVICES IMMOBILIERS
Région de Pacifique

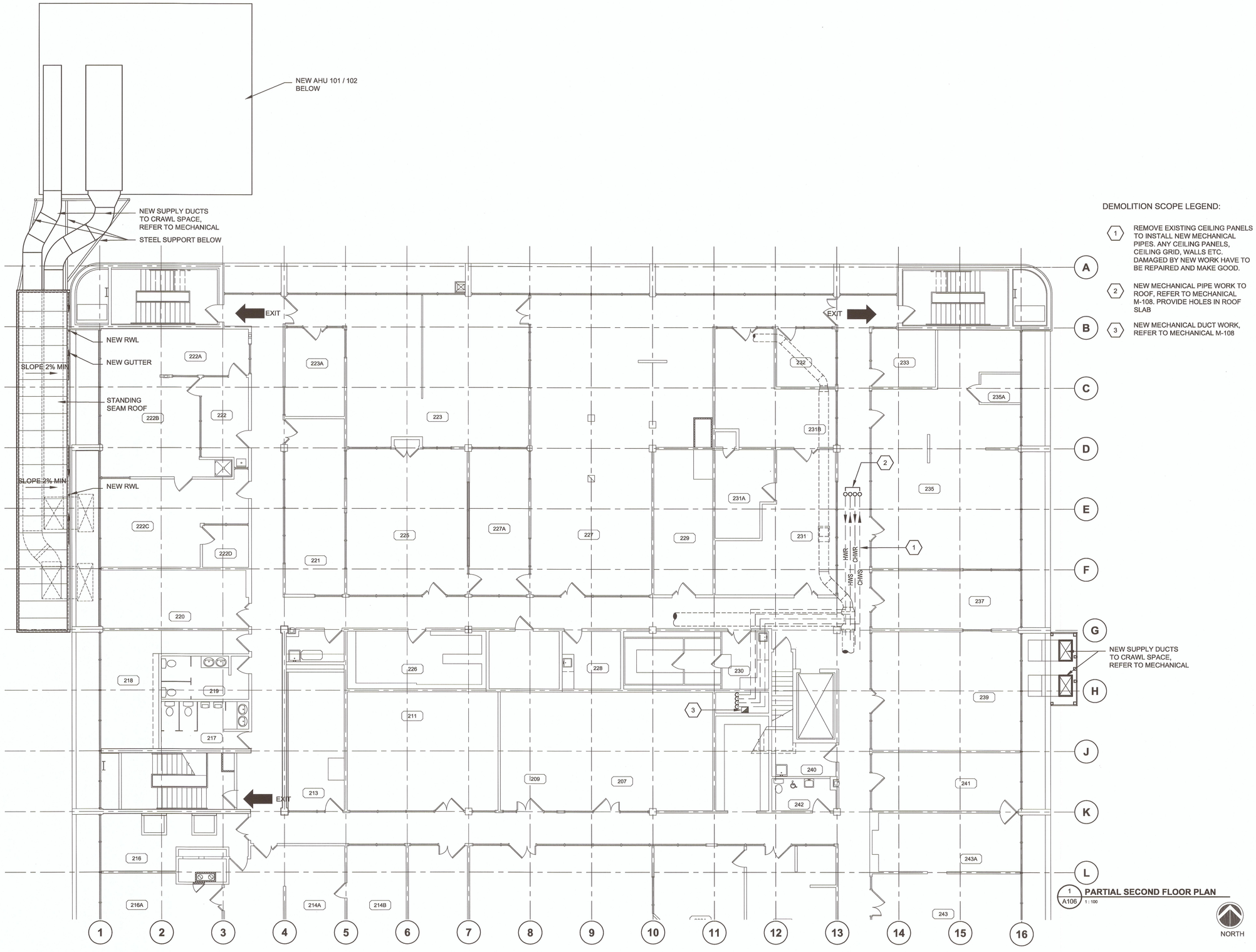

1 A106 **PARTIAL SECOND FLOOR PLAN**
1 : 100

DEMOLITION SCOPE LEGEND:

1. REMOVE EXISTING CEILING PANELS TO INSTALL NEW MECHANICAL PIPES. ANY CEILING PANELS, CEILING GRID, WALLS ETC. DAMAGED BY NEW WORK HAVE TO BE REPAIRED AND MAKE GOOD.
2. NEW MECHANICAL PIPE WORK TO ROOF, REFER TO MECHANICAL M-108. PROVIDE HOLES IN ROOF SLAB
3. NEW MECHANICAL DUCT WORK, REFER TO MECHANICAL M-108

REGISTERED ARCHITECT
RUSSELL MICHAEL CHELSOFF
VANCOUVER
BRITISH COLUMBIA

Revision/ Revision	Description/Description	Date/Date
5		
4		
3	ISSUED FOR TENDER	2017-07-13
2	ISSUED FOR 100% CD	2017-05-09
1	PRE-TENDER CD FOR CLIENT REVIEW	2017-04-05
0	50% CD REVIEW	2017-03-03

Client/client

CANADIAN FOOD INSPECTION AGENCY

Project title/Titre du projet

3155 WILLINGDON GREEN BURNABY, BC

CFIA AHU REPLACEMENT

Consultant Signature Only

Designed by/Concept par
RC

Drawn by/Dessine par
LM

PWGSC Project Manager/Administrateur de Projets TPSGC

Regional Manager, Architectural and Engineering Services Gestionnaire régionale, Services d'architectural et de génie, TPSGC

Drawing title/Titre du dessin

PARTIAL SECOND FLOOR PLAN

Project No./No. du projet	Sheet/ Feuille	Revision no./ La Révision no.
39903-150591	**A106**	**3**

PWGSC – A1 – 841X594

0 10 20 30 40 50 60 70 80 90 100mm

DM5XXXXXX

Public Works and Government Services Canada
Travaux publics et Services gouvernementaux Canada
REAL PROPERTY SERVICES
Pacific Region
SERVICES IMMOBILIERS
Région de Pacifique

OUTLINE OF NEW EXHAUST MANIFOLD, REFER TO A213

OUTLINE OF NEW DUCTWORK, REFER TO 2/A206

PENTHOUSE M6

PENTHOUSE M4

PENTHOUSE M3

EMERGENCY POWER M2

PENTHOUSE M1

OUTLINE OF NEW DUCTWORK, REFER TO 2/A206

OUTLINE OF NEW DUCTWORK, REFER TO 2/A206

OUTLINE OF NEW DUCTWORK, REFER TO 2/A207

OUTLINE OF NEW DUCTWORK, REFER TO 2/A208

PROVIDE 100mm HIGH CONCRETE PAD, COORDINATE WITH MECHANICAL

NEW CONCRETE PAD, REFER TO STRUCTURAL 1/S104

NEW AHU-302

NEW CROSS OVER STAIR, REFER TO DETAIL 1/A216

8 A113

3 A111

EXIT

EXISTING ROOF ANCHOR

EXISTING ROOF ANCHOR

EXISTING ROOF ANCHOR

EXISTING GUARDRAIL

6307
3305
4195
419
300
675
1000
4035
1220
3590
235
1955
235

14 15 16

300 TYPICAL
300 TYPICAL

OUTLINE OF NEW CONCRETE CURB

2 A107 MAIN ROOF DEMOLITION PLAN 1 : 100

NORTH

1 A107 NEW MAIN ROOF PLAN 1 : 100

NORTH

LEGEND:

PARTIAL DEMOLITION OF EXISTING ROOFING MATERIAL TO MAKE WAY FOR NEW CONCRETE PAD AND CURB, REFER TO DETAILS 6/8/A113

REGISTERED ARCHITECT
RUSSELL MICHAEL GOLDOFF
VANCOUVER
BRITISH COLUMBIA

Revision/ Revision	Description/Description	Date/Date
5		
4		
3	ISSUED FOR TENDER	2017-07-13
2	ISSUED FOR 100% CD	2017-05-09
1	PRE-TENDER CD FOR CLIENT REVIEW	2017-04-05
0	50% CD REVIEW	2017-03-03

Client/client

CANADIAN FOOD INSPECTION AGENCY

Project title/Titre du projet

3155 WILLINGDON GREEN
BURNABY, BC

CFIA
AHU REPLACEMENT

Consultant Signature Only

Designed by/Concept par
RC

Drawn by/Dessiné par
LM

PWGSC Project Manager/Administrateur de Projets TPSGC

Regional Manager, Architectural and Engineering Services
Gestionnaire régionale, Services d'architectural et de génie, TPSGC

Drawing title/Titre du dessin

MAIN ROOF DEMOLITION AND NEW PLANS

Project No./No. du projet	Sheet/ Feuille	Revision no./ La Révision no.
39903-150591	**A107**	**3**

PWGSC – A1 – 841X594

0 10 20 30 40 50 60 70 80 90 100mm

DM5XXXXXX

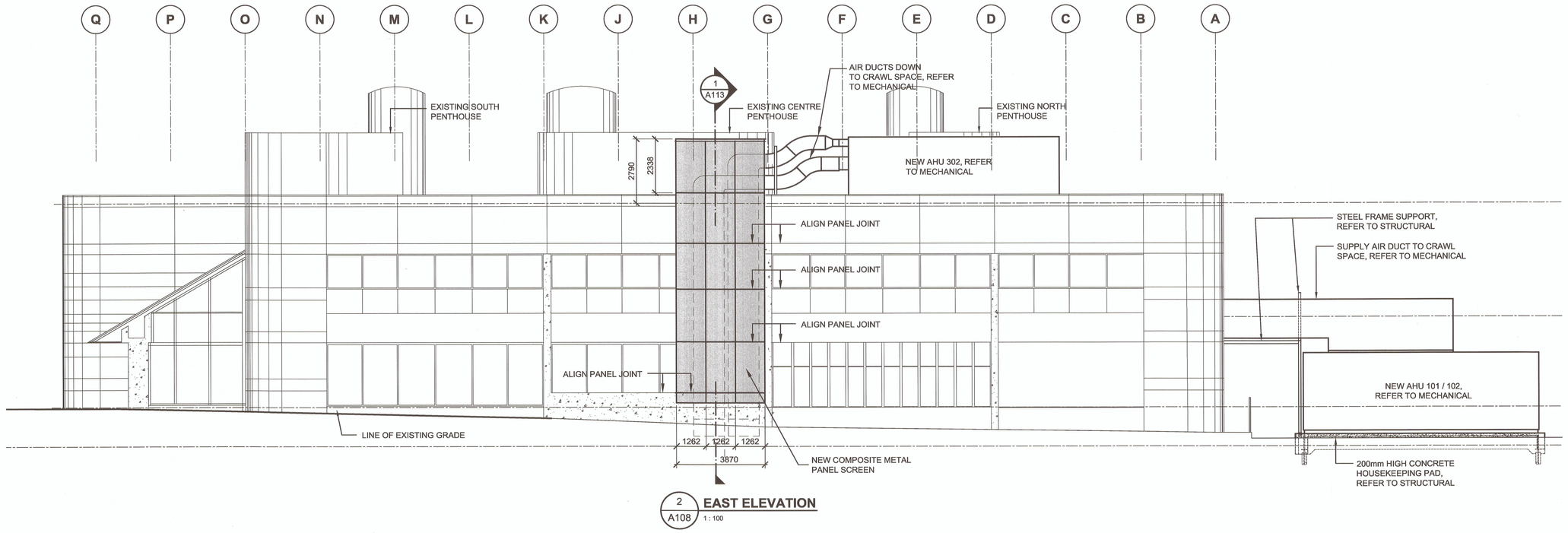

2 A108 **EAST ELEVATION** 1 : 100

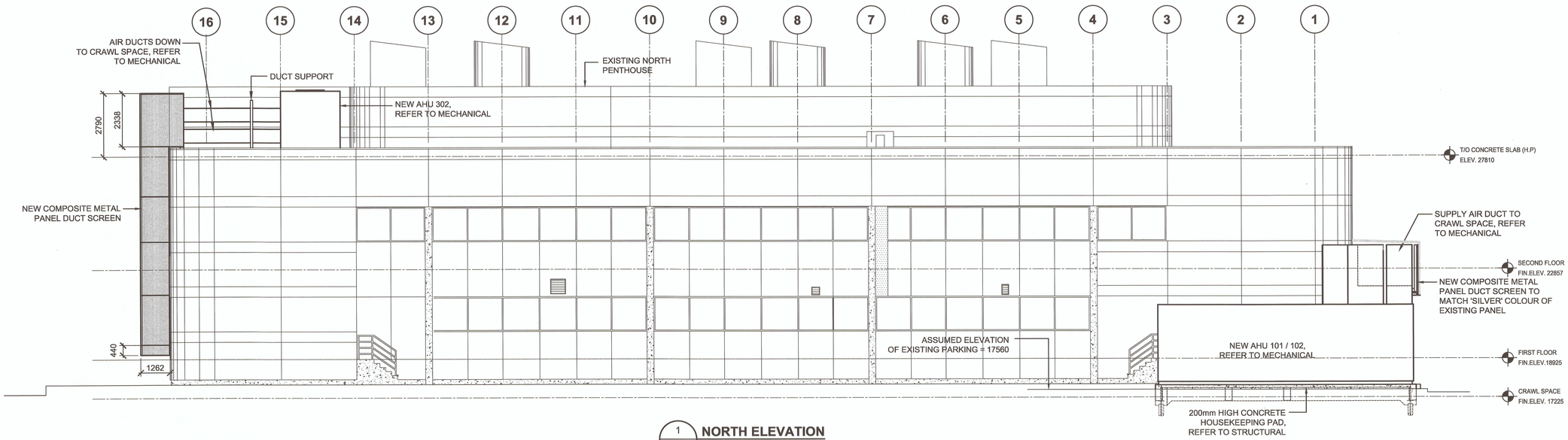

1 A108 **NORTH ELEVATION** 1 : 100

0 10 20 30 40 50 60 70 80 90 100mm

PWGSC – A1 – 841X594

Public Works and Government Services Canada / Travaux publics et Services gouvernementaux Canada

REAL PROPERTY SERVICES
Pacific Region
SERVICES IMMOBILIERS
Région de Pacifique

REGISTERED ARCHITECT * RUSSELL MICHAEL CHUNHOFF * VANCOUVER BRITISH COLUMBIA

Revision/ Revision	Description/Description	Date/Date
5		
4		
3	ISSUED FOR TENDER	2017-07-13
2	ISSUED FOR 100% CD	2017-05-09
1	PRE-TENDER CD FOR CLIENT REVIEW	2017-04-05
0	50% CD REVIEW	2017-03-03

Client/client

CANADIAN FOOD INSPECTION AGENCY

Project title/Titre du projet

3155 WILLINGDON GREEN BURNABY, BC

CFIA AHU REPLACEMENT

Consultant Signature Only

Designed by/Concept par
RC

Drawn by/Dessine par
LM

PWGSC Project Manager/Administrateur de Projets TPSGC

Regional Manager, Architectural and Engineering Services Gestionnaire régionale, Services d'architectural et de génie, TPSGC

Drawing title/Titre du dessin

NORTH AND EAST ELEVATIONS

Project No./No. du projet	Sheet/Feuille	Revision no./ La Révision no.
39903-150591	A108	3

DMSXXXXXX

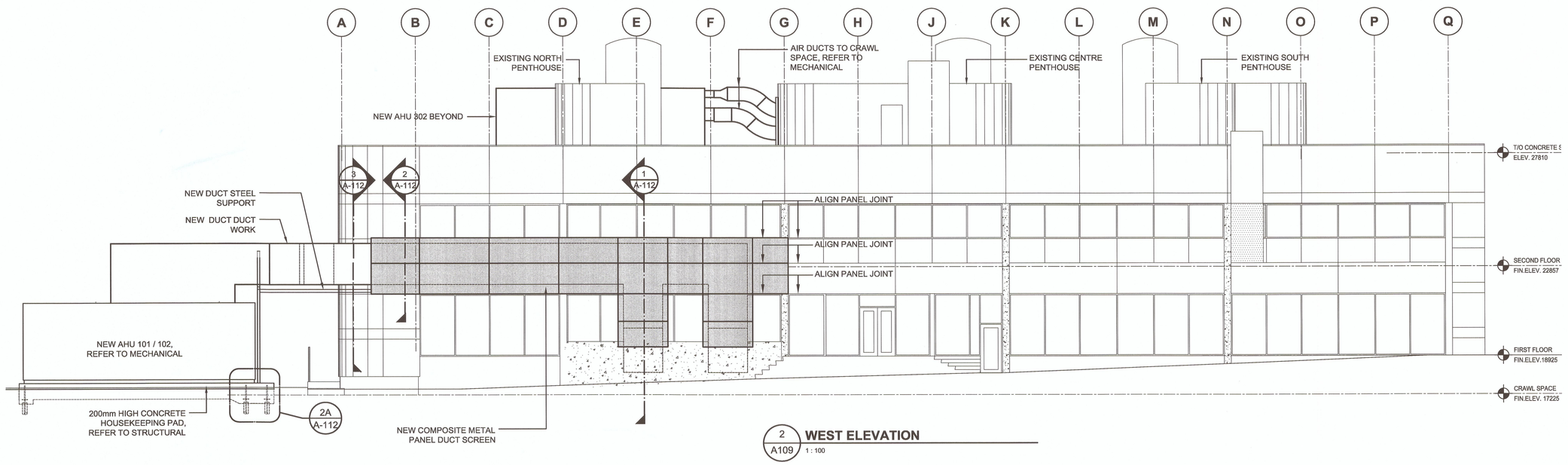

2 A109 **WEST ELEVATION**
1 : 100

LEGEND

NEW COMPOSITE METAL PANEL DUCT SCREEN

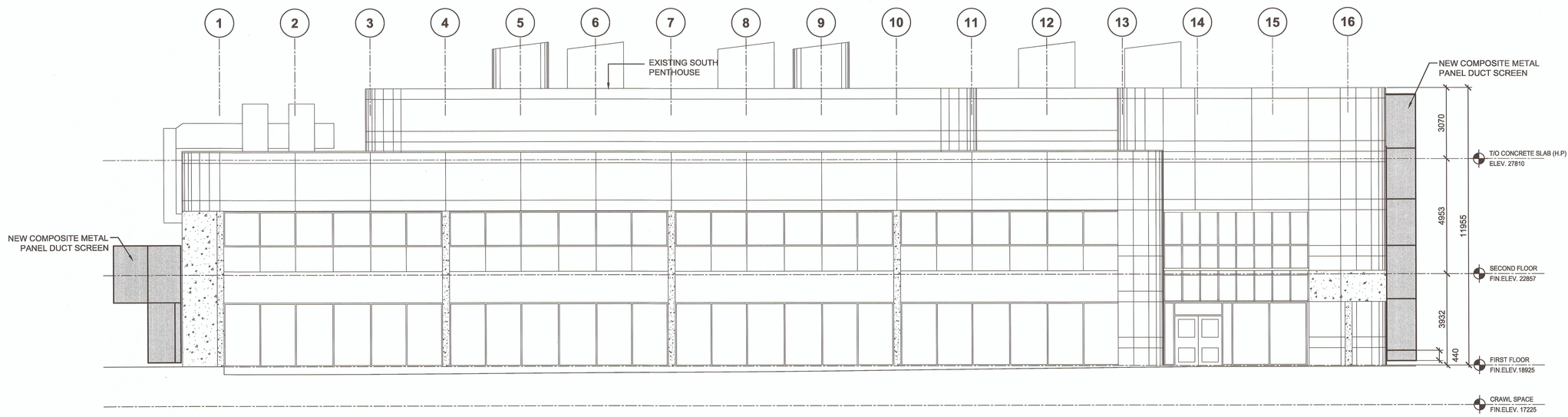

1 A109 **SOUTH ELEVATION**
1 : 100

Public Works and Government Services Canada / Travaux publics et Services gouvernementaux Canada

REAL PROPERTY SERVICES
Pacific Region
SERVICES IMMOBILIERS
Région de Pacifique

RUSSELL MICHAEL CHEMOFF * REGISTERED ARCHITECT * VANCOUVER BRITISH COLUMBIA

Revision/ Revision	Description/Description	Date/Date
5		
4		
3	ISSUED FOR TENDER	2017-07-13
2	ISSUED FOR 100% CD	2017-05-09
1	PRE-TENDER CD FOR CLIENT REVIEW	2017-04-05
0	50% CD REVIEW	2017-03-03

Client/client

CANADIAN FOOD INSPECTION AGENCY

Project title/Titre du projet

3155 WILLINGDON GREEN
BURNABY, BC

CFIA
AHU REPLACEMENT

Consultant Signature Only

Designed by/Concept par
RC

Drawn by/Dessine par
LM

PWGSC Project Manager/Administrateur de Projets TPSGC

Regional Manager, Architectural and Engineering Services / Gestionnaire régionale, Services d'architectural et de génie, TPSGC

Drawing title/Titre du dessin

SOUTH AND WEST ELEVATIONS

Project No./No. du projet	Sheet/ Feuille	Revision no./ La Révision no.
39903-150591	A109	3

PWGSC – A1 – 841X594

0 10 20 30 40 50 60 70 80 90 100mm

DM5XXXXXX

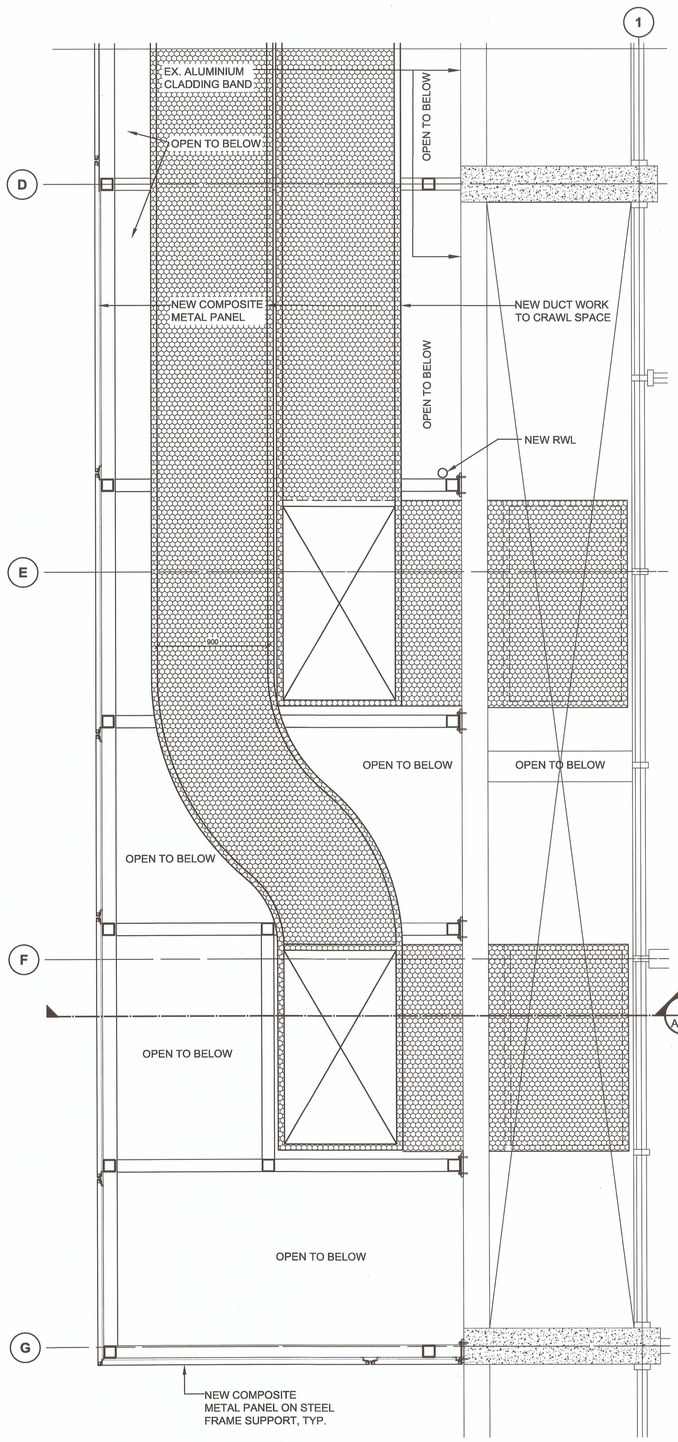

3 A110 **SECOND FLOOR LEVEL - DUCT/SCREEN/SUPPORT DETAIL**

1 : 30

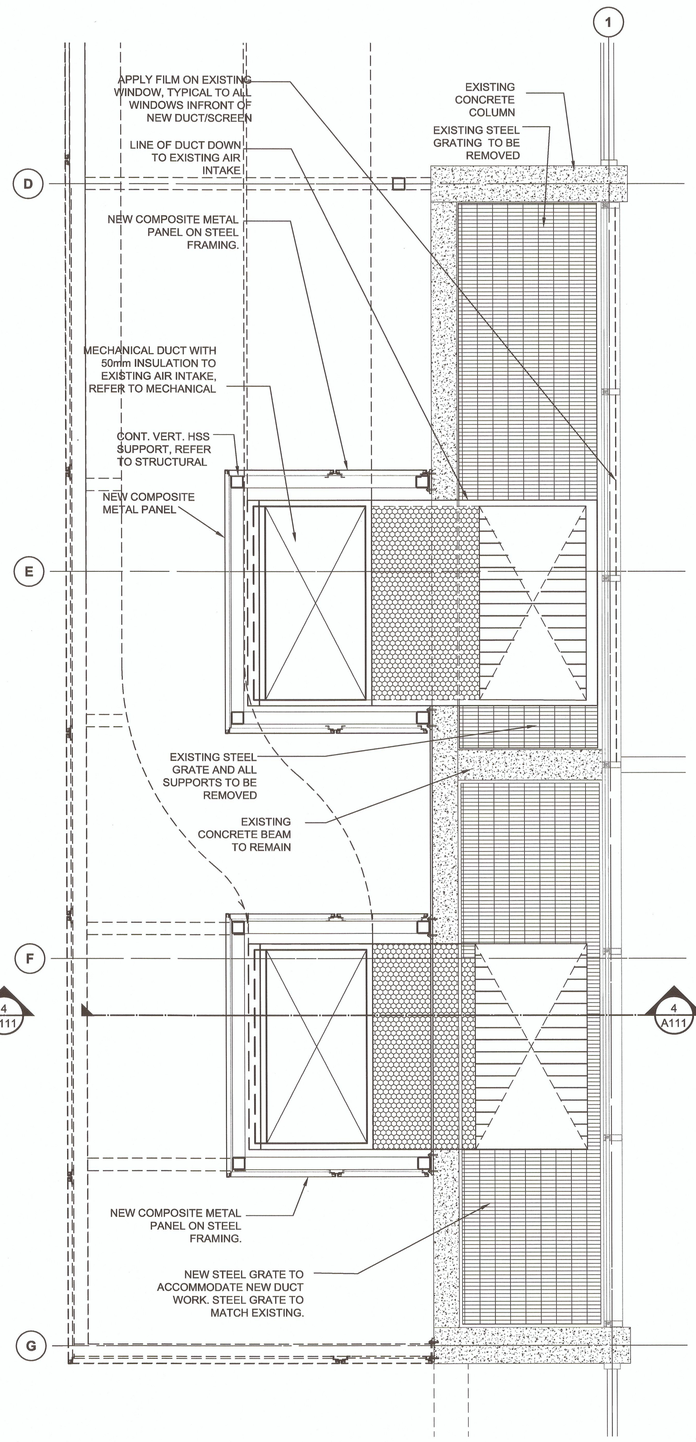

2 A110 **MAIN FLOOR LEVEL - DUCT/SCREEN/SUPPORT DETAIL**

1 : 30

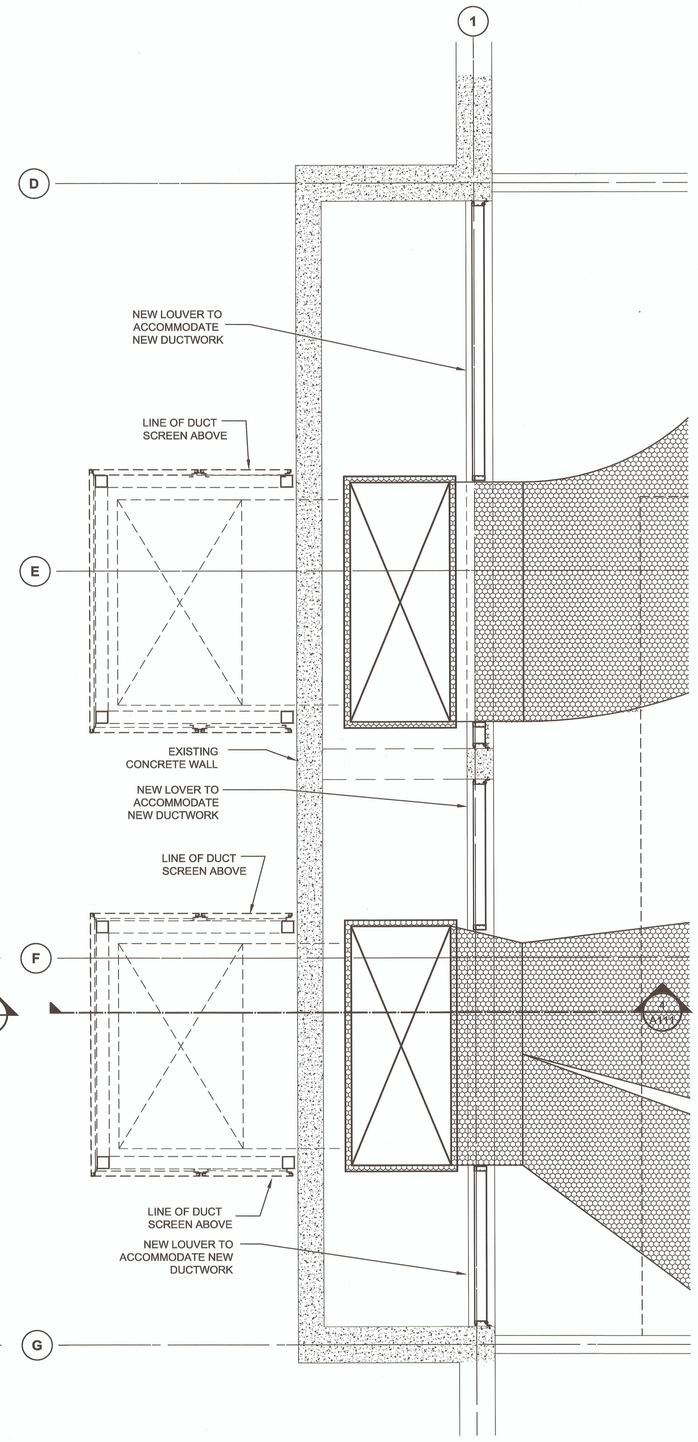

1 A110 **DUCT THROUGH CRAWL SPACE**

1 : 30

0 10 20 30 40 50 60 70 80 90 100mm

PWGSC – A1 – 841X594

Public Works and Government Services Canada / Travaux publics et Services gouvernementaux Canada

REAL PROPERTY SERVICES
Pacific Region
SERVICES IMMOBILIERS
Région de Pacifique

REGISTERED ARCHITECT * RUSSELL MICHAEL LISSHOFF * VANCOUVER BRITISH COLUMBIA

5		
4		
3	ISSUED FOR TENDER	2017-07-13
2	ISSUED FOR 100% CD	2017-05-09
1	PRE-TENDER CD FOR CLIENT REVIEW	2017-04-05
0	50% CD REVIEW	2017-03-03
Revision/ Revision	Description/Description	Date/Date

Client/client

CANADIAN FOOD INSPECTION AGENCY

Project title/Titre du projet

3155 WILLINGDON GREEN BURNABY, BC

CFIA AHU REPLACEMENT

Consultant Signature Only

Designed by/Concept par
RC

Drawn by/Dessine par
LM

PWGSC Project Manager/Administrateur de Projets TPSGC

Regional Manager, Architectural and Engineering Services Gestionnaire régionale, Services d'architectural et de génie, TPSGC

Drawing title/Titre du dessin

PLAN DETAILS - AHU 101/102

Project No./No. du projet	Sheet/Feuille	Revision no./ La Révision no.
39903-150591	**A110**	**3**

DM5XXXXXX

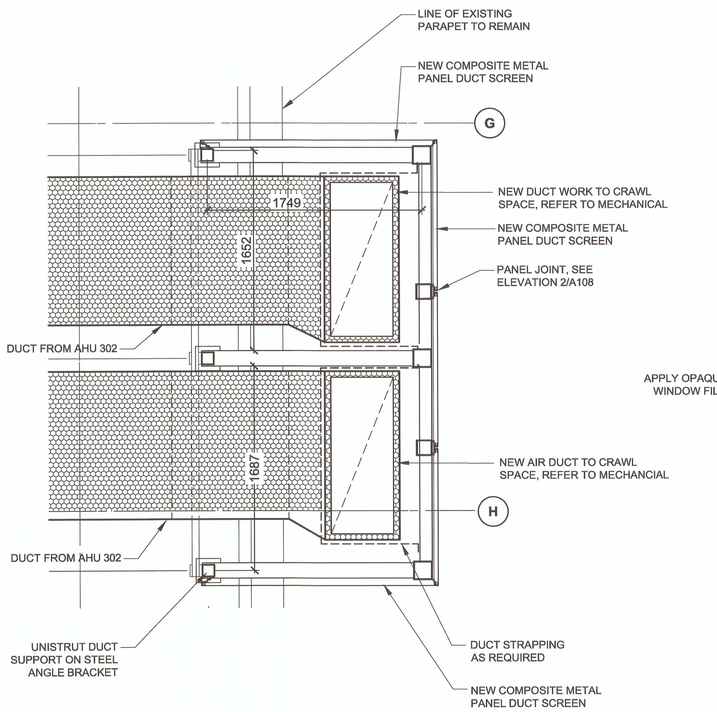

3 / A111 **PLAN DETAIL - DUCTS @ ROOF LEVEL**
1:25

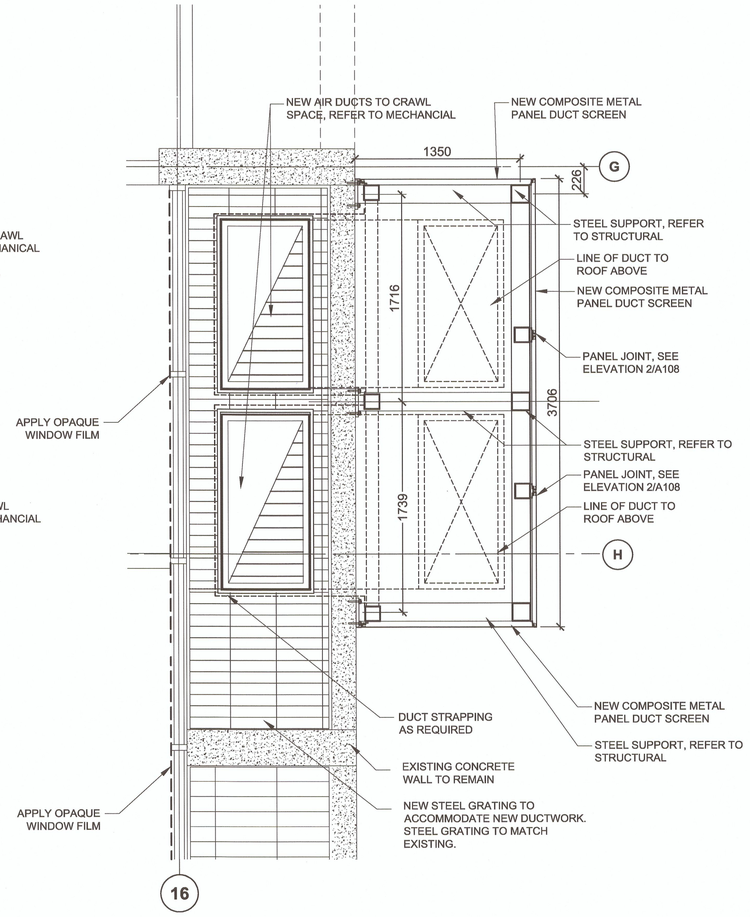

2 / A111 **PLAN DETAIL - DUCTS @ MAIN FLOOR LEVEL**
1:25

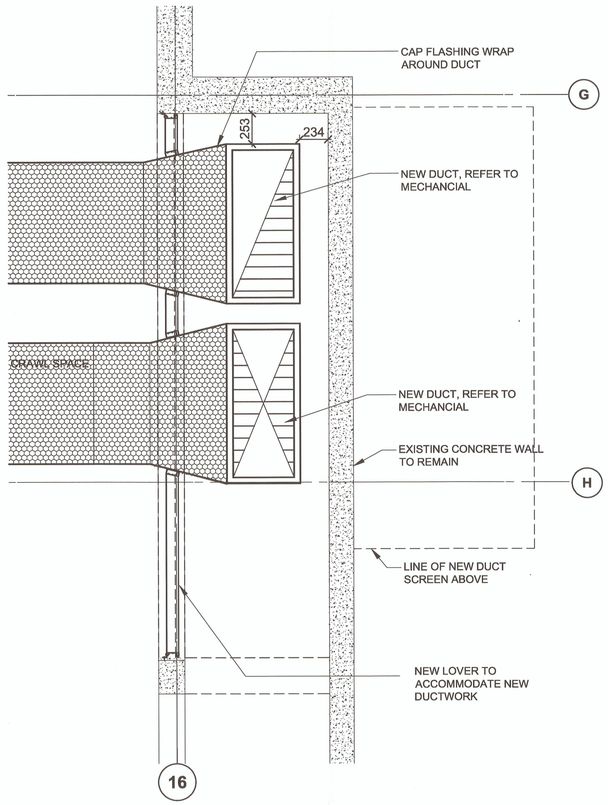

1 / A111 **PLAN DETAIL - DUCTS @ CRAWL SPACE**
1:25

PWGSC – A1 – 841X594

0 10 20 30 40 50 60 70 80 90 100mm

Public Works and Government Services Canada
Travaux publics et Services gouvernementaux Canada
REAL PROPERTY SERVICES
Pacific Region
SERVICES IMMOBILIERS
Région de Pacifique

REGISTERED ARCHITECT
RUSSELL MICHAEL CHERNOFF
VANCOUVER
BRITISH COLUMBIA

Revision/ Revision	Description/Description	Date/Date
5		
4		
3	ISSUED FOR TENDER	2017-07-13
2	ISSUED FOR 100% CD	2017-05-09
1	PRE-TENDER CD FOR CLIENT REVIEW	2017-04-05
0	50% CD REVIEW	2017-03-03

Client/client

CANADIAN FOOD INSPECTION AGENCY

Project title/Titre du projet
3155 WILLINGDON GREEN
BURNABY, BC

CFIA
AHU REPLACEMENT

Consultant Signature Only

Designed by/Concept par
RC

Drawn by/Dessine par
LM

PWGSC Project Manager/Administrateur de Projets TPSGC

Regional Manager, Architectural and Engineering Services
Gestionnaire régionale, Services d'architectural et de génie, TPSGC

Drawing title/Titre du dessin
PLAN DETAILS - AHU 103
DUCTS SCREEN @ CRAWL, MAIN AND ROOF LEVELS

Project No./No. du projet	Sheet/ Feuille	Revision no./ La Révision no.
39903-150591	A111	3

DM5XXXXXX

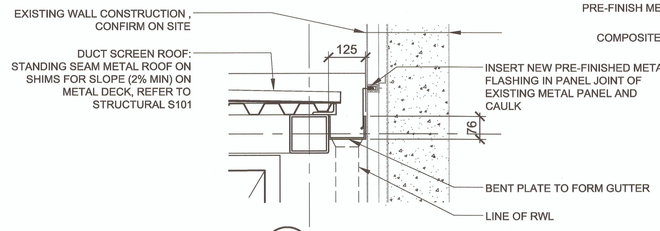

7 A112 **SECTION DETAIL** 1 : 10

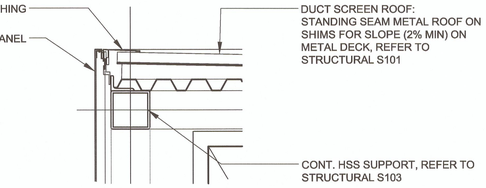

5 A112 **SECTION DETAIL** 1 : 10

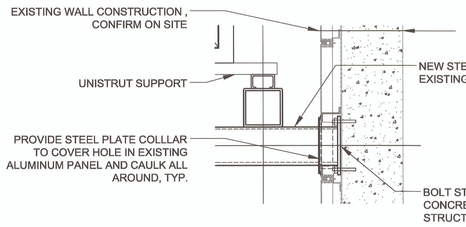

6 A112 **SECTION DETAIL** 1 : 10

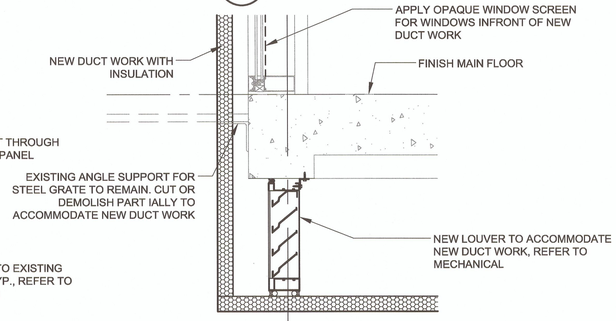

4 A112 **SECTION DETAIL** 1 : 10

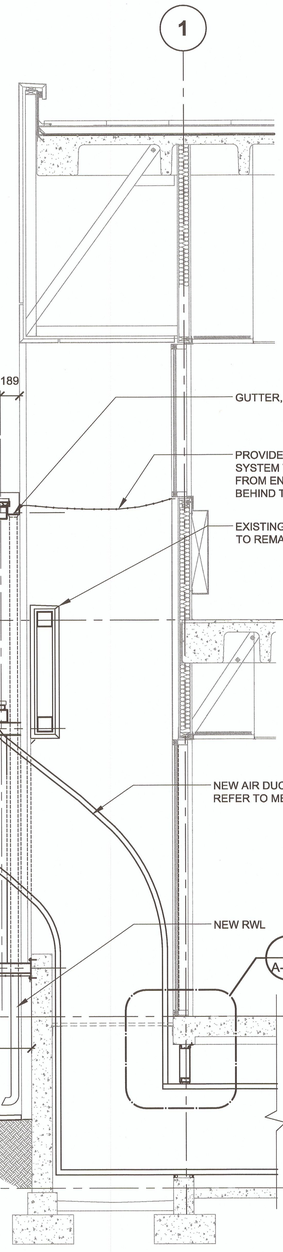

3 A112 **ELEVATION - DUCT THROUGH SCREEN** 1 : 20

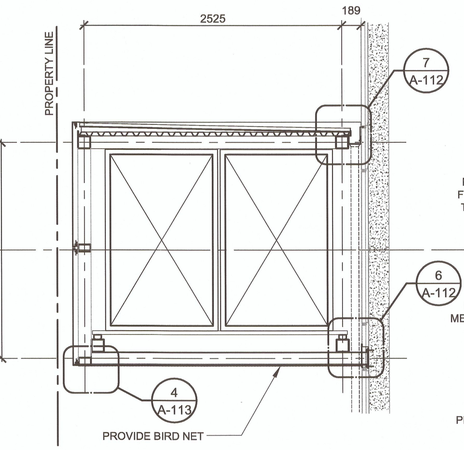

2 A112 **SECTION - DUCT AT EXISTING WALL** 1 : 20

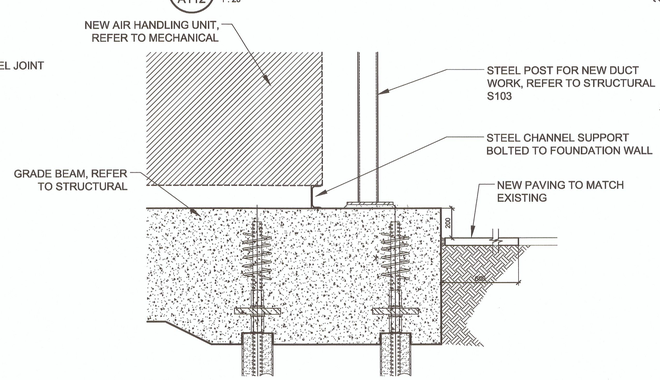

2A A112 **SECTION - CONCRETE PAD FOUNDATION** 1 : 20

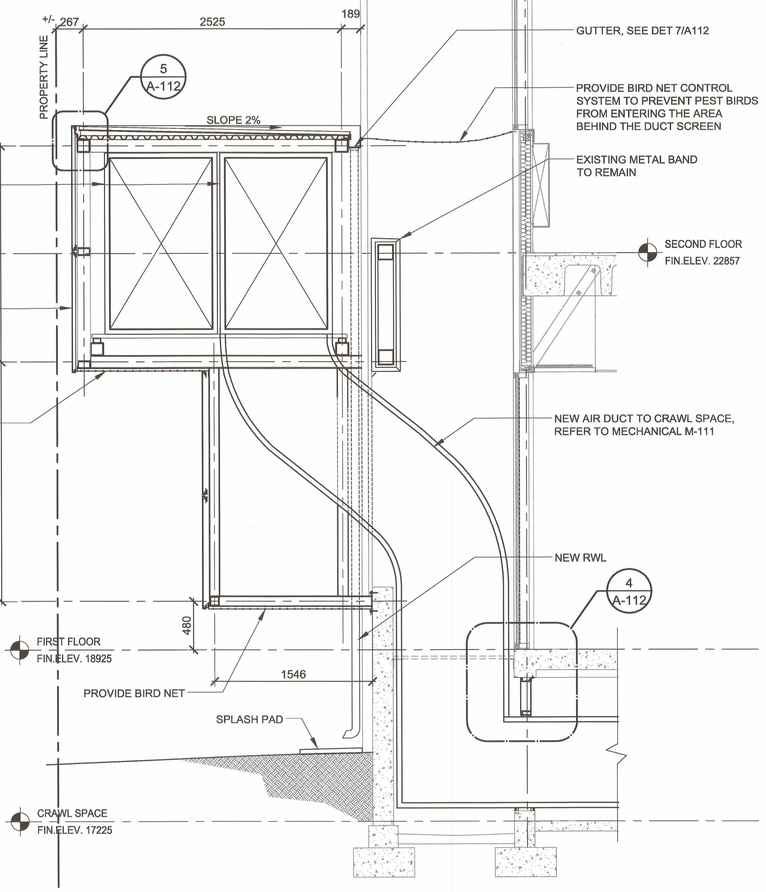

1 A112 **SECTION - DUCT AT EXISTING AIR INTAKE** 1 : 20

0 10 20 30 40 50 60 70 80 90 100mm

PWGSC – A1 – 841X594

Public Works and Government Services Canada / Travaux publics et Services gouvernementaux Canada

REAL PROPERTY SERVICES
Pacific Region
SERVICES IMMOBILIERS
Région de Pacifique

REGISTERED ARCHITECT * RUSSELL MICHAEL KLEINDORFF * VANCOUVER * BRITISH COLUMBIA

5		
4		
3	ISSUED FOR TENDER	2017-07-13
2	ISSUED FOR 100% CD	2017-05-09
1	PRE-TENDER CD FOR CLIENT REVIEW	2017-04-05
0	50% CD REVIEW	2017-03-03
Revision/ Revision	Description/Description	Date/Date

Client/client

CANADIAN FOOD INSPECTION AGENCY

Project title/Titre du projet
3155 WILLINGDON GREEN BURNABY, BC

CFIA AHU REPLACEMENT

Consultant Signature Only

Designed by/Concept par
RC

Drawn by/Dessine par
LM

PWGSC Project Manager/Administrateur de Projets TPSGC

Regional Manager, Architectural and Engineering Services Gestionnaire régionale, Services d'architectural et de génie, TPSGC

Drawing title/Titre du dessin
DETAILS

Project No./No. du projet	Sheet/ Feuille	Revision no./ La Révision no.
39903-150591	**A112**	**3**

DM5XXXXXX

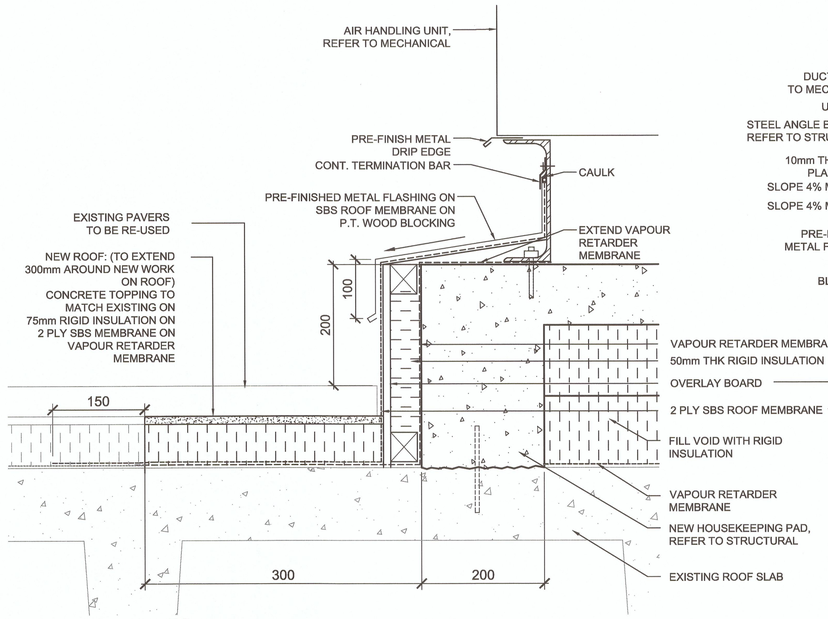

8 / A113 1:5 **DETAIL SECTION - HOUSEHEEPING PAD**

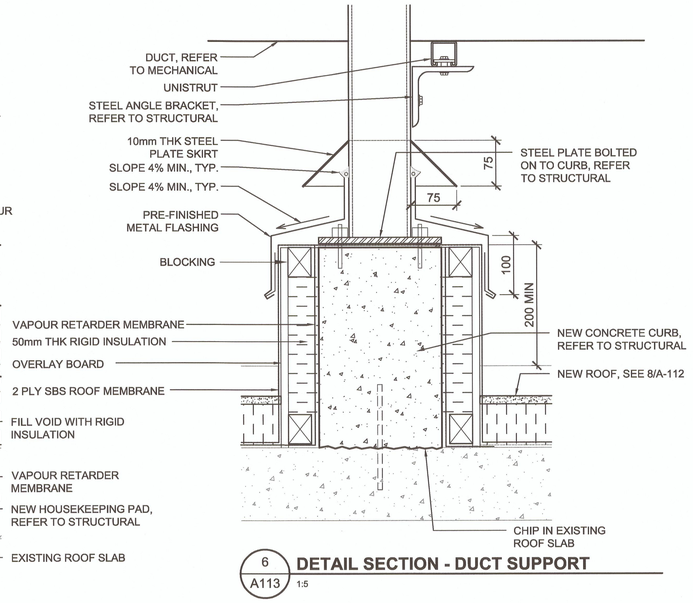

6 / A113 1:5 **DETAIL SECTION - DUCT SUPPORT**

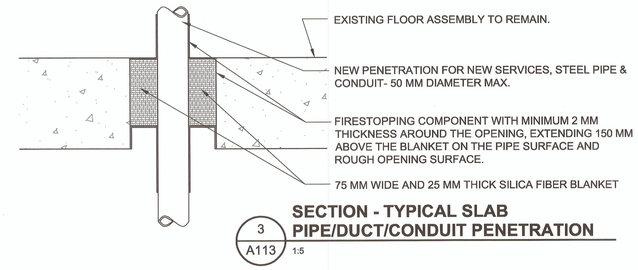

3 / A113 1:5 **SECTION - TYPICAL SLAB PIPE/DUCT/CONDUIT PENETRATION**

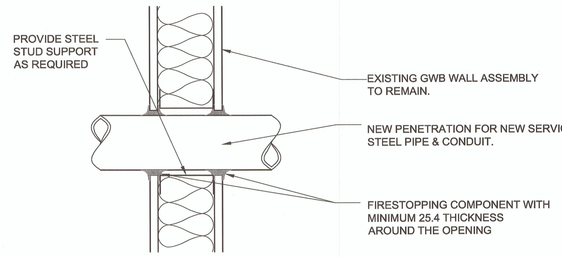

2 / A113 1:5 **SECTION -TYPICAL INTERIOR WALL PIPE/DUCT/CONDUIT PENETRATION**

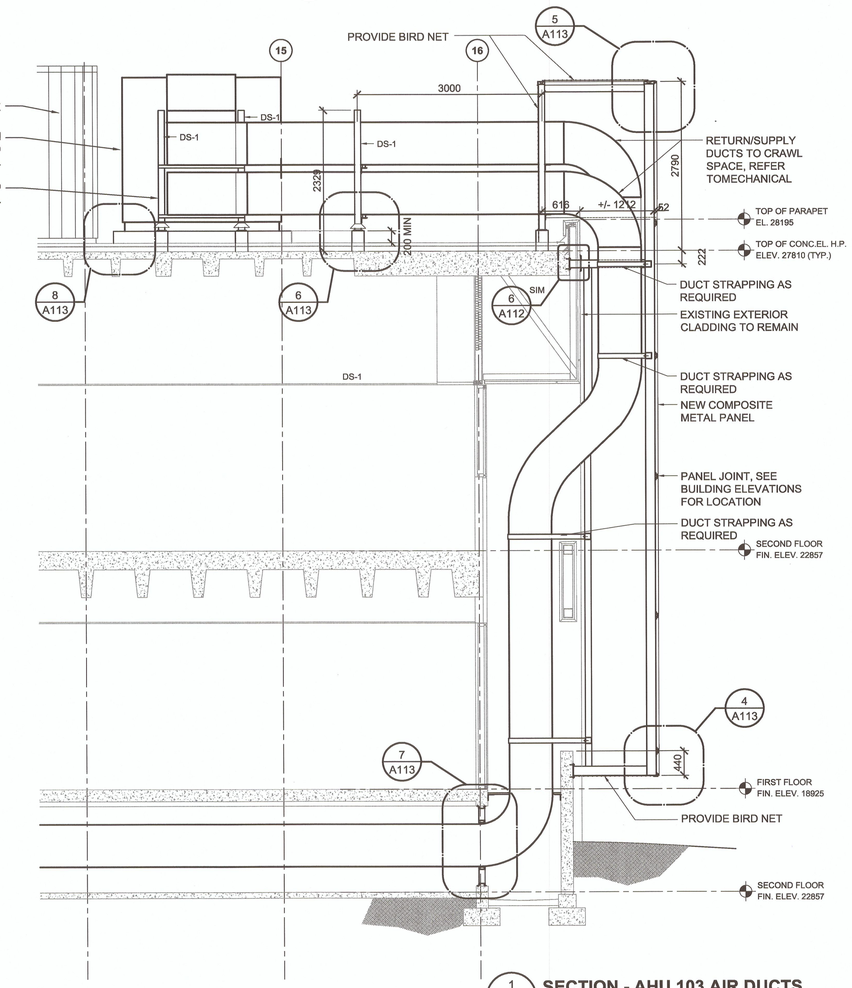

1 / A113 1:50 **SECTION - AHU 103 AIR DUCTS**

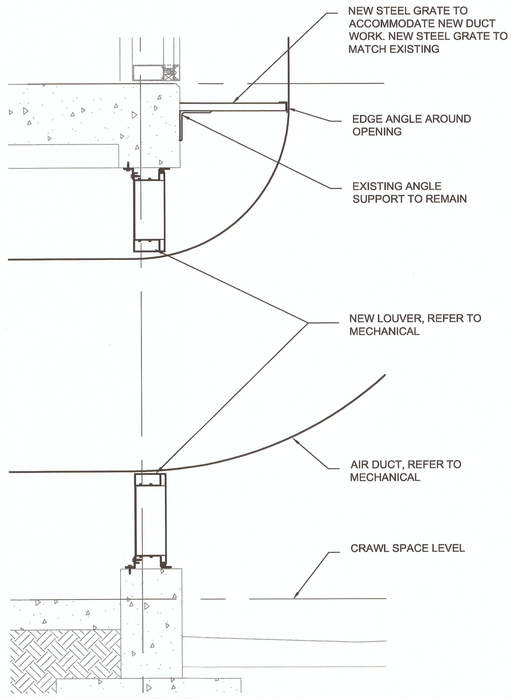

7 / A113 1:10 **SECTION DETAIL - DUCT THROUGH CRAWL SPACE**

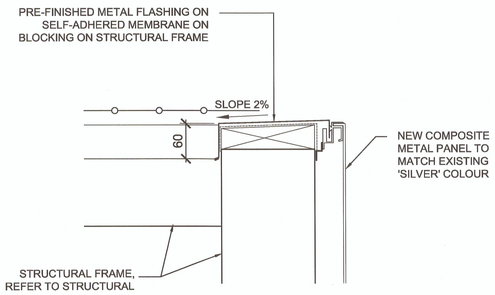

5 / A113 1:50 **SECTION DETAIL - TYPICAL PANEL TOP**

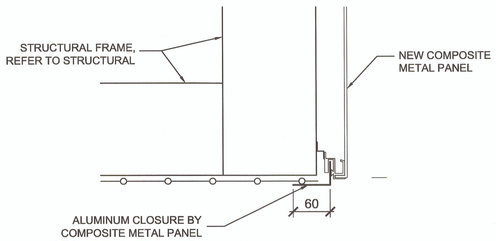

4 / A113 1:50 **SECTION DETAIL - TYPICAL PANEL END**

0 10 20 30 40 50 60 70 80 90 100mm

PWGSC – A1 – 841X594

DM5XXXXXX

Public Works and Government Services Canada / Travaux publics et Services gouvernementaux Canada

REAL PROPERTY SERVICES
Pacific Region
SERVICES IMMOBILIERS
Région de Pacifique

REGISTERED ARCHITECT * RUSSELL MICHAEL GOODHOFF * VANCOUVER BRITISH COLUMBIA

Revision/ Revision	Description/Description	Date/Date
5		
4		
3		
2	ISSUED FOR 100% CD	2017-05-09
1	PRE-TENDER CD FOR CLIENT REVIEW	2017-04-05
0	50% CD	2017-03-03

Client/client
CANADIAN FOOD INSPECTION AGENCY

Project title/Titre du projet
3155 WILLINGDON GREEN BURNABY, BC

CFIA AHU REPLACEMENT

Consultant Signature Only

Designed by/Concept par

Drawn by/Dessine par
LM 11/09/2015

PWGSC Project Manager/Administrateur de Projets TPSGC

Regional Manager, Architectural and Engineering Services Gestionnaire régionale, Services d'architectural et de génie, TPSGC

Drawing title/Titre du dessin
DETAILS

Project No./No. du projet	Sheet/Feuille	Revision no./ La Révision no.
39903-150591	A113	2

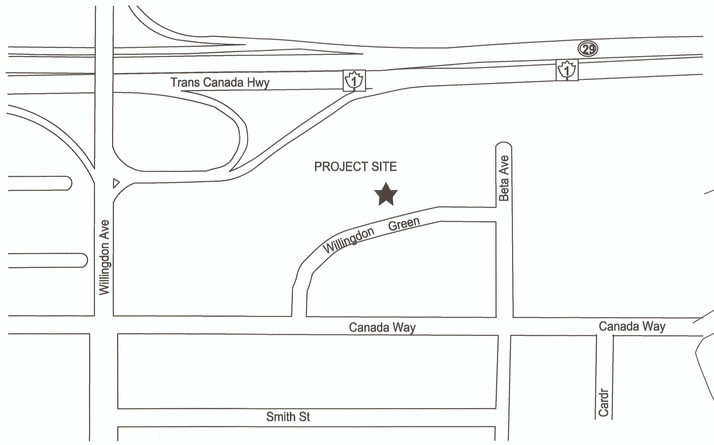

2 A201 **LOCATION PLAN** 1 : 300

NORTH

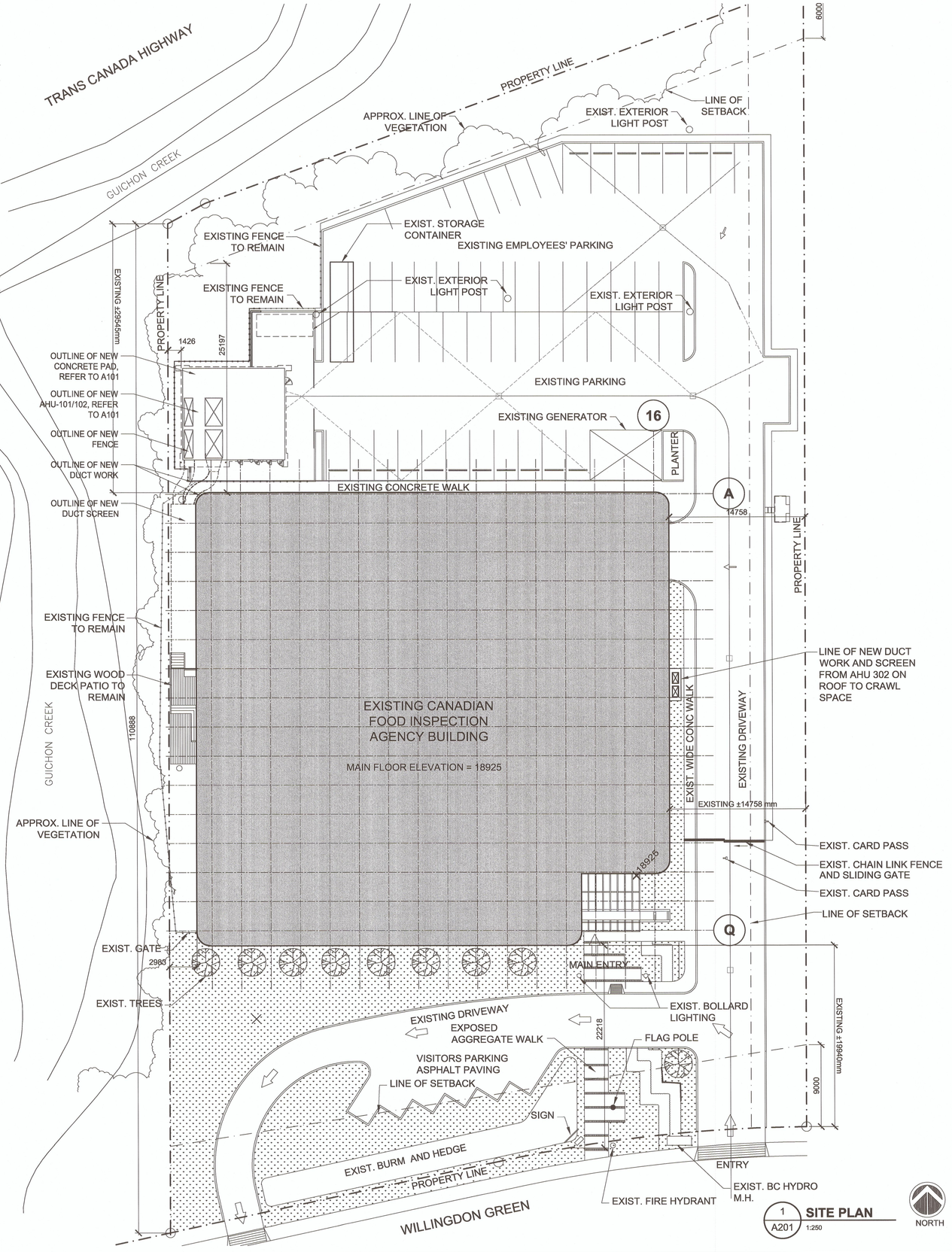

1 A201 **SITE PLAN** 1:250

NORTH

0 10 20 30 40 50 60 70 80 90 100mm

ARCHITECTURAL SYMBOLS:

1 / A-00 **DRAWING TITLE** 1 : 100 — DRAWING IDENTIFICATION

A / 1 — GRID LINES

000.000 — ELEVATION/SECT. MARKERS

1 / A-00 — SECTION MARKERS

1 / A-00 — BUILDING SECTION

A / 1 / A-00 / B / C / D — INTERIOR ELEVATION MARKERS

1 / A-00 — DETAIL REFERENCE

NEW ELEV. — PLAN ELEVATION MARKERS (EXIST ELEV. / NEW ELEV.)

D — WALL TYPE IDENTIFICATION

00 — WINDOW TYPE IDENTIFICATION

000a — DOOR NUMBER IDENTIFICATION

ROOM NAME / 107 — ROOM NAME & NUMBER IDENTIFICATION

M2A / A01 — SCHEDULE REFERENCE

2440 — CEILING HEIGHT IDENTIFICATION

1 — CONSTRUCTION NOTE REFERENCE

Public Works and Government Services Canada / Travaux publics et Services gouvernementaux Canada

REAL PROPERTY SERVICES
Pacific Region
SERVICES IMMOBILIERS
Région de Pacifique

REGISTERED ARCHITECT RUSSELL MICHAEL CHARLOFF VANCOUVER BRITISH COLUMBIA

Revision/ Révision	Description/Description	Date/Date
5		
4		
3	ISSUED FOR TENDER	2017-07-13
2	ISSUED FOR 100% CD	2017-05-09
1	PRE-TENDER CD FOR CLIENT REVIEW	2017-04-06
0	50% CD REVIEW	2017-03-03

Client/client

CANADIAN FOOD INSPECTION AGENCY

Project title/Titre du projet

3155 WILLINGDON GREEN BURNABY, BC

CFIA EXHAUST MANIFOLD REPLACEMENT

Consultant Signature Only

Designed by/Concept par: **RC**

Drawn by/Dessine par: **LM**

PWGSC Project Manager/Administrateur de Projets TPSGC

Regional Manager, Architectural and Engineering Services Gestionnaire régionale, Services d'architectural et de génie, TPSGC

Drawing title/Titre du dessin

SITE PLAN

Project No./No. du projet	Sheet/ Feuille	Revision no./ La Révision no.
39903-150591	A201	3

PWGSC — A1 — 841X594

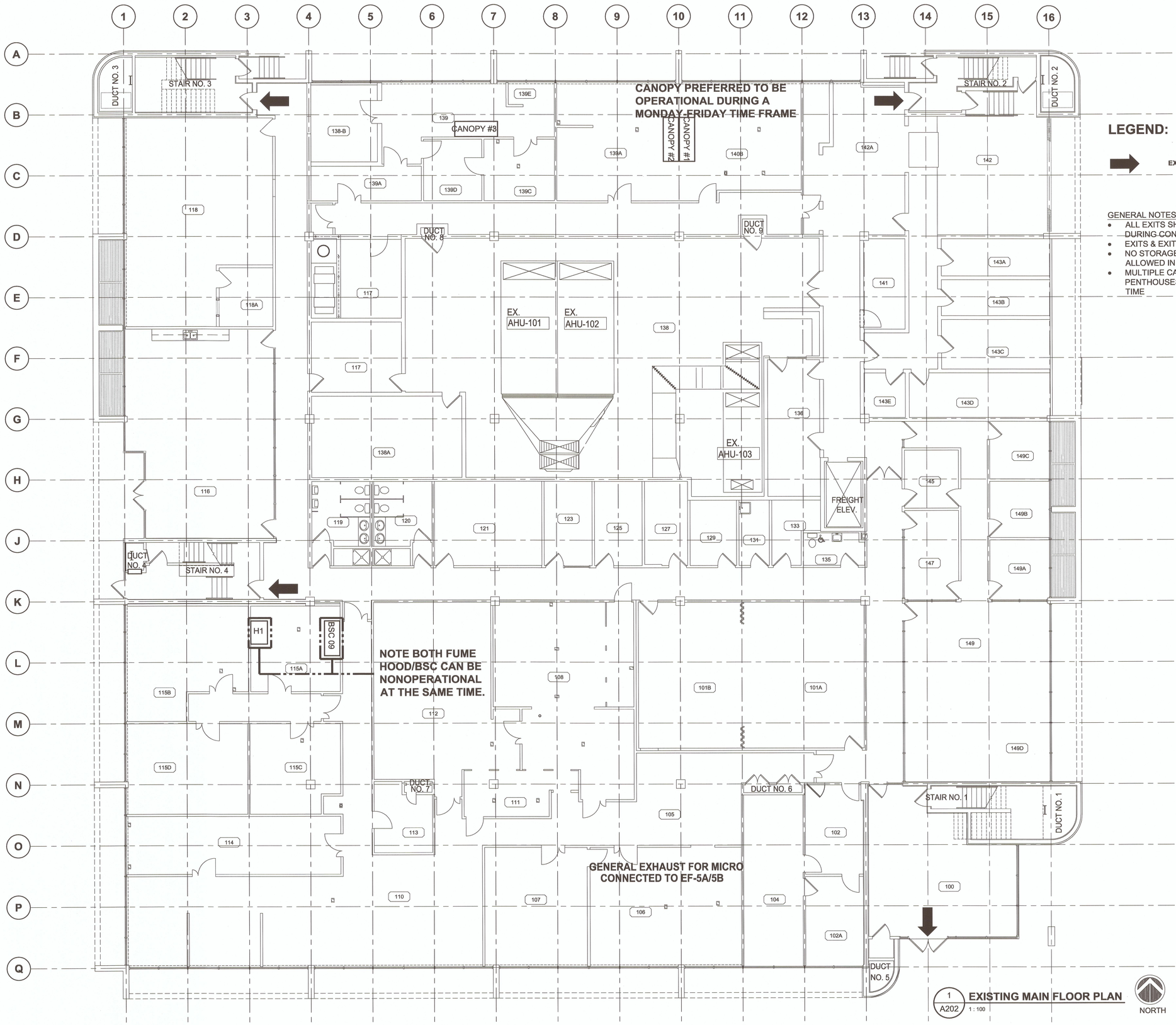

LEGEND:

EXIT

GENERAL NOTES :

- ALL EXITS SHALL REMAIN OPERATIONAL DURING CONSTRUCTION
- EXITS & EXIT PATHS FREE OFF ALL DEBRIS
- NO STORAGE OR STORAGE OF MATERIALS ALLOWED IN ANY EXITS
- MULTIPLE CANOPIES FROM MULTIPLE PENTHOUSES CAN BE DONE AT THE SAME TIME

Public Works and Government Services Canada / Travaux publics et Services gouvernementaux Canada

REAL PROPERTY SERVICES
Pacific Region
SERVICES IMMOBILIERS
Région de Pacifique

REGISTERED ARCHITECT * RUSSELL MICHAEL CHELOFF * VANCOUVER * BRITISH COLUMBIA *

Revision/ Revision	Description/Description	Date/Date
5		
4		
3	ISSUED FOR TENDER	2017-07-13
2	ISSUED FOR 100% CD	2017-05-09
1	PRE-TENDER CD FOR CLIENT REVIEW	2017-04-05
0	50% CD REVIEW	2017-03-03

Client/client

CANADIAN FOOD INSPECTION AGENCY

Project title/Titre du projet

3155 WILLINGDON GREEN
BURNABY, BC

CFIA
EXHAUST MANIFOLD REPLACEMENT

Consultant Signature Only

Designed by/Concept par
RC

Drawn by/Dessine par
LM

PWGSC Project Manager/Administrateur de Projets TPSGC

Regional Manager, Architectural and Engineering Services Gestionnaire régionale, Services d'architectural et de génie, TPSGC

Drawing title/Titre du dessin

EXISTING MAIN FLOOR HOOD EXHAUST LOCATIONS AND PHASING PLAN

Project No./No. du projet	Sheet/Feuille	Revision no./ La Révision no.
39903-150591	**A202**	**3**

PWGSC – A1 – 841X594

0 10 20 30 40 50 60 70 80 90 100mm

DM5XXXXXX

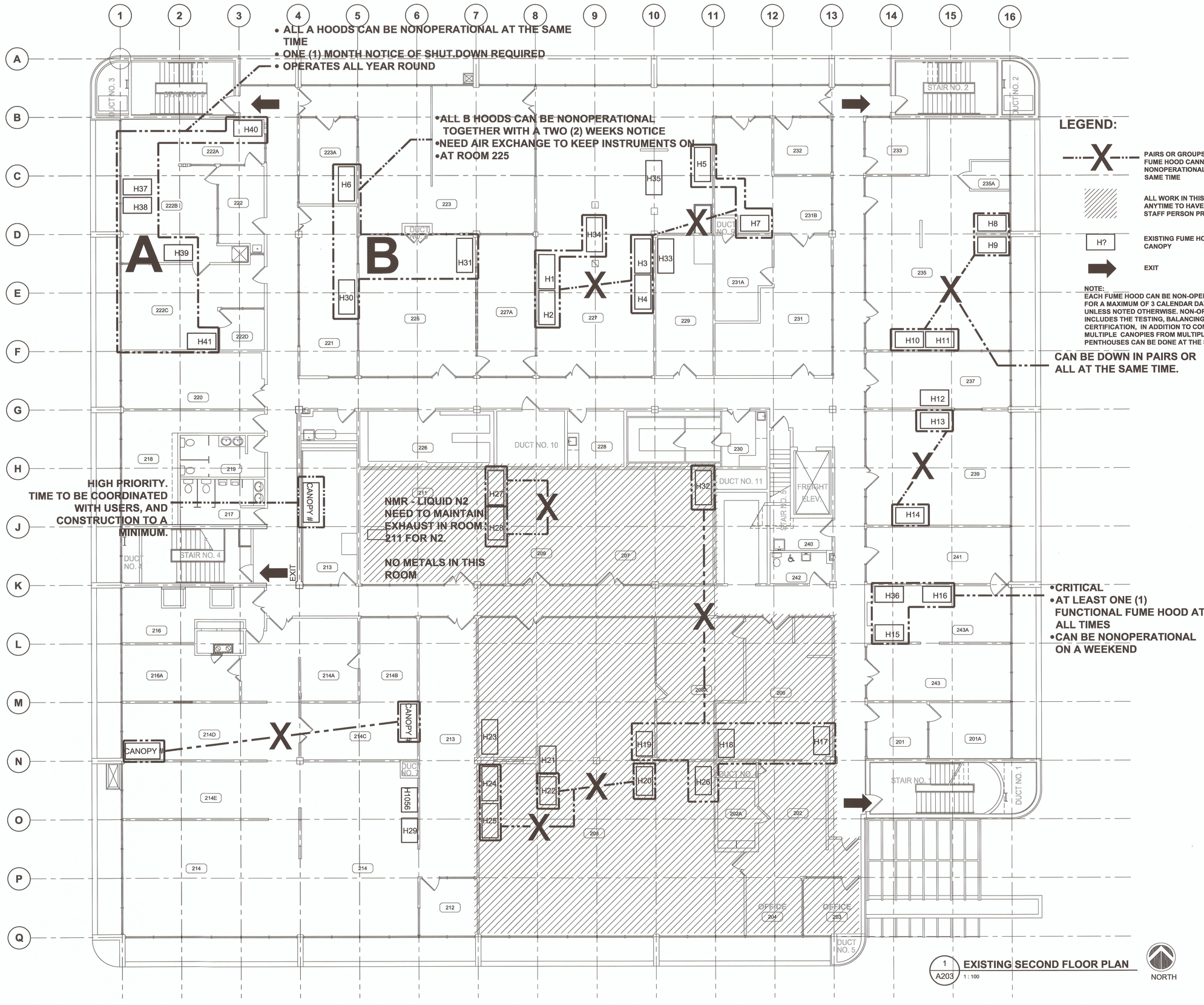

1 A203 EXISTING SECOND FLOOR PLAN
1 : 100

Public Works and Government Services Canada
Travaux publics et Services gouvernementaux Canada

REAL PROPERTY SERVICES
Pacific Region
SERVICES IMMOBILIERS
Région de Pacifique

REGISTERED ARCHITECT * RUSSELL MICHAEL ORTHOFF * VANCOUVER BRITISH COLUMBIA

Revision/ Revision	Description/Description	Date/Date
5		
4		
3	ISSUED FOR TENDER	2017-07-13
2	ISSUED FOR 100% CD	2017-05-09
1	PRE-TENDER CD FOR CLIENT REVIEW	2017-04-05
0	50% CD REVIEW	2017-03-03

Client/client

CANADIAN FOOD INSPECTION AGENCY

Project title/Titre du projet
3155 WILLINGDON GREEN BURNABY, BC

CFIA EXHAUST MANIFOLD REPLACEMENT

Consultant Signature Only

Designed by/Concept par
RC

Drawn by/Dessine par
LM

PWGSC Project Manager/Administrateur de Projets TPSGC

Regional Manager, Architectural and Engineering Services
Gestionnaire régionale, Services d'architectural et de génie, TPSGC

Drawing title/Titre du dessin
EXISTING SECOND FLOOR HOOD EXHAUST LOCATION AND PHASING PLAN

Project No./No. du projet	Sheet/ Feuille	Revision no./ La Révision no.
39903-150591	A203	3

PWGSC – A1 – 841X594

0 10 20 30 40 50 60 70 80 90 100mm

DM5XXXXXX

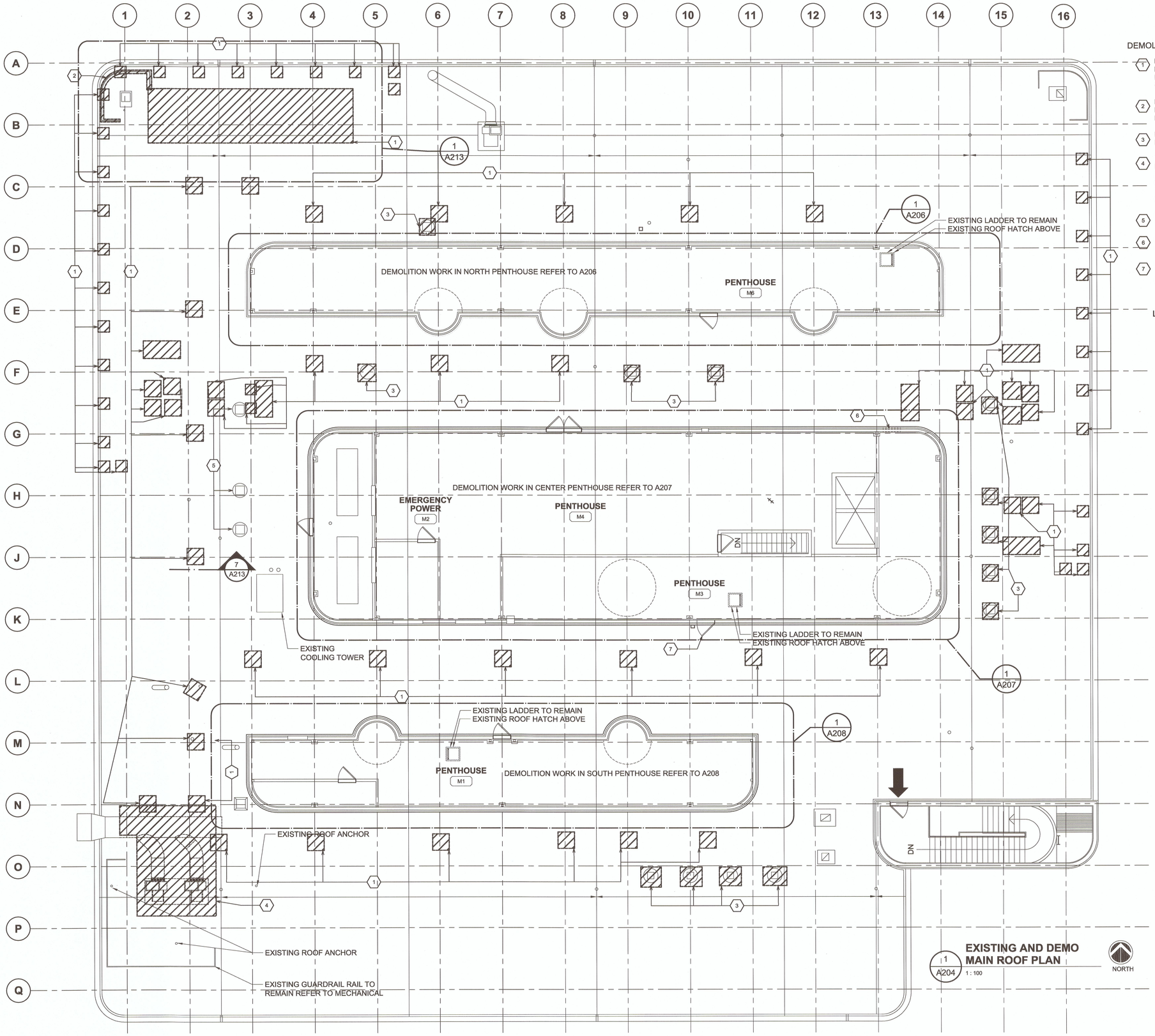

DEMOLITION SCOPE LEGEND:

1. DEMOLISH PART OF EXISTING ROOFING SYSTEM TO MAKE WAY FOR NEW STRUCTURAL CONNECTIONS.
2. REMOVE EXISTING STEEL GUARD RAIL. PATCH, REPAIR & MAKE GOOD ROOF AFFECTED BY DEMOLITION.
3. DEMOLISH EXISTING EXHAUST FAN, REFER TO MECHANICAL M-202
4. EXISTING EXHAUST DUCT TO BE PARTLY DEMOLISHED AND MODIFIED. THE EXISTING DUCT CANNOT BE DEMOLISHED UNTIL THE NEW SYSTEMS ARE INSTALLED, CONNECTED & WORKING.
5. EXHAUST FAN TO REMAIN, REFER TO MECHANICAL
6. REMOVE PART OF EXISTING WALL FOR NEW DOOR #M3
7. EXISTING DOOR TO REMAIN. DOOR TO BE PERMANENTLY CLOSED AND NOT USED FOR EXIT.

LEGEND:

TO BE REMOVED

EXIT

Public Works and Government Services Canada
Travaux publics et Services gouvernementaux Canada

REAL PROPERTY SERVICES
Pacific Region
SERVICES IMMOBILIERS
Région de Pacifique

REGISTERED ARCHITECT * RUSSELL MICHAEL SANDOF * VANCOUVER BRITISH COLUMBIA

Revision/ Revision	Description/Description	Date/Date
5		
4		
3	ISSUED FOR TENDER	2017-07-13
2	ISSUED FOR 100% CD	2017-05-09
1	PRE-TENDER CD FOR CLIENT REVIEW	2017-04-05
0	50% CD REVIEW	2017-03-03

Client/client

CANADIAN FOOD INSPECTION AGENCY

Project title/Titre du projet

3155 WILLINGDON GREEN
BURNABY, BC

CFIA EXHAUST MANIFOLD REPLACEMENT

Consultant Signature Only

Designed by/Concept par
RC

Drawn by/Dessiné par
LM

PWGSC Project Manager/Administrateur de Projets TPSGC

Regional Manager, Architectural and Engineering Services
Gestionnaire régionale, Services d'architectural et de génie, TPSGC

Drawing title/Titre du dessin

EXISTING AND DEMOLITION - MAIN ROOF PLAN

Project No./No. du projet	Sheet/ Feuille	Revision no./ Le Révision no.
39903-150591	A204	3

PWGSC – A1 – 841X594

0 10 20 30 40 50 60 70 80 90 100mm

DM5XXXXXX

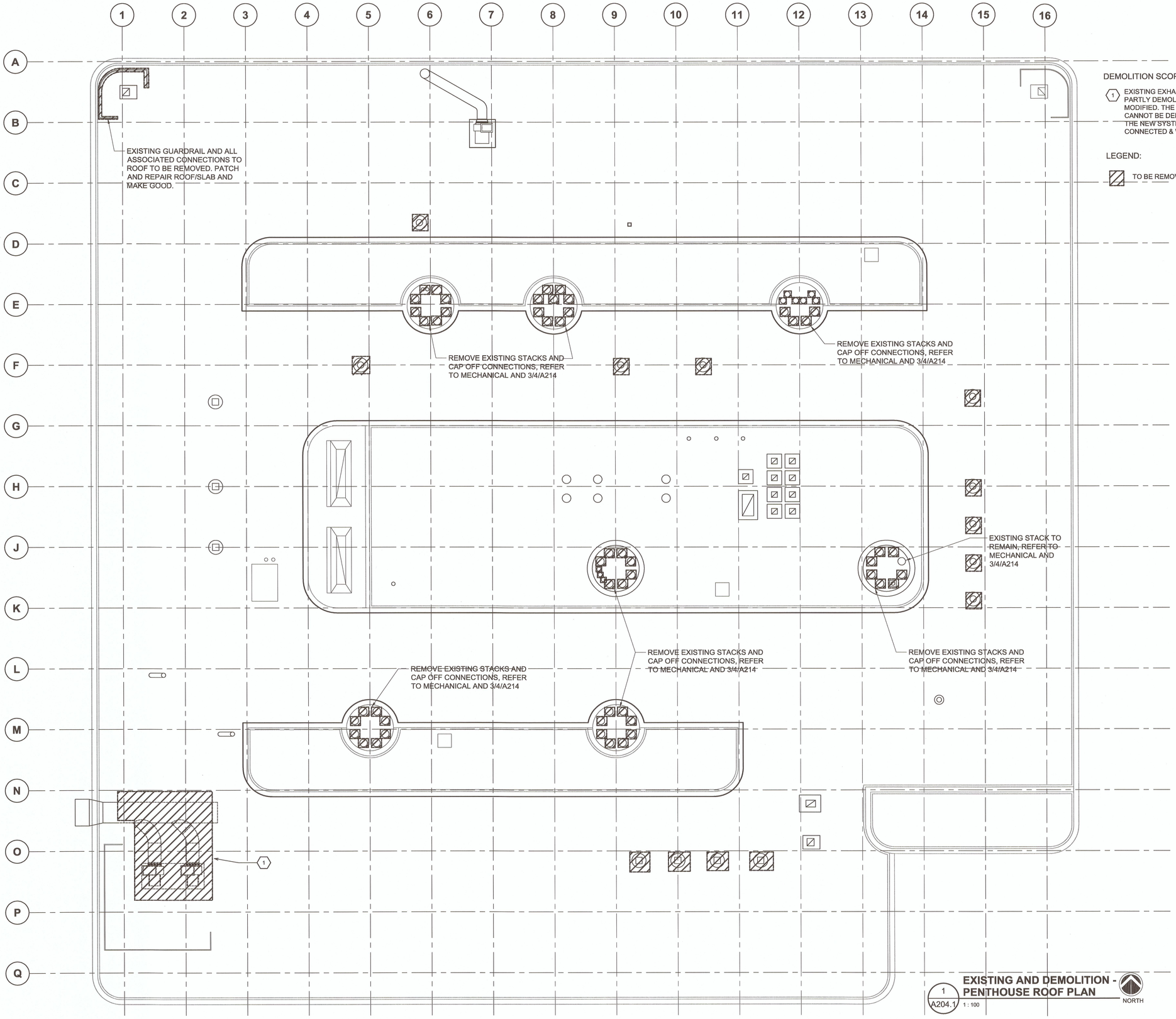

DEMOLITION SCOPE LEGEND:

1 EXISTING EXHAUST DUCT TO BE PARTLY DEMOLISHED AND MODIFIED. THE EXISTING DUCT CANNOT BE DEMOLISHED UNTIL THE NEW SYSTEMS ARE INSTALLED, CONNECTED & WORKING.

LEGEND:

TO BE REMOVED

1 / A204.1 **EXISTING AND DEMOLITION - PENTHOUSE ROOF PLAN** 1 : 100

NORTH

0 10 20 30 40 50 60 70 80 90 100mm

PWGSC – A1 – 841X594

Public Works and Government Services Canada / Travaux publics et Services gouvernementaux Canada

REAL PROPERTY SERVICES
Pacific Region
SERVICES IMMOBILIERS
Région de Pacifique

REGISTERED ARCHITECT
RUSSELL MICHAEL CHERKOFF
VANCOUVER
BRITISH COLUMBIA

Revision/ Revision	Description/Description	Date/Date
5		
4		
3	ISSUED FOR TENDER	2017-07-13
2	ISSUED FOR 100% CD	2017-05-09
1	PRE-TENDER CD FOR CLIENT REVIEW	2017-04-05
0	50% CD REVIEW	2017-03-03

Client/client

CANADIAN FOOD INSPECTION AGENCY

Project title/Titre du projet

3155 WILLINGDON GREEN BURNABY, BC

CFIA EXHAUST MANIFOLD REPLACEMENT

Consultant Signature Only

Designed by/Concept par
RC

Drawn by/Dessine par
LM

PWGSC Project Manager/Administrateur de Projets TPSGC

Regional Manager, Architectural and Engineering Services / Gestionnaire régionale, Services d'architectural et de génie, TPSGC

Drawing title/Titre du dessin

EXISTING AND DEMOLITON - PENTHOUSE ROOF PLAN

Project No./No. du projet	Sheet/ Feuille	Revision no./ La Révision no.
39903-150591	**A204.1**	**3**

DM5XXXXXX

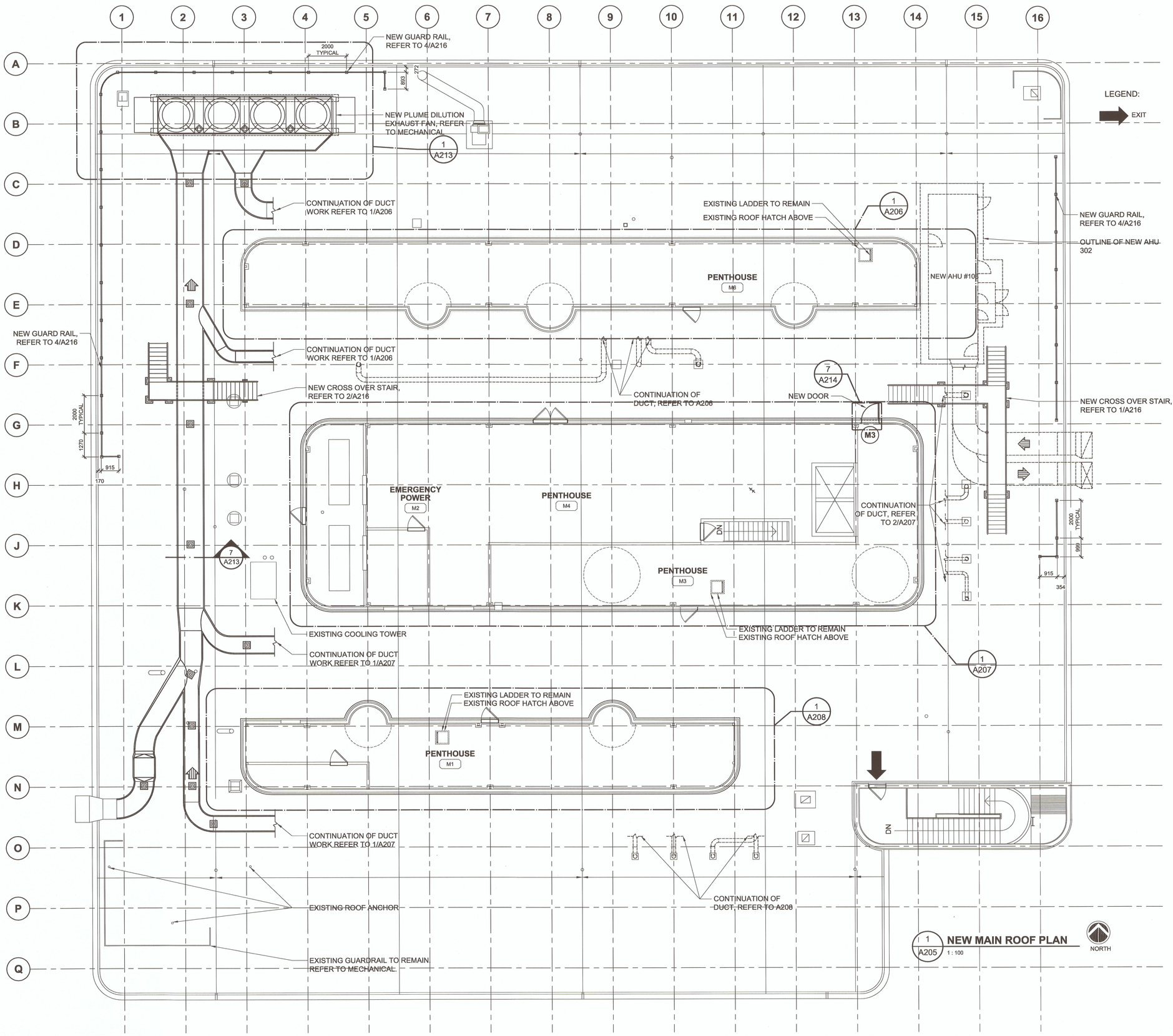

1 A205 **NEW MAIN ROOF PLAN**
1 : 100

0 10 20 30 40 50 60 70 80 90 100mm

PWGSC – A1 – 841X594

Public Works and Government Services Canada
Travaux publics et Services gouvernementaux Canada

REAL PROPERTY SERVICES
Pacific Region
SERVICES IMMOBILIERS
Région de Pacifique

REGISTERED ARCHITECT
RUSSELL MICHAEL GILLHOOF
VANCOUVER
BRITISH COLUMBIA

5		
4		
3	ISSUED FOR TENDER	2017-07-13
2	ISSUED FOR 100% CD	2017-05-09
1	PRE-TENDER CD FOR CLIENT REVIEW	2017-04-05
0	50% CD REVIEW	2017-03-03
Revision/ Révision	Description/Description	Date/Date

Client/client

CANADIAN FOOD INSPECTION AGENCY

Project title/Titre du projet

3155 WILLINGDON GREEN BURNABY, BC

CFIA EXHAUST MANIFOLD REPLACEMENT

Consultant Signature Only

Designed by/Concept par
RC

Drawn by/Dessine par
LM

PWGSC Project Manager/Administrateur de Projets TPSGC

Regional Manager, Architectural and Engineering Services
Gestionnaire régionale, Services d'architectural et de génie, TPSGC

Drawing title/Titre du dessin

NEW MAIN ROOF PLAN

Project No./No. du projet	Sheet/ Feuille	Revision no./ La Révision no.
39903-150591	**A205**	**3**

DM5XXXXXX

DEMOLITION NOTES:

1 CUT THROUGH EXISTING ALUMINUM CLADDING, FELT PAPER, GWB SHEATHING, BATT INSULATION AND POLY VAPOUR BARRIER TO FIT IN NEW STAINLESS SLEEVES. COORDINATE LOCATION WITH MECHANICAL

LEGEND:

- TO BE DEMOLISHED
- TO REMAIN
- NEW
- TO BE REMOVED

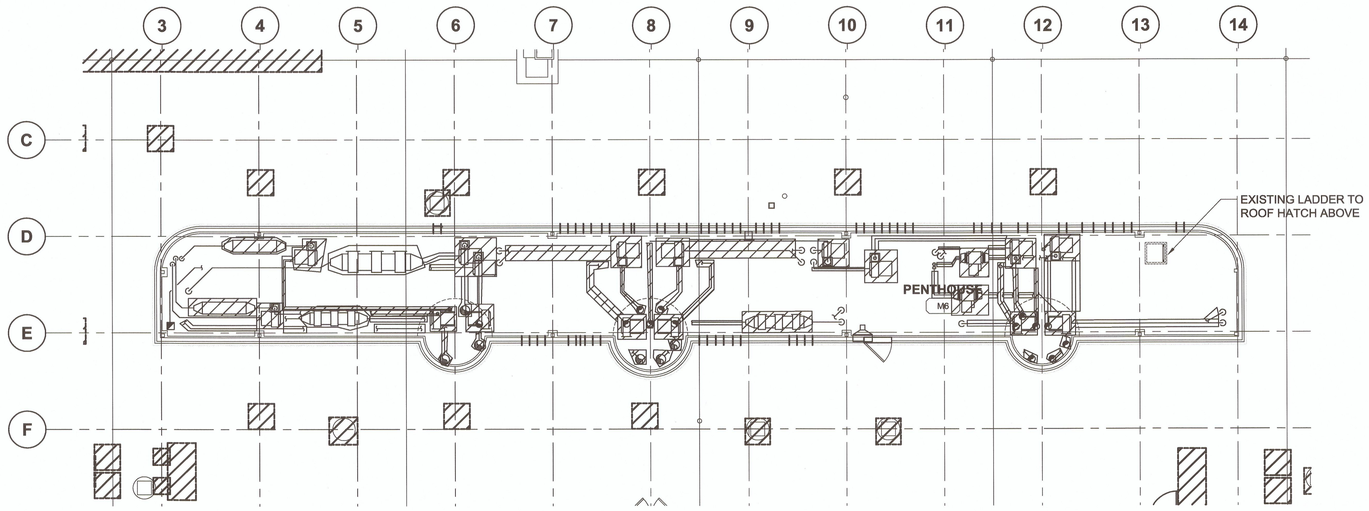

1 A206 **NORTH PENTHOUSE - EXISTING & DEMOLITION PLAN**
1 : 100

NORTH

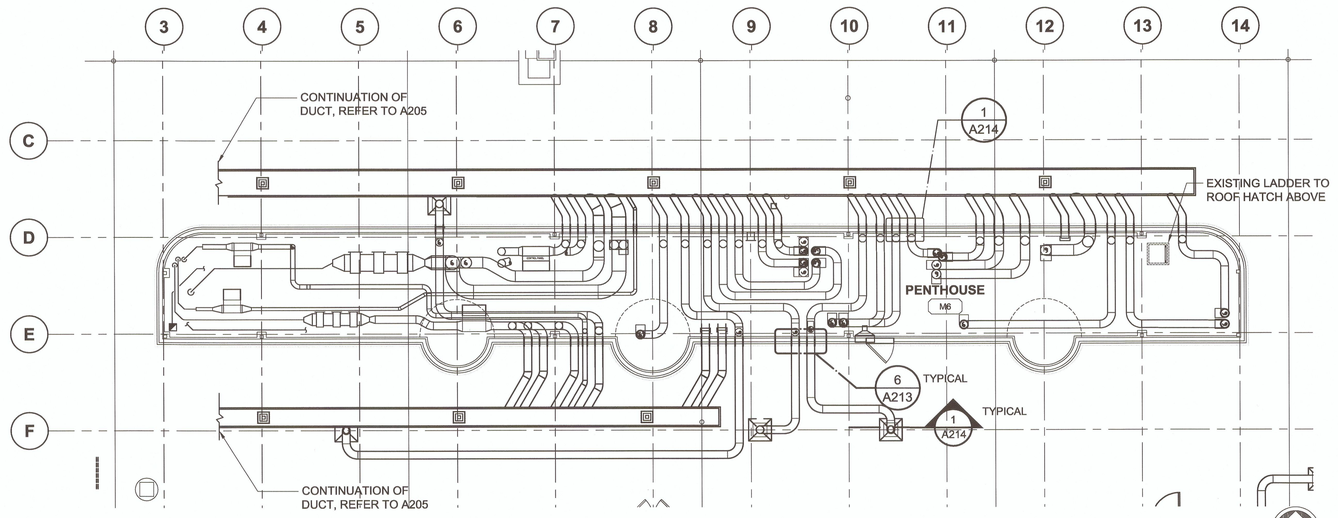

2 A206 **NEW NORTH PENTHOUSE FLOOR PLAN**
1 : 100

NORTH

Public Works and Government Services Canada / Travaux publics et Services gouvernementaux Canada

REAL PROPERTY SERVICES
Pacific Region
SERVICES IMMOBILIERS
Région de Pacifique

CHERNOFF THOMPSON ARCHITECTS

REGISTERED ARCHITECT
RUSSELL MICHAEL CHERNOFF
VANCOUVER
BRITISH COLUMBIA

Revision/ Revision	Description/Description	Date/Date
5		
4		
3	ISSUED FOR TENDER	2017-07-13
2	ISSUED FOR 100% CD	2017-05-09
1	PRE-TENDER CD FOR CLIENT REVIEW	2017-04-05
0	50% CD REVIEW	2017-03-03

Client/client

CANADIAN FOOD INSPECTION AGENCY

Project title/Titre du projet

3155 WILLINGDON GREEN BURNABY, BC

CFIA EXHAUST MANIFOLD REPLACEMENT

Consultant Signature Only

Designed by/Concept par
RC

Drawn by/Dessine par
LM

PWGSC Project Manager/Administrateur de Projets TPSGC

Regional Manager, Architectural and Engineering Services, Gestionnaire régionale, Services d'architecturaux et de génie, TPSGC

Drawing title/Titre du dessin

NORTH PENTHOUSE EXISTING/DEMOLITION AND NEW PLANS

Project No./No. du projet	Sheet/ Feuille	Revision no./ La Révision no.
39903-150591	A206	3

PWGSC – A1 – 841X594

0 10 20 30 40 50 60 70 80 90 100mm

DM5XXXXXX

DEMOLITION AND CONSTRUCTION SCOPE LEGEND:

1. CUT THROUGH EXISTING ALUMINUM CLADDING, FELT PAPER, GWB SHEATHING, BATT INSULATION AND POLY VAPOUR BARRIER TO FIT IN NEW STAINLESS SLEEVES. COORDINATE LOCATION WITH MECHANICAL
2. BORE HOLES IN EXISTING SLAB TO MAKE WAY FOR NEW PIPE WORK, REFER TO ELECTRICAL E.1.05
3. BORE HOLES IN EXISTING SLAB TO MAKE WAY FOR NEW PIPE WORK, REFER TO ELECTRICAL E.1.05
4. NEW ELECTRICL PANEL, REFER TO ELECTRICAL E1.05
5. NEW MCC, REFER TO ELECTRICAL E1.05
6. NEW TRANSFORMER, REFER TO ELECTRICAL E1.05

LEGEND:

- TO BE DEMOLISHED
- TO REMAIN
- NEW
- TO BE REMOVED

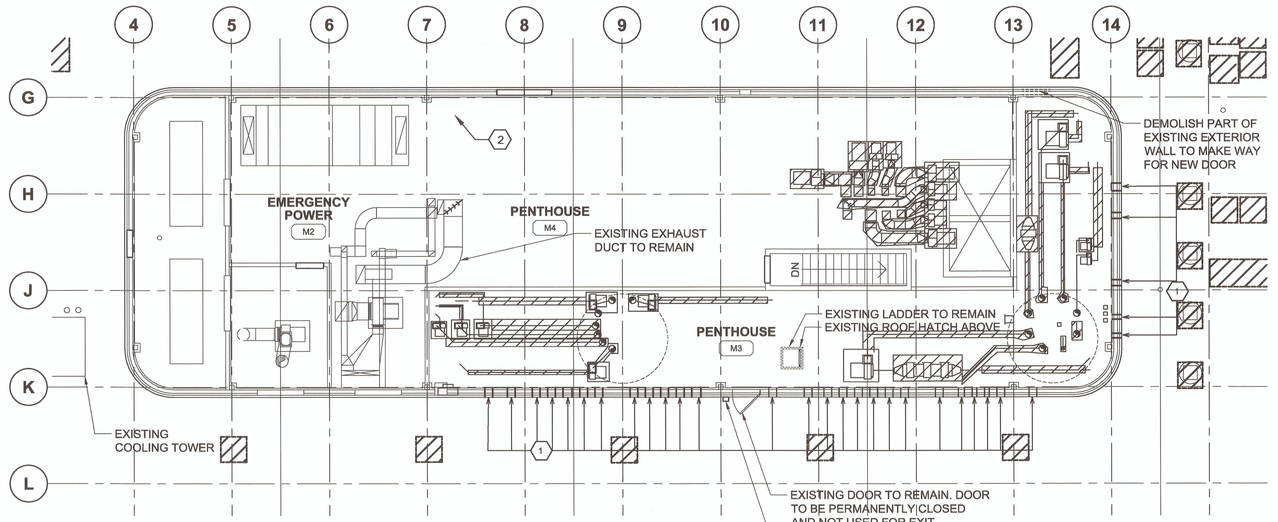

1 / A207 **CENTRE PENTHOUSE - EXISTING & DEMOLITION PLAN** 1 : 100

NORTH

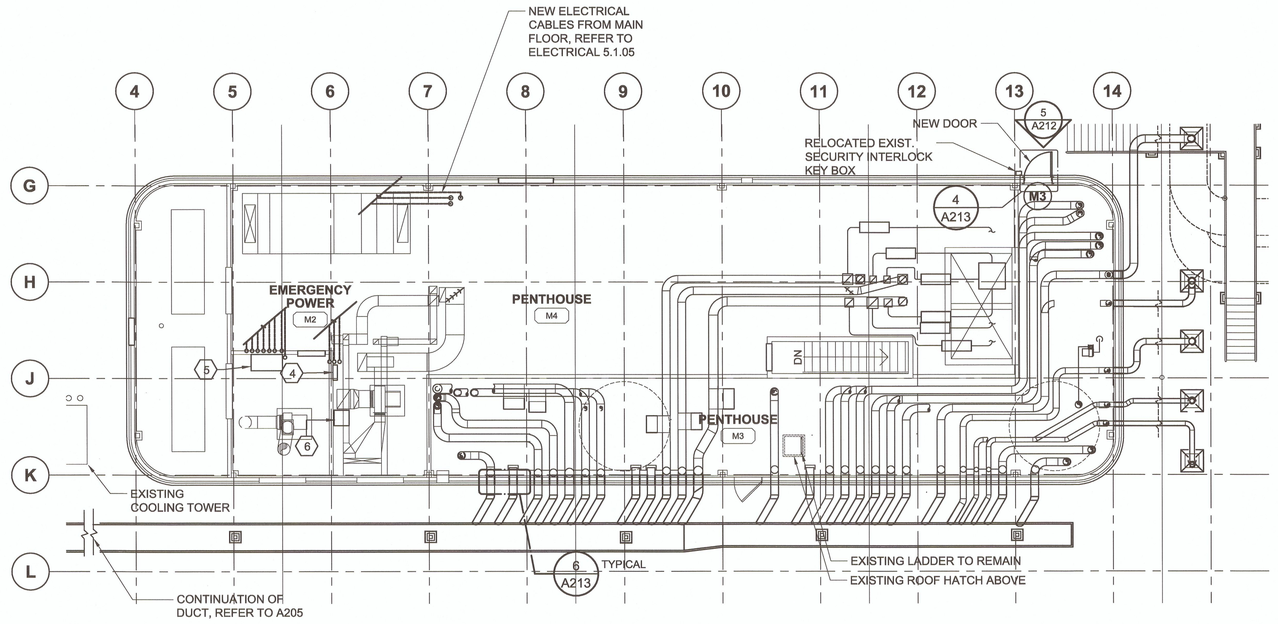

2 / A207 **NEW CENTRE PENTHOUSE FLOOR PLAN** 1 : 100

NORTH

Public Works and Government Services Canada / Travaux publics et Services gouvernementaux Canada

REAL PROPERTY SERVICES
Pacific Region
SERVICES IMMOBILIERS
Région de Pacifique

REGISTERED ARCHITECT RUSSELL MICHAEL CHADWICK VANCOUVER BRITISH COLUMBIA

Revision/ Revision	Description/Description	Date/Date
5		
4		
3	ISSUED FOR TENDER	2017-07-13
2	ISSUED FOR 100% CD	2017-05-09
1	PRE-TENDER CD FOR CLIENT REVIEW	2017-04-05
0	60% CD REVIEW	2017-03-03

Client/client

CANADIAN FOOD INSPECTION AGENCY

Project title/Titre du projet

3155 WILLINGDON GREEN BURNABY, BC

CFIA EXHAUST MANIFOLD REPLACEMENT

Consultant Signature Only

Designed by/Concept par
RC

Drawn by/Dessine par
LM

PWGSC Project Manager/Administrateur de Projets TPSGC

Regional Manager, Architectural and Engineering Services, Gestionnaire régionale, Services d'architectural et de génie, TPSGC

Drawing title/Titre du dessin

CENTRE PENTHOUSE EXISTING/ DEMOLITION AND NEW PLANS

Project No./No. du projet	Sheet/ Feuille	Revision no./ La Révision no.
39903-150591	A207	3

PWGSC – A1 – 841X594

0 10 20 30 40 50 60 70 80 90 100mm

DM5XXXXXX

DEMOLITION NOTES:

1. CUT THROUGH EXISTING ALUMINUM CLADDING, FELT PAPER, GWB SHEATHING, BATT INSULATION AND POLY VAPOUR BARRIER TO FIT IN NEW STAINLESS SLEEVES. COORDINATE LOCATION WITH MECHANICAL

2. EXISTING FUME EXHAUST FILTER IN (FEF-7) TO BE RELOCATED, REFER TO 2/A208 AND MECHANICAL DRAWINGS M-210/M-211

LEGEND:

---------- TO BE DEMOLISHED

———— TO REMAIN

———— NEW

TO BE REMOVED

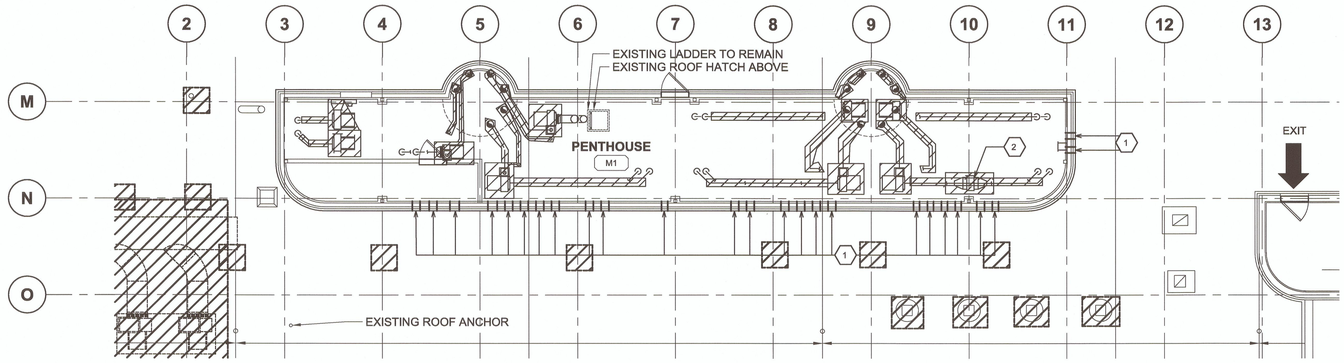

1 A208 **SOUTH PENTHOUSE - EXISTING & DEMOLITION PLAN**

1 : 100

NORTH

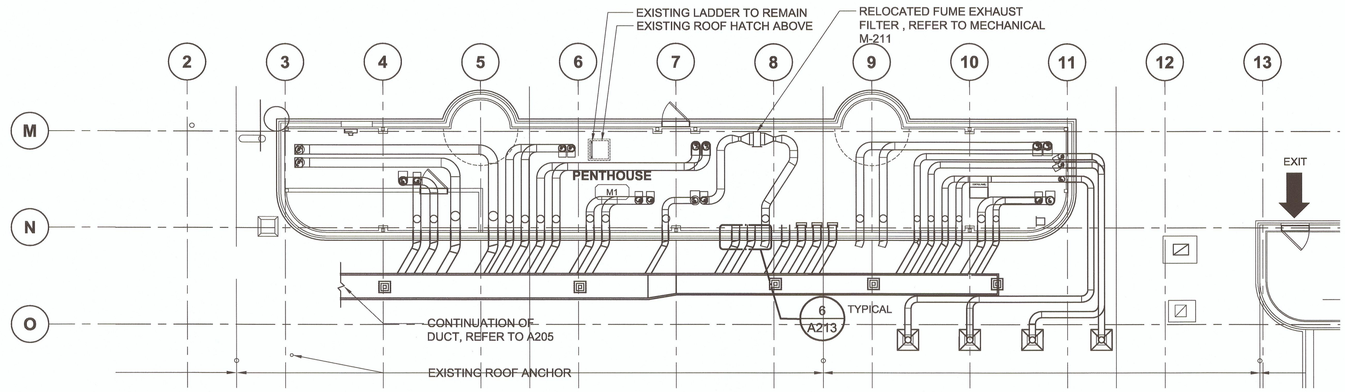

2 A208 **NEW SOUTH PENTHOUSE FLOOR PLAN**

1 : 100

NORTH

Public Works and Government Services Canada
Travaux publics et Services gouvernementaux Canada

REAL PROPERTY SERVICES
Pacific Region
SERVICES IMMOBILIERS
Région de Pacifique

REGISTERED ARCHITECT * RUSSELL MICHAEL ORLOFF * VANCOUVER BRITISH COLUMBIA

Revision/ Revision	Description/Description	Date/Date
5		
4		
3	ISSUED FOR TENDER	2017-07-13
2	ISSUED FOR 100% CD	2017-05-09
1	PRE-TENDER CD FOR CLIENT REVIEW	2017-04-05
0	50% CD REVIEW	2017-03-03

Client/client

CANADIAN FOOD INSPECTION AGENCY

Project title/Titre du projet

3155 WILLINGDON GREEN BURNABY, BC

CFIA EXHAUST MANIFOLD REPLACEMENT

Consultant Signature Only

Designed by/Concept par
RC

Drawn by/Dessine par
LM

PWGSC Project Manager/Administrateur de Projets TPSGC

Regional Manager, Architectural and Engineering Services Gestionnaire régionale, Services d'architectural et de génie, TPSGC

Drawing title/Titre du dessin

SOUTH PENTHOUSE EXISTING/DEMOLITION AND NEW PLANS

Project No./No. du projet	Sheet/ Feuille	Revision no./ La Révision no.
39903-150591	**A208**	**3**

PWGSC – A1 – 841X594

0 10 20 30 40 50 60 70 80 90 100mm

DM5XXXXXX

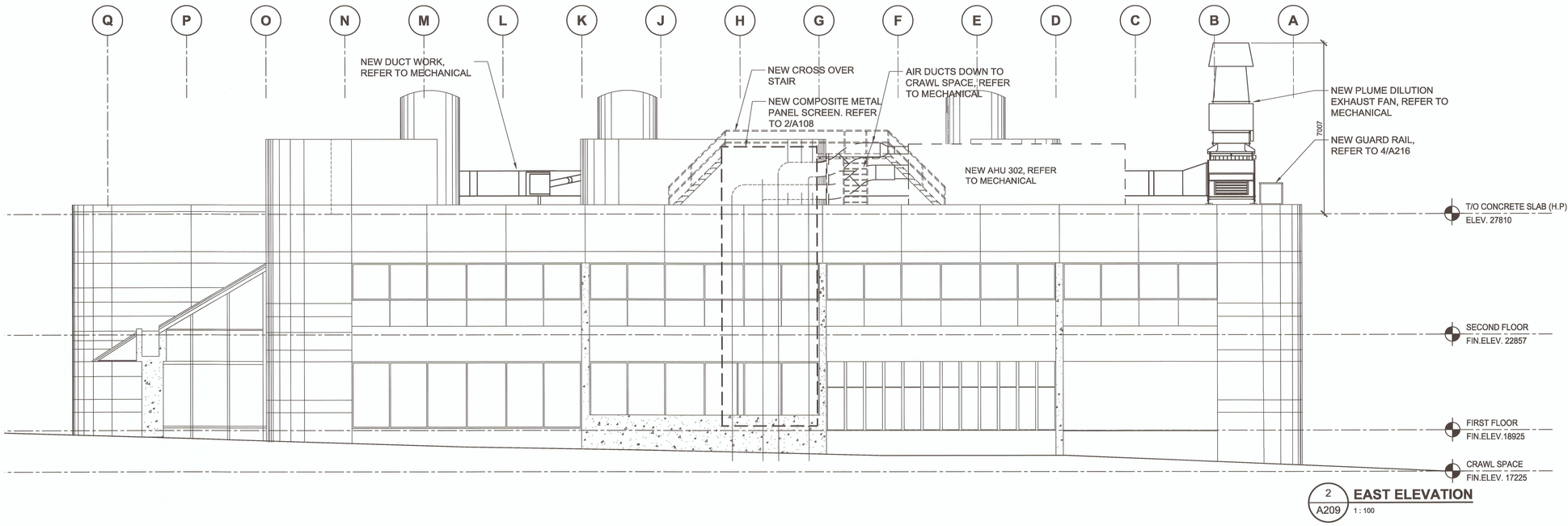

2 / A209 **EAST ELEVATION** 1 : 100

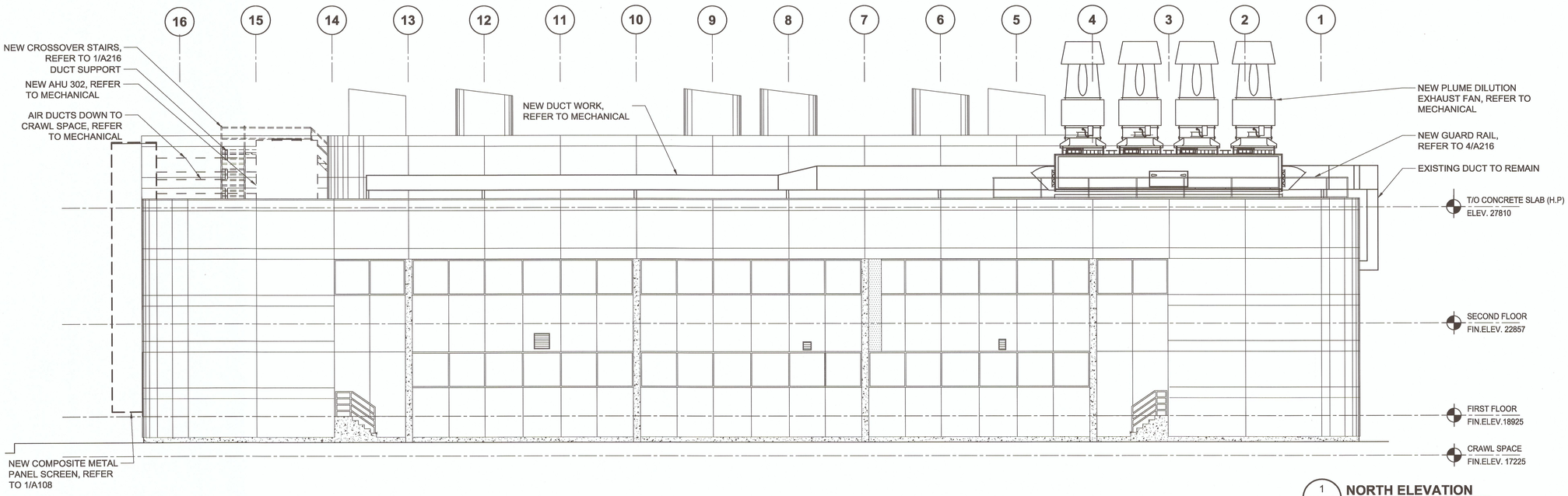

1 / A209 **NORTH ELEVATION** 1 : 100

Public Works and Government Services Canada
Travaux publics et Services gouvernementaux Canada

REAL PROPERTY SERVICES
Pacific Region
SERVICES IMMOBILIERS
Région de Pacifique

REGISTERED ARCHITECT
MICHAEL CHERNOFF
VANCOUVER
BRITISH COLUMBIA

Revision/ Revision	Description/Description	Date/Date
5		
4		
3	ISSUED FOR TENDER	2017-07-13
2	ISSUED FOR 100% CD	2017-05-09
1	PRE-TENDER CD FOR CLIENT REVIEW	2017-04-05
0	50% CD REVIEW	2017-03-03

Client/client

CANADIAN FOOD INSPECTION AGENCY

Project title/Titre du projet

3155 WILLINGDON GREEN BURNABY, BC

CFIA EXHAUST MANIFOLD REPLACEMENT

Consultant Signature Only

Designed by/Concept par
RC

Drawn by/Dessine par
LM

PWGSC Project Manager/Administrateur de Projets TPSGC

Regional Manager, Architectural and Engineering Services
Gestionnaire régionale, Services d'architectural et de génie, TPSGC

Drawing title/Titre du dessin

NEW NORTH AND EAST ELEVATIONS

Project No./No. du projet	Sheet/Feuille	Revision no./ La Révision no.
39903-150591	A209	3

PWGSC – A1 – 841X594

0 10 20 30 40 50 60 70 80 90 100mm

DM5XXXXXX

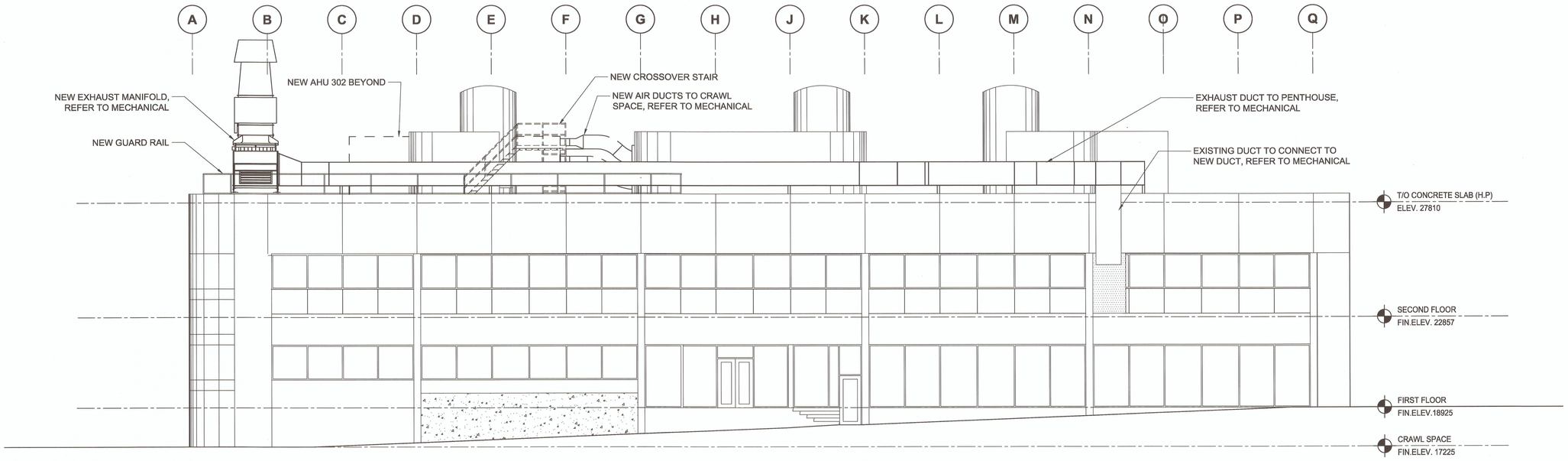

2 / A210 **WEST ELEVATION**
1 : 100

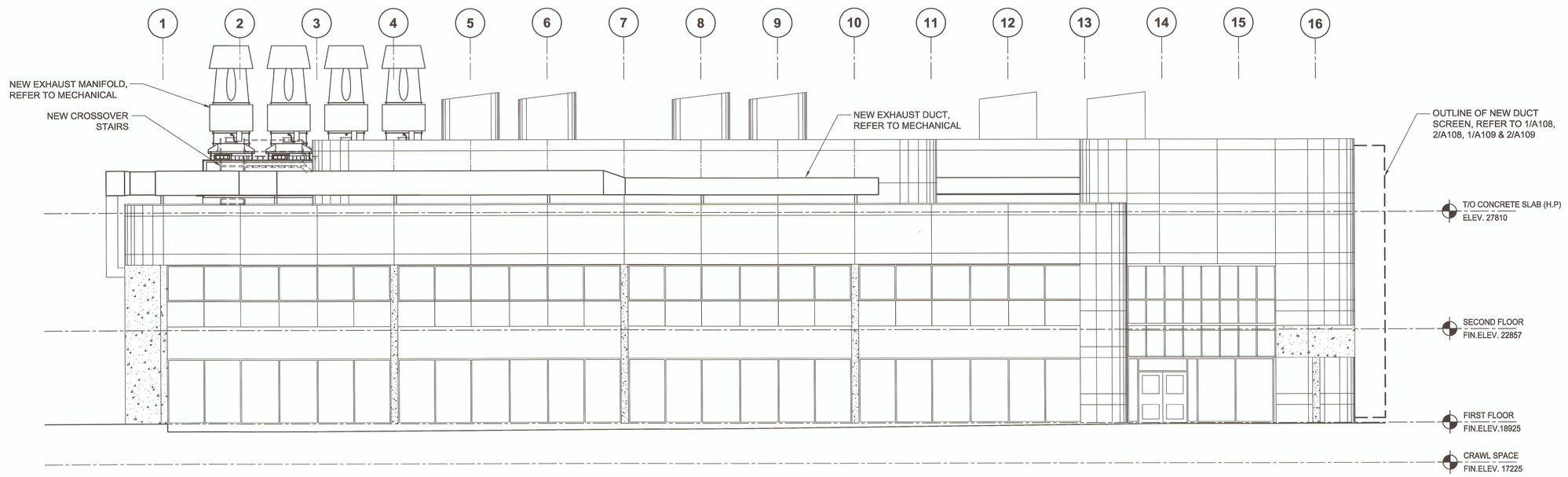

1 / A210 **SOUTH ELEVATION**
1 : 100

Public Works and Government Services Canada
Travaux publics et Services gouvernementaux Canada

REAL PROPERTY SERVICES
Pacific Region
SERVICES IMMOBILIERS
Région de Pacifique

REGISTERED ARCHITECT
RUSSELL MICHAEL BRANDOF
VANCOUVER
BRITISH COLUMBIA

Revision/ Revision	Description/Description	Date/Date
5		
4		
3	ISSUED FOR TENDER	2017-07-13
2	ISSUED FOR 100% CD	2017-05-09
1	PRE-TENDER CD FOR CLIENT REVIEW	2017-04-05
0	50% CD REVIEW	2017-03-03

Client/client

CANADIAN FOOD INSPECTION AGENCY

Project title/Titre du projet
3155 WILLINGDON GREEN
BURNABY, BC

CFIA
EXHAUST MANIFOLD REPLACEMENT

Consultant Signature Only

Designed by/Concept par
RC

Drawn by/Dessine par
LM

PWGSC Project Manager/Administrateur de Projets TPSGC

Regional Manager, Architectural and Engineering Services
Gestionnaire régionale, Services d'architectural et de génie, TPSGC

Drawing title/Titre du dessin
NEW SOUTH AND WEST ELEVATIONS

Project No./No. du projet	Sheet/ Feuille	Revision no./ La Révision no.
39903-150591	**A210**	**3**

PWGSC – A1 – 841X594

0 10 20 30 40 50 60 70 80 90 100mm

DM5XXXXXX

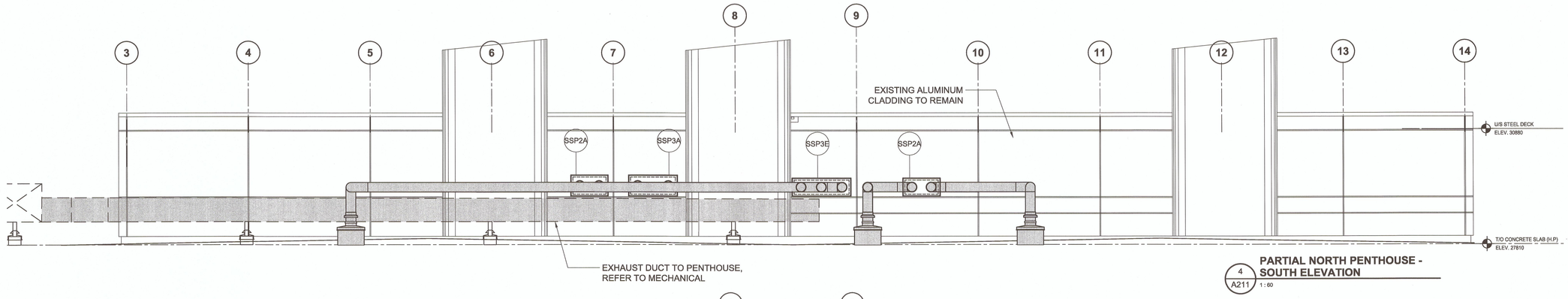

4 A211 **PARTIAL NORTH PENTHOUSE - SOUTH ELEVATION** 1 : 60

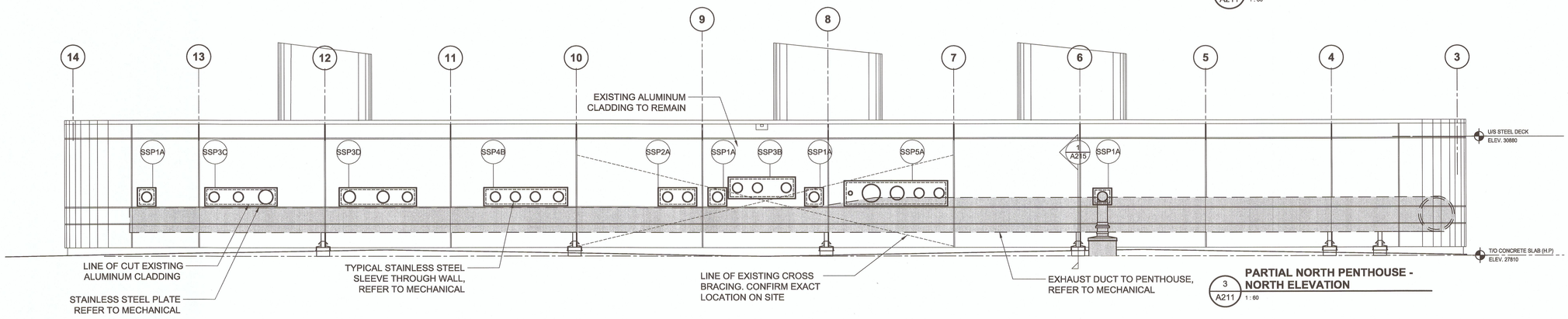

3 A211 **PARTIAL NORTH PENTHOUSE - NORTH ELEVATION** 1 : 60

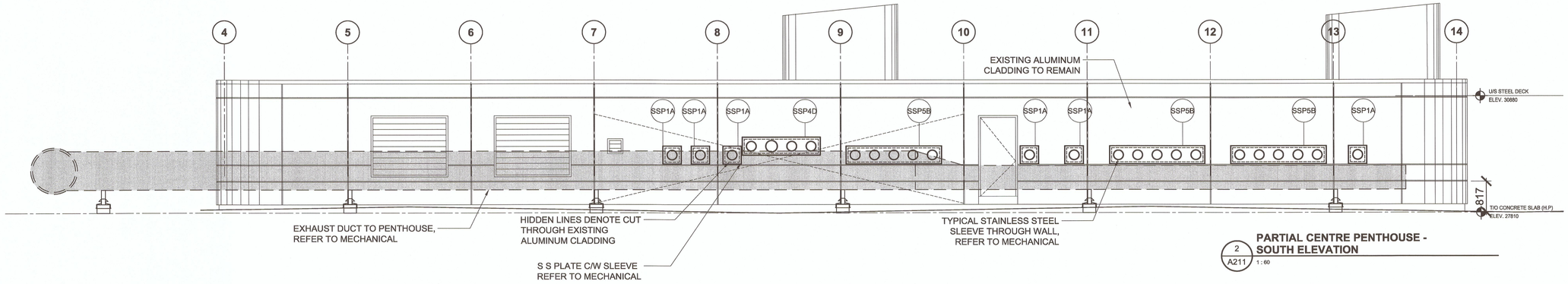

2 A211 **PARTIAL CENTRE PENTHOUSE - SOUTH ELEVATION** 1 : 60

LEGEND:

DUCT IN FORGROUND

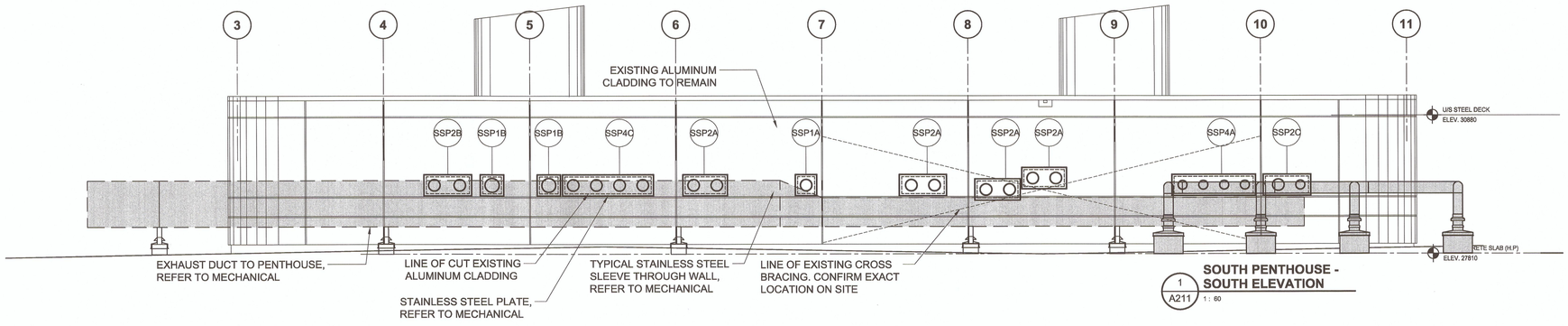

1 A211 **SOUTH PENTHOUSE - SOUTH ELEVATION** 1 : 60

PWGSC – A1 – 841X594

0 10 20 30 40 50 60 70 80 90 100mm

DM5XXXXXX

Public Works and Government Services Canada / Travaux publics et Services gouvernementaux Canada

REAL PROPERTY SERVICES
Pacific Region
SERVICES IMMOBILIERS
Région de Pacifique

REGISTERED ARCHITECT * RUSSELL MICHAEL SANDOF * VANCOUVER BRITISH COLUMBIA

Revision/ Revision	Description/Description	Date/Date
5		
4		
3	ISSUED FOR TENDER	2017-07-13
2	ISSUED FOR 100% CD	2017-05-09
1	PRE-TENDER CD FOR CLIENT REVIEW	2017-04-05
0	50% CD REVIEW	2017-03-03

Client/client

CANADIAN FOOD INSPECTION AGENCY

Project title/Titre du projet
3155 WILLINGDON GREEN BURNABY, BC

CFIA EXHAUST MANIFOLD REPLACEMENT

Consultant Signature Only

Designed by/Concept par
RC

Drawn by/Dessine par
LM

PWGSC Project Manager/Administrateur de Projets TPSGC

Regional Manager, Architectural and Engineering Services
Gestionnaire régionale, Services d'architectural et de génie, TPSGC

Drawing title/Titre du dessin
SOUTH/CENTRE/NORTH PENTHOUSE ELEVATIONS (SHOWING DUCT SLEEVES THROUGH WALL)

Project No./No. du projet	Sheet/Feuille	Revision no./ La Révision no.
39903-150591	A211	3

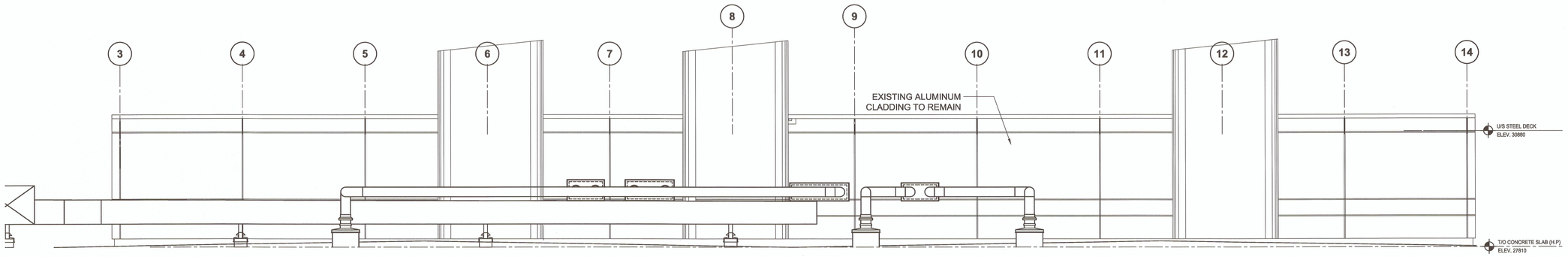

4 A212 — **PARTIAL NORTH PENTHOUSE - SOUTH ELEVATION** — 1 : 60

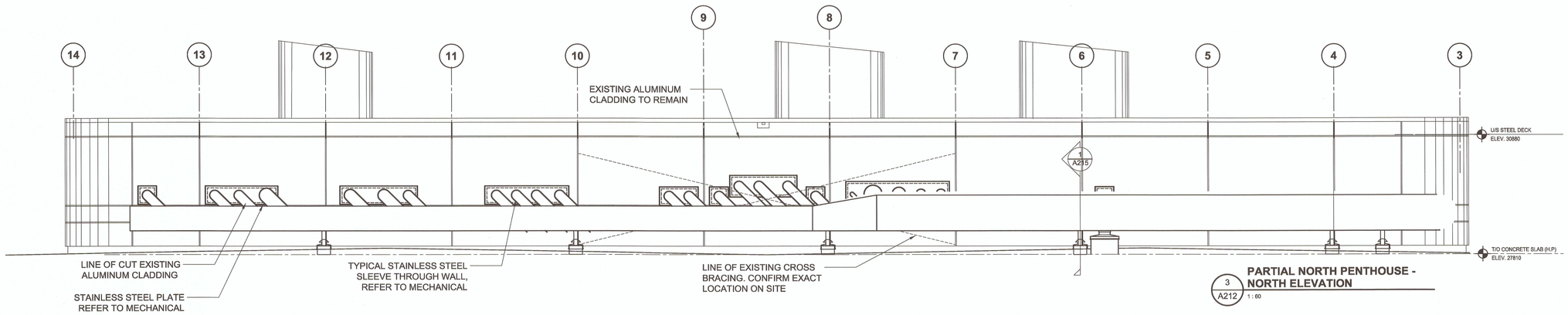

3 A212 — **PARTIAL NORTH PENTHOUSE - NORTH ELEVATION** — 1 : 60

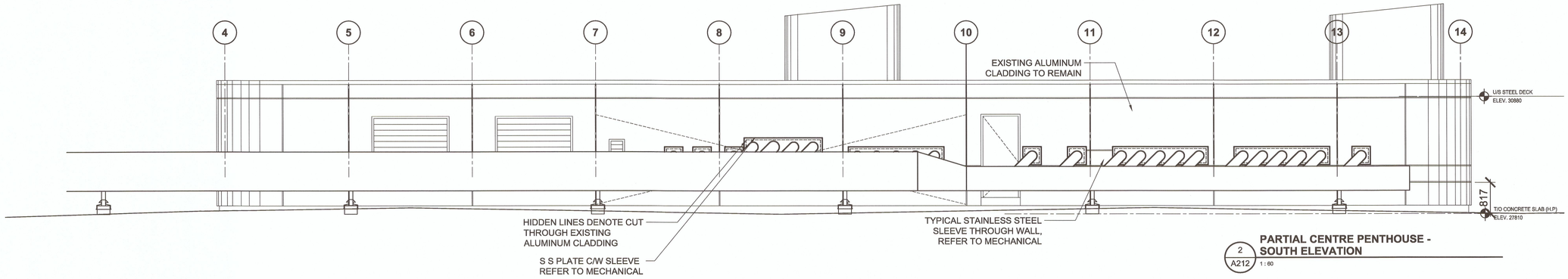

2 A212 — **PARTIAL CENTRE PENTHOUSE - SOUTH ELEVATION** — 1 : 60

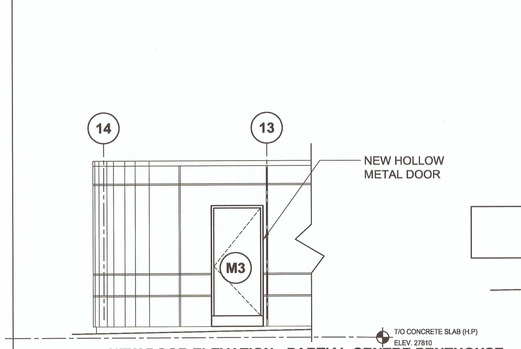

5 A211 — **NEW DOOR ELEVATION - PARTIAL CENTRE PENTHOUSE - NORTH ELEVATION** — 1 : 60

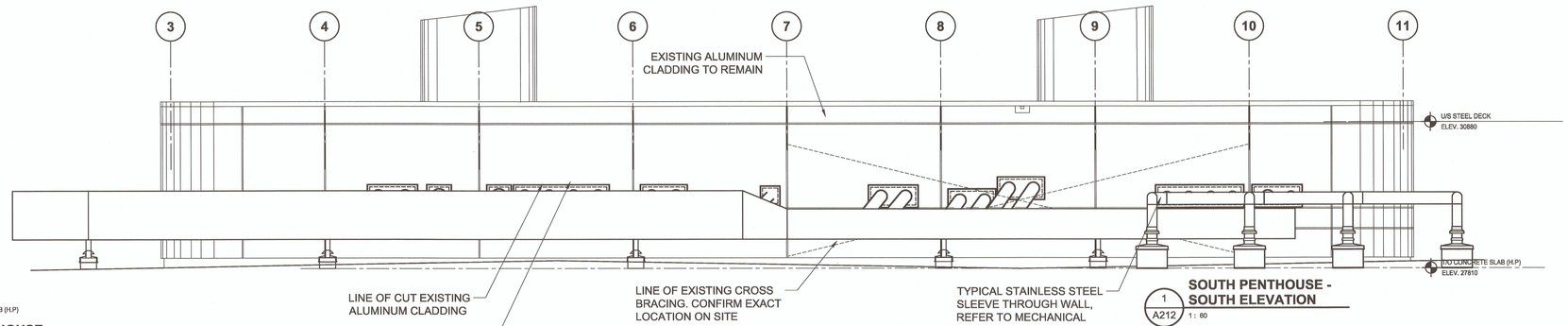

1 A212 — **SOUTH PENTHOUSE - SOUTH ELEVATION** — 1 : 60

PWGSC – A1 – 841X594

0 10 20 30 40 50 60 70 80 90 100mm

Public Works and Government Services Canada / Travaux publics et Services gouvernementaux Canada

REAL PROPERTY SERVICES
Pacific Region
SERVICES IMMOBILIERS
Région de Pacifique

REGISTERED ARCHITECT — RUSSELL MICHAEL KUDNOFF — VANCOUVER — BRITISH COLUMBIA

Revision/ Revision	Description/Description	Date/Date
5		
4		
3	ISSUED FOR TENDER	2017-07-13
2	ISSUED FOR 100% CD	2017-05-09
1	PRE-TENDER CD FOR CLIENT REVIEW	2017-04-05
0	50% CD REVIEW	2017-03-03

Client/client

CANADIAN FOOD INSPECTION AGENCY

Project title/Titre du projet

3155 WILLINGDON GREEN BURNABY, BC

CFIA EXHAUST MANIFOLD REPLACEMENT

Consultant Signature Only

Designed by/Concept par
RC

Drawn by/Dessine par
LM

PWGSC Project Manager/Administrateur de Projets TPSGC

Regional Manager, Architectural and Engineering Services
Gestionnaire régionale, Services d'architectural et de génie, TPSGC

Drawing title/Titre du dessin

SOUTH/CENTRE/NORTH PENTHOUSE ELEVATIONS (SHOWING DUCT WORK INFRONT)

Project No./No. du projet	Sheet/ Feuille	Revision no./ La Révision no.
39903-150591	A212	3

DM5XXXXXX

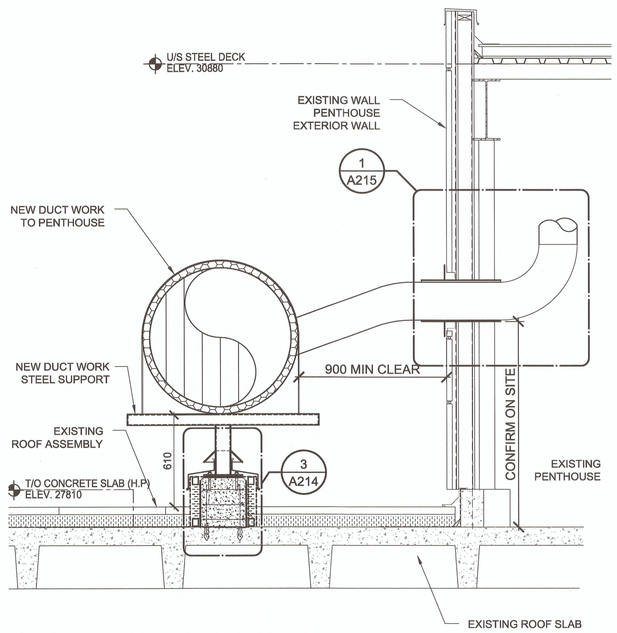

7 A213 **SECTION - TYPICAL NEW DUCT WORK SUPPORT**
1:50 REF. DWG 1/A205

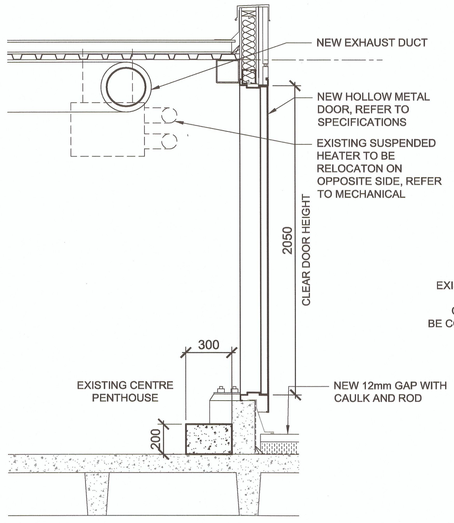

5 A213 **SECTION - NEW DOOR AT CENTRE PENTHOUSE**
1:50 REF. DWG 4/A213

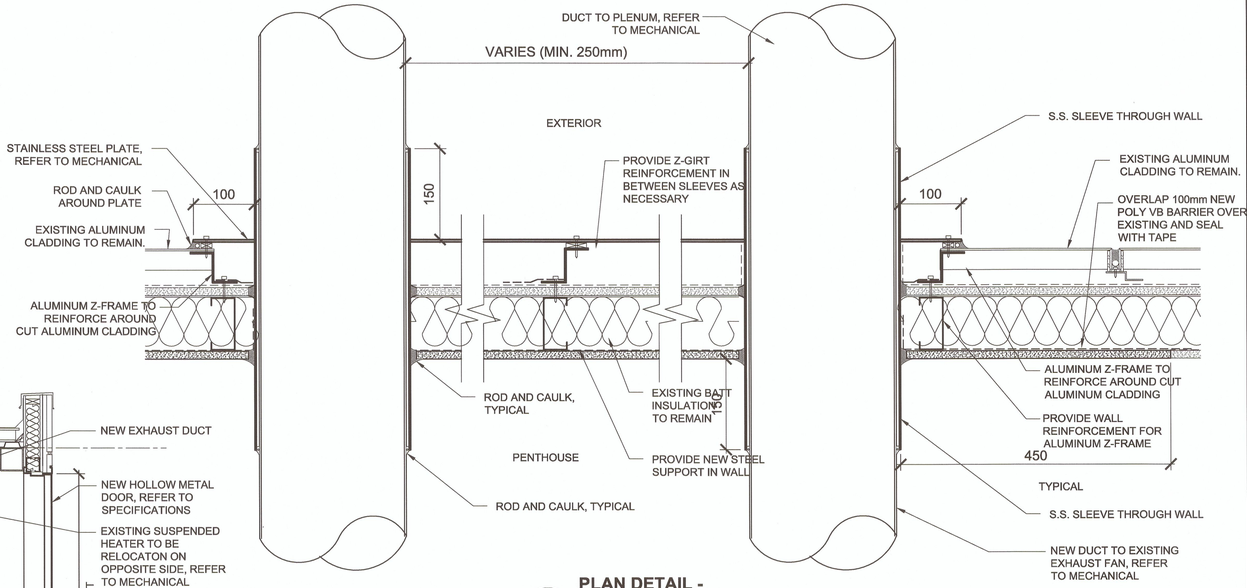

6 A213 **PLAN DETAIL - TYPICAL SLEEVES THROUGH WALL**
1:5 REF. DWG 2/A206

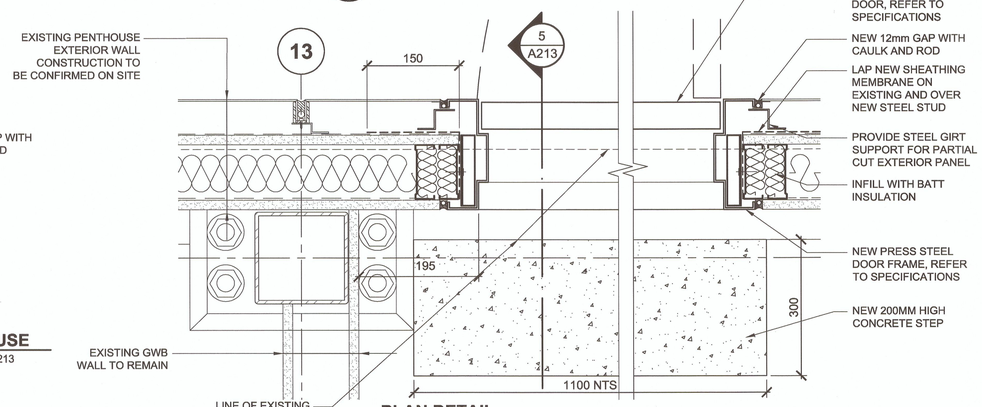

4 A213 **PLAN DETAIL - NEW DOOR AT CENTRE PENTHOUSE**
1:5 REF. DWG 2/A207

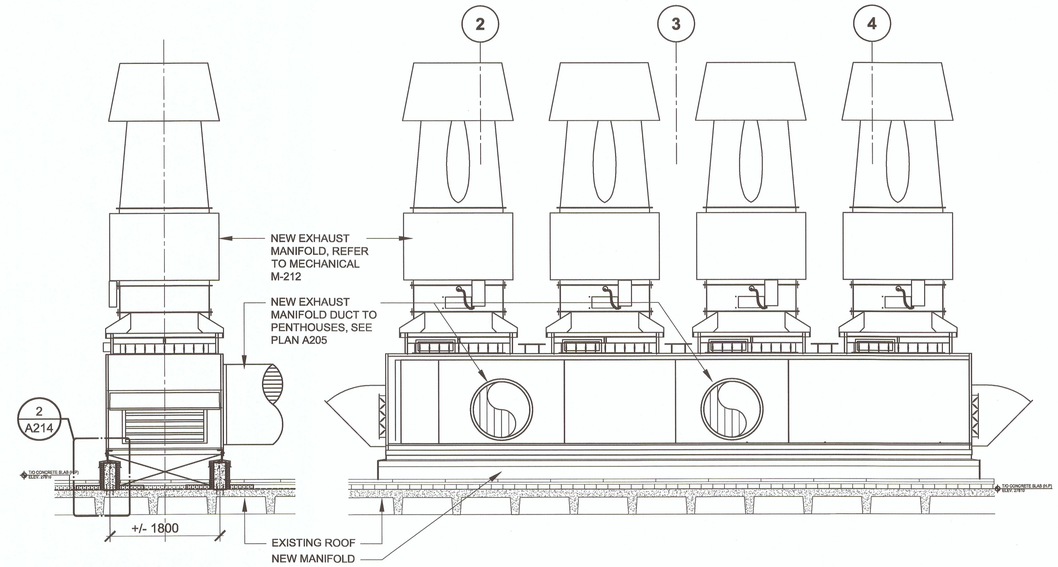

3 A213 **SECTION - NEW EXHAUST MANIFOLD**
1:50 REF. DWG 1/A213

2 A213 **ELEVATION - NEW EXHAUST MANIFOLD**
1:50 REF. DWG 1/A213

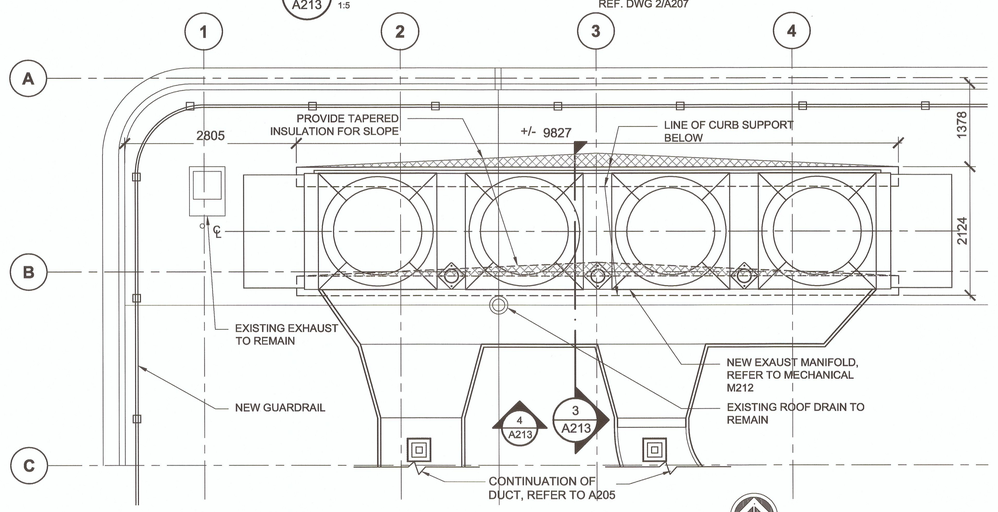

1 A213 **PLAN DETAIL - NEW EXHAUST MANIFOLD**
1:50 REF. DWG 1/A205

NORTH

PWGSC – A1 – 841X594

0 10 20 30 40 50 60 70 80 90 100mm

Public Works and Government Services Canada / Travaux publics et Services gouvernementaux Canada

REAL PROPERTY SERVICES
Pacific Region
SERVICES IMMOBILIERS
Région de Pacifique

REGISTERED ARCHITECT RUSSELL MICHAEL CHERKOFF VANCOUVER BRITISH COLUMBIA

Revision/ Revision	Description/Description	Date/Date
5		
4		
3	ISSUED FOR TENDER	2017-07-13
2	ISSUED FOR 100% CD	2017-05-09
1	PRE-TENDER CD FOR CLIENT REVIEW	2017-04-05
0	50% CD REVIEW	2017-03-03

Client/client

CANADIAN FOOD INSPECTION AGENCY

Project title/Titre du projet

3155 WILLINGDON GREEN
BURNABY, BC

CFIA EXHAUST MANIFOLD REPLACEMENT

Consultant Signature Only

Designed by/Concept par

Drawn by/Dessine par
LM 16/12/2015

PWGSC Project Manager/Administrateur de Projets TPSGC
PWGSC-PROJECT_MANAGER

Regional Manager, Architectural and Engineering Services / Gestionnaire régionale, Services d'architectural et de génie, TPSGC
PWGSC-REGIONAL_MANAGER

Drawing title/Titre du dessin

ELEVATION, SECTIONS AND PLAN DETAILS

Project No./No. du projet	Sheet/ Feuille	Revision no./ La Révision no.
39903-150591	**A213**	**2**

DM5XXXXXX

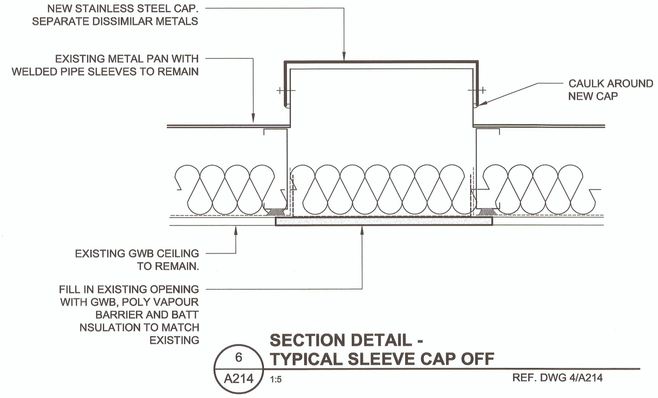

SECTION DETAIL - TYPICAL SLEEVE CAP OFF

6 / A214 — 1:5 — REF. DWG 4/A214

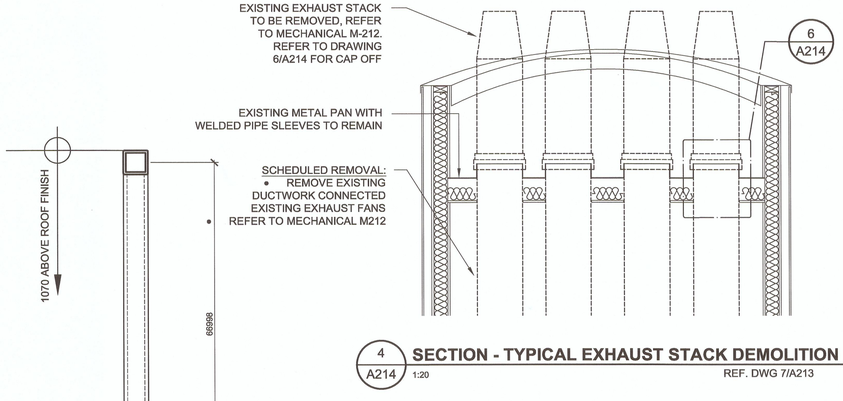

SECTION - TYPICAL EXHAUST STACK DEMOLITION

4 / A214 — 1:20 — REF. DWG 7/A213

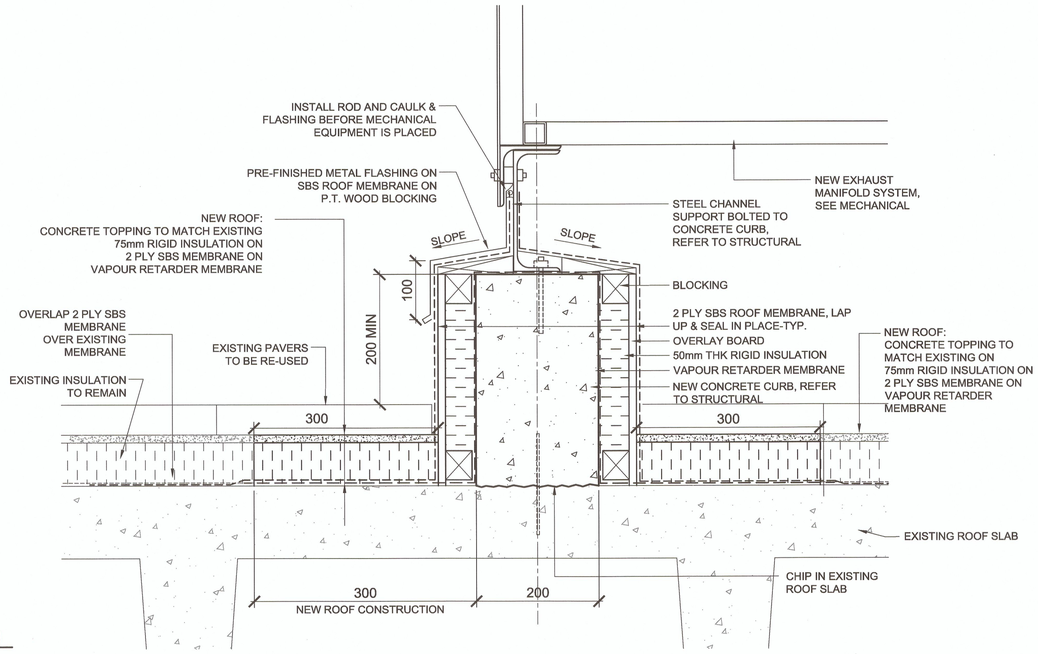

DETAIL SECTION - EXHAUST MANIFOLD CURB

2 / A214 — 1:5 — REF. DWG 3/A213

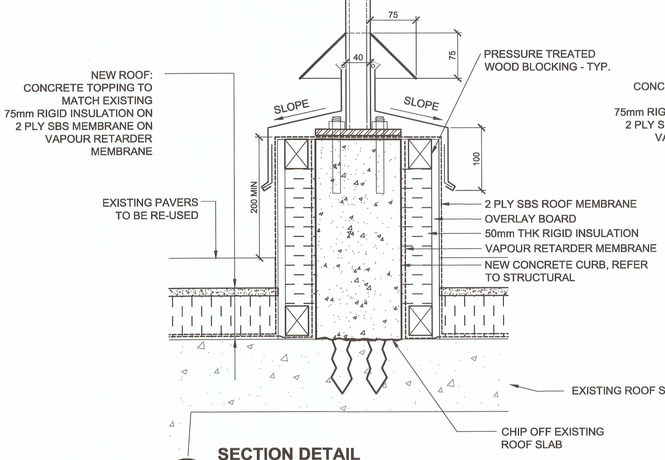

SECTION DETAIL TYPICAL ROOF GUARD RAIL SUPPORT

5 / A214 — 1:5

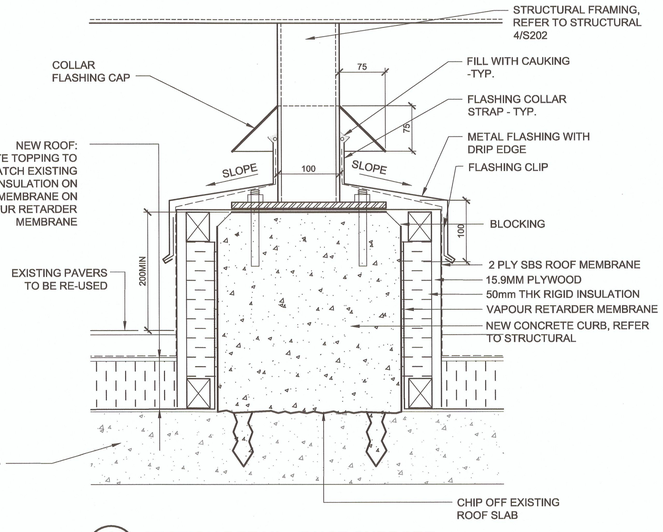

SECTION DETAIL - DUCT SUPPORT

3 / A214 — 1:5 — REF. DWG 7/A213

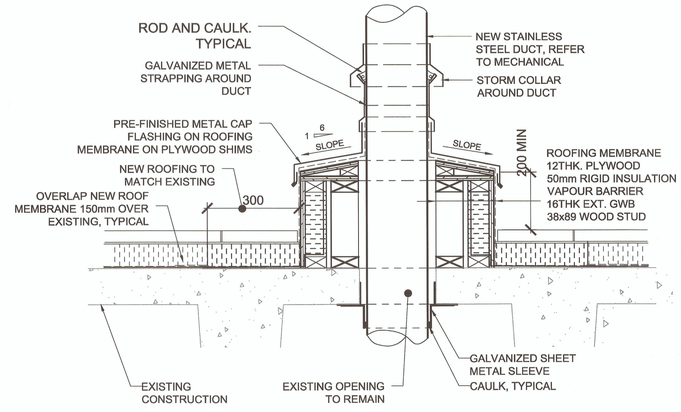

SECTION DETAIL - TYPICAL NEW DUCT THROUGH ROOF

1 / A214 — 1:10 — REF. DWG 2/A206

0 10 20 30 40 50 60 70 80 90 100mm

PWGSC — A1 — 841X594

Public Works and Government Services Canada / Travaux publics et Services gouvernementaux Canada

REAL PROPERTY SERVICES
Pacific Region
SERVICES IMMOBILIERS
Région de Pacifique

REGISTERED ARCHITECT RUSSELL MICHAEL CHEADLE VANCOUVER BRITISH COLUMBIA

Revision/ Revision	Description/Description	Date/Date
5		
4		
3	ISSUED FOR TENDER	2017-07-13
2	ISSUED FOR 100% CD	2017-05-09
1	PRE-TENDER CD FOR CLIENT REVIEW	2017-04-05
0	50% CD REVIEW	2017-03-03

Client/client

CANADIAN FOOD INSPECTION AGENCY

Project title/Titre du projet
3155 WILLINGDON GREEN BURNABY, BC

CFIA EXHAUST MANIFOLD REPLACEMENT

Consultant Signature Only

Designed by/Concept par
RC

Drawn by/Dessine par
LM

PWGSC Project Manager/Administrateur de Projets TPSGC

Regional Manager, Architectural and Engineering Services Gestionnaire régionale, Services d'architectural et de génie, TPSGC

Drawing title/Titre du dessin
SECTION DETAILS

Project No./No. du projet	Sheet/ Feuille	Revision no./ La Révision no.
39903-150591	A214	3

DM5XXXXXX

Public Works and Government Services Canada
Travaux publics et Services gouvernementaux Canada

REAL PROPERTY SERVICES
Pacific Region
SERVICES IMMOBILIERS
Région de Pacifique

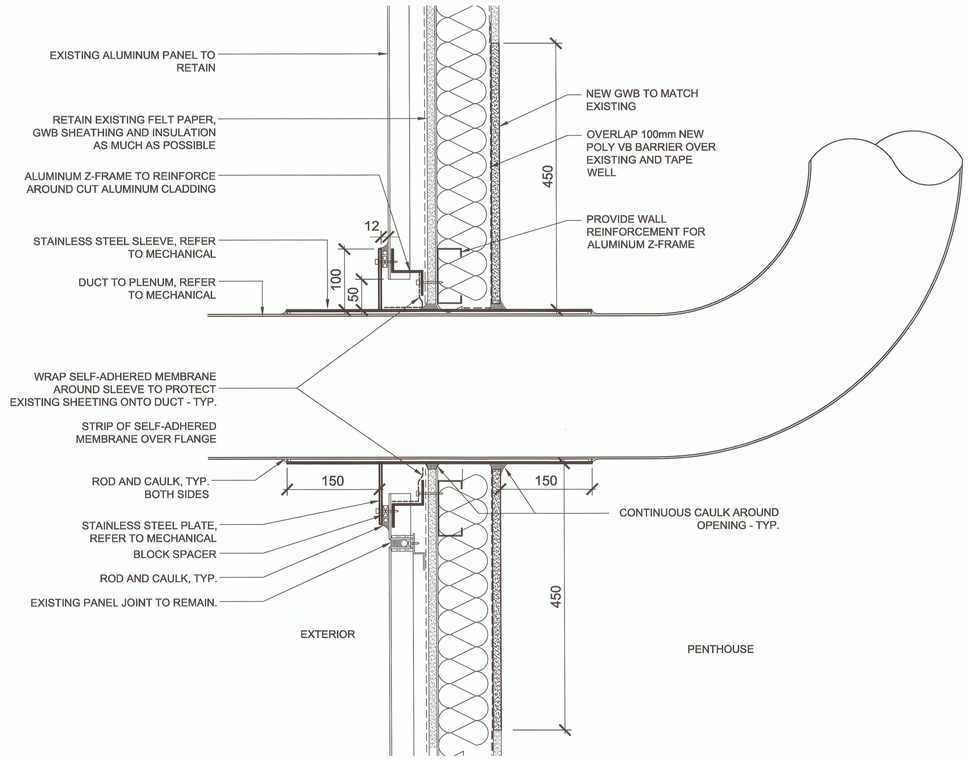

1 / A215 **DETAIL SECTION - DUCT THROUGH EXISTING WALL**
1:5

Revision/ Revision	Description/Description	Date/Date
5		
4		
3	ISSUED FOR TENDER	2017-07-13
2	ISSUED FOR 100% CD	2017-05-09
1	PRE-TENDER CD FOR CLIENT REVIEW	2017-04-05
0	50% CD REVIEW	2017-03-03

Client/client

CANADIAN FOOD INSPECTION AGENCY

Project title/Titre du projet

3155 WILLINGDON GREEN
BURNABY, BC

CFIA
EXHAUST MANIFOLD REPLACEMENT

Consultant Signature Only

Designed by/Concept par
RC

Drawn by/Dessiné par
LM

PWGSC Project Manager/Administrateur de Projets TPSGC
PWGSC-PROJECT_MANAGER

Regional Manager, Architectural and Engineering Services
Gestionnaire régionale, Services d'architectural et de génie, TPSGC
PWGSC-REGIONAL_MANAGER

Drawing title/Titre du dessin

SECTION DETAILS

Project No./No. du projet	Sheet/ Feuille	Revision no./ La Révision no.
39903-150591	**A215**	**3**

PWGSC – A1 – 841X594

0 10 20 30 40 50 60 70 80 90 100mm

DM5XXXXXX

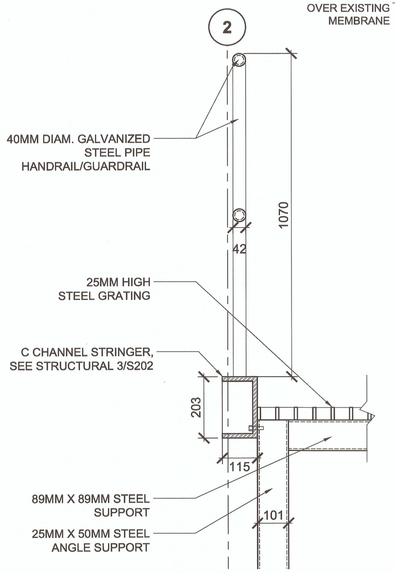

5 A216 **SECTION DETAIL - CROSSOVER STAIRS** 1:10

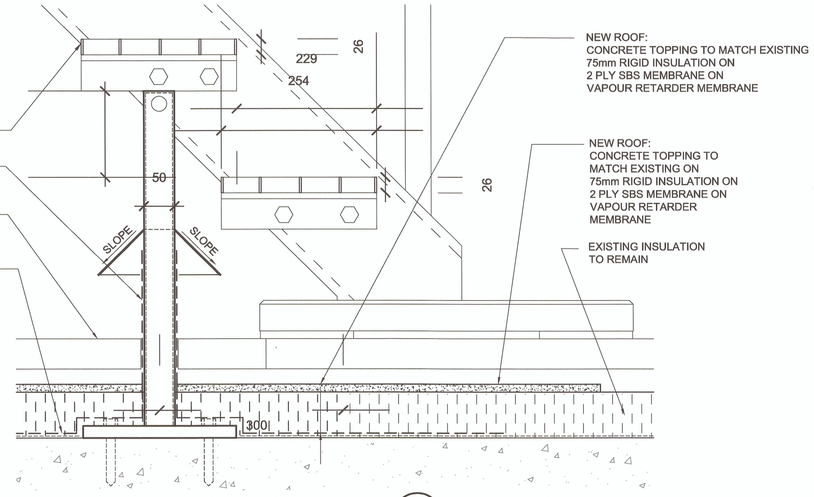

6 A216 **WEST CROSS OVER STAIRS** 1:5

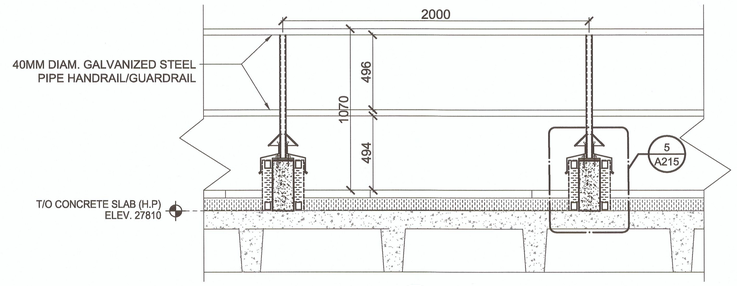

4 A216 **SECTION DETAIL - GUARDRAIL** 1:20

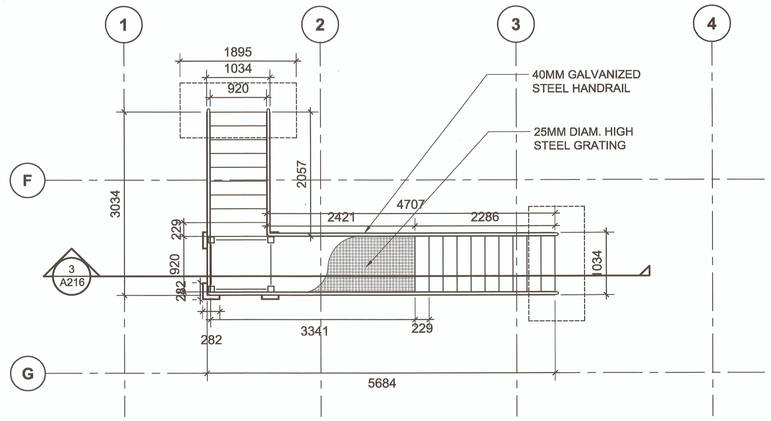

2 A216 **WEST CROSS OVER STAIRS** 1:50

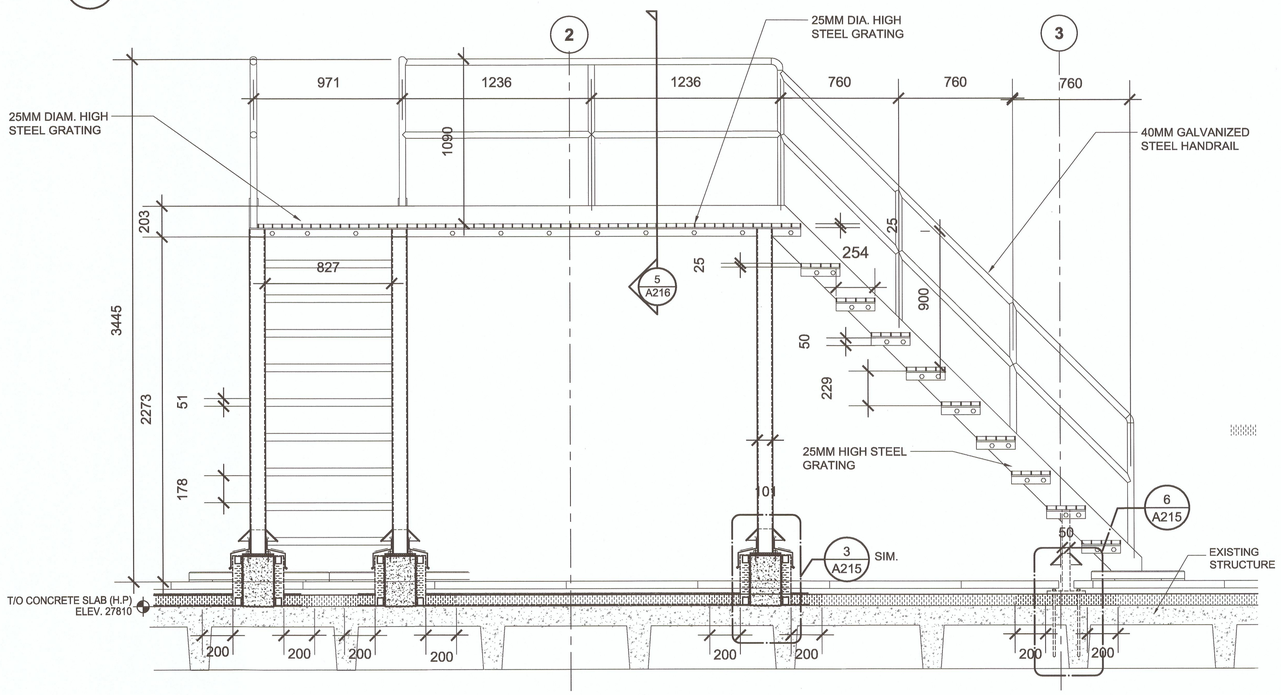

3 A216 **SECTION DETAIL - CROSS OVER STAIRS** 1:20

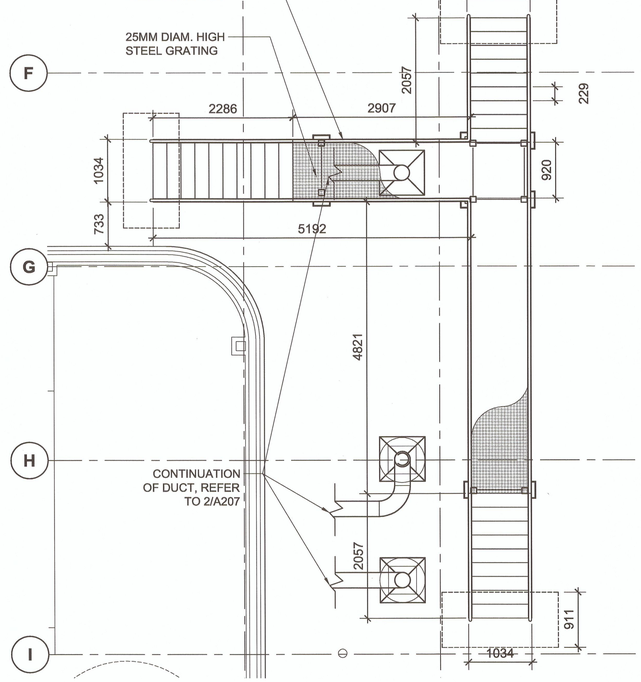

1 A216 **EAST CROSS OVER STAIRS PLAN** 1:50

Public Works and Government Services Canada / Travaux publics et Services gouvernementaux Canada

REAL PROPERTY SERVICES
Pacific Region
SERVICES IMMOBILIERS
Région de Pacifique

REGISTERED ARCHITECT RUSSELL MICHAEL KONOFF VANCOUVER BRITISH COLUMBIA

Revision/ Revision	Description/Description	Date/Date
5		
4		
3	ISSUED FOR TENDER	2017-07-13
2	ISSUED FOR 100% CD	2017-05-09
1	PRE-TENDER CD FOR CLIENT REVIEW	2017-04-05
0	50% CD REVIEW	2017-03-03

Client/client

CANADIAN FOOD INSPECTION AGENCY

Project title/Titre du projet
3155 WILLINGDON GREEN BURNABY, BC

CFIA EXHAUST MANIFOLD REPLACEMENT

Consultant Signature Only

Designed by/Concept par
RC

Drawn by/Dessine par
LM

PWGSC Project Manager/Administrateur de Projets TPSGC
PWGSC-PROJECT_MANAGER

Regional Manager, Architectural and Engineering Services / Gestionnaire régionale, Services d'architectural et de génie, TPSGC
PWGSC-REGIONAL_MANAGER

Drawing title/Titre du dessin
CROSS OVER STAIR PLANS, SECTIONS AND DETAILS

Project No./No. du projet	Sheet/ Feuille	Revision no./ La Révision no.
39903-150591	A216	3

PWGSC – A1 – 841X594

0 10 20 30 40 50 60 70 80 90 100mm

DM5XXXXXX

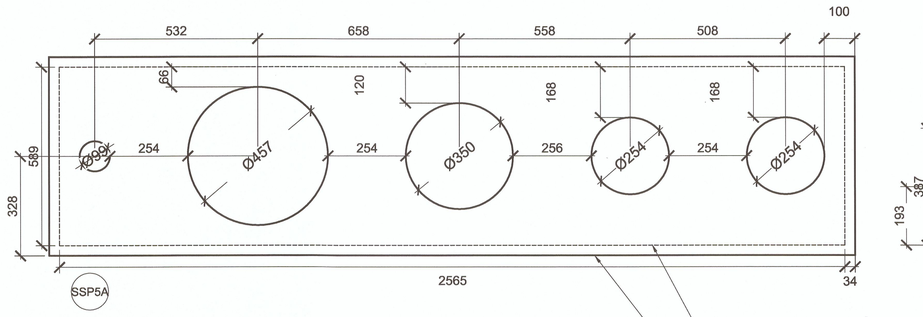

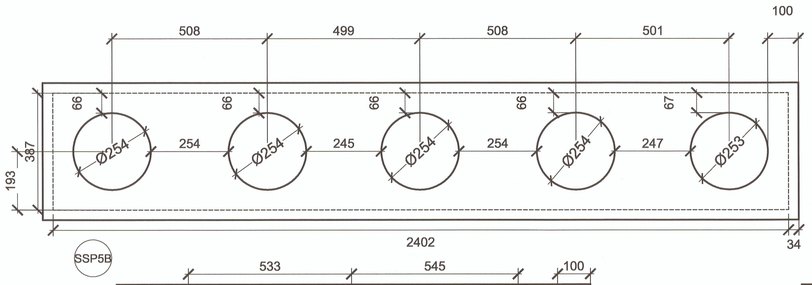

HIDDEN LINES DENOTE CUT THROUGH EXISTING ALUMINUM CLADDING

S S PLATE C/W SLEEVE REFER TO MECHANICAL

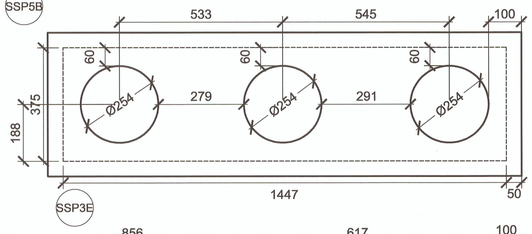

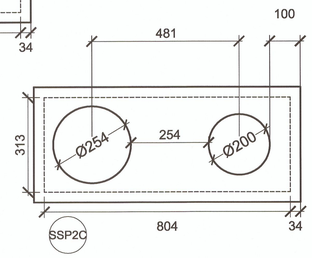

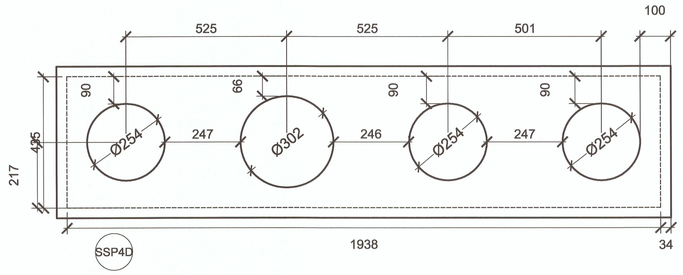

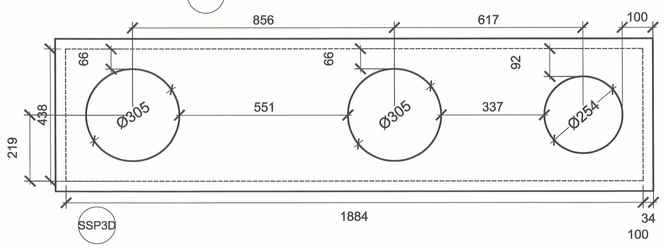

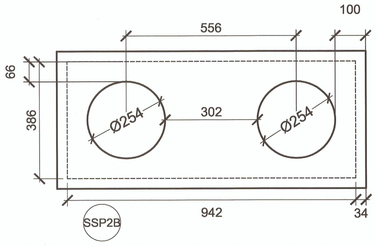

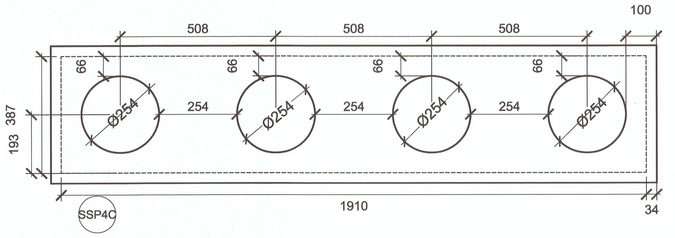

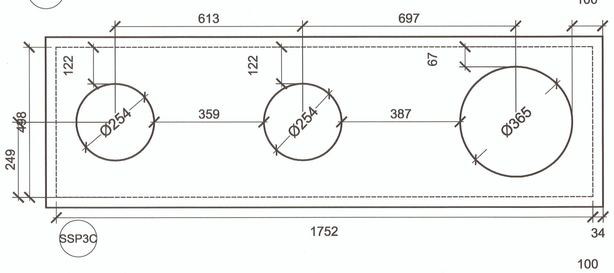

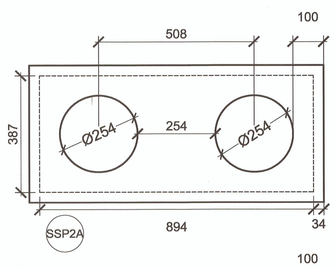

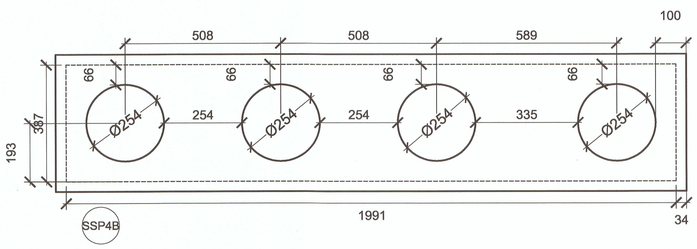

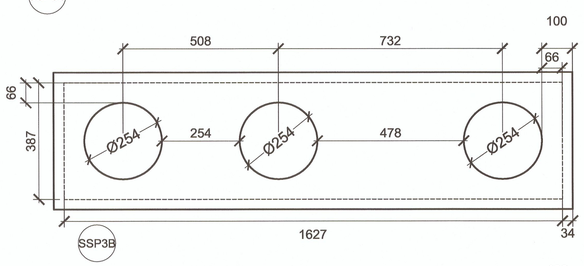

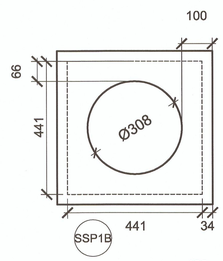

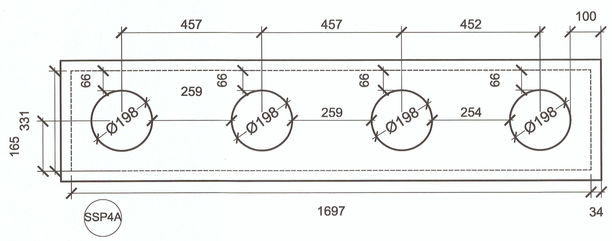

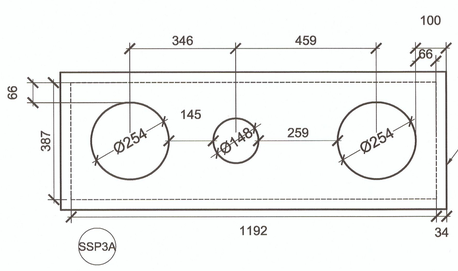

REFER TO SPEC. FOR STEEL GAUGE AND TYPE.

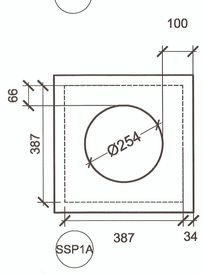

STAINLESS STEEL SLEEVE & PLATE SCHEDULE

1 / A217 1:10

PWGSC – A1 – 841X594

0 10 20 30 40 50 60 70 80 90 100mm

Public Works and Government Services Canada / Travaux publics et Services gouvernementaux Canada

REAL PROPERTY SERVICES
Pacific Region
SERVICES IMMOBILIERS
Région de Pacifique

REGISTERED ARCHITECT * RUSSELL MICHAEL GROOFF * BRITISH COLUMBIA

Revision/ Revision	Description/Description	Date/Date
5		
4		
3	ISSUED FOR TENDER	2017-07-13
2	ISSUED FOR 100% CD	2017-05-09
1	PRE-TENDER CD FOR CLIENT REVIEW	2017-04-05
0	50% CD REVIEW	2017-03-03

Client/client

CANADIAN FOOD INSPECTION AGENCY

Project title/Titre du projet
3155 WILLINGDON GREEN
BURNABY, BC

CFIA
EXHAUST MANIFOLD REPLACEMENT

Consultant Signature Only

Designed by/Concept par
RC

Drawn by/Dessine par
LM

PWGSC Project Manager/Administrateur de Projets TPSGC
PWGSC-PROJECT_MANAGER

Regional Manager, Architectural and Engineering Services / Gestionnaire régionale, Services d'architectural et de génie, TPSGC
PWGSC-REGIONAL_MANAGER

Drawing title/Titre du dessin
STAINLESS STEEL SLEEVE AND PLATE SCHEDULE

Project No./No. du projet	Sheet/ Feuille	Revision no./ La Révision no.
39903-150591	**A217**	**3**

DM5XXXXXX

DESIGN CODE

1. THE STRUCTURAL WORK SHOWN ON THE STRUCTURAL DRAWINGS HAS BEEN DESIGNED IN SUBSTANTIAL ACCORDANCE WITH THE BRITISH COLUMBIA BUILDING CODE 2012 WHICH IS BASED ON THE NATIONAL BUILDING CODE OF CANADA 2010.

FIELD REVIEW

1. FIELD REVIEW IS PROVIDED FOR THE WORK SHOWN ON THESE STRUCTURAL DRAWINGS. THIS REVIEW IS NOT A "FULL TIME" REVIEW BUT IS CONDUCTED WITH SUCH FREQUENCY AS IS DEEMED APPROPRIATE TO OBSERVE VARIOUS STAGES OF THE WORK AND TO ASCERTAIN THAT THE WORK IS IN GENERAL CONFORMANCE WITH THE PLANS AND SUPPORTING DOCUMENTS. FIELD REVIEW IS NOT CARRIED OUT FOR THE CONTRACTOR'S BENEFIT. IT REMAINS THE CONTRACTOR'S RESPONSIBILITY TO BUILD THE WORK IN CONFORMANCE WITH THE CONTRACT DOCUMENTS.

   WE WILL REVIEW SHOP DRAWINGS PERTAINING TO WORK SHOWN ON THESE DRAWINGS. THE EXTENT OF THIS REVIEW IS AT OUR SOLE DISCRETION AND IS FOR THE SOLE PURPOSE OF ASCERTAINING GENERAL CONFORMANCE WITH THE STRUCTURAL DESIGN CONCEPT. THE REVIEW IS NOT AN APPROVAL OF THE DESIGN, DETAILS, AND DIMENSIONS INHERENT IN THE SHOP DRAWINGS, RESPONSIBILITY FOR WHICH SHALL REMAIN WITH THE CONTRACTOR OR SUBCONTRACTOR SUBMITTING THEM. SUCH REVIEW SHALL NOT RELIEVE THE CONTRACTOR OR SUBCONTRACTOR OF HIS OR HER RESPONSIBILITY FOR ERRORS AND OMISSIONS IN THE SHOP DRAWINGS OR FOR MEETING ALL REQUIREMENTS OF THE CONTRACT DOCUMENTS.

2. PROVIDE 24 HOURS ADVANCE NOTICE OF EACH REQUIRED FIELD REVIEW. FIELD REVIEWS SHALL BE SCHEDULED TO BE CARRIED OUT DURING NORMAL BUSINESS HOURS UNLESS SPECIAL ARRANGEMENTS ARE MADE.

3. THE WORK TO BE REVIEWED SHALL BE GENERALLY COMPLETE.

MICRO PILES

1) MICRO PILE FOUNDATION DESIGN IS BASED ON THE GEOTECHNICAL REPORT

   BY: WSP CANADA INC.

   DATED: MARCH 29, 2017

2) ENSURE THAT THE REQUIREMENTS OUTLINED IN THE GEOTECHNICAL REPORT AND SHOWN ON THE STRUCTURAL DRAWINGS AND IN THE SPECIFICATION ARE UNDERSTOOD PRIOR TO COMMENCING WITH FOUNDATION WORK.

3) ALL MICRO PILES TO BE #18 REINFORCING STEEL BARS, DOUBLE CORROSION PROTECTED, Fy = 75 ksi, IN MINIMUM 200mm DIAMETER DRILLED HOLES COMPLETED WITH CASED HOLES, HIGH PRESSURE GROUTED (200–300 PSI).
   DO NOT WELD TO MINI–PILE BARS.

4) SEE GEOTECHNICAL REPORT FOR SPEICFIC REQUIREMENTS ON MATERIALS, INSTALLATION PROCEDURES, TESTING, ETC.

5) SEE GEOTECHNICAL REPORT FOR CASING REQUIREMENTS.

6) SEE ⊕ FOR LOCATIONS OF ALL MICRO PILES ON PLAN.

7) SEE MICRO PILE DETAIL FOR TYPICAL MICRO PILE CONFIGURATION AT PILECAP.

CONCRETE

1. CONCRETE PROPERTIES:

GENERAL (AREAS NOT INCLUDING PARKING)			
ELEMENT	COMPRESSIVE STRENGTH (MPa) 28 DAYS U.N.O.	EXPOSURE CLASS	COMMENTS
ALL CONCRETE	25 MPa	F–2	.

LIST OF STRUCTURAL DRAWINGS

S101 – AHUR GENERAL NOTES AND TYPICAL DETAILS

S102 – AHUR 101 & 102 FRAMING PLANS, CONCRETE PAD PLAN AND DETAILS

S103 – AHUR 101 & 102 FRAMING ELEVATION, SECTIONS AND DETAILS

S104 – AHUR 302 ROOF FRAMING PLAN AND DETAILS

DRAWINGS

1. THIS SET OF DRAWINGS SHOWS THE COMPLETED PROJECT. THE DRAWINGS DO NOT SHOW COMPONENTS THAT MAY BE NECESSARY FOR CONSTRUCTION SAFETY. THE GENERAL CONTRACTOR IS RESPONSIBLE FOR SAFETY IN AND ABOUT THE JOB SITE DURING CONSTRUCTION, AND THE DESIGN AND ERECTION OF ALL TEMPORARY STRUCTURES, FORMWORK, FALSE WORK, SHORING, ETC. REQUIRED TO COMPLETE THE WORK.

2. THE USE OF THESE DRAWINGS IS LIMITED TO THAT IDENTIFIED IN THE REVISIONS COLUMN. DO NOT CONSTRUCT FROM THESE DRAWINGS UNLESS MARKED "ISSUED FOR CONSTRUCTION" IN THE REVISIONS COLUMN, BY READ JONES CHRISTOFFERSEN LTD. THE DRAWINGS SHALL NOT BE USED FOR PRICING, COSTING, OR TENDER UNLESS SO INDICATED IN THE REVISION COLUMN. PRICING OR COSTING DRAWINGS ARE NOT COMPLETE AND ANY PRICES BASED ON PRICING OR COSTING DRAWINGS MUST INCLUDE ALLOWANCES FOR THIS.

3. THE INFORMATION ON THESE DRAWINGS SHALL NOT BE USED FOR ANY OTHER PROJECT OR WORKS. THE INFORMATION ON THESE DRAWINGS APPLIES SOLELY TO THIS PROJECT.

GENERAL

1. SECTION MARK SHOWN THUS 4 / S103 MEANS SECTION #4 ON DRAWING S103.

2. SEE ARCHITECTURAL, MECHANICAL AND ELECTRICAL DRAWINGS FOR SLEEVES, NAILERS, INSERTS, ETC., TO BE ENCASED IN CONCRETE.

3. SEE ARCHITECTURAL DRAWINGS FOR FLOOR AND ROOF ELEVATIONS, RECESSES, DRAINAGE SLOPES, ETC.

4. THE GENERAL CONTRACTOR SHALL REVIEW ALL THE DRAWINGS AND CHECK DIMENSIONS BEFORE CONSTRUCTION. REPORT DISCREPANCIES BETWEEN STRUCTURAL AND OTHER DISCIPLINES DRAWINGS FOR CLARIFICATION.

5. CONCRETE WORK
   SHALL CONFORM TO CSA A23.1, CSA A23.2, CSA A23.3 AND REFERENCED DOCUMENTS.

6. STRUCTURAL STEEL WORK
   SHALL CONFORM TO CSA S16 AND REFERENCED DOCUMENTS.

7. FIRE RESISTANCE RATINGS
   SEE ARCHITECTURAL DRAWINGS AND SPECIFICATIONS FOR PRECISE LOCATION OF REQUIRED FIRE RESISTANCE RATINGS.

8. DO NOT CUT OR DRILL ANY OPENINGS IN STRUCTURAL MEMBERS WITHOUT WRITTEN PERMISSION OF RJC.

9. REFER TO ARCHITECTURAL, MECHANICAL, ELECTRICAL, AND LANDSCAPE DRAWINGS FOR LOCATIONS, CONFIGURATIONS, EXTENT, AND SIZES OF ALL CURBS, UPSTANDS, DOWNTURNS; AND FOR OPENINGS THROUGH FLOORS AND WALLS FOR DUCTS, CONDUIT AND PIPING. PROVIDE FOR SAME.

10. ABBREVIATIONS:

A.B.	ANCHOR BOLT	L.L.H.	LONG LEG HORIZONTAL
ALT.	ALTERNATE	L.L.V.	LONG LEG VERTICAL
ARCH.	ARCHITECTURAL	LS.H.	LONG SIDE HORIZONTAL
B.C.E.	BOTTOM CHORD EXTENSION	L.S.V.	LONG SIDE VERTICAL
B.L.L.	BOTTOM LOWER LAYER	L.T.S.	LENGTH TO SUIT
BM.	BEAM	L.V.	LENGTH VARIES
BOT.	BOTTOM	L.W.	LONG WAY
B.U.L.	BOTTOM UPPER LAYER	MAX.	MAXIMUM
B.W.	BOTH WAYS	MECH.	MECHANICAL
CANTIL.	CANTILEVER	MIN.	MINIMUM
C.I.P.	CAST IN PLACE	N.F.	NEAR FACE
C.J.	CONTROL JOINT	N.I.C.	NOT IN CONTRACT
CL.	CENTER LINE	N.S.	NEAR SIDE
CLR.	CLEAR	N.T.S.	NOT TO SCALE
CONC.	CONCRETE	O.C.	ON CENTRE
CONT.	CONTINUOUS	O/C	ON CENTRE
C.P.	COMPLETE PENETRATION	O.F.	OUTSIDE FACE
CTRS.	CENTRES	OPP.	OPPOSITE
C/W	COMPLETE WITH	O.W.S.J.	OPEN WEB STEEL JOIST
DET.	DETAIL	P.P.	PARTIAL PENETRATION
D.L.	DEAD LOAD	P/T	POST–TENSIONING
D.O.	DO OVER – (DITTO)	R.D.	ROOF DRAIN
DP.	DEEP (I.E. DEPTH OF BEAM)	R.O.	ROUGH OPENING
D.T.S.	DEPTH TO SUIT	RTN.	RETURN
DWG.	DRAWING	R/W	REINFORCED WITH
DWLS.	DOWELS	S.D.L.	SUPERIMPOSED DEAD LOAD
EA.	EACH	SIM.	SIMILAR
E.E.	EACH END	S.L.	SNOW LOAD
E.F.	EACH FACE	S.L.B.B.	SHORT LEGS BACK TO BACK
EL.	ELEVATION	SLS	SERVICEABILITY LIMIT STATE
ELEV.	ELEVATION	S.O.G.	SLAB ON GRADE
ELEC.	ELECTRICAL	SPEC.	SPECIFICATIONS
EQ.	EQUAL	SST	STAINLESS STEEL
E.S.	EACH SIDE	STAG.	STAGGER
E.WAY	EACH WAY	STIR.	STIRRUP
E.W.	EACH WAY	STL.	STEEL
EXIST.	EXISTING	S.W.	SHORT WAY
EXT.	EXTERIOR	SYM.	SYMMETRICAL
F.D.	FLOOR DRAIN	T & B	TOP AND BOTTOM
F.F.	FAR FACE	T & C	TENSION AND COMPRESSION
F.S.	FAR SIDE	T & G	TONGUE AND GROOVE
FTG.	FOOTING	THK.	THICK
GA.	GAUGE	THRU	THROUGH
GALV.	GALVANIZED	T.J.	TIE JOIST
G.L.	GRID LINE	T.L.L.	TOP LOWER LAYER
GR. BM.	GRADE BEAM	T.O.	TOP OF
H.1.E.	HOOK ONE END	T.O.C.	TOP OF CONCRETE
H.2.E.	HOOK TWO ENDS	T.O.F.	TOP OF FOOTING
H & V	HORIZONTAL AND VERTICAL	T.O.S.	TOP OF SLAB/STEEL
HORL.	HORIZONTAL	T.O.W.	TOP OF WALL
HORZ.	HORIZONTAL	TR.	TRANSFER
HORIZ.	HORIZONTAL	T.U.L.	TOP UPPER LAYER
HT.	HEIGHT	TYP.	TYPICAL
I.F.	INSIDE FACE	ULS	ULTIMATE LIMIT STATE
INT.	INTERIOR	U.N.O.	UNLESS NOTED OTHERWISE
JT.	JOINT	U/S	UNDERSIDE
LG.	LONG	VERT.	VERTICAL
L.L.	LIVE LOAD	W.P.	WORK POINT
L.L.B.B.	LONG LEGS BACK TO BACK	WT.	WEIGHT

11. DEFINITIONS:

   A. SPECIALTY STRUCTURAL ENGINEER: A STRUCTURAL ENGINEER REGISTERED AND LICENSED TO PRACTICE BY THE PROFESSIONAL ENGINEERING ASSOCIATION HAVING JURISDICTION IN THE AREA WHERE THE STRUCTURE IS TO BE BUILT AND WHO IS RESPONSIBLE FOR THE DESIGN AND FIELD REVIEW OF:

      – STRUCTURAL ELEMENTS DESIGNED BY THE CONTRACTOR OR SUBCONTRACTORS, SUCH AS OPEN WEB STEEL JOISTS, PRECAST DOUBLE TEES, PRECAST PLANKS, STRUCTURAL STEEL CONNECTIONS, LIGHT WOOD FRAME ROOF TRUSSES, ETC.

      – SECONDARY STRUCTURAL ELEMENTS AND NON–STRUCTURAL ELEMENTS. SEE ALSO "NON–STRUCTURAL ELEMENTS" GENERAL NOTES.

   C. CONTINUOUS: FULL TENSION SPLICE AND TENSION DEVELOPMENT LENGTH.

   D. EMBEDMENT: UNLESS NOTED OTHERWISE COMPRESSION EMBEDMENT MEANS A COMPRESSION DEVELOPMENT LENGTH AND TENSION EMBEDMENT MEANS A TENSION DEVELOPMENT LENGTH AS PER CAN/CSA–A23.3 AND AS SHOWN ON THESE GENERAL NOTES DRAWINGS.

   E. GENERAL CONTRACTOR: FOR THE PURPOSES OF THESE DRAWINGS, THE USE OF THE TERM "CONTRACTOR" OR "GENERAL CONTRACTOR" SHALL REFER TO THE PRIME PERSON OR COMPANY RESPONSIBLE FOR CONSTRUCTION OF THE PROJECT AND THE COORDINATION OF TRADES AND SUBCONTRACTORS. THIS MAY BE THE GENERAL CONTRACTOR, OR A CONSTRUCTION MANAGER.

Public Works and Government Services Canada / Travaux publics et Services gouvernementaux Canada

REAL PROPERTY SERVICES
Pacific Region
SERVICES IMMOBILIERS
Région de Pacifique

PROVINCE OF BRITISH COLUMBIA
J.T.A. CORBETT
PROFESSIONAL ENGINEER
15400
GENERAL STRUCTURAL ENGINEER
17/7/5

Revision/ Révision	Description/Description	Date/Date
5		
4		
3		
2	ISSUED FOR TENDER	2017.07.13
1	ISSUED FOR 100% CD	2017.05.09
0	PRE–TENDER CD FOR CLIENT REVIEW	2017.04.05

Client/client

CANADIAN FOOD INSPECTION AGENCY

Project title/Titre du projet
3155 WILLINGDON GREEN
BURNABY, BC

CFIA
AHU REPLACEMENT

Consultant Signature Only

Designed by/Concept par
JC

Drawn by/Dessine par
JM/FC

PWGSC Project Manager/Administrateur de Projets TPSGC

Regional Manager, Architectural and Engineering Services
Gestionnaire régionale, Services d'architectural et de génie, TPSGC

Drawing title/Titre du dessin
GENERAL NOTES AND TYPICAL DETAILS

Project No./No. du projet	Sheet/ Feuille	Revision no./ La Révision no.
39903-150591	S101 OF .	2

PWGSC – A1 – 841X594

0 10 20 30 40 50 60 70 80 90 100mm

VAN.038076.0006

DM5XXXXXX

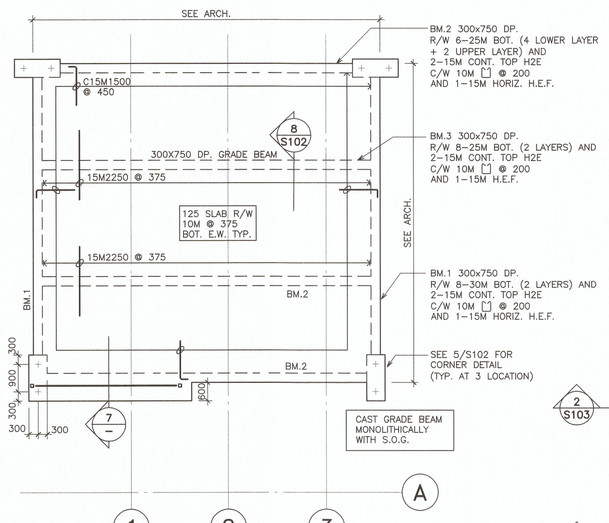

BAR PLACING ORDER

UPPER LAYER BOTTOM BARS (B.U.L.)

LOWER LAYER BOTTOM BARS (B.L.L.)

4 S102 AHU 101 & 102 CONCRETE SUPPORT PAD
1 : 100

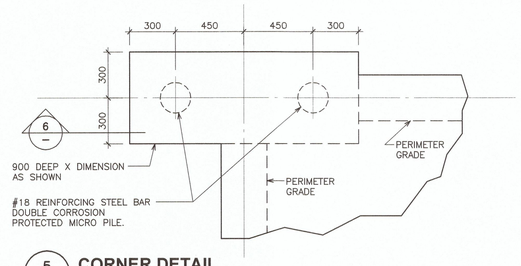

5 S102 CORNER DETAIL
1 : 20

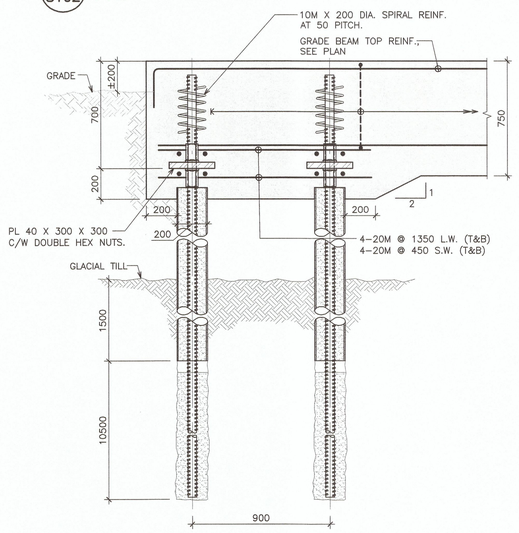

6 S102 SECTION
1 : 20

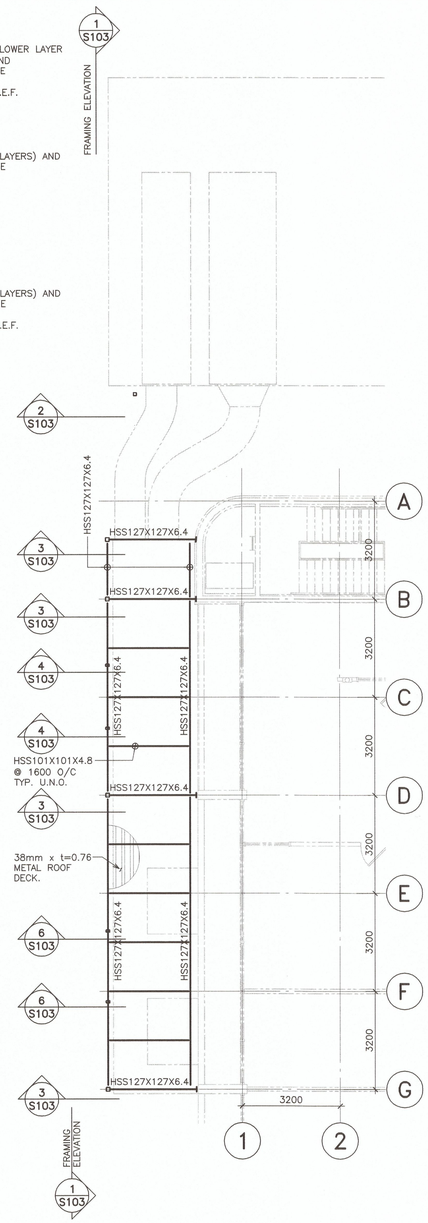

3 S102 DUCT ENCLOSURE ROOF FRAMING PLAN
1 : 100

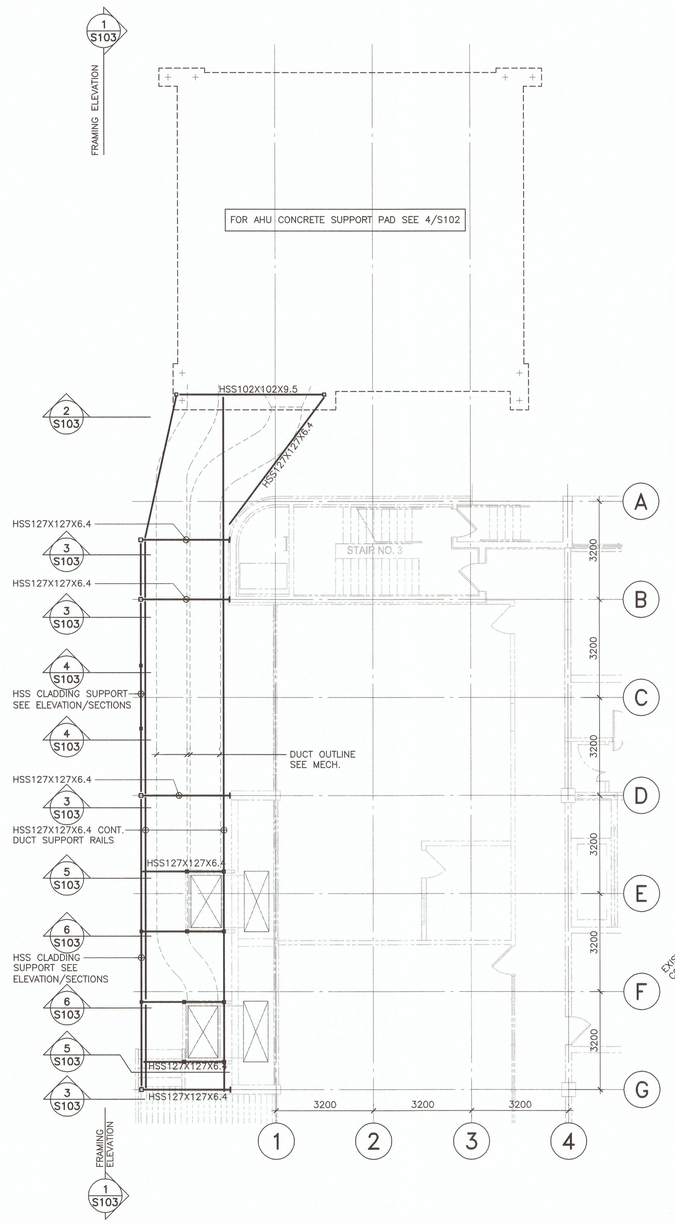

2 S102 DUCT ENCLOSURE FAMING PLAN
1 : 100

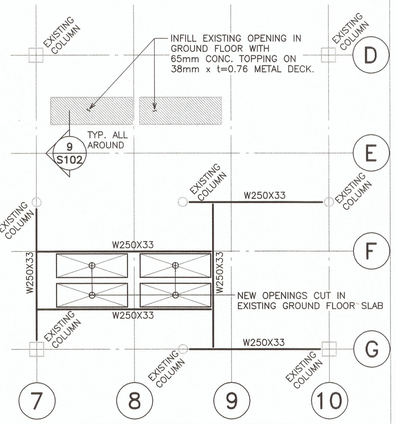

NOTE: ALL W250 BEAMS TO BE UNDERSIDE OF EXISTING GROUND FLOOR SLAB

1 S102 EXISTING LEVEL 1 PARTIAL PLAN
1 : 100

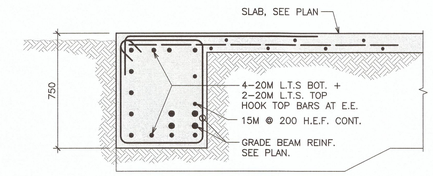

7 S102 SECTION
1 : 20

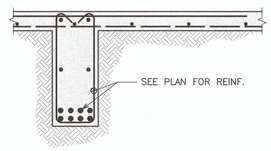

8 S102 GRADE BEAM DETAIL
1 : 20

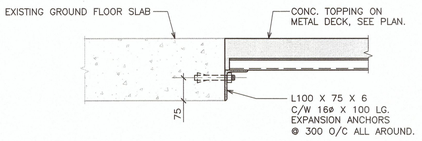

9 S102 SECTION
1:10

NOTES

1. COORDINATE ALL DIMENSIONS WITH ARCH. AND MECH.
2. ALL EXPOSED STEEL AND CONNECTIONS TO BE HOT-DIPPED GALVANIZED.
3. SITE MEASURE PRIOR TO FABRICATION.
4. GENERAL CONTRACTOR TO SCAN THE AREAS AT TIE IN LOCATIONS. CONTACT RJC IF PROPOSED WORK CONFLICTS WITH EXISTING REINFORCEMENT.

NORTH

Public Works and Government Services Canada / Travaux publics et Services gouvernementaux Canada

REAL PROPERTY SERVICES
Pacific Region
SERVICES IMMOBILIERS
Région de Pacifique

PROVINCE OF BRITISH COLUMBIA
J. T. A. CORBETT
PROFESSIONAL ENGINEER
39903
REGISTERED STRUCTURAL ENGINEER
17/07/31

Revision/ Revision	Description/Description	Date/Date
5		
4		
3		
2	ISSUED FOR TENDER	2017.07.13
1	ISSUED FOR 100% CD	2017.05.09
0	PRE-TENDER CD FOR CLIENT REVIEW	2017.04.05

Client/client

CANADIAN FOOD INSPECTION AGENCY

Project title/Titre du projet

3155 WILLINGDON GREEN BURNABY, BC

CFIA AHU REPLACEMENT

Consultant Signature Only

Designed by/Concept par
JC

Drawn by/Dessine par
JM/FC

PWGSC Project Manager/Administrateur de Projets TPSGC

Regional Manager, Architectural and Engineering Services
Gestionnaire régionale, Services d'architectural et de génie, TPSGC

Drawing title/Titre du dessin

AHU 101 & 102 FRAMING PLANS, CONCRETE PAD PLAN AND DETAILS

Project No./No. du projet	Sheet/Feuille	Revision no./ La Révision no.
39903-150591	S102 OF ·	2

PWGSC – A1 – 841X594

0 10 20 30 40 50 60 70 80 90 100mm

VAN.038076.0006

DM5XXXXXX

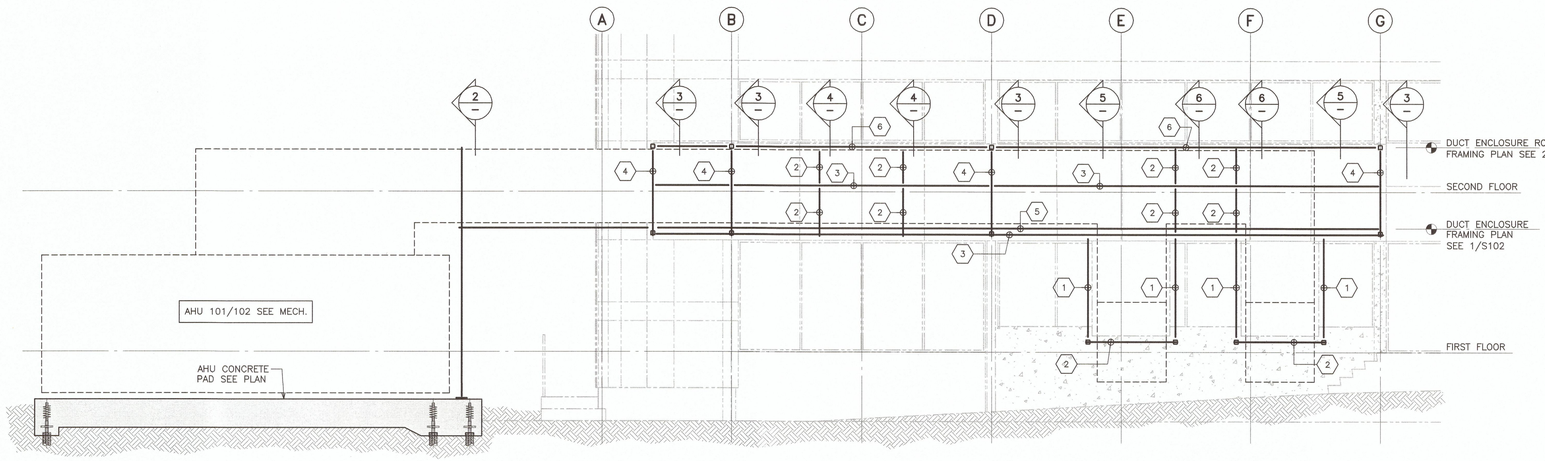

KEYED NOTES

1. HSS101X101X4.78
2. HSS89X89X4.78
3. HSS127X76X9.5 L.S.H.
4. HSS127X127X6.4
5. HSS RAILS, SEE DUCT ENCLOSURE FRAMING PLAN
6. HSS, SEE DUCT ENCLOSURE ROOF FRAMING PLAN

1/S103 DUCT FRAMING ELEVATION
1 : 75

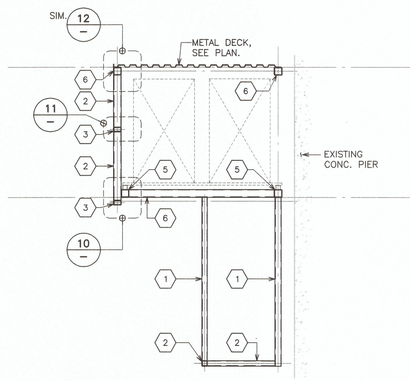

6/S103 SECTION
1 : 50

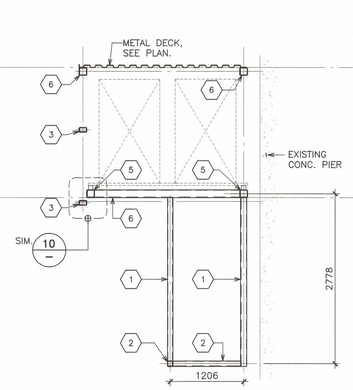

5/S103 SECTION
1 : 50

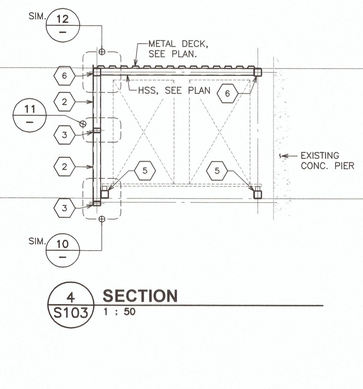

4/S103 SECTION
1 : 50

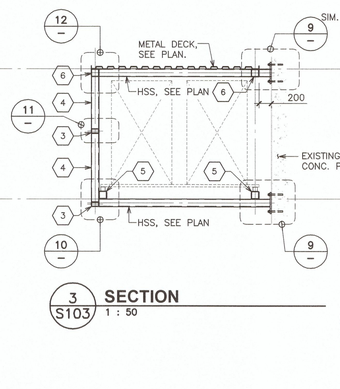

3/S103 SECTION
1 : 50

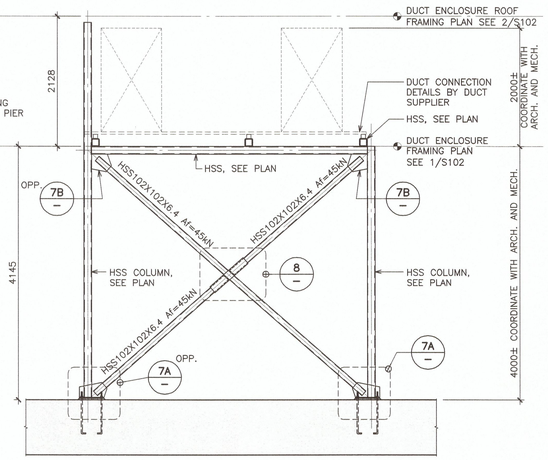

2/S103 BRACE ELEVATION
1 : 50

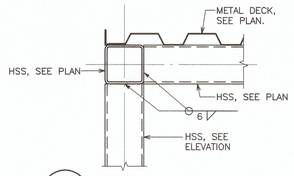

12/S103 DETAIL
1 : 10

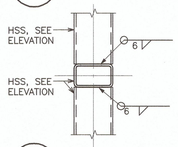

11/S103 DETAIL
1 : 10

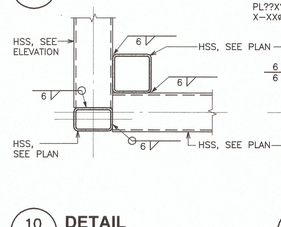

10/S103 DETAIL
1 : 10

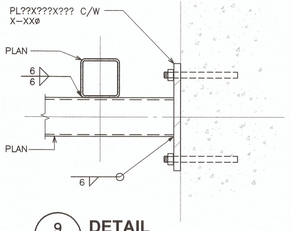

9/S103 DETAIL
1 : 10

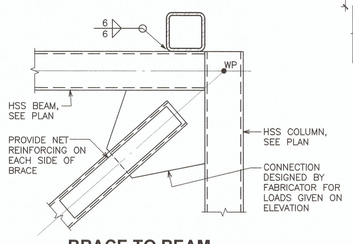

7B/S103 BRACE TO BEAM CONNECTION DETAIL
1 : 10

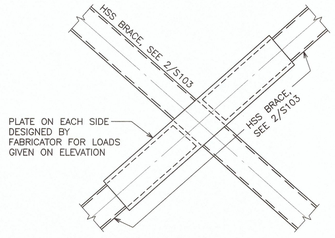

8/S103 BRACE TO BRACE CONNECTION DETAIL
1 : 10

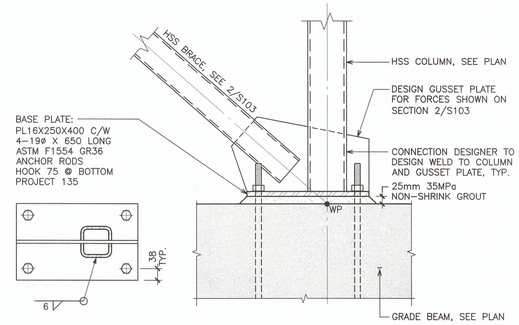

7A/S103 HSS BRACE CONNECTION DETAIL
1 : 10

Public Works and Government Services Canada
Travaux publics et Services gouvernementaux Canada

REAL PROPERTY SERVICES
Pacific Region
SERVICES IMMOBILIERS
Région de Pacifique

PROVINCE OF BRITISH COLUMBIA
J. T. A. CORBETT
PROFESSIONAL ENGINEER
19033
STRUCTURAL ENGINEER
2017/7/31

Revision/ Revision	Description/Description	Date/Date
5		
4		
3		
2	ISSUED FOR TENDER	2017.07.13
1	ISSUED FOR 100% CD	2017.05.09
0	PRE-TENDER CD FOR CLIENT REVIEW	2017.04.05

Client/client

CANADIAN FOOD INSPECTION AGENCY

Project title/Titre du projet

3155 WILLINGDON GREEN BURNABY, BC

CFIA AHU REPLACEMENT

Consultant Signature Only

Designed by/Concept par
JC

Drawn by/Dessine par
JM/FC

PWGSC Project Manager/Administrateur de Projets TPSGC

Regional Manager, Architectural and Engineering Services Gestionnaire régionale, Services d'architectural et de génie, TPSGC

Drawing title/Titre du dessin

AHU 101&102 FRAMING ELEVATION, SECTIONS AND DETAILS

Project No./No. du projet	Sheet/ Feuille	Revision no./ La Révision no.
39903-150591	S103 OF ·	2

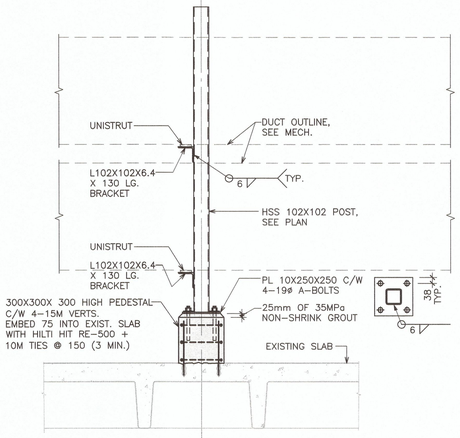

3/S104 **SECTION**
1 : 20

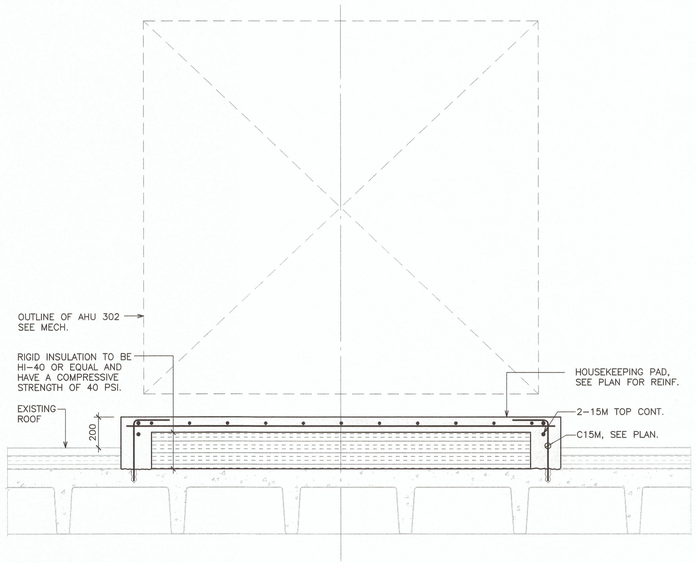

4/S104 **HOUSEKEEPING PAD FOR AHU 302**
1 : 20

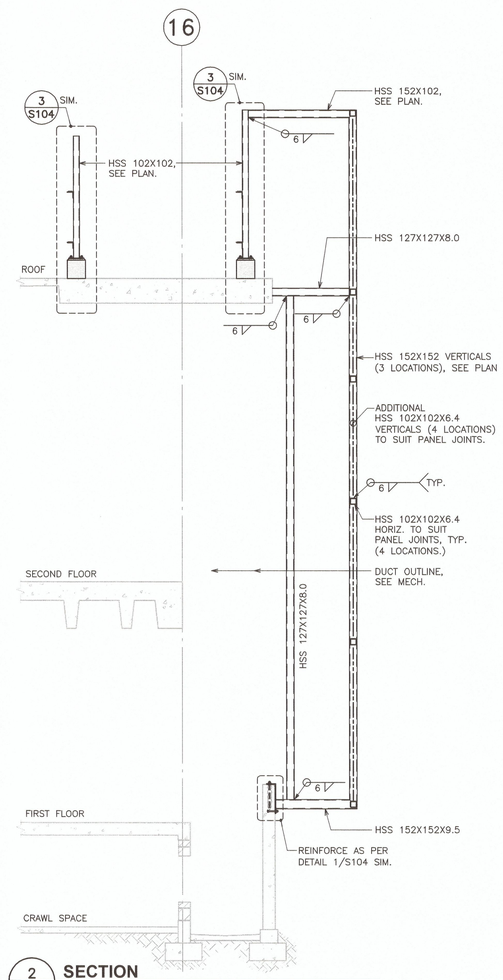

2/S104 **SECTION**
1 : 50

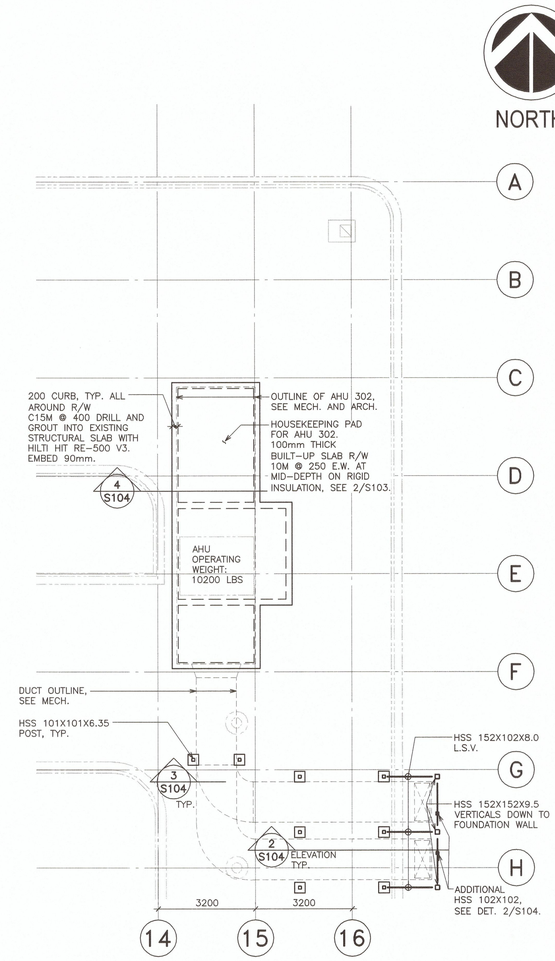

1/S104 **PARTIAL ROOF PLAN AHU 302**
1 : 100

NOTES

1. COORDINATE ALL DIMENSIONS WITH ARCH. AND MECH.
2. ALL EXPOSED STEEL AND CONNECTIONS TO BE HOT–DIPPED GALVANIZED.
3. SITE MEASURE PRIOR TO FABRICATION.
4. GENERAL CONTRACTOR TO SCAN THE AREAS AT TIE IN LOCATIONS. CONTACT RJC IF PROPOSED WORK CONFLICTS WITH EXISTING REINFORCEMENT.

Public Works and Government Services Canada / Travaux publics et Services gouvernementaux Canada

REAL PROPERTY SERVICES
Pacific Region
SERVICES IMMOBILIERS
Région de Pacifique

PROVINCE OF BRITISH COLUMBIA
J. T. A. CORBETT
PROFESSIONAL ENGINEER
15465
STRUCTURAL ENGINEER
17/07/13

Revision/ Revision	Description/Description	Date/Date
5		
4		
3		
2	ISSUED FOR TENDER	2017.07.13
1	ISSUED FOR 100% CD	2017.05.09
0	PRE–TENDER CD FOR CLIENT REVIEW	2017.04.05

Client/client

CANADIAN FOOD INSPECTION AGENCY

Project title/Titre du projet

3155 WILLINGDON GREEN BURNABY, BC

CFIA AHU REPLACEMENT

Consultant Signature Only

Designed by/Concept par
JC

Drawn by/Dessine par
JM/FC

PWGSC Project Manager/Administrateur de Projets TPSGC

Regional Manager, Architectural and Engineering Services Gestionnaire régionale, Services d'architectural et de génie, TPSGC

Drawing title/Titre du dessin

AHU 302 ROOF FRAMING PLAN AND DETAILS

Project No./No. du projet	Sheet/ Feuille	Revision no./ La Révision no.
39903-150591	S104 OF ·	2

DESIGN CODE

1. THE STRUCTURAL WORK SHOWN ON THE STRUCTURAL DRAWINGS HAS BEEN DESIGNED IN SUBSTANTIAL ACCORDANCE WITH THE BRITISH COLUMBIA BUILDING CODE 2012 WHICH IS BASED ON THE NATIONAL BUILDING CODE OF CANADA 2010.

FIELD REVIEW

1. FIELD REVIEW IS PROVIDED FOR THE WORK SHOWN ON THESE STRUCTURAL DRAWINGS. THIS REVIEW IS NOT A "FULL TIME" REVIEW BUT IS CONDUCTED WITH SUCH FREQUENCY AS IS DEEMED APPROPRIATE TO OBSERVE VARIOUS STAGES OF THE WORK AND TO ASCERTAIN THAT THE WORK IS IN GENERAL CONFORMANCE WITH THE PLANS AND SUPPORTING DOCUMENTS. FIELD REVIEW IS NOT CARRIED OUT FOR THE CONTRACTOR'S BENEFIT. IT REMAINS THE CONTRACTOR'S RESPONSIBILITY TO BUILD THE WORK IN CONFORMANCE WITH THE CONTRACT DOCUMENTS.

   WE WILL REVIEW SHOP DRAWINGS PERTAINING TO WORK SHOWN ON THESE DRAWINGS. THE EXTENT OF THIS REVIEW IS AT OUR SOLE DISCRETION AND IS FOR THE SOLE PURPOSE OF ASCERTAINING GENERAL CONFORMANCE WITH THE STRUCTURAL DESIGN CONCEPT. THE REVIEW IS NOT AN APPROVAL OF THE DESIGN, DETAILS, AND DIMENSIONS INHERENT IN THE SHOP DRAWINGS, RESPONSIBILITY FOR WHICH SHALL REMAIN WITH THE CONTRACTOR OR SUBCONTRACTOR SUBMITTING THEM. SUCH REVIEW SHALL NOT RELIEVE THE CONTRACTOR OR SUBCONTRACTOR OF HIS OR HER RESPONSIBILITY FOR ERRORS AND OMISSIONS IN THE SHOP DRAWINGS OR FOR MEETING ALL REQUIREMENTS OF THE CONTRACT DOCUMENTS.

2. PROVIDE 24 HOURS ADVANCE NOTICE OF EACH REQUIRED FIELD REVIEW. FIELD REVIEWS SHALL BE SCHEDULED TO BE CARRIED OUT DURING NORMAL BUSINESS HOURS UNLESS SPECIAL ARRANGEMENTS ARE MADE.

3. THE WORK TO BE REVIEWED SHALL BE GENERALLY COMPLETE.

CONCRETE

1. CONCRETE PROPERTIES:

GENERAL (AREAS NOT INCLUDING PARKING)			
ELEMENT	COMPRESSIVE STRENGTH (MPa) 28 DAYS U.N.O.	EXPOSURE CLASS	COMMENTS
SLAB ON GRADE (INTERIOR)	20 MPa	N	.
ALL CONCRETE	25 MPa	F-2	.

LIST OF STRUCTURAL DRAWINGS

S201 – GENERAL NOTES AND TYPICAL DETAILS

S202 – EMR PLANS AND DETAILS

DRAWINGS

1. THIS SET OF DRAWINGS SHOWS THE COMPLETED PROJECT. THE DRAWINGS DO NOT SHOW COMPONENTS THAT MAY BE NECESSARY FOR CONSTRUCTION SAFETY. THE GENERAL CONTRACTOR IS RESPONSIBLE FOR SAFETY IN AND ABOUT THE JOB SITE DURING CONSTRUCTION, AND THE DESIGN AND ERECTION OF ALL TEMPORARY STRUCTURES, FORMWORK, FALSE WORK, SHORING, ETC. REQUIRED TO COMPLETE THE WORK.

2. THE USE OF THESE DRAWINGS IS LIMITED TO THAT IDENTIFIED IN THE REVISIONS COLUMN. DO NOT CONSTRUCT FROM THESE DRAWINGS UNLESS MARKED "ISSUED FOR CONSTRUCTION" IN THE REVISIONS COLUMN, BY READ JONES CHRISTOFFERSEN LTD. THE DRAWINGS SHALL NOT BE USED FOR PRICING, COSTING, OR TENDER UNLESS SO INDICATED IN THE REVISION COLUMN. PRICING OR COSTING DRAWINGS ARE NOT COMPLETE AND ANY PRICES BASED ON PRICING OR COSTING DRAWINGS MUST INCLUDE ALLOWANCES FOR THIS.

3. THE INFORMATION ON THESE DRAWINGS SHALL NOT BE USED FOR ANY OTHER PROJECT OR WORKS. THE INFORMATION ON THESE DRAWINGS APPLIES SOLELY TO THIS PROJECT.

GENERAL

1. SECTION MARK SHOWN THUS

MEANS SECTION #4 ON DRAWING S202.

2. SEE ARCHITECTURAL, MECHANICAL AND ELECTRICAL DRAWINGS FOR SLEEVES, NAILERS, INSERTS, ETC., TO BE ENCASED IN CONCRETE.

3. SEE ARCHITECTURAL DRAWINGS FOR FLOOR AND ROOF ELEVATIONS, RECESSES, DRAINAGE SLOPES, ETC.

4. THE GENERAL CONTRACTOR SHALL REVIEW ALL THE DRAWINGS AND CHECK DIMENSIONS BEFORE CONSTRUCTION. REPORT DISCREPANCIES BETWEEN STRUCTURAL AND OTHER DISCIPLINES DRAWINGS FOR CLARIFICATION.

5. CONCRETE WORK
   SHALL CONFORM TO CSA A23.1, CSA A23.2, CSA A23.3 AND REFERENCED DOCUMENTS.

6. STRUCTURAL STEEL WORK
   SHALL CONFORM TO CSA S16 AND REFERENCED DOCUMENTS.

7. FIRE RESISTANCE RATINGS
   SEE ARCHITECTURAL DRAWINGS AND SPECIFICATIONS FOR PRECISE LOCATION OF REQUIRED FIRE RESISTANCE RATINGS.

8. DO NOT CUT OR DRILL ANY OPENINGS IN STRUCTURAL MEMBERS WITHOUT WRITTEN PERMISSION.

9. REFER TO ARCHITECTURAL, MECHANICAL, ELECTRICAL, AND LANDSCAPE DRAWINGS FOR LOCATIONS, CONFIGURATIONS, EXTENT, AND SIZES OF ALL CURBS, UPSTANDS, DOWNTURNS; AND FOR OPENINGS THROUGH FLOORS AND WALLS FOR DUCTS, CONDUIT AND PIPING. PROVIDE FOR SAME.

10. ABBREVIATIONS:

A.B.	ANCHOR BOLT	L.L.H.	LONG LEG HORIZONTAL
ALT.	ALTERNATE	L.L.V.	LONG LEG VERTICAL
ARCH.	ARCHITECTURAL	LS.H.	LONG SIDE HORIZONTAL
B.C.E.	BOTTOM CHORD EXTENSION	L.S.V.	LONG SIDE VERTICAL
B.L.L.	BOTTOM LOWER LAYER	L.T.S.	LENGTH TO SUIT
BM.	BEAM	L.V.	LENGTH VARIES
BOT.	BOTTOM	L.W.	LONG WAY
B.U.L.	BOTTOM UPPER LAYER	MAX.	MAXIMUM
B.W.	BOTH WAYS	MECH.	MECHANICAL
CANTIL.	CANTILEVER	MIN.	MINIMUM
C.I.P.	CAST IN PLACE	N.F.	NEAR FACE
C.J.	CONTROL JOINT	N.I.C.	NOT IN CONTRACT
CL.	CENTER LINE	N.S.	NEAR SIDE
CLR.	CLEAR	N.T.S.	NOT TO SCALE
CONC.	CONCRETE	O.C.	ON CENTRE
CONT.	CONTINUOUS	O/C	ON CENTRE
C.P.	COMPLETE PENETRATION	O.F.	OUTSIDE FACE
CTRS.	CENTRES	OPP.	OPPOSITE
C/W	COMPLETE WITH	O.W.S.J.	OPEN WEB STEEL JOIST
DET.	DETAIL	P.P.	PARTIAL PENETRATION
D.L.	DEAD LOAD	P/T	POST-TENSIONING
D.O.	DO OVER - (DITTO)	R.D.	ROOF DRAIN
DP.	DEEP (I.E. DEPTH OF BEAM)	R.O.	ROUGH OPENING
D.T.S.	DEPTH TO SUIT	RTN.	RETURN
DWG.	DRAWING	R/W	REINFORCED WITH
DWLS.	DOWELS	S.D.L.	SUPERIMPOSED DEAD LOAD
EA.	EACH	SIM.	SIMILAR
E.E.	EACH END	S.L.	SNOW LOAD
E.F.	EACH FACE	S.L.B.B.	SHORT LEGS BACK TO BACK
EL.	ELEVATION	SLS	SERVICEABILITY LIMIT STATE
ELEV.	ELEVATION	S.O.G.	SLAB ON GRADE
ELEC.	ELECTRICAL	SPEC.	SPECIFICATIONS
EQ.	EQUAL	SST	STAINLESS STEEL
E.S.	EACH SIDE	STAG.	STAGGER
E.WAY	EACH WAY	STIR.	STIRRUP
E.W.	EACH WAY	STL.	STEEL
EXIST.	EXISTING	S.W.	SHORT WAY
EXT.	EXTERIOR	SYM.	SYMMETRICAL
F.D.	FLOOR DRAIN	T & B	TOP AND BOTTOM
F.F.	FAR FACE	T & C	TENSION AND COMPRESSION
F.S.	FAR SIDE	T & G	TONGUE AND GROOVE
FTG.	FOOTING	THK.	THICK
GA.	GAUGE	THRU	THROUGH
GALV.	GALVANIZED	T.J.	TIE JOIST
G.L.	GRID LINE	T.L.L.	TOP LOWER LAYER
GR. BM.	GRADE BEAM	T.O.	TOP OF
H.1.E.	HOOK ONE END	T.O.C.	TOP OF CONCRETE
H.2.E.	HOOK TWO ENDS	T.O.F.	TOP OF FOOTING
H & V	HORIZONTAL AND VERTICAL	T.O.S.	TOP OF SLAB/STEEL
HORL.	HORIZONTAL	T.O.W.	TOP OF WALL
HORZ.	HORIZONTAL	TR.	TRANSFER
HORIZ.	HORIZONTAL	T.U.L.	TOP UPPER LAYER
HT.	HEIGHT	TYP.	TYPICAL
I.F.	INSIDE FACE	ULS	ULTIMATE LIMIT STATE
INT.	INTERIOR	U.N.O.	UNLESS NOTED OTHERWISE
JT.	JOINT	U/S	UNDERSIDE
LG.	LONG	VERT.	VERTICAL
L.L.	LIVE LOAD	W.P.	WORK POINT
L.L.B.B.	LONG LEGS BACK TO BACK	WT.	WEIGHT

11. DEFINITIONS:

A. SPECIALTY STRUCTURAL ENGINEER: A STRUCTURAL ENGINEER REGISTERED AND LICENSED TO PRACTICE BY THE PROFESSIONAL ENGINEERING ASSOCIATION HAVING JURISDICTION IN THE AREA WHERE THE STRUCTURE IS TO BE BUILT AND WHO IS RESPONSIBLE FOR THE DESIGN AND FIELD REVIEW OF:

   – STRUCTURAL ELEMENTS DESIGNED BY THE CONTRACTOR OR SUBCONTRACTORS, SUCH AS OPEN WEB STEEL JOISTS, PRECAST DOUBLE TEES, PRECAST PLANKS, STRUCTURAL STEEL CONNECTIONS, LIGHT WOOD FRAME ROOF TRUSSES, ETC.

   – SECONDARY STRUCTURAL ELEMENTS AND NON-STRUCTURAL ELEMENTS. SEE ALSO "NON-STRUCTURAL ELEMENTS" GENERAL NOTES.

C. CONTINUOUS: FULL TENSION SPLICE AND TENSION DEVELOPMENT LENGTH.

D. EMBEDMENT: UNLESS NOTED OTHERWISE COMPRESSION EMBEDMENT MEANS A COMPRESSION DEVELOPMENT LENGTH AND TENSION EMBEDMENT MEANS A TENSION DEVELOPMENT LENGTH AS PER CAN/CSA-A23.3 AND AS SHOWN ON THESE GENERAL NOTES DRAWINGS.

E. GENERAL CONTRACTOR: FOR THE PURPOSES OF THESE DRAWINGS, THE USE OF THE TERM "CONTRACTOR" OR "GENERAL CONTRACTOR" SHALL REFER TO THE PRIME PERSON OR COMPANY RESPONSIBLE FOR CONSTRUCTION OF THE PROJECT AND THE COORDINATION OF TRADES AND SUBCONTRACTORS. THIS MAY BE THE GENERAL CONTRACTOR, OR A CONSTRUCTION MANAGER.

Public Works and Government Services Canada / Travaux publics et Services gouvernementaux Canada

REAL PROPERTY SERVICES
Pacific Region
SERVICES IMMOBILIERS
Région de Pacifique

PROVINCE OF BRITISH COLUMBIA
J. T. A. CORSETTI
PROFESSIONAL ENGINEER
STRUCTURAL ENGINEER
17/7/13

Revision/ Revision	Description/Description	Date/Date
5		
4		
3		
2	ISSUED FOR TENDER	2017.07.13
1	ISSUED FOR 100% CD	2017.05.09
0	PRE-TENDER CD FOR CLIENT REVIEW	2017.04.05

Client/client

CANADIAN FOOD INSPECTION AGENCY

Project title/Titre du projet

3155 WILLINGDON GREEN
BURNABY, BC

CFIA
EXHAUST MANIFOLD REPLACEMENT

Consultant Signature Only

Designed by/Concept par
JC

Drawn by/Dessine par
FC

PWGSC Project Manager/Administrateur de Projets TPSGC

Regional Manager, Architectural and Engineering Services
Gestionnaire régionale, Services d'architectural et de génie, TPSGC

Drawing title/Titre du dessin

GENERAL NOTES AND TYPICAL DETAILS

Project No./No. du projet	Sheet/Feuille	Revision no./ La Révision no.
39903-150591	S201 OF ·	2

VAN.038076.0006

DM5XXXXXX

PWGSC – A1 – 841X594

0 10 20 30 40 50 60 70 80 90 100mm

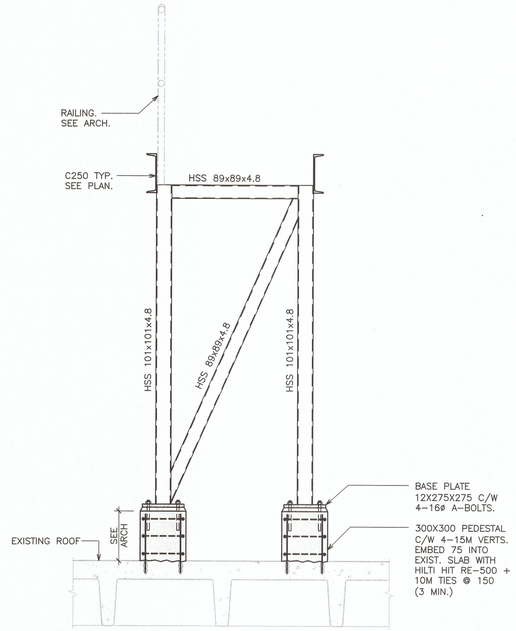

3/202 **SECTION**
1 : 20

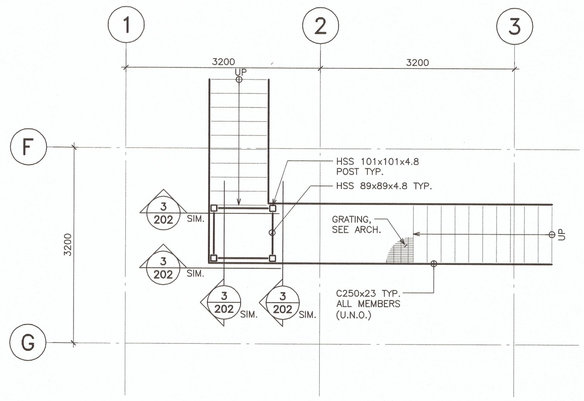

2/202 **WEST CROSS OVER STAIRS PLAN**
1 : 50

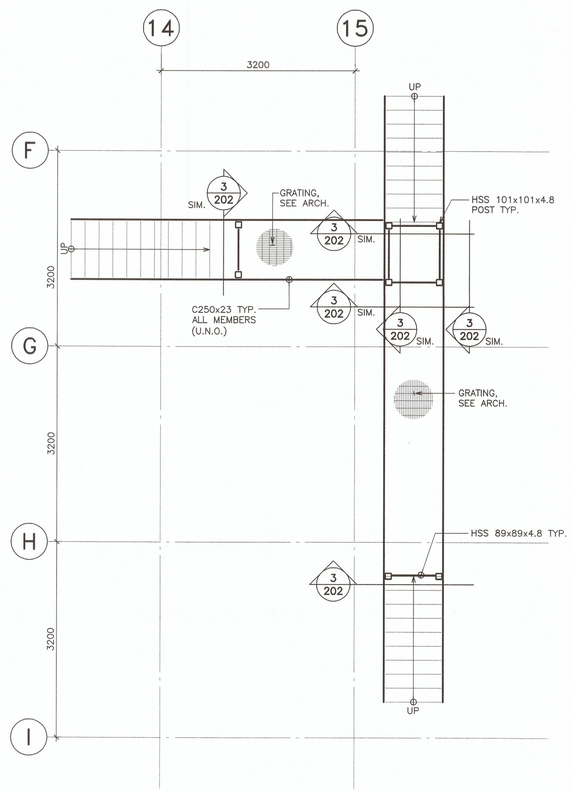

1/202 **EAST CROSS OVER STAIRS PLAN**
1 : 50

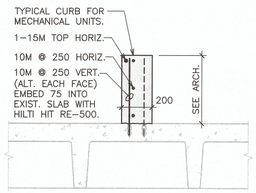

6/202 **EXHAUST MANIFOLD TYPICAL CURB DETAIL**
1 : 20

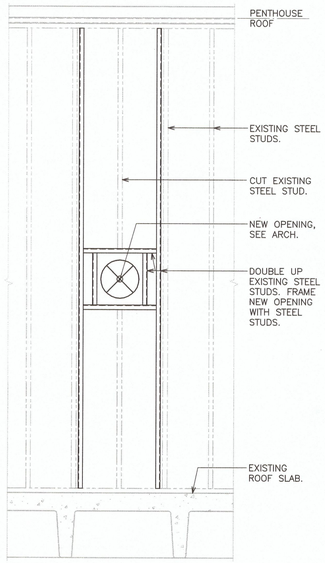

5/202 **PENTHOUSE WALL ELEVATION**
1 : 20

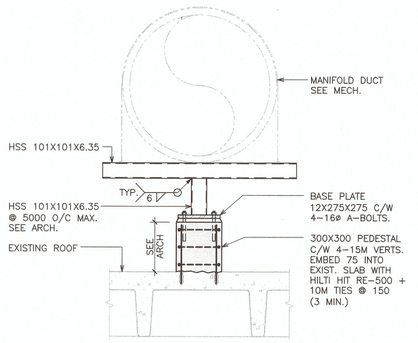

4/202 **TYPICAL MANIFOLD DUCT SUPPORT**
1 : 20

Public Works and Government Services Canada
Travaux publics et Services gouvernementaux Canada

REAL PROPERTY SERVICES
Pacific Region
SERVICES IMMOBILIERS
Région de Pacifique

PROVINCE OF BRITISH COLUMBIA
J. T. A. CORBETT
PROFESSIONAL ENGINEER
15465
STRUCTURAL ENGINEER
17/07/31

Revision/ Revision	Description/Description	Date/Date
5		
4		
0		
2	ISSUED FOR TENDER	2017.07.13
1	ISSUED FOR 100% CD	2017.05.09
0	PRE-TENDER CD FOR CLIENT REVIEW	2017.04.05

Client/client

CANADIAN FOOD INSPECTION AGENCY

Project title/Titre du projet

3155 WILLINGDON GREEN
BURNABY, BC

CFIA
EXHAUST MANIFOLD
REPLACEMENT

Consultant Signature Only

Designed by/Concept par
JC

Drawn by/Dessine par
FC

PWGSC Project Manager/Administrateur de Projets TPSGC

Regional Manager, Architectural and Engineering Services
Gestionnaire régionale, Services d'architectural et de génie, TPSGC

Drawing title/Titre du dessin

EMR PLANS AND DETAILS

Project No./No. du projet	Sheet/Feuille	Revision no./ La Révision no.
39903-150591	S202 OF ·	2

CANADIAN FOOD INSPECTION AGENCY

AIR HANDLING UNITS (AHUs) REPLACEMENT

GENERAL NOTES

1	ALL NEW WORK WILL NEED TO BE INSTALLED IN PARALLEL WITH EXISTING SYSTEM (WHEN FEASIBLE) TO MINIMIZE DURATION OF SHUT-DOWNS. SHUT-DOWNS OF ANY AREAS WILL NEED TO BE COORDINATED AND APPROVED AHEAD OF TIME, IN COORDINATION WITH DEPARTMENTAL REPRESENTATIVE.
2.	ALL NEW WORK SHALL BE TESTED, BALANCED (AS NECESSARY) AND COMMISSIONED.
3.	CONTRACTOR IS RESPONSIBLE FOR REVIEWING AND VERIFYING ACTUAL ONSITE CONDITIONS AND EQUIPMENT LOCATIONS PRIOR TO ANY AND ALL DEMOLITION WORK AND/OR EQUIPMENT REMOVAL.
4.	THE MECHANICAL SYSTEM SHALL CONSIST OF ALL WORK SHOWN ON THE DRAWINGS, DIAGRAMS, SCHEMATICS AND AS DESCRIBED IN THE SPECIFICATIONS.
5.	THE MECHANICAL PLANS ARE DIAGRAMMATIC IN NATURE AND DO NOT ATTEMPT TO SHOW ALL REQUIRED OFFSETS. CONTRACTOR TO ALLOW FOR OFFSETS AS PART OF CONTRACT PRICE. EXISTING CONDITIONS AND PIPES ROUTINGS TO BE REVIEWED WITH TENDER.
6.	COORDINATE THE DRAWINGS WITH THE SPECIFICATIONS AND IN CASES WHERE CONFLICTS OCCUR, THE MOST STRINGENT REQUIREMENTS SHALL APPLY.
7.	CONTRACTOR TO COORDINATE ALL MECHANICAL WORK WITH THAT OF OTHER TRADES TO ENSURE PROPER AND ADEQUATE INTERFACE WITH THE WORK OUTLINED FOR THIS PROJECT.
8.	CONTRACTOR TO PROVIDE HORIZONTAL AND VERTICAL CLEARANCE FOR ALL INSTALLED EQUIPMENT AS DICTATED BY THE NATIONAL ELECTRICAL CODE. OFFSET MECHANICAL SYSTEMS AS REQUIRED.
9.	CONTRACTOR TO INCLUDE AS A PART OF THE BID, ALL COSTS ASSOCIATED WITH CUTTING AND PATCHING THAT IS REQUIRED TO INSTALL ALL NEW MECHANICAL SYSTEMS AS REQUIRED TO MEET THE SITE CONDITIONS AS SHOWN ON THE DRAWINGS. PATCHING SHALL MEET THE AESTHETIC CONDITIONS WHICH WAS THE CONDITION PRIOR TO ANY CUTTING BEING PERFORMED.
10.	DURING REMOVAL OF ITEMS SO INDICATED, CAUTION SHOULD BE USED TO PREVENT DAMAGE TO ANY EQUIPMENT HAVING SALVAGE VALUE. ALL REUSABLE SALVAGED MATERIAL SHALL REMAIN THE PROPERTY OF THE DEPARTMENTAL REPRESENTATIVE AND BE RETAINED FOR THEIR INSPECTION. ONLY ITEMS AGREED BY THE DEPARTMENTAL REPRESENTATIVE SHALL BE DISPOSED OF BY THE CONTRACTOR.
11.	CONTRACTOR TO PROPERLY SEAL AND REPAIR ANY AND ALL DAMAGE THAT IS A RESULT OF REMOVAL OR DEMOLITION OF MECHANICAL EQUIPMENT. THIS INCLUDES BUT IS NOT LIMITED TO WALL, DOOR, CEILINGS, ETC...
12.	INSTALLING CONTRACTOR TO PROVIDE SEISMIC PIPE/DUCT SUPPORTS WITH A STRUCTURAL ENGINEERING STAMP AS REQUIRED BY BC BUILDING CODE.
13.	CONTRACTOR TO PROVIDE FIRE STOPPING AND SEALING AROUND ANY PIPING PENETRATING FULL HEIGHT WALLS, SHAFT FLOORS, AND CEILING.
14.	INSTALL ISOLATION VALVES ON EACH MAIN, BRANCH, AND FIXTURE LINE, REGARDLESS WHETHER THEY ARE SHOWN ON DRAWINGS OR NOT.
15.	PROVIDE VALVE IDENTIFICATION TAGS AND SECURE THOSE USING NON-FERROUS CHAIN BRAIDED BAND OR PLASTIC BAND (SUITABLE FOR TEMPERATURE). TAGS MAY BE OF BRASS, ALUMINUM, METAL PHOTO, LAMICOID OR FIBERGLASS, STAMPED OR ENGRAVED. OF 25mm MINIMUM DIAMETER. VALVES TO BE TAGGED ON ALL MAIN AND BRANCH LINES.
16.	SHUT DOWNS TO MAIN AIR HANDLING SYSTEMS ARE TO BE CONFINED TO OFF HOURS. THIS INCLUDES BUT IS NOT LIMITED TO FINAL CONNECTIONS, COIL REPLACEMENTS, DOWNSIZING AND REMOVAL OF EXISTING INTERIOR UNITS. 2 WEEK LEAD TIME IS TO BE GIVEN BEFORE ANY OFF HOURS WORK AND AND MUST BE CONFIRMED ONE WEEK PRIOR TO SHUT DOWN, NO EXCEPTIONS.
17.	ALL NEW EQUIPMENT, PIPING AND CONTROLS SHALL BE INSTALLED, PRE-TESTED, AND PRE-COMISSIONNED PRIOR TO TYING INTO EXISTING SYSTEM.
18.	THE AIR HANDLING UNIT MUST BE INSTALLED, COMMISSIONED, AND FULLY OPERATIONAL PRIOR TO CONSTRUCTION OF THE EXHAUST MANIFOLD SYSTEM.
19.	DUCT LINER, IN ANY FORM, IS UNACCEPTABLE FOR THIS PROJECT. NO DUCT LINER IS TO BE USED.

GENERAL PHASING NOTES

REFER TO GENERAL NOTES 1, 2, 7, 16, AND 17 ON THIS SHEET FOR ITEMS RELATING TO COORDINATION WITH BUILDING OPERATIONS AND EXISTING EQUIPMENT.
ALL EXTERIOR EQUIPMENT, DUCTWORK, AND PIPING (PARKING LOT AND ROOFTOP) IS TO BE INSTALLED PRIOR TO COMMENCING ANYWORK IN THE MECHANICAL ROOM OR CRAWLSPACE.
ALL CRAWLSPACE EQUIPMENT, DUCTWORK, AND PIPING IS TO BE INSTALLED PRIOR TO COMMENCING ANYWORK IN THE MECHANICAL ROOM WITH THE FOLLOWING EXCEPTIONS: 1. NO DUCTWORK FOR AHU101-102 IN AREAS ENCLOSED BY GRIDLINES D TO G AND 7 TO 9 IS TO BE INSTALLED TO ENSURE THE EXISTING UNITS' O/A INTAKES ARE NOT OBSTRUCTED. 2. NO DUCTWORK FOR AHU-302 IN AREAS ENCLOSED BY GRIDLINES F TO H AND 10 TO 12 IS TO BE INSTALLED TO ENSURE THE EXISTING UNIT'S O/A INTAKES ARE NOT OBSTRUCTED.
REFER TO SPECIFIC PHASING NOTES FOR ADDITIONAL INFORMATION.

DRAWING LIST

M-101	COVER PAGE
M-102	CRAWL SPACE DEMOLITION PLAN - MECHANICAL
M-103	PARTIAL MAIN FLOOR DEMOLITION PLAN - HVAC
M-104	PARTIAL MAIN FLOOR DEMOLITION PLAN - PIPING LAYOUT
M-105	PARTIAL MAIN FLOOR PLAN - HVAC
M-106	CRAWL SPACE FLOOR PLAN - MECHANICAL
M-107	PARTIAL MAIN FLOOR PLAN - PIPING LAYOUT
M-108	PARTIAL SECOND FLOOR PLAN - MECHANICAL
M-109	ROOF PLAN - MECHANICAL
M-110	SECTIONS - MECHANICAL
M-111	SECTIONS AND ELEVATIONS
M-112	SECTIONS, ELEVATIONS, AND DETAILS
M-113	AIR HANDLING UNIT DETAILS & HYDRONIC SCHEMATIC

SPECIFIC PHASING NOTES

AFTER THE GENERAL PHASING NOTES HAVE BEEN COMPLETED IMPLEMENT THE FOLLOWING PROJECT TASKS IN ORDER.
COORDINATE TEMPORARY SHUTDOWN OF EX. AHU-103 WITH DEPARTMENTAL REPRESENTATIVE. SHUTDOWN IS TO BE FOR NO MORE THAN 48 HOURS. EX. AHU-103 RELIEF DUCT IS TO BE PARTIALLY DEMOLISHED AS NOTED IN THE DETAIL ON SHEET M-110. REACTIVATE EX. AHU-103 AFTER RELIEF DUCT IS PARTIALLY DEMOLISHED AND REPAIRED.
INSTALL PIPING BETWEEN THE BASEMENT MECHANICAL ROOM AND THE ROOFTOP AHU-302. CONNECT TO THE EXISTING HEADERS IN THE BASEMENT MECHANICAL ROOMS. INSTALL PUMPS FOR AHU-302.
TEST, BALANCE, AND COMMISSION PUMPS FOR AHU-302.
PRE-TEST AND PRE-COMMISSION AHU-302.
INSTALL REMAINDER OF AHU-302 S/A DUCTWORK IN CRAWLSPACE. SAWCUT FLOOR PENETRATION FOR S/A FOR AHU-302. CLOSE VOLUME DAMPER IDENTIFIED IN NOTE M6.18 IN ORDER TO ALLOW FOR CONTINUED OPERATION OF EX. AHU-103.
COORDINATE SHUTDOWN OF EX. AHU-103 WITH DEPARTMENTAL REPRESENTATIVE. SHUTDOWN AHU-103. AHUTDOWN IS TO BE FOR NO MORE THAN 48 HOURS.
EXTEND AHU-302 R/A DUCTWORK AND CONNECT TO EX. AHU-103 O/A INTAKE.
PARTIALLY DEMOLISH AHU-103 TO ALLOW FOR EXTENSION OF S/A AND R/A DUCTWORK TO CONNECT TO EXISTING SYSTEM AS NOTED ON SHEET M-107.
TEST, BALANCE, AND COMMISSION AHU-302.
COMPLETE DEMOLITION OF EX. AHU-103.
INSTALL HEAT EXCHANGERS, PUMPS, PIPING, VFDS, DDC PANEL, AND HUMIDIFIERS IN BASEMENT MECHANICAL ROOM.
TEST, BALANCE, AND COMMISSION PUMPS.
COORDINATE SHUTDOWN OF EX. AHU-102 WITH DEPARTMENTAL REPRESENTATIVE. AHU-101 TO REMAIN OPERATIONAL FOR DURATION OF AHU-102 SHUTDOWN. ENSURE AHU-102 AUTOMATIC DAMPERS ARE CLOSED TO PREVENT BACKFLOW OF S/A FROM AHU-101 DURING WORK ON AHU-102 SYSTEM.
DEMOLISH AHU-102.
REMOVE EXISTING HUMIDIFIER SERVING AHU-102. REMOVE APPURTENANCES OF HUMIDIFIER SERVING AHU-102.
INSTALL, AND PIPE, EXPANSION TANKS AND GLYCOL FILL TANKS.
PRE-TEST AND PRE-COMMISSION AHU-102.
COMPLETE INSTALLATION OF REMAINING CRAWLSPACE, AND MECHANICAL ROOM DUCTWORK, FOR NEW AHU-102.
TEST, BALANCE, AND COMMISSION AHU-102.
AHU-102 TO REMAIN AS DUTY AHU FOR REMAINDER OF INSTALL PROCESS.
PRE-TEST AND PRE-COMMISSION AHU-101.
COORDINATE SHUTDOWN OF AHU-101 WITH DEPARTMENTAL REPRESENTATIVE.
DEMOLISH EX. AHU-101.
COMPLETE INSTALLATION OF REMAINING CRAWLSPACE, AND MECHANICAL ROOM DUCTWORK, FOR NEW AHU-101.
COMPLETE INSTALLATION OF REMAINING CRAWLSPACE, AND MECHANICAL ROOM DUCTWORK, FOR NEW AHU-101.
TEST, BALANCE, AND COMMISSION AHU-101.

H.V.A.C. LEGEND

DUCTWORK	THERMOMETER	GATE VALVE
DUCTWORK C/W 25mm ACOUSTIC INSULATION	THERMOSTAT/SENSOR	GLOBE VALVE
DUCTWORK C/W 50mm ACOUSTIC INSULATION	FLOW SWITCH	ANGLE GLOBE VALVE
DUCTWORK C/W 50mm DUCT INSULATION	PETE'S PLUG	STRAINER
VOLUME DAMPER	GAUGE COCK OR HOSE BIBB	CHECK VALVE
FIRE DAMPER IN VERTICAL SEPARATION	PRESSURE GAUGE	FLOW MEASUREMENT VALVE
FIRE DAMPER IN HORIZONTAL SEPARATION	XXXX EQUIPMENT TAG	2 WAY MODULATING CONTROL VALVE
HWS HOT WATER HEATING SUPPLY	NO.@ TYPE / L/S / SIZE AIR DISTRIBUTION TAG	THREE WAY CONTROL VALVE
HWR HOT WATER HEATING RETURN	TYPE / SIZE / KW RADIANT PANEL & WALL FIN TAG	AUTOMATIC AIR VENT & ISOLATION VALVE.
G GAS PIPING	V VACUUM	PRESSURE REDUCING VALVE
CHWS CHILLED WATER SUPPLY	CA COMPRESSED AIR	TEMPERATURE & PRESSURE RELIEF VALVE
CHWR CHILLED WATER RETURN	N NITROGEN	POINT OF CONNECTION
CWS CONDENSER WATER SUPPLY	HPG HIGH PRESSURE GAS	POINT OF DISCONNECTION
CWR CONDENSER WATER RETURN	AW ACID WASTE	DENOTES REMOVAL
PIPING FLEXIBLE CONNECTION	SAN SANITARY WASTE	FREEZE PROTECTION SYSTEM

ABBREVIATIONS

ABBREVIATIONS	DESCRIPTION	ABBREVIATION	DESCRIPTION
Ø	DIAMETER	kPa (g)	KILOPASCALS (GAUGE)
AC	AIR CONDITIONING UNIT	MIN	MINIMUM
AD	AIR DAMPER	MCC	MOTOR CONTROL CENTER
AFF	ABOVE FINISHED FLOOR	N.C.	NORMALLY CLOSED
AHU	AIR HANDLING UNIT	N.O.	NORMALLY OPEN
AI	ANALOG INPUT	OA, O/A	OUTDOOR AIR
CC	COOLING COIL	OD	OUTER DIAMETER
CH	CHILLER	PDEF	PLUME DILUTION EXHAUST FAN
CHWS/R	CHILLED WATER SUPPLY/RETURN	RA, R/A	RETURN AIR
CU	CONDENSING UNIT	RE & RE	REMOVE AND REINSTALL
C/W	COMPLETE WITH	REL/A	RELIEF AIR
CWS/R	CONDENSER WATER SUPPLY/RETURN	RF	RETURN FAN
DDC	DIRECT DIGITAL CONTROL	RH	ROOF HOOD
EA, E/A	EXHAUST AIR	SA, S/A	SUPPLY AIR
EBH	ELECTRIC BASEBOARD HEATER	SF	SUPPLY FAN
EF	EXHAUST FAN	SP	STATIC PRESSURE
EX.	EXISTING	TEMP	TEMPERATURE
FD	FIRE DAMPER	T/O	TOP OF
FEF	FUME EXHUAST FILTER	U/G	UNDERGROUND
FES	FUME EXHAUST SCRUBBER	UH	UNIT HEATER
HC	HEATING COIL	UTR	UP THROUGH ROOF
HWS/R	HOT WATER SUPPLY/RETURN	VAV	VARIABLE AIR VOLUME
HU	HUMIDIFIER	VD	VOLUME DAMPER
LP	LOUVERED PENTHOUSE	VFD	VARIABLE FREQUENCY DRIVE

Public Works and Government Services Canada / Travaux publics et Services gouvernementaux Canada

REAL PROPERTY SERVICES
Pacific Region
SERVICES IMMOBILIERS
Région de Pacifique

PROFESSIONAL ENGINEER — PROVINCE OF BRITISH COLUMBIA — M. MARKOVIC 24829 — JUL 13 2017

Revision/ Révision	Description/Description	Date/Date
5		
4		
3	ISSUED FOR TENDER	2017-07-13
2	ISSUED FOR 100 % CD	2017-05-09
1	PRE-TENDER CD FOR CLIENT REVIEW	2017-04-05
0	50 % REVIEW	2017-03-03

Client/client

CANADIAN FOOD INSPECTION AGENCY

Project title/Titre du projet

3155 WILLINGDON GREEN
BURNABY, BC

CFIA
AHU REPLACEMENT

Consultant Signature Only

Designed by/Concept par
MM

Drawn by/Dessine par
SE

PWGSC Project Manager/Administrateur de Projets TPSGC

Regional Manager, Architectural and Engineering Services
Gestionnaire régionale, Services d'architectural et de génie, TPSGC

Drawing title/Titre du dessin
COVER PAGE

Project No./No. du projet	Sheet/Feuille	Revision no./ La Révision no.
39903-150591	M-101 OF 13	3

PWGSC – A1 – 841X594

0 10 20 30 40 50 60 70 80 90 100mm

DM5XXXXXX

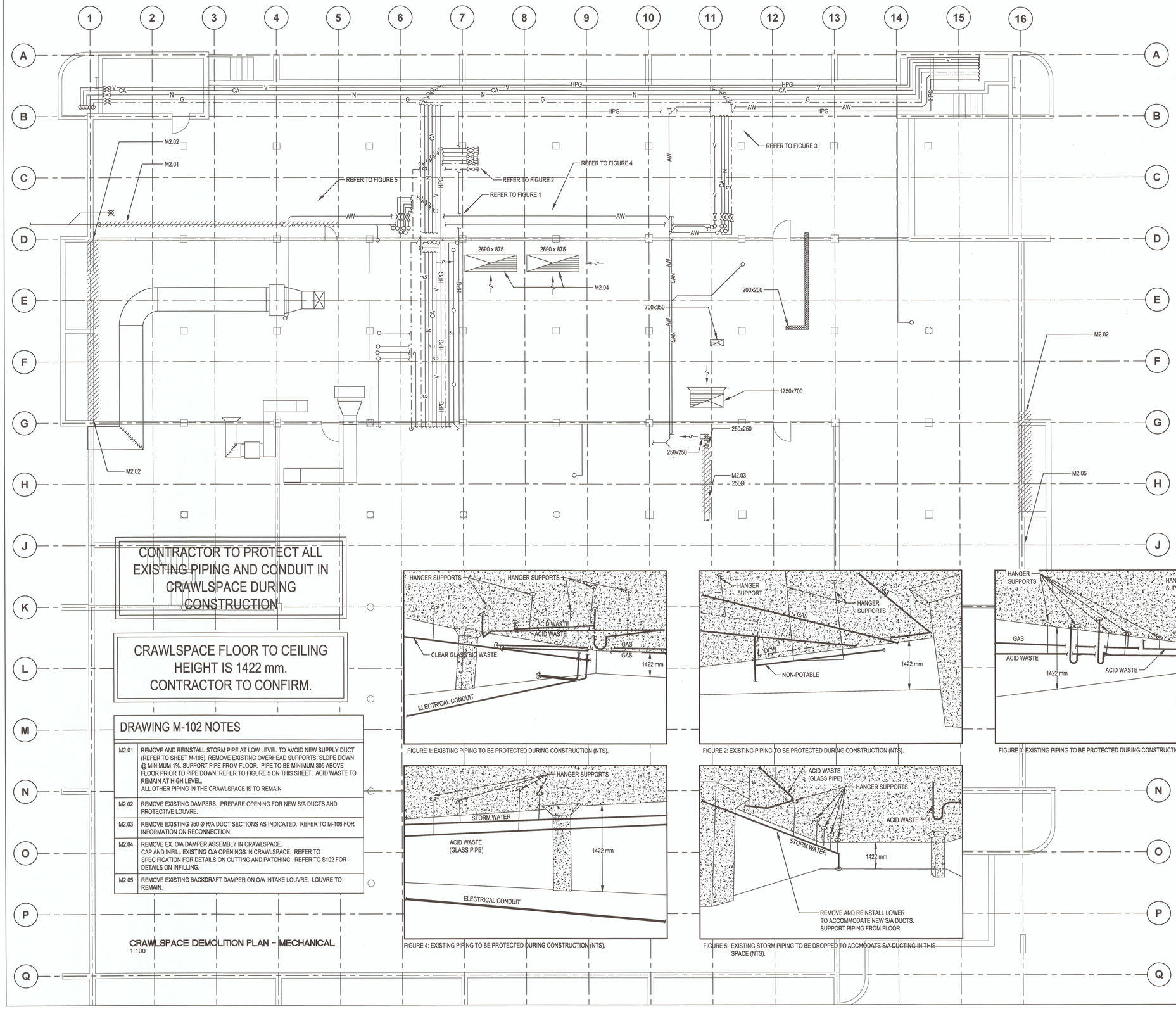

DRAWING M-102 NOTES

M2.01	REMOVE AND REINSTALL STORM PIPE AT LOW LEVEL TO AVOID NEW SUPPLY DUCT (REFER TO SHEET M-106). REMOVE EXISTING OVERHEAD SUPPORTS. SLOPE DOWN @ MINIMUM 1%. SUPPORT PIPE FROM FLOOR. PIPE TO BE MINIMUM 305 ABOVE FLOOR PRIOR TO PIPE DOWN. REFER TO FIGURE 5 ON THIS SHEET. ACID WASTE TO REMAIN AT HIGH LEVEL. ALL OTHER PIPING IN THE CRAWLSPACE IS TO REMAIN.
M2.02	REMOVE EXISTING DAMPERS. PREPARE OPENING FOR NEW S/A DUCTS AND PROTECTIVE LOUVRE.
M2.03	REMOVE EXISTING 250 Ø R/A DUCT SECTIONS AS INDICATED. REFER TO M-106 FOR INFORMATION ON RECONNECTION.
M2.04	REMOVE EX. O/A DAMPER ASSEMBLY IN CRAWLSPACE. CAP AND INFILL EXISTING O/A OPENINGS IN CRAWLSPACE. REFER TO SPECIFICATION FOR DETAILS ON CUTTING AND PATCHING. REFER TO S102 FOR DETAILS ON INFILLING.
M2.05	REMOVE EXISTING BACKDRAFT DAMPER ON O/A INTAKE LOUVRE. LOUVRE TO REMAIN.

CRAWLSPACE DEMOLITION PLAN - MECHANICAL
1:100

FIGURE 1: EXISTING PIPING TO BE PROTECTED DURING CONSTRUCTION (NTS).

FIGURE 2: EXISTING PIPING TO BE PROTECTED DURING CONSTRUCTION (NTS).

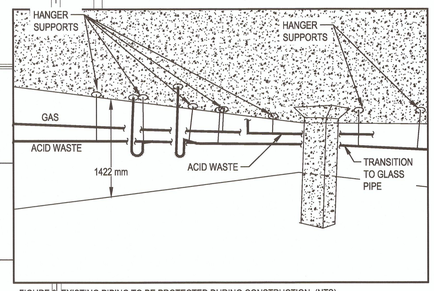

FIGURE 3: EXISTING PIPING TO BE PROTECTED DURING CONSTRUCTION (NTS).

FIGURE 4: EXISTING PIPING TO BE PROTECTED DURING CONSTRUCTION (NTS).

FIGURE 5: EXISTING STORM PIPING TO BE DROPPED TO ACCMODATE S/A DUCTING IN THIS SPACE (NTS).

Public Works and Government Services Canada
Travaux publics et Services gouvernementaux Canada

REAL PROPERTY SERVICES
Pacific Region
SERVICES IMMOBILIERS
Région de Pacifique

PROFESSIONAL ENGINEER
PROVINCE OF BRITISH COLUMBIA
M. MARKOVIC
24829
ENGINEER
JUL 13 2017

Revision/ Revision	Description/Description	Date/Date
5		
4		
3	ISSUED FOR TENDER	2017-07-13
2	ISSUED FOR 100 % CD	2017-05-09
1	PRE-TENDER CD FOR CLIENT REVIEW	2017-04-05
0	50 % REVIEW	2017-03-03

Client/client
CANADIAN FOOD INSPECTION AGENCY

Project title/Titre du projet
3155 WILLINGDON GREEN BURNABY, BC

CFIA AHU REPLACEMENT

Consultant Signature Only

Designed by/Concept par
MM

Drawn by/Dessine par
SE

PWGSC Project Manager/Administrateur de Projets TPSGC

Regional Manager, Architectural and Engineering Services
Gestionnaire régionale, Services d'architectural et de génie, TPSGC

Drawing title/Titre du dessin
CRAWL SPACE DEMOLTION PLAN - MECHANICAL

Project No./No. du projet	Sheet/Feuille	Revision no./ La Révision no.
39903-150591	M-102 OF 13	3

PWGSC – A1 – 841X594

0 10 20 30 40 50 60 70 80 90 100mm

DM5XXXXXX

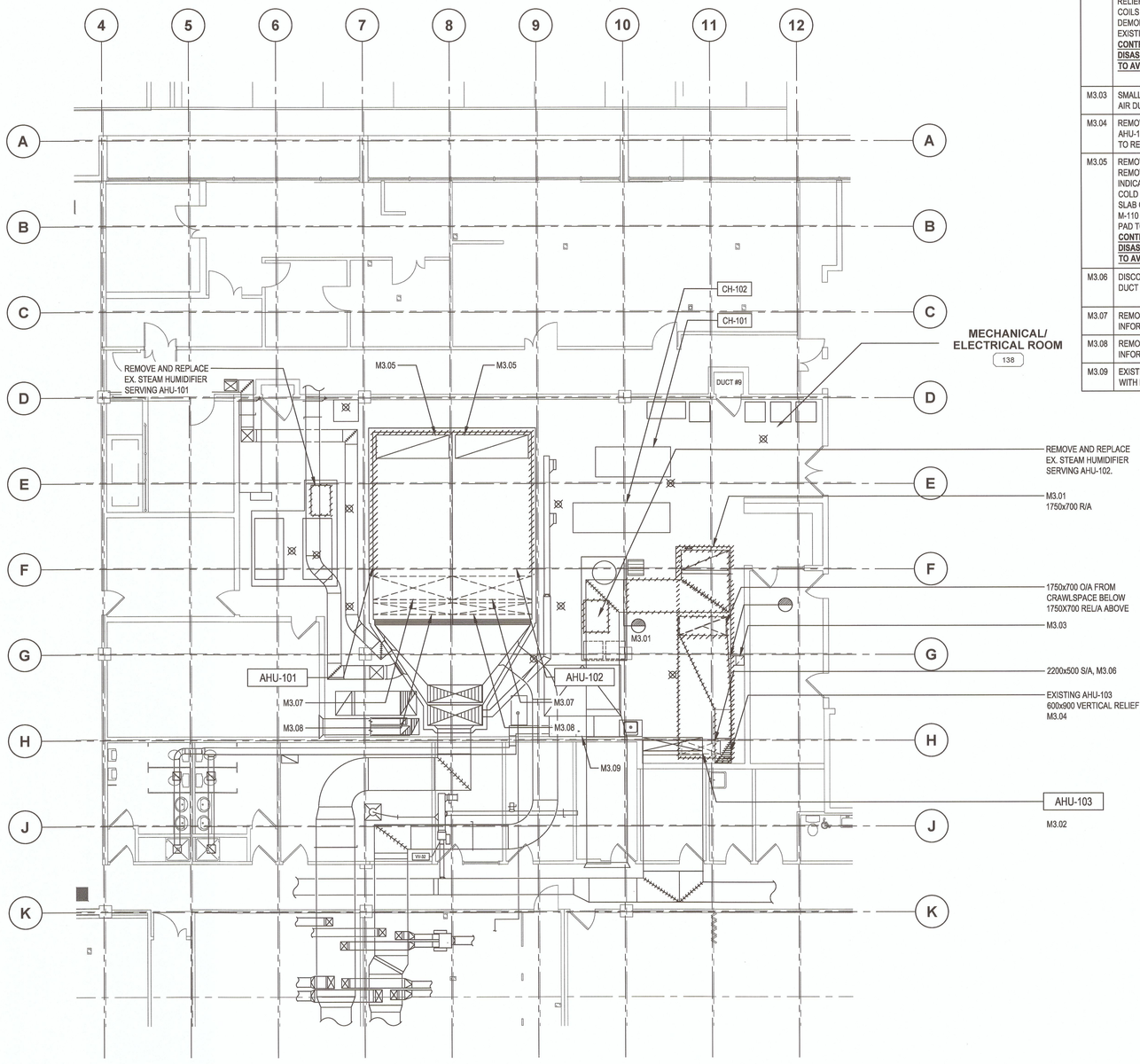

PARTIAL MAIN FLOOR DEMOLITION PLAN - HVAC
1:100

DRAWING M-103 NOTES

M3.01	DISCONNECT EXISTING 1750x700 RETURN AIR DUCT FROM AHU-103. REMOVE DUCT UP TO POINT OF DISCONNECTION. REFER TO M-107 FOR RECONNECTION INFORMATION.
M3.02	REMOVE EXISTING AHU-103. DISCONNECT SUPPLY, RETURN AND RELIEF DUCTS. REMOVE ASSOCIATED CONTROLS. DISCONNECT COILS AND CAP OFF PIPING. REFER TO M-104 FOR PIPING DEMOLITION. REFER TO M-107 FOR NEW PIPING INFORMATION. EXISTING CONCRETE PAD TO REMAIN. **CONTRACTOR TO EXCERCISE EXTREME CARE WHEN DISASSEMBLING AND REMOVING EXISTING EQUIPMENT IN ORDER TO AVOID ANY DAMAGE TO REMAINING EQUIPMENT.**
M3.03	SMALL RELIEF AIR DUCT TO REMAIN. DISCONNECT 300x350 RELIEF AIR DUCT FROM LARGE RELIEF AIR DUCT SERVING AHU-103.
M3.04	REMOVE EX. 1750x700 RELIEF AIR DUCT CONNECTED TO EXISTING AHU-103. VERTICAL 600x900 RELIEF AIR DUCT RISE UP TO ROOF TO REMAIN AS A SHAFT. SEE SECTION ON M-110.
M3.05	REMOVE EXISTING O/A FILTER, PREHEAT COIL AND HUMIDIFIER. REMOVE O/A SECTION OF EXISTING AHU-101 AND AHU-102 AS INDICATED. PREPARE AHUs FOR CONNECTION TO NEW HOT AND COLD DUCTS AS INDICATED ON SHEET M-110. INFILL EXISTING SLAB OPENINGS (REFER TO S102 FOR DETAILS). REFER TO SHEET M-110 FOR SECTION VIEW OF DEMOLITION. EXISTING CONCRETE PAD TO REMAIN. **CONTRACTOR TO EXCERCISE EXTREME CARE WHEN DISASSEMBLING AND REMOVING EXISTING EQUIPMENT IN ORDER TO AVOID ANY DAMAGE TO REMAINING EQUIPMENT.**
M3.06	DISCONNECT EX. 2200x500 S/A DUCT FROM EX AHU-103. REMOVE DUCT AS NECESSARY TO FACILTATE REMOVAL OF AHU-103.
M3.07	REMOVE EXISTING HEATING COIL. REFER TO M-104 FOR INFORMATION ON PIPING DEMOLITION.
M3.08	REMOVE EXISTING COOLING COIL. REFER TO M-104 FOR INFORMATION ON PIPING DEMOLITION.
M3.09	EXISTING WORKBENCH TO BE RELOCATED. COORDINATE ON SITE WITH DEPARTMENTAL REPRESENTATIVE.

Public Works and Government Services Canada
Travaux publics et Services gouvernementaux Canada

REAL PROPERTY SERVICES
Pacific Region
SERVICES IMMOBILIERS
Région de Pacifique

PROFESSIONAL ENGINEER PROVINCE OF BRITISH COLUMBIA
M. MARKOVIC
24659
REGISTERED
JUL 13 2017

AREA OF WORK

KEY PLAN
N.T.S

Revision/ Revision	Description/Description	Date/Date
5		
4		
3	ISSUED FOR TENDER	2017-07-13
2	ISSUED FOR 100 % CD	2017-05-09
1	PRE-TENDER CD FOR CLIENT REVIEW	2017-04-05
0	50 % REVIEW	2017-03-03

Client/client
CANADIAN FOOD INSPECTION AGENCY

Project title/Titre du projet
3155 WILLINGDON GREEN
BURNABY, BC

CFIA
AHU REPLACEMENT

Consultant Signature Only

Designed by/Concept par
MM

Drawn by/Dessine par
SE

PWGSC Project Manager/Administrateur de Projets TPSGC

Regional Manager, Architectural and Engineering Services / Gestionnaire régionale, Services d'architectural et de génie, TPSGC

Drawing title/Titre du dessin
PARTIAL MAIN FLOOR DEMOLITION PLAN - HVAC

Project No./No. du projet	Sheet/ Feuille	Revision no./ La Révision no.
39903-150591	M-103 OF 13	3

PWGSC – A1 – 841X594

0 10 20 30 40 50 60 70 80 90 100mm

DM5XXXXXX

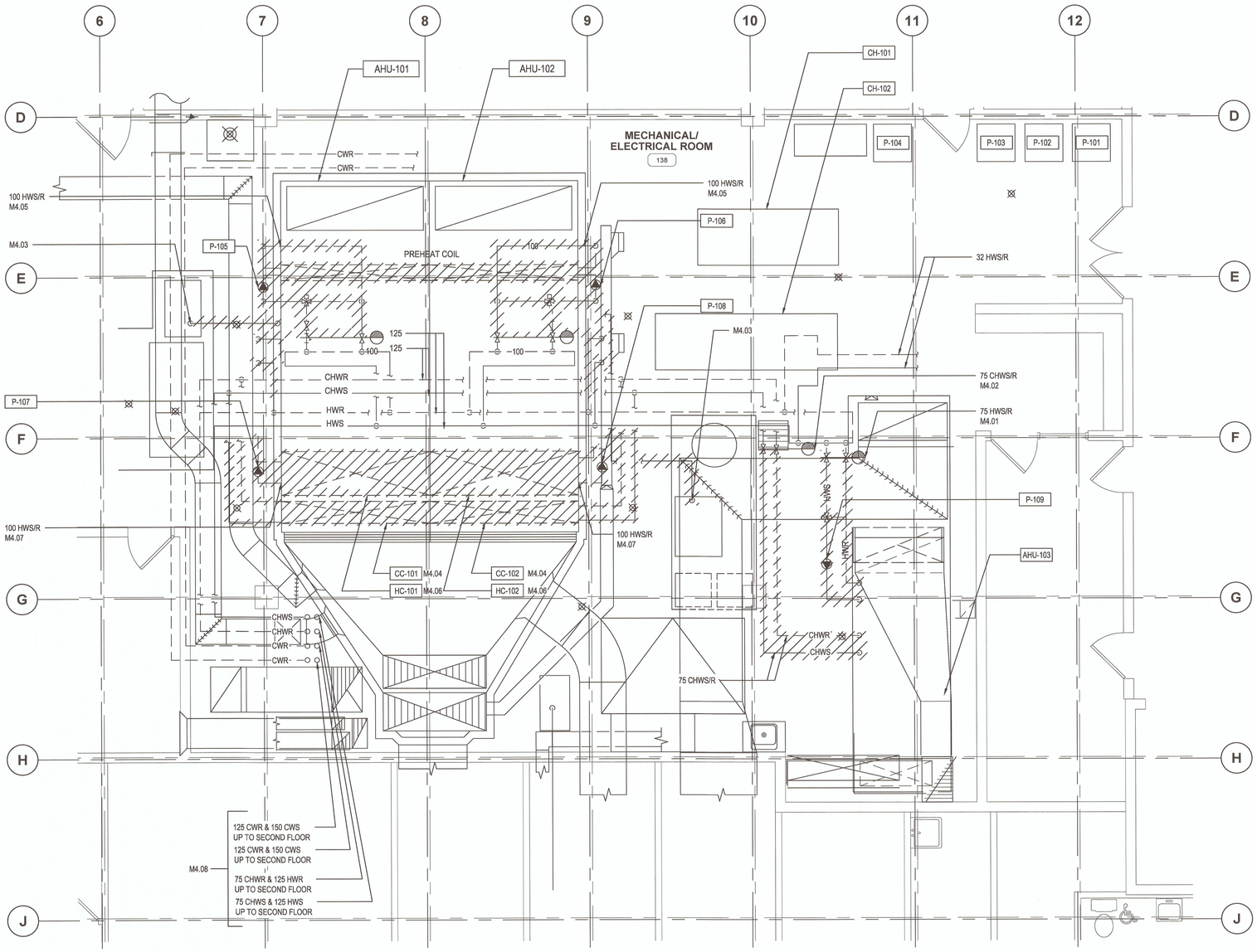

PARTIAL MAIN FLOOR DEMOLITION PLAN - PIPING LAYOUT
1:50

DRAWING M-104 NOTES

M4.01	REMOVE EXISTING HWS/R PIPE CONNECTED TO AHU-103 UP TO POINT OF DISCONNECTION AT ISOLATION VALVES AS SHOWN BY HATCH. ISOLATION VALVES TO REMAIN. CAP OFF REMAINING PIPING. EX. P-109 TO BE REMOVED. REFER TO M-107 FOR NEW PIPING CONNECTIONS.
M4.02	REMOVE EXISTING CHWS/R CONNECTED TO AHU-103 UP TO POINT OF DISCONNECTION AT ISOLATION VALVES AS SHOWN BY HATCH. ISOLATION VALVES TO REMAIN. REMOVE ASSOCIATED BALANCING VALVES AND TEST PORTS. CAP OFF REMAINING PIPING. REFER TO M-107 FOR NEW PIPING CONNECTIONS.
M4.03	DISCONNECT EXISTING HUMIDIFIER AND HUMIDIFIER INPUT TO AHU-101 AND AHU-102.
M4.04	REMOVE EXISTING COOLING COIL. ISOLATE AT HIGH LEVEL ABOVE CHWS/R MAINS LOCATED ABOVE AHU-101 AND AHU-102 . REFER TO SECTION ON M-110.
M4.05	REMOVE EX. PRE-HEAT COIL AND ASSOCIATED PIPING FOR AHU-101 AND AHU-102. ISOLATE AT VALVES LOCATED AT HIGH LEVEL ABOVE THE AHU'S.P-106 AND P-105 TO BE REMOVED.
M4.06	REMOVE EX. HC-102 AND HC-101 AND ASSOCIATED PIPING FOR AHU-101 AND AHU-102. ISOLATE AT VALVES LOCATED AT HIGH LEVEL ABOVE THE AHU'S. PUMPS P-108 AND P-107 TO BE REMOVED.
M4.07	REMOVE P-107, P-108, BOOSTER HEATING COIL, COOLING COILS, AND ALL PIPING BACK TO ISOLATION VALVES. VALVES NOT SHOWN ON FLOOR PLAN FOR CLARITY. REFER TO SCHEMATIC ON M-113.
M4.08	ALL HWS/R, CHWS/R, & CWS/R PIPING IDENTIFIED AS GOING UP TO SECOND FLOOR IS TO REMAIN.

Public Works and Government Services Canada / Travaux publics et Services gouvernementaux Canada

REAL PROPERTY SERVICES
Pacific Region
SERVICES IMMOBILIERS
Région de Pacifique

PROFESSIONAL ENGINEER
PROVINCE OF BRITISH COLUMBIA
M. MARKOVIC
24829
COLUMBIA
JUL 13 2017

AREA OF WORK

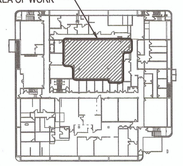

KEY PLAN
N.T.S

Revision/ Révision	Description/Description	Date/Date
5		
4		
3	ISSUED FOR TENDER	2017-07-13
2	ISSUED FOR 100 % CD	2017-05-09
1	PRE-TENDER CD FOR CLIENT REVIEW	2017-04-05
0	50 % REVIEW	2017-03-03

Client/client

CANADIAN FOOD INSPECTION AGENCY

Project title/Titre du projet

3155 WILLINGDON GREEN
BURNABY, BC

CFIA
AHU REPLACEMENT

Consultant Signature Only

Designed by/Concept par
MM

Drawn by/Dessine par
SE

PWGSC Project Manager/Administrateur de Projets TPSGC

Regional Manager, Architectural and Engineering Services
Gestionnaire régionale, Services d'architecture et de génie, TPSGC

Drawing title/Titre du dessin

PARTIAL MAIN FLOOR DEMOLITION PLAN - PIPING LAYOUT

Project No./No. du projet	Sheet/ Feuille	Revision no./ La Révision no.
39903-150591	M-104 OF 13	3

PWGSC – A1 – 841X594

0 10 20 30 40 50 60 70 80 90 100mm

DM5XXXXXX

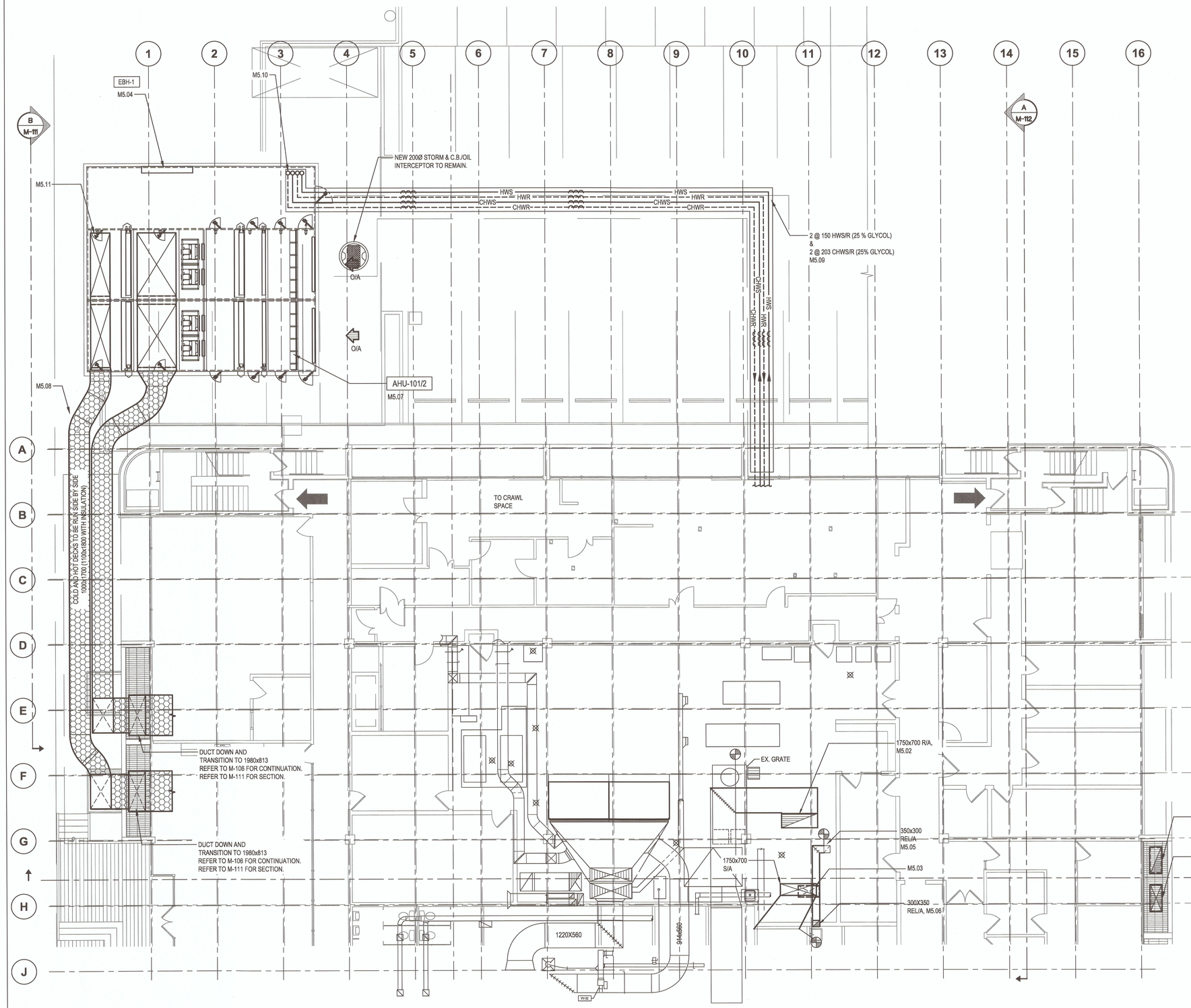

PARTIAL MAIN FLOOR PLAN - HVAC
1:100

DRAWING M-105 NOTES

M5.01	NEW S/A AND R/A UP TO AHU-302 ON THE ROOF & DOWN TO CRAWLSPACE. REFER TO M-106 FOR CRAWLSPACE CONTINUATION. REFER TO M-109 FOR ROOFTOP CONTINUATION. REFER TO M-111 AND M-112 FOR SECTIONS OF DUCT UP.
M5.02	NEW 1750x700 R/A DUCT DOWN TO CRAWL SPACE SERVING AHU-302.
M5.03	NEW 1000x560 S/A DUCT DOWN TO CRAWL SPACE SERVING AHU-103. OFFSET AS REQUIRED, PROVIDE NEW 1750x700 S/A DUCT, AND CONNECT TO EX. S/A DUCT. SAWCUT FLOOR AS REQUIRED. REFER TO M-106 FOR CONTINUATION.
M5.04	PROVIDE EBH-1 IN PIPING VESTIBULE INSIDE AHU-101/2.
M5.05	CONNECT NEW 300x350 RELIEF DUCT TO EXISTING 300x350 RELIEF DUCT. RUN AT HIGH LEVEL TIGHT TO U/S OF CEILING.
M5.06	RUN NEW 300x350 REL/A DUCT UP TO ROOF THROUGH EXISTING 600x900 REL/A DUCT THAT PREVIOUSLY SERVED THE EX. AHU-302. RUN TIGHT TO SOUTH SIDE OF DUCT. MAKE AN AIR TIGHT CONNECTION TO EX. ROOF HOOD. REFER TO M-110 FOR DETAIL. REFER TO M-108 FOR CONTINUATION.
M5.07	PROVIDE NEW AHU-101/2. MOUNT ON 100mm HIGH CONCRETE PAD 150mm LARGER THAN THE FOOTPRINT OF THE EQUIPMENT. UNIT IS TO COME COMPLETE WITH KEY LOCKABLE VESTIBULE. REFER TO S102 FOR DETAILS ON MOUNTING/SUPPORT. REFER TO M-113 FOR DIMENSIONS. REFER TO SPECIFICATION FOR SCHEDULES.
M5.08	EXTERIOR S/A DUCT. REFER TO ARCHITECTURAL DRAWINGS FOR EXTERIOR ENCLOSURE. DUCT TO BE THERMALLY INSULATED (50 mm) WITH AN ALUMINIUM JACKET. REFER TO A110 FOR DUCT ENCLOSURE. REFER TO S101, S102, AND S103 FOR SUPPORT DETAILS.
M5.09	2@ HWS&R AND 2@ CHWS/R PRE-INSULATED PIPE BURIED MIN. 600mm PIPES TO BE BURIED UNDERNEATH PARKING LOT IN A PIPE TRENCH. SEE DETAIL ON CIVIL DRAWING C102 AND SPECIFICATION FOR PIPE TRENCH. PROVIDE HEAT TRACE AS INDICATED. COLD PIPING HEAT TRACE TO BE 12 W/m. HOT PIPING HEAT TRACE TO BE 10 W/m. REFER TO ELECTRICAL DRAWING E.1.03 FOR 50 mm DDC CONDUIT FOR AHU-101/2.
M5.10	2@ HWS/R PIPE AND 2@CHWS/R TO ENTER AHU-101/2 UP THROUGH FLOOR INSIDE AHU ENCLOSURE. SEE SCHEMATIC ON M-113 FOR CONNECTION DETAILS. PIPES SHOWN OFFSET FOR CLARITY. CONNECTIONS FOR 102 COILS ARE TO RUN THROUGH THE UNIT.
M5.11	TRANSITION, IN VERTICAL, FROM 965 WIDE OPENING IN AHU TO 1000 WIDE COLD DUCT.

Public Works and Government Services Canada
Travaux publics et Services gouvernementaux Canada

REAL PROPERTY SERVICES
Pacific Region
SERVICES IMMOBILIERS
Région de Pacifique

PROFESSIONAL ENGINEER
M. MARKOVIC
24029
PROVINCE OF BRITISH COLUMBIA
ENGINEER
JUL 13 2017

AREA OF WORK

KEY PLAN
N.T.S

Revision/ Revision	Description/Description	Date/Date
5		
4		
3	ISSUED FOR TENDER	2017-07-13
2	ISSUED FOR 100 % CD	2017-05-09
1	PRE-TENDER CD FOR CLIENT REVIEW	2017-04-05
0	50 % REVIEW	2017-03-03

Client/client

CANADIAN FOOD INSPECTION AGENCY

Project title/Titre du projet

3155 WILLINGDON GREEN
BURNABY, BC

CFIA
AHU REPLACEMENT

Consultant Signature Only

Designed by/Concept par
MM

Drawn by/Dessine par
SE

PWGSC Project Manager/Administrateur de Projets TPSGC

Regional Manager, Architectural and Engineering Services
Gestionnaire régionale, Services d'architectural et de génie, TPSGC

Drawing title/Titre du dessin

PARTIAL MAIN FLOOR PLAN - HVAC

Project No./No. du projet	Sheet/ Feuille	Revision no./ La Révision no.
39903-150591	M-105 OF 13	3

PWGSC – A1 – 841X594

0 10 20 30 40 50 60 70 80 90 100mm

DM5XXXXXX

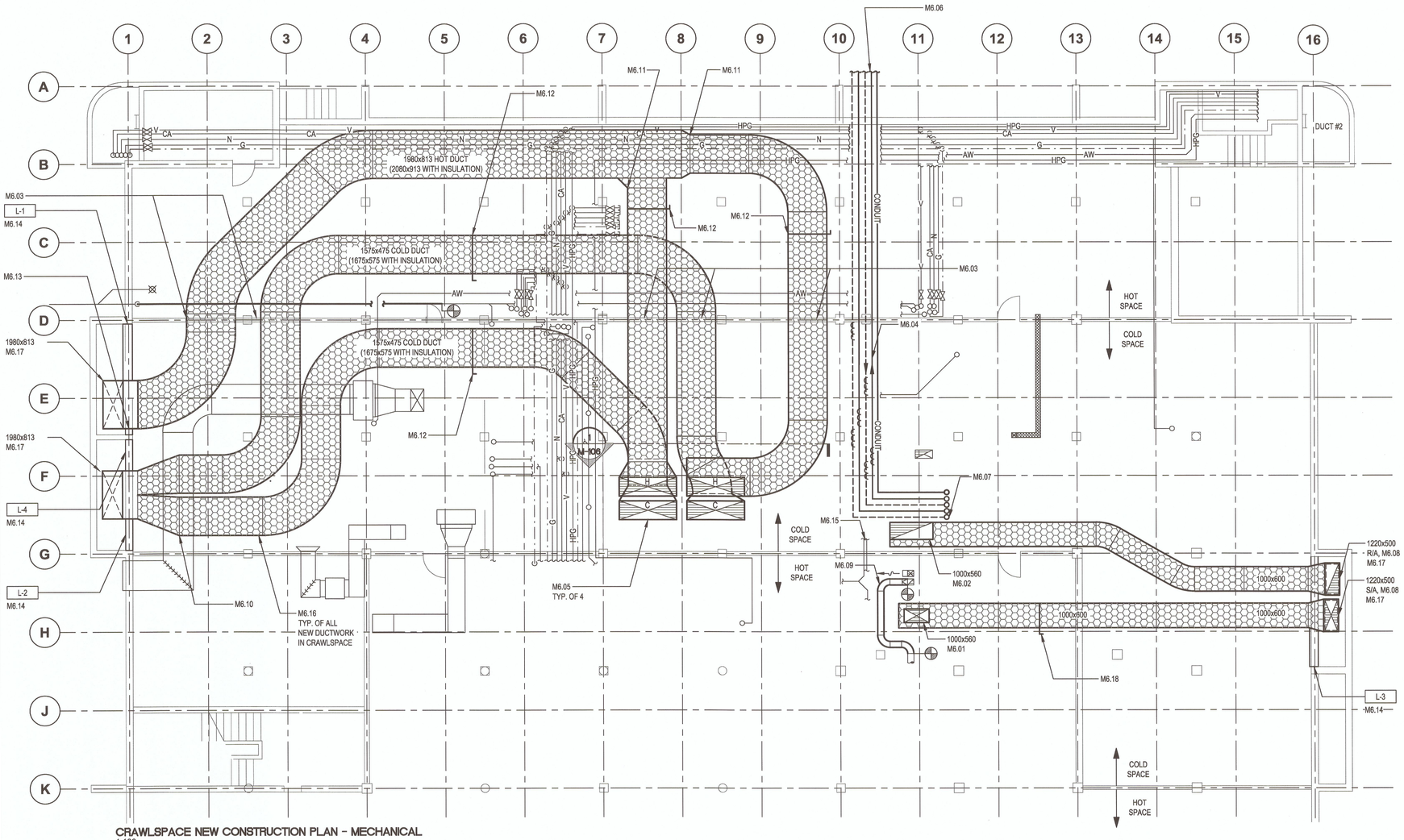

CRAWLSPACE NEW CONSTRUCTION PLAN - MECHANICAL
1:100

CONTRACTOR TO PROTECT ALL EXISTING PIPING AND CONDUIT IN CRAWLSPACE DURING CONSTRUCTION.

CRAWLSPACE FLOOR TO CEILING HEIGHT IS 1422 mm

DRAWING M-106 NOTES

M6.01	SAW CUT CONCRETE FLOOR AND CONNECT 1000x560 RISER TO S/A PLENUM ABOVE IN MECHANICAL ROOM. REFER TO SPECIFICATION FOR DETAILS ON CUTTING/PATCHING.
M6.02	CONNECT NEW R/A DUCT TO EXISTING OPENINGS [INCREASE SIZE] OR SAW CUT CONCRETE FLOOR IF NECESSARY. CONNECT 1000x560 RISER TO TO R/A DUCT ABOVE IN MECHANICAL ROOM. REFER TO SPECIFICATION FOR DETAILS ON CUTTING/PATCHING.
M6.03	OPEN PARTITION AND SEAL DUCT. REFER TO SPECIFICATION FOR FURTHER INFORMATION.
M6.04	HYDRONIC PIPING LOCATED IN COLD INTAKE SPACE TO BE PROVIDED WITH FREEZE PROTECTION (HEAT TRACE). COLD PIPING HEAT TRACE TO BE 21 W/m. HOT PIPING HEAT TRACE TO BE 17 W/m. RUN NEW PIPING BELOW EXISTING. REFER TO SHEET M-102 FOR EXISTING PIPING IN THIS AREA.
M6.05	NEW 2350x775 S/A DUCT UP (C/W TURNING VANES) TO GROUND LEVEL FROM AHU 101/2. CONNECT TO S/A DUCTS. SAWCUT NEW OPENINGS. REFER TO SPECIFICATION FOR DETAILS ON CUTTING/PATCHING. REFER TO S102 FOR DETAILS. REFER TO M-107 FOR CONTINUATION.
M6.06	2@ 152 HWS/R & 2@ 203 CHWS/R TO BE RUN IN A TRENCH UNDER THE PARKING LOT TO AHU-101/2 LOCATED OUTSIDE. PIPING TO BE HEAT TRACED. COLD PIPING HEAT TRACE TO BE 12 W/m. HOT PIPING HEAT TRACE TO BE 10 W/m. REFER TO M-105 FOR CONTINUATION.
M6.07	2@ 152 HWS/R & 2@ 203 CHWS/R PIPE UP TO NEW PUMP STATION LOCATED IN MECHANICAL ROOM. REFER TO M-107 FOR CONTINUATION.
M6.08	S/A AND R/A DUCT UP TO AHU-302 ON THE ROOF. PROVIDE SHEETMETAL COVER BETWEEN DUCTS AND FROM R/A DUCT AND NORTH WALL IN ORDER TO PREVENT WATER INGRESS.
M6.09	CONNECT NEW 250 DUCTWORK TO EX. 250X250 RELIEF AIR SERVING FF-001. OFFSET AROUND NEW 1000x800 S/A PENETRATION. CONNECT TO EXISTING 250 DUCTWORK SERVING FF-001 AT POINTS OF CONNECTION.
M6.10	TRANSITION TO TWO COLD DUCTS. EACH DUCT TO MEASURE 1575x475 (1675x575 WITH INSULATION).
M6.11	TRANSITION TO TWO HOT DUCTS. EACH DUCT TO MEASURE 1575x475 (1675x575 WITH INSULATION).
M6.12	PROVIDE MANUAL VOLUME DAMPERS IN BRANCH DUCTS AS INDICATED. BALANCE FOR EQUAL FLOW IN EACH HOT DUCT AND EACH COLD DUCT.
M6.13	PROVIDE SHEETMETAL COVER FOR OPENING SOUTH OF NEW DUCT.
M6.14	PROVIDE NEW LOUVRE FOR OPENING. LOCATE TIGHT TO NEW DUCT. SEAL GAP BETWEEN DUCT AND LOUVRE. REFER TO SCHEDULE FOR LOUVRE SIZE.
M6.15	REFER TO SHEET M-102 FOR EXISTING CRAWLSPACE PIPING IN VICINITY OF NEW PIPING.
M6.16	NEW DUCT TO BE RUN BELOW EXISTING PIPING UNLESS NOTED OTHERWISE.
M6.17	SEAL AROUND DUCT ENTERING CRAWLSPACE.
M6.18	PROVIDE BALANCING DAMPER IN SUPPLY DUCT. DAMPER TO BE USED TO STOP AIRFLOW DURING TRANSITION BETWEEN OPERATION OF EX. AHU-103 AND NEW AHU-302.

Public Works and Government Services Canada / Travaux publics et Services gouvernementaux Canada

REAL PROPERTY SERVICES
Pacific Region
SERVICES IMMOBILIERS
Région de Pacifique

PROFESSIONAL ENGINEER
M. MARKOVIC
24829
CERTIFIED
COLUMBIA
ENGINEER
AUG 1 3 2017

Revision/ Revision	Description/Description	Date/Date
5		
4		
3	ISSUED FOR TENDER	2017-07-13
2	ISSUED FOR 100 % CD	2017-05-09
1	PRE-TENDER CD FOR CLIENT REVIEW	2017-04-05
0	50 % REVIEW	2017-03-03

Client/client
CANADIAN FOOD INSPECTION AGENCY

Project title/Titre du projet
3155 WILLINGDON GREEN
BURNABY, BC

CFIA
AHU REPLACEMENT

Consultant Signature Only

Designed by/Concept par
MM

Drawn by/Dessine par
SE

PWGSC Project Manager/Administrateur de Projets TPSGC

Regional Manager, Architectural and Engineering Services
Gestionnaire régionale, Services d'architecture et de génie, TPSGC

Drawing title/Titre du dessin
CRAWLSPACE FLOOR PLAN - MECHANICAL

Project No./No. du projet	Sheet/ Feuille	Revision no./ La Révision no.
39903-150591	M-106 OF 13	3

PWGSC – A1 – 841X594

0 10 20 30 40 50 60 70 80 90 100mm

DM5XXXXXX

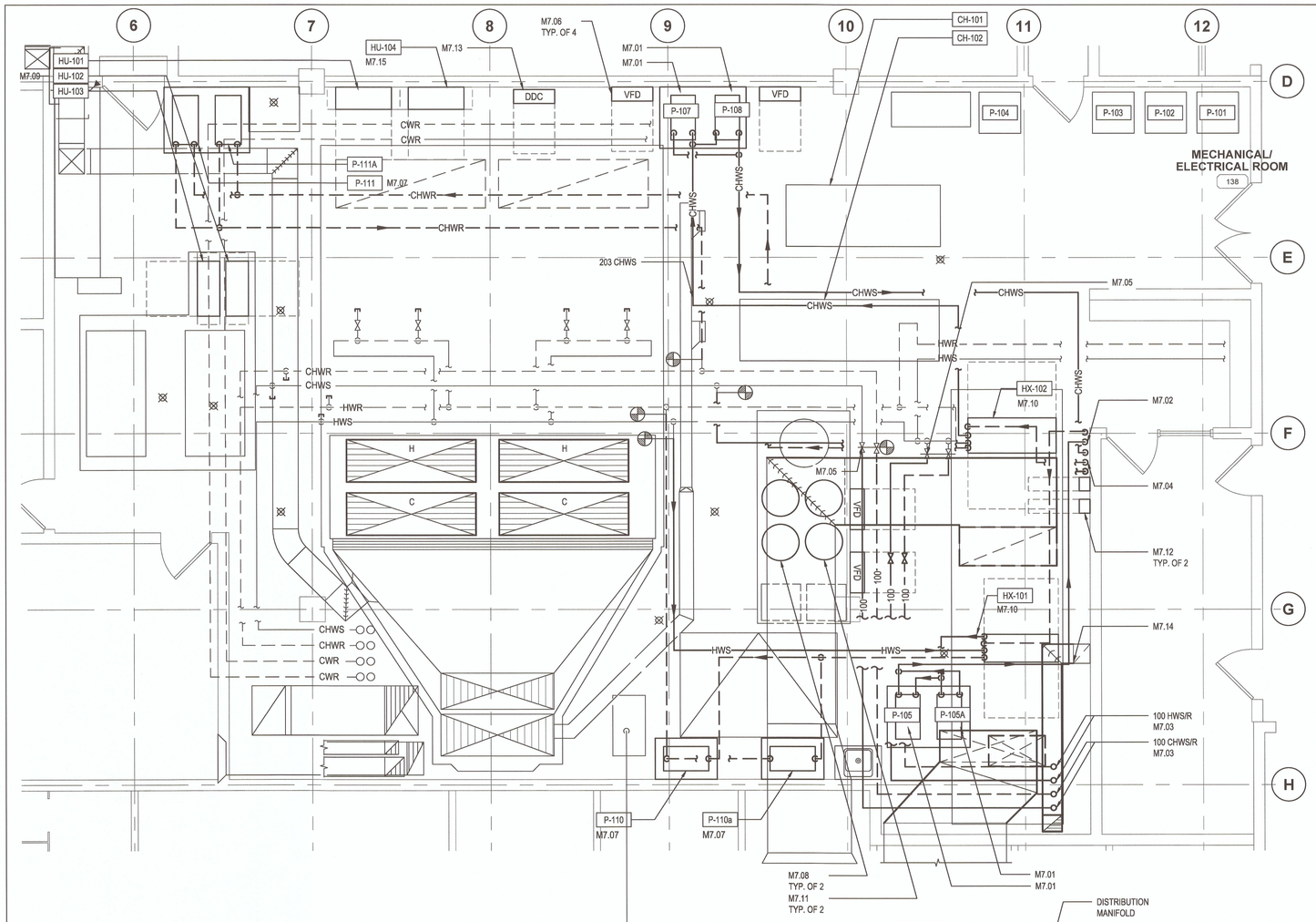

MAIN FLOOR PLAN - PIPING LAYOUT
1:50

DRAWING M-107 NOTES

M7.01	PROVIDE NEW PUMP STATION. PROVIDE 100mm HIGH ALUMINIUM DRIP TRAY AND PIPE TO NEAREST DRAIN. SEE DETAILS BELOW. PROVIDE NEW/REUSE EXISTING CONCRETE PAD/EXTEND EXISTING CONCRETE PAD AS REQUIRED. VALVE AND FITTING INFORMATION IS LEFT OUT FOR CLARITY. REFER TO HYDRONIC SCHEMATIC ON M-113 FOR DETAILS ON VALVES AND FITTINGS. CONNECT GLYCOL FILL AND EXPANSION TANK, PER MANUFACTURER'S RECOMMENDATIONS.
M7.02	2@ HWS/R PIPE DOWN TO CRAWL SPACE BELOW. VALVES AND FITTINGS NOT SHOWN FOR CLARITY. REFER TO PIPING SCHEMATIC ON SHEET M-113. REFER TO M-106 FOR CONTINUATION.
M7.03	2@ 100Ø HWS/R PIPE AND 2@ 100Ø CHWS/R PIPE UP TO SECOND FLOOR CEILING SPACE. RUN THROUGH SHAFT CREATED BY EX. 600x900 RELA DUCT THAT PREVIOUSLY SERVED EX. AHU-302. RUN ON THE NORTH SIDE OF THE DUCT, COORDINATE WITH NEW 300x350 RELA DUCT.
M7.04	2@ CHWS/R PIPE DOWN TO CRAWL SPACE BELOW. VALVES AND FITTINGS NOT SHOWN FOR CLARITY. REFER TO PIPING SCHEMATIC ON SHEET M-113.
M7.05	CONNECT NEW 100Ø CHWS/R PIPE TO EXISTING 150Ø CHWS/R PIPE.
M7.06	PROVIDE PUMP VFDS. MOUNT ON UNISTRUT.
M7.07	PROVIDE NEW IN-LINE CIRCULATOR PUMPS. REFER TO HYDRONIC SCHEMATIC FOR DETAILS ON VALVES AND FITTINGS. DO NOT OBSTRUCT EXISTING CRAWLSPACE ACCESS HATCH.
M7.08	PROVIDE NEW ASME RATED EXPANSION TANK. REFER TO SPECIFICATION, AND SHEET M-113, FOR ADDITIONAL INFORMATION. CONNECT TO GLYCOL LOOPS PER MANUFACTURER'S RECOMMENDATIONS. REFER TO HYDRONIC SCHEMATIC ON M-113 FOR CONNECTION LOCATIONS.
M7.09	PROVIDE NEW HUMIDIFIER. CONNECT HUMIDIFIERS TO EXISTING DEIONIZED WATER SUPPLY. MAINTAIN CLEARANCES PER MANUFACTURER'S RECOMMENDATIONS. INSTALL UNITS ON UNISTRUT (MINIMUM 610 ABOVE FLOOR) OR KEYHOLE WALLMOUNT. DIRECT CONDENSATE LINE TO FUNNEL FLOOR DRAIN IN AREA. REFER TO MANUFACTURER'S DOCUMENTATION FOR DETAILS ON PIPING REQUIREMENTS. CONNECT TO SUPPLY DUCTS AS NOTED ON SHEET M-110. HUMIDIFIERS TO BE CAPABLE OF DISTRIBUTING TO HOT AND/OR COLD DECK AS REQUIRED. I.E. UNITS ARE TO BE CAPAPBLE OF SWITCHING DECKS BASED UPON OPERATING CONDITIONS.
M7.10	INSTALL GLYCOL TO WATER HEAT EXCHANGER AS SHOWN. PROVIDE CONCRETE HOUSEKEEPING PAD. INSTALL PER MANUFACTURER'S RECOMMENDATIONS.
M7.11	PROVIDE NEW GLYCOL FEED TANK. INSTALL PER MANUFACTURER'S DOCUMENTATION. REFER TO HYDRONIC SCHEMATIC ON SHEET M-113 FOR CONNECTION POINT.
M7.12	HEAT TRACE CONTROL PANELS (2 CIRCUITS EACH).
M7.13	DDC PANEL. FOR AHU OUTSIDE.
M7.14	REFER TO M-110 FOR DETAILS ON NEW DUCT CONNECTION.
M7.15	FUTURE HUMIDIFIER LOCATION. INFRASTRUCTURE (ELECTRICAL, STEAM DISTRIBUTION, DI WATER, ETC) TO BE INSTALLED IN THE SCOPE OF THIS PROJECT. HUMIDIFIER IS NOT TO BE INSTALLED OR PROVIDED IN THIS PROJECT.

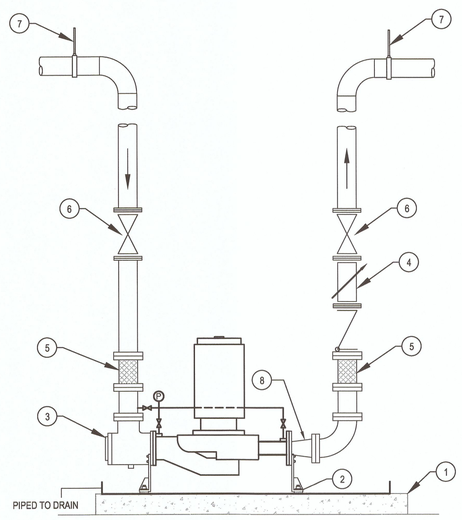

1. 100 HIGH CONCRETE HOUSEKEEPING PAD WITH 150 HIGH SHEET METAL DRAIN PAN. PROVIDE NEW HOUSEKEEPING PAD WHERE SPECIFIED ON PLANS.
2. STANCHION PLATES C/W NEOPRENE PAD, ANCHORED TO CONCRETE PAD.
3. SUCTION GUIDE C/W STRAINER
4. MEMORY STOP BALANCING VALVE.
5. FLEXIBLE PIPE CONNECTOR (MINIMUM LENGTH TO MATCH SPECIFIED PRODUCT, OR APPROVED EQUAL)
6. ISOLATION VALVE.
7. SUPPORT PIPE WITHIN 12" FROM RISER.
8. TRANSITION SPOOL PIECE.

FLOOR MOUNTED VERTICAL INLINE PUMP DETAIL
N.T.S.

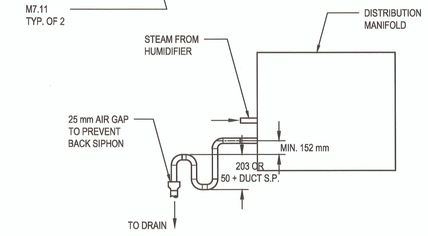

HUMIDIFIER DISTRIBUTOR PIPING
N.T.S.

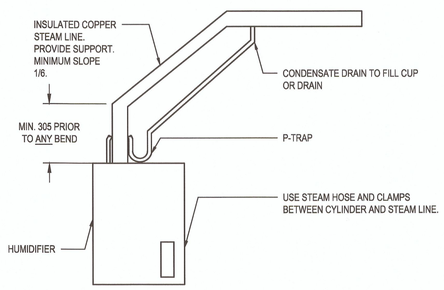

HUMIDIFIER ATMOSPHERIC STEAM LINE INSTALLATION
N.T.S.

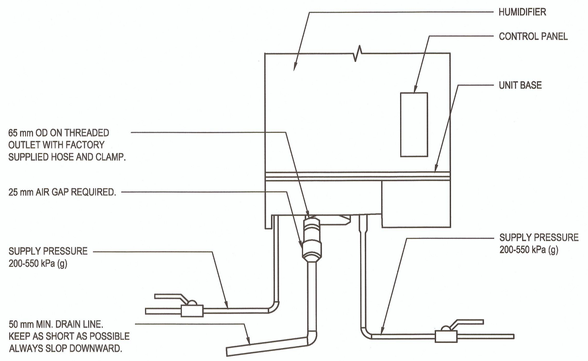

HUMIDIFIER WATER SUPPLY AND DRAIN CONNECTION
N.T.S.

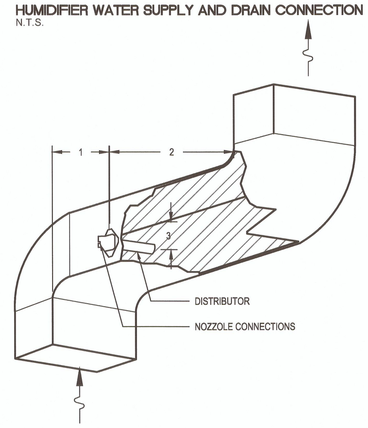

1. MAINTAIN A MINIMUM OF 2 DUCT HEIGHTS BETWEEN UPSTREAM ELBOW AND DISTRIBUTOR.
2. MAINTAIN THE CALCULATED ABSORPTION DISTANCE TO ANY OBSTRUCTION DOWNSTREAM OF DISTRIBUTOR. (IF ABSORPTION DISTANCE UNKNOWN MAINTAIN 2400 mm CLEARANCE)
3. MOUNT DISTRIBUTOR 2/3 OF THE DUCT HEIGHT FROM THE TOP OF THE DUCT.

HUMIDIFIER DISTRIBUTOR INSTALLATION
N.T.S.

Public Works and Government Services Canada / Travaux publics et Services gouvernementaux Canada

REAL PROPERTY SERVICES
Pacific Region
SERVICES IMMOBILIERS
Région de Pacifique

PROFESSIONAL ENGINEER
PROVINCE OF BRITISH COLUMBIA
M. MARKOVIC
24829
JUL 13 2017

AREA OF WORK

KEY PLAN
N.T.S

Revision/ Revision	Description/Description	Date/Date
5		
4		
3	ISSUED FOR TENDER	2017-07-13
2	ISSUED FOR 100 % CD	2017-05-09
1	PRE-TENDER CD FOR CLIENT REVIEW	2017-04-05
0	50 % REVIEW	2017-03-03

Client/client
CANADIAN FOOD INSPECTION AGENCY

Project title/Titre du projet
3155 WILLINGDON GREEN
BURNABY, BC

CFIA
AHU REPLACEMENT

Consultant Signature Only

Designed by/Concept par
MM

Drawn by/Dessine par
SE

PWGSC Project Manager/Administrateur de Projets TPSGC

Regional Manager, Architectural and Engineering Services
Gestionnaire régionale, Services d'architectural et de génie, TPSGC

Drawing title/Titre du dessin
PARTIAL MAIN FLOOR PLAN - PIPING LAYOUT

Project No./No. du projet	Sheet/Feuille	Revision no./ La Révision no.
39903-150591	M-107 OF 13	3

PWGSC – A1 – 841X594

0 10 20 30 40 50 60 70 80 90 100mm

DM5XXXXXX

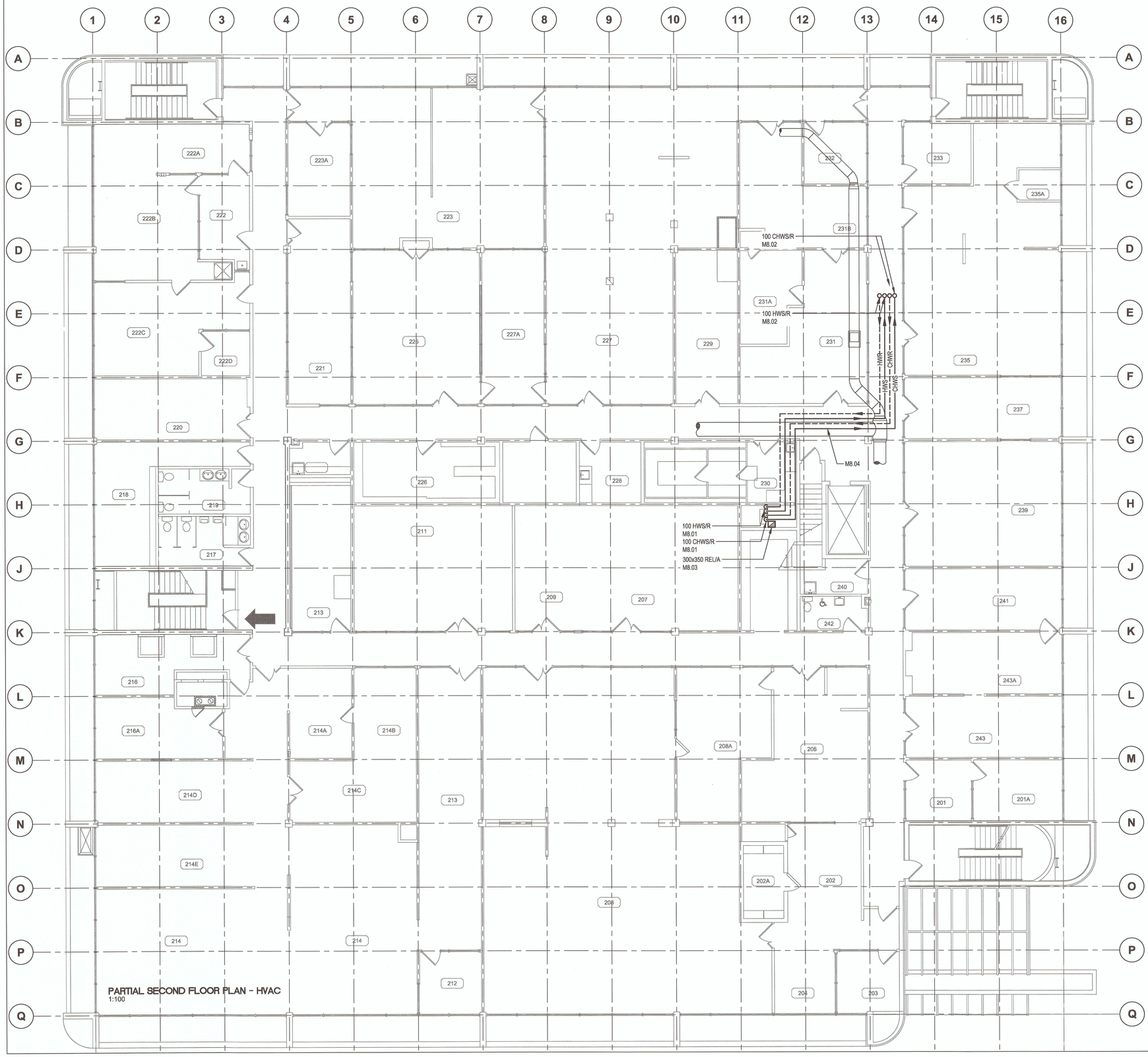

PARTIAL SECOND FLOOR PLAN - HVAC
1:100

DRAWING M-108 NOTES

M8.01	100 HWS/R AND CHWS/R DOWN TO BOILER ROOM ON FIRST FLOOR THROUGH EX. 600x900 REL/A DUCT. REFER TO M-107 FOR CONTINUATION.
M8.02	100 HWS/R AND CHWS/R UP TO NORTH PENTHOUSE. REFER TO M-109 FOR CONTINUATION.
M8.03	RUN NEW 300X350 RELIEF AIR DUCT UP TO ROOF. MAKE AN AIR TIGHT CONNECTION TO EX. ROOF HOOD. SEE DETAIL ON M-110.
M8.04	RUN NEW 100 mm PIPING ABOVE EXISTING DUCT, TIGHT TO U/S OF CEILING.

PWGSC – A1 – 841X594

0 10 20 30 40 50 60 70 80 90 100mm

Public Works and Government Services Canada
Travaux publics et Services gouvernementaux Canada

REAL PROPERTY SERVICES
Pacific Region
SERVICES IMMOBILIERS
Région de Pacifique

PROFESSIONAL ENGINEER
PROVINCE OF BRITISH COLUMBIA
M. MARKOVIC
24829
JUL 13 2017

AREA OF WORK

KEY PLAN
N.T.S

Revision/ Revision	Description/Description	Date/Date
5		
4		
3	ISSUED FOR TENDER	2017-07-13
2	ISSUED FOR 100 % CD	2017-05-09
1	PRE-TENDER CD FOR CLIENT REVIEW	2017-04-05
0	50 % REVIEW	2017-03-03

Client/client

CANADIAN FOOD INSPECTION AGENCY

Project title/Titre du projet

3155 WILLINGDON GREEN BURNABY, BC

CFIA AHU REPLACEMENT

Consultant Signature Only

Designed by/Concept par
MM

Drawn by/Dessine par
SE

PWGSC Project Manager/Administrateur de Projets TPSGC

Regional Manager, Architectural and Engineering Services / Gestionnaire régionale, Services d'architectural et de génie, TPSGC

Drawing title/Titre du dessin

PARTIAL SECOND FLOOR PLAN - MECHANICAL

Project No./No. du projet	Sheet/ Feuille	Revision no./ La Révision no.
39903-150591	M-108 OF 13	3

DM5XXXXXX

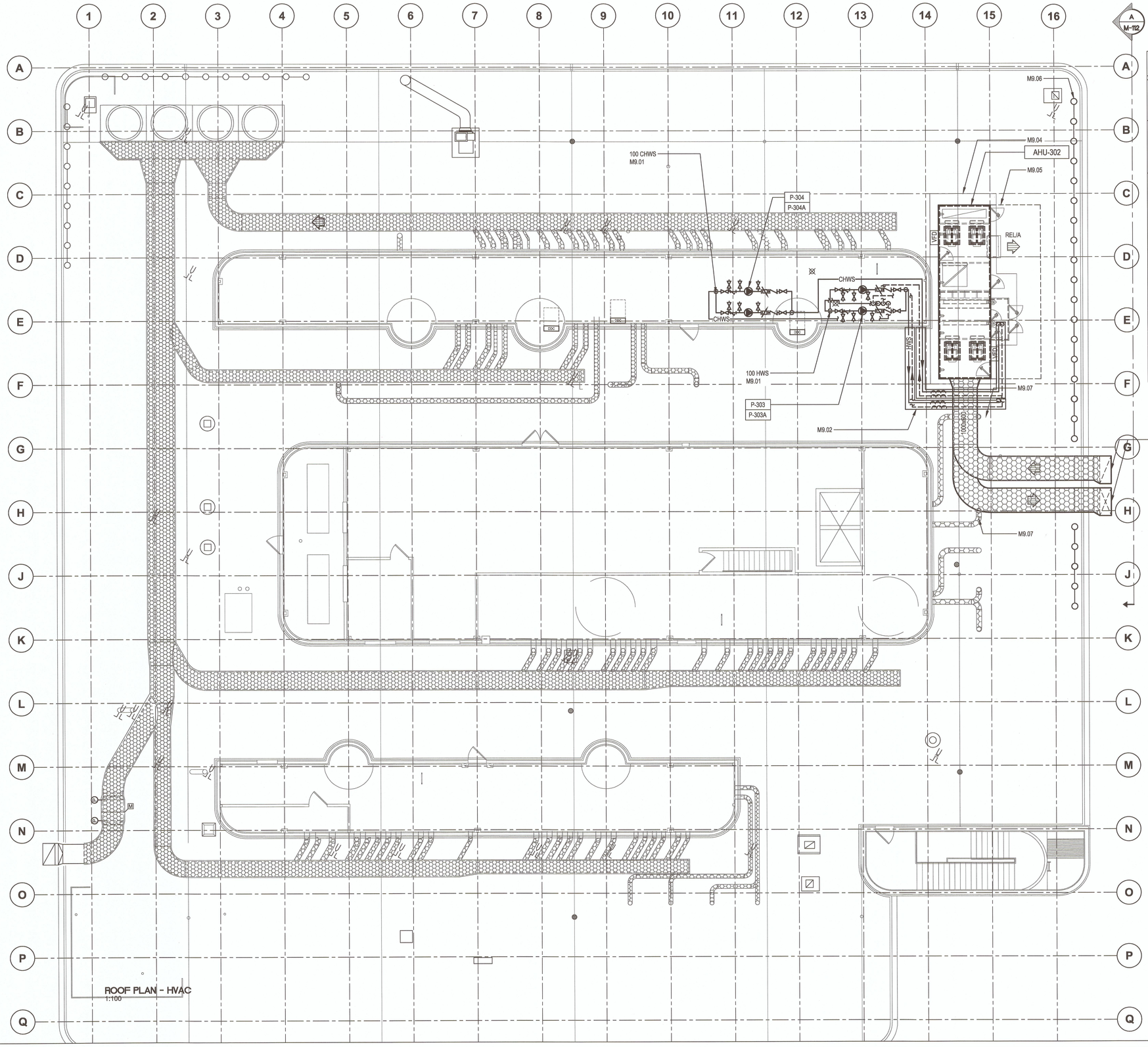

DRAWING M-109 NOTES

M9.01	PROVIDE NEW PUMP STATION MOUNTED ON WALL OF PENTHOUSE. PIPE TO NEAREST FLOOR DRAIN. PIPES SHOWN OFFSET FOR CLARITY. REFER TO M-113 FOR ADDITIONAL DETAILS.
M9.02	PROVIDE HEAT TRACING AND ENCLOSURE FOR HYDRONIC PIPING RUN BELOW AHU-302 DUCT TO PIPING VESTIBULE. PROVIDE 1 ENCLOSURE FOR HWS/R AND 1 ENCLOSURE FOR CHWS/R. HEAT TRACE FOR COLD PIPING TO BE 13 W/m. HEAT TRACE FOR HOT PIPING TO BE 13 W/m.
M9.03	CONNECT 2@ 1000x600 S/A AND R/A DUCTS TO 2@1220X500 S/A AND R/A GOING DOWN THE BUILDING. REFER TO ARCHITECTURAL DRAWINGS. DUCTS TO BE THERMALLY INSULATED AND PROVIDED WITH AN ALUMINIUM JACKET AS PER SPECIFICATION. REFER TO S104 FOR DUCT SUPPORT DETAILS. REFER TO A110 FOR INFORMATION ON ARCHITECTURAL ENCLOSURE.
M9.04	PROVIDE NEW AHU-302. MOUNT ON 100mm CONCRETE PAD 150mm LARGER THAN FOOTPRINT OF THE EQUIPMENT. O/A INTAKE IS FROM ABOVE UNIT. REFER TO S104 AND A111 FOR HOUSEKEEPING PAD DETAIL. REFER TO M-113 FOR UNIT DIMENSIONS AND VALVES/FITTINGS, ETC..
M9.05	MAINTAIN ROOM ON EAST SIDE OF THE AIR HANDLER FOR COIL REMOVAL.
M9.06	PROVIDE NEW GUARDRAIL AS INDICATED.
M9.07	RUN S/A DUCT OVER EXISTING ROOF EXHAUST FAN. NEW DUCT TO BE MINIMUM 914 ABOVE ROOF MEMBRANE.

0 10 20 30 40 50 60 70 80 90 100mm

PWGSC – A1 – 841X594

Public Works and Government Services Canada
Travaux publics et Services gouvernementaux Canada

REAL PROPERTY SERVICES
Pacific Region
SERVICES IMMOBILIERS
Région de Pacifique

PROFESSIONAL ENGINEER
PROVINCE OF BRITISH COLUMBIA
M. MARKOVIC
24829
JUL 13 2017

AREA OF WORK

KEY PLAN
N.T.S

Revision/ Revision	Description/Description	Date/Date
5		
4		
3	ISSUED FOR TENDER	2017-07-13
2	ISSUED FOR 100 % CD	2017-05-09
1	PRE-TENDER CD FOR CLIENT REVIEW	2017-04-05
0	50 % REVIEW	2017-03-03

Client/client
CANADIAN FOOD INSPECTION AGENCY

Project title/Titre du projet
3155 WILLINGDON GREEN
BURNABY, BC

CFIA
AHU REPLACEMENT

Consultant Signature Only

Designed by/Concept par
MM

Drawn by/Dessine par
SE

PWGSC Project Manager/Administrateur de Projets TPSGC

Regional Manager, Architectural and Engineering Services
Gestionnaire régionale, Services d'architectural et de génie, TPSGC

Drawing title/Titre du dessin
ROOF PLAN - MECHANICAL

Project No./No. du projet	Sheet/ Feuille	Revision no./ La Révision no.
39903-150591	M-109 OF 13	3

DM5XXXXXX

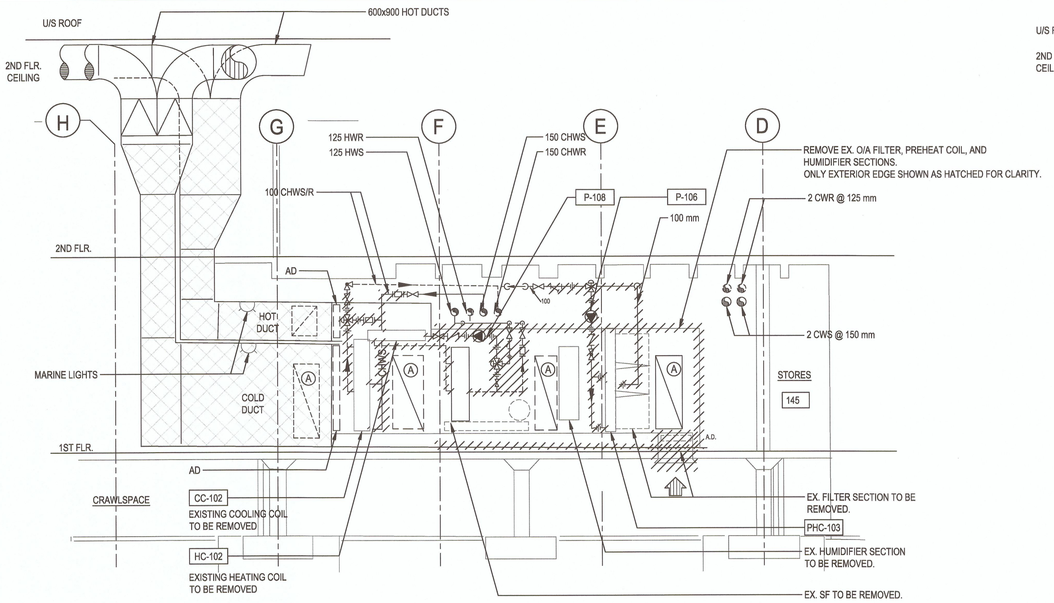

AHU-101/2 DEMOLITION SECTION - MECHANICAL
N.T.S.

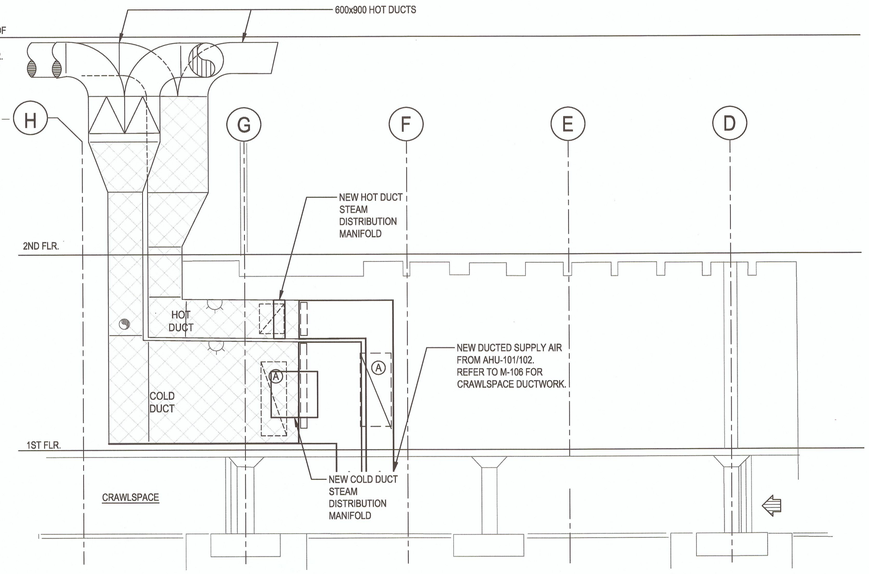

AHU-101/2 SECTION - MECHANICAL
N.T.S.

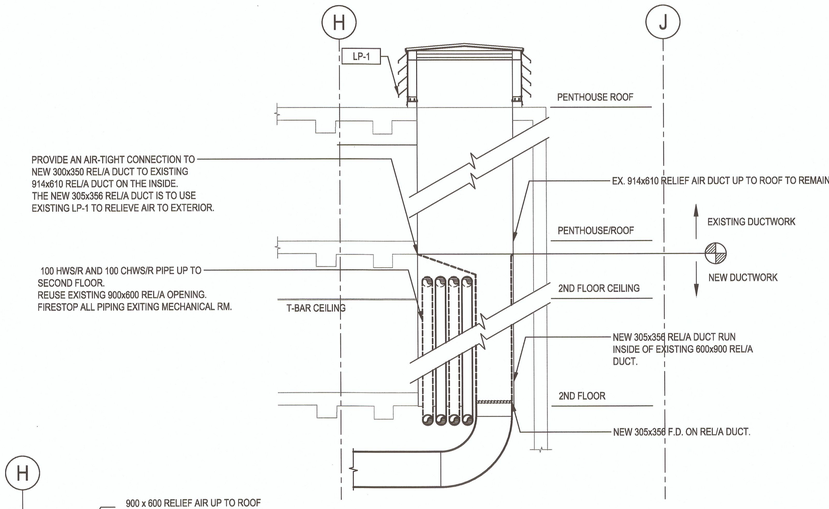

AHU-302 RELIEF AIR DUCT DETAIL
N.T.S.

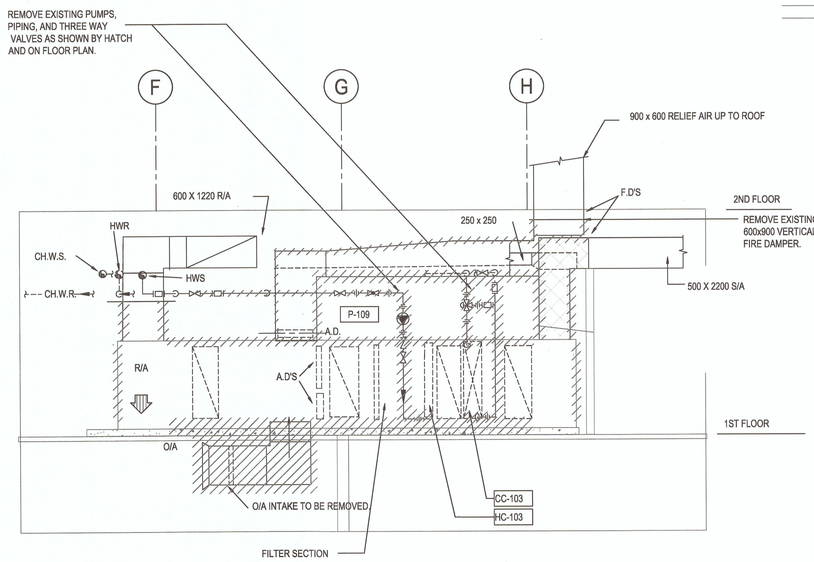

AHU-103 DEMOLITION SECTION - MECHANICAL
N.T.S.

PROFESSIONAL ENGINEER
PROVINCE OF BRITISH COLUMBIA
M. MARKOVIC
24829
ENGINEER
JUL 13 2017

Revision/ Revision	Description/Description	Date/Date
5		
4		
3	ISSUED FOR TENDER	2017-07-13
2	ISSUED FOR 100 % CD	2017-05-09
1	PRE-TENDER CD FOR CLIENT REVIEW	2017-04-05
0	50 % REVIEW	2017-03-03

Client/client
CANADIAN FOOD INSPECTION AGENCY

Project title/Titre du projet
3155 WILLINGDON GREEN BURNABY, BC

CFIA AHU REPLACEMENT

Consultant Signature Only

Designed by/Concept par
MM

Drawn by/Dessine par
SE

PWGSC Project Manager/Administrateur de Projets TPSGC

Regional Manager, Architectural and Engineering Services Gestionnaire régionale, Services d'architectural et de génie, TPSGC

Drawing title/Titre du dessin
SECTIONS - MECHANICAL

Project No./No. du projet	Sheet/ Feuille	Revision no./ La Révision no.
39903-150591	M-110 OF 13	3

PWGSC – A1 – 841X594

0 10 20 30 40 50 60 70 80 90 100mm

DMSXXXXXX

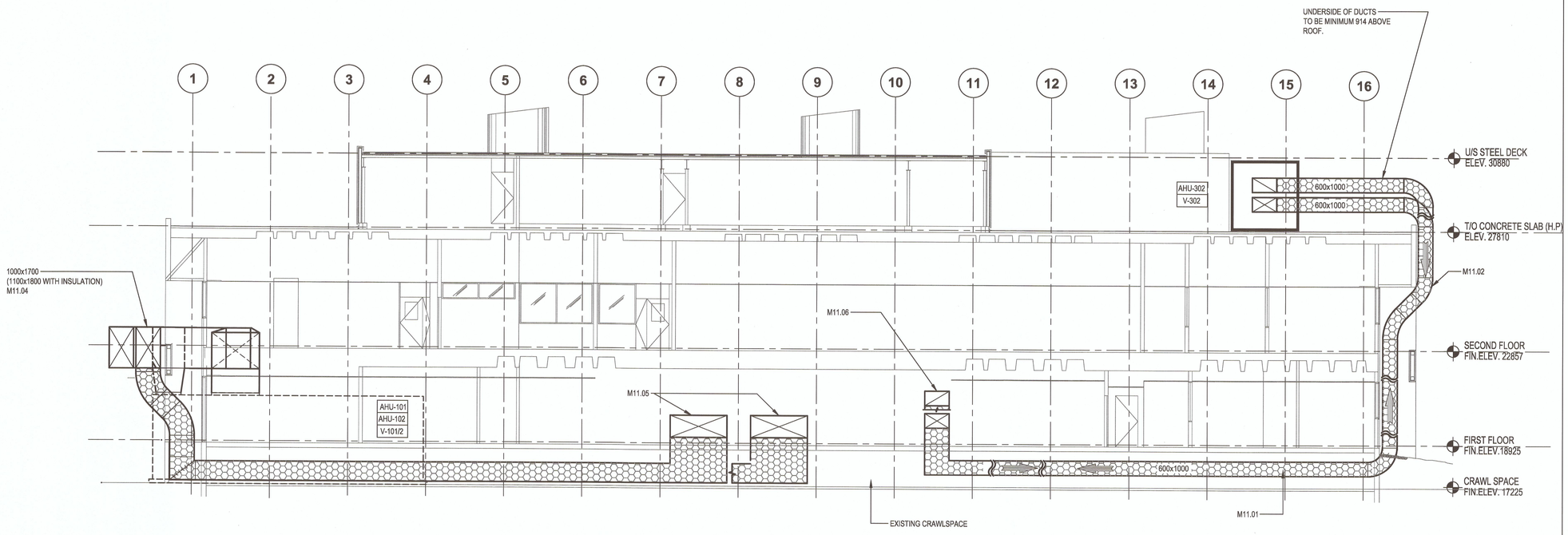

SECTION 1:100 (A / M-111)

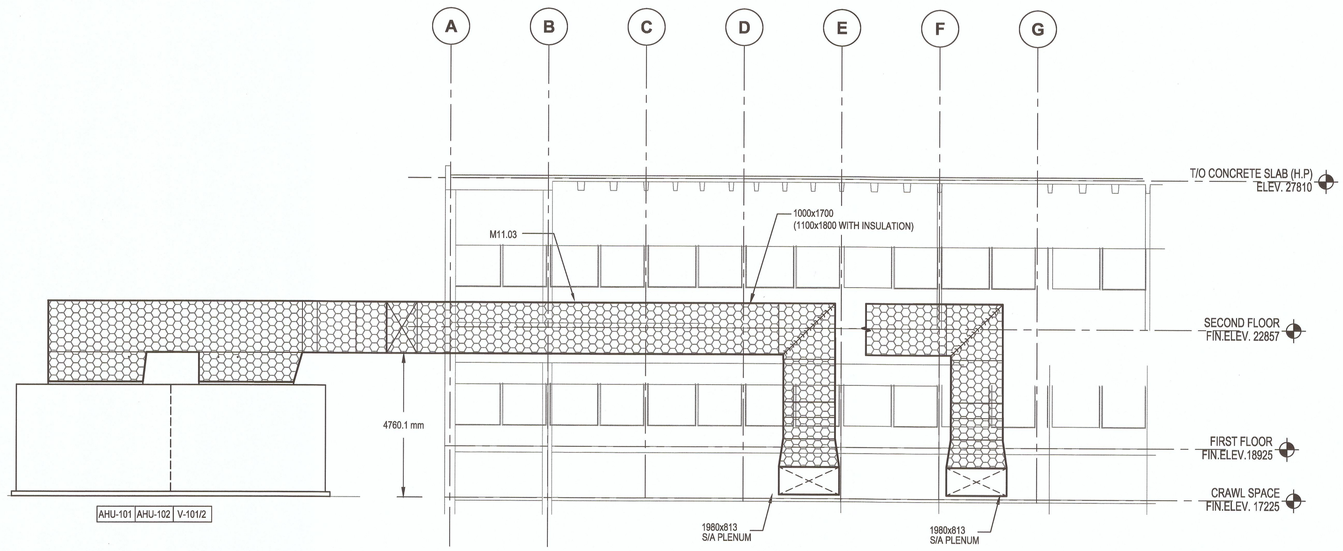

SECTION 1:100 (B / M-111)

DRAWING M-111 NOTES

M11.01	NEW 1000X600 S/A AND 1000X600 R/A UP TO AHU-302 ON THE ROOF.
M11.02	2@ 1220X500 S/A AND R/A. SEE ARCHITECTURAL DRAWING A108.
M11.03	2@ 1000x1700 S/A DUCT. RUN ALONG EXTERIOR OF THE BUILDING BETWEEN WINDOWS. CONNECT TO S/A OUTLETS OF NEW AHU-101/102.
M11.04	RUN S/A DUCT ALONG EXTERIOR BAND OF THE BUILDING. OFFSET INTO THE BUILDING USING A 1980x813 S/A DUCT AND RUN DOWN INTO THE CRAWL SPACE.
M11.05	CONNECTION POINT TO EXISTING S/A TERMINALS FOR EX. AHU-101 AND EX. AHU-102. SEE DWG M-106.
M11.06	CONNECT TO EXISTING S/A AND R/A DUCTS THAT USED TO SERVE EX. AHU-103 SEE M-106 FOR MORE DETAILS.

PWGSC – A1 – 841X594

0 10 20 30 40 50 60 70 80 90 100mm

Public Works and Government Services Canada / Travaux publics et Services gouvernementaux Canada

REAL PROPERTY SERVICES
Pacific Region
SERVICES IMMOBILIERS
Région de Pacifique

PROFESSIONAL ENGINEER PROVINCE OF BRITISH COLUMBIA M. MARKOVIC 24829
JUL 13 2017

Revision/ Revision	Description/Description	Date/Date
5		
4		
3	ISSUED FOR TENDER	2017-07-13
2	ISSUED FOR 100 % CD	2017-05-09
1	PRE-TENDER CD FOR CLIENT REVIEW	2017-04-05
0	50 % REVIEW	2017-03-03

Client/client

CANADIAN FOOD INSPECTION AGENCY

Project title/Titre du projet

3155 WILLINGDON GREEN BURNABY, BC

CFIA AHU REPLACEMENT

Consultant Signature Only

Designed by/Concept par: **MM**

Drawn by/Dessine par: **SE**

PWGSC Project Manager/Administrateur de Projets TPSGC

Regional Manager, Architectural and Engineering Services Gestionnaire régionale, Services d'architectural et de génie, TPSGC

Drawing title/Titre du dessin

SECTIONS AND ELEVATIONS

Project No./No. du projet	Sheet/ Feuille	Revision no./ La Révision no.
39903-150591	M-111 OF 13	3

DM5XXXXXX

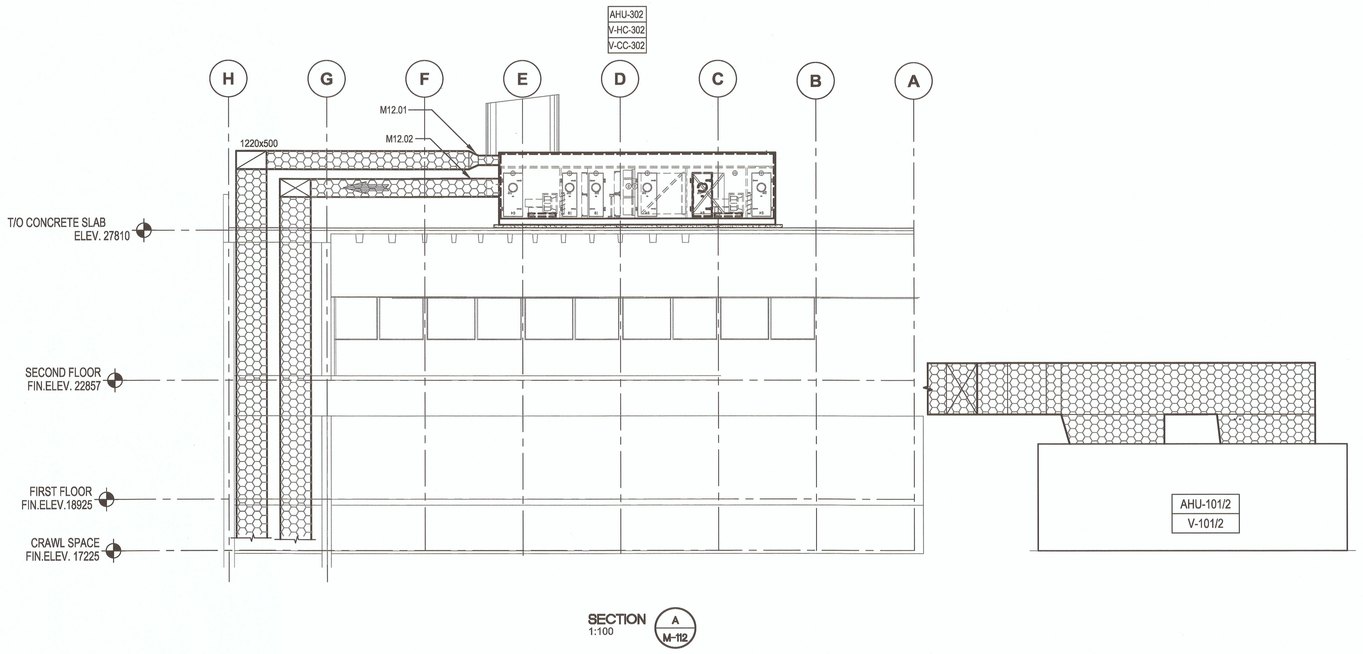

SECTION A M-112
1:100

DRAWING M-112 NOTES

M12.01	CONNECT 1000x600 R/A DUCT TO 2814x604 R/A INPUT ON AHU-302. DUCT TO BE MINIMUM 914 ABOVE ROOF.
M12.02	CONNECT 1000x600 S/A DUCT TO 560x2815 S/A OUTPUT ON AHU-302. DUCT TO BE MINIMUM 914 ABOVE ROOF.

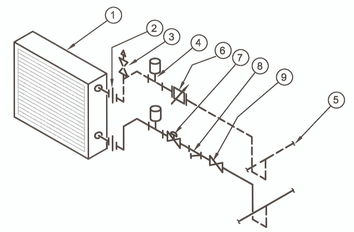

1. COIL
2. UNION
3. AUTOMATIC AIR VENT PIPE TO FLOOR DRAIN
4. PETE'S PLUG
5. MAINS
6. FLOW MEASUREMENT VALVE
7. CONTROL VALVE AS SCHEDULED
8. STRAINER
9. ISOLATION VALVE

ZONE COIL PIPING ABOVE MAINS
N.T.S.

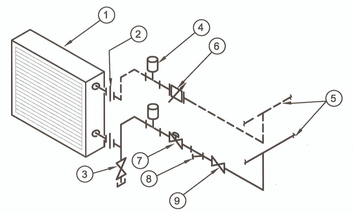

1. COIL
2. UNION
3. DRAIN COCK C/W CAP, CHAIN FASTENED TO PIPING
4. PETE'S PLUG
5. MAINS
6. FLOW MEASUREMENT VALVE
7. CONTROL VALVE AS SCHEDULED
8. STRAINER
9. ISOLATION VALVE

ZONE COIL PIPING BELOW MAINS
N.T.S.

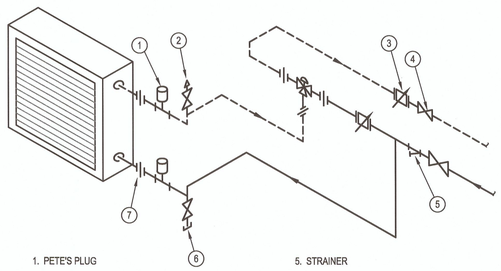

1. PETE'S PLUG
2. AUTOMATIC AIR VENT. IF COIL IS ABOVE MAINS, PIPE TO FLOOR DRAIN
3. FLOW MEASUREMENT VALVE
4. BALL VALVE
5. STRAINER
6. DRAIN COCK C/W CAP, CHAIN FASTENED TO PIPING
7. UNION

A. REFER TO CONTROL VALVE SCHEDULE FOR CAPACITIES
B. REFER TO CONTROL CONTRACTORS SHOP DRAWINGS FOR CONTROL VALVE PIPING ARRANGEMENT.

MIXING VALVE PIPED FOR DIVERTING ACTION
N.T.S.

Public Works and Government Services Canada
Travaux publics et Services gouvernementaux Canada
REAL PROPERTY SERVICES
Pacific Region
SERVICES IMMOBILIERS
Région de Pacifique

PROFESSIONAL ENGINEER — PROVINCE OF BRITISH COLUMBIA — M. MARKOVIC 24829
JUL 13 2017

Revision/ Revision	Description/Description	Date/Date
5		
4		
3	ISSUED FOR TENDER	2017-07-13
2	ISSUED FOR 100 % CD	2017-05-09
1	PRE-TENDER CD FOR CLIENT REVIEW	2017-04-05
0	50 % REVIEW	2017-03-03

Client/client
CANADIAN FOOD INSPECTION AGENCY

Project title/Titre du projet
3155 WILLINGDON GREEN BURNABY, BC

CFIA AHU REPLACEMENT

Consultant Signature Only

Designed by/Concept par
MM

Drawn by/Dessine par
SE

PWGSC Project Manager/Administrateur de Projets TPSGC

Regional Manager, Architectural and Engineering Services / Gestionnaire régional, Services d'architectural et de génie, TPSGC

Drawing title/Titre du dessin
SECTIONS, ELEVATIONS, AND DETAILS

Project No./No. du projet	Sheet/Feuille	Revision no./ La Révision no.
39903-150591	M-112 OF 13	3

PWGSC – A1 – 841X594
0 10 20 30 40 50 60 70 80 90 100mm
DM5XXXXXX

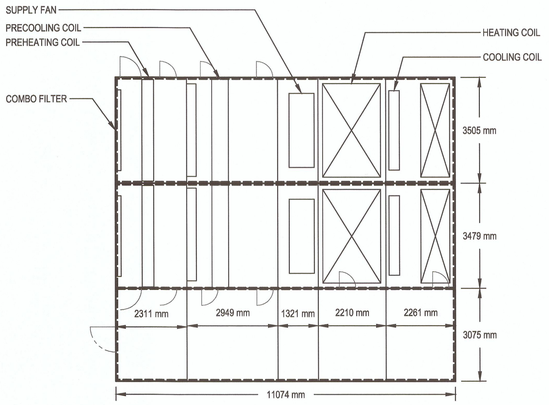

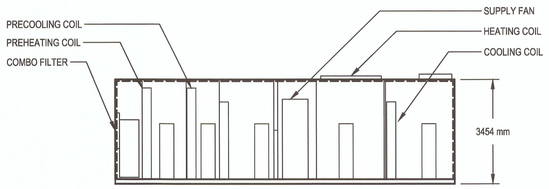

NOTE: **ALL** AIR HANDLING UNIT AHU-101/2 DOORS MUST BE SECURED WITH A KEY LOCK

ROOF SLOPE 1/8"/ft BOTH DIRECTIONS

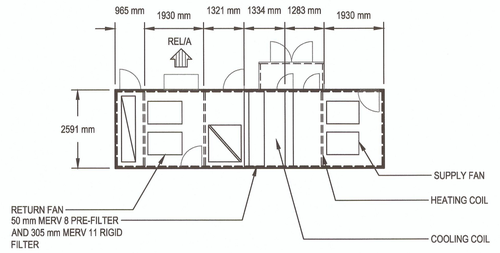

AHU-302
N.T.S.

ROOF SLOPE 1/8"/ft THIS DIRECTION

DRAWING M-113 GENERAL NOTES

1.	1. THE FOLLOWING WORK SHALL BE FURNISHED BY THE MECHANICAL CONTRACTOR UNDER THE SUPERVISION OF THE CONTROLS CONTRACTOR: - SUPPLY AND INSTALLATION OF ACCESS PANELS FOR SERVICE AND INSTALLATION OF CONTROL EQUIPMENT. - INSTALLATION OF AUTOMATIC VALVES, WELLS, FLOW SWITCHES, AND OTHER PIPE RELATED CONTROL DEVICES.
2.	WATER TEMPERATURE SENSOR LOCATIONS ARE SHOWN FOR REFERENCE ONLY. CONTROLS CONTRACTOR SHALL REFER TO SPECIFICATIONS FOR ADDITIONAL SENSORS WHERE REQUIRED.
3.	CONTRACTOR TO PROVIDE FOR REVIEW DETAILED SKETCH WITH PROPOSED FIRST FLOOR MECHANICAL ROOM PIPING LAYOUT PRIOR TO PROCEEDING WITH INSTALLATION.
4.	REFER TO PIPING SCHEMATIC, DETAILS, AND SPECIFICATIONS FOR TYPICAL PIPING REQUIREMENTS. TYPICAL FOR ALL VERTICAL INLINE PUMPS, PROVIDE FLEXIBLE CONNECTIONS AND FLOOR MOUNTED SUPPORT FRAMES. MAINTAIN ADEQUATE ACCESS AND SERVICE CLEARANCES FOR ALL EQUIPMENT AS PER THE MANUFACTURERS' RECOMMENDATIONS. PROVIDE ADEQUATE SERVICE CLEARANCE FOR ALL EQUIPMENT.

AHU-101/102
N.T.S.

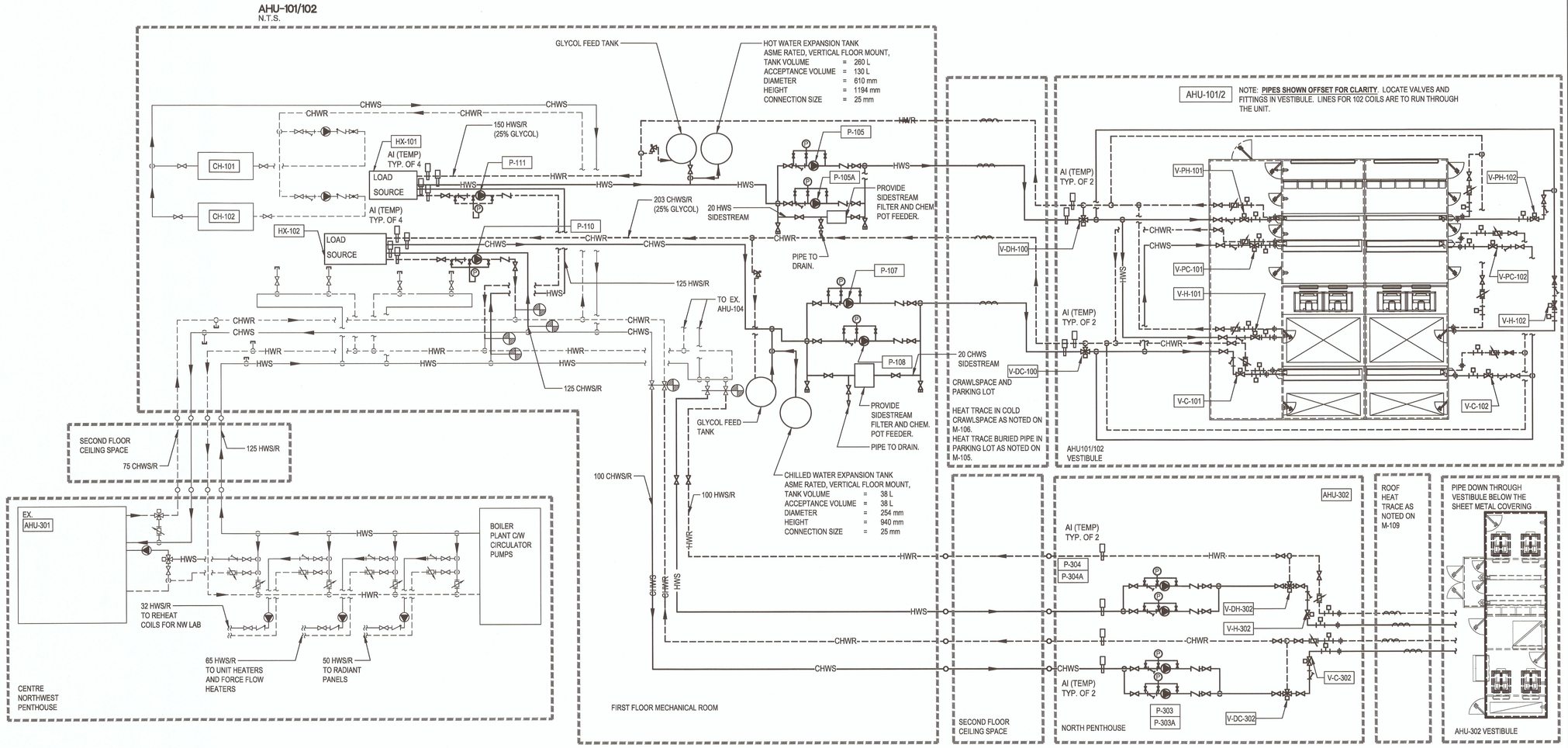

HYDRONIC SCHEMATIC
N.T.S.

Public Works and Government Services Canada
Travaux publics et Services gouvernementaux Canada
REAL PROPERTY SERVICES
Pacific Region
SERVICES IMMOBILIERS
Région de Pacifique

PROFESSIONAL ENGINEER PROVINCE OF BRITISH COLUMBIA M. MARKOVIC 24829
JUL 13 2017

Revision/ Revision	Description/Description	Date/Date
5		
4		
3	ISSUED FOR TENDER	2017-07-13
2	ISSUED FOR 100 % CD	2017-05-09
1	PRE-TENDER CD FOR CLIENT REVIEW	2017-04-05
0	50 % REVIEW	2017-03-03

Client/client
CANADIAN FOOD INSPECTION AGENCY

Project title/Titre du projet
3155 WILLINGDON GREEN BURNABY, BC

CFIA AHU REPLACEMENT

Consultant Signature Only

Designed by/Concept par
MM

Drawn by/Dessine par
SE

PWGSC Project Manager/Administrateur de Projets TPSGC

Regional Manager, Architectural and Engineering Services Gestionnaire régional, Services d'architectural et de génie, TPSGC

Drawing title/Titre du dessin
AIR HANDLING UNIT DETAILS AND HYDRONIC SCHEMATIC

Project No./No. du projet	Sheet/Feuille	Revision no./ La Révision no.
39903-150591	M-113 OF 13	3

CANADIAN FOOD INSPECTION AGENCY

EXHAUST MANIFOLD SYSTEM

CFIA BURNABY EXHAUST FANS

TAG	REMOVE OR REMAIN	LOCATION	INLET DUCT SIZE (mm)
EF-1	REMOVE	North Penthouse	279 Ø
EF-2	REMOVE	North Penthouse	279 Ø
EF-3	REMAIN	Roof - North	508 Ø
EF-4	REMOVE	Ceiling Space	N/A
EF-5A	REMOVE	Roof - South West	610 Ø
EF-5B	REMOVE	Roof- South West	610 Ø
EF-6	REMOVE	South Penthouse	229 Ø
EF-7	REMOVE	South Penthouse	229 Ø
EF-8	REMAIN	Centre Penthouse - NorthWest	406 Ø
EF-9	REMOVE	South Penthouse	229 Ø
EF-10	REMOVE	South Penthouse	229 Ø
EF-11	REMAIN	Centre Penthouse - NorthWest	457x356
EF-301	REMOVE	North Penthouse	457 Ø
EF-302	REMOVE	North Penthouse	356 Ø
EF-303	REMOVE	North Penthouse	254 Ø
EF-304	REMOVE	North Penthouse	254 Ø
EF-305	REMOVE	North Penthouse	254 Ø
EF-306	REMOVE	North Penthouse	254 Ø
EF-307	REMOVE	North Penthouse	254 Ø
EF-308	REMOVE	North Penthouse	254 Ø
EF-309	REMOVE	North Penthouse	356 Ø
EF-310	REMOVE	North Penthouse	356 Ø
EF-311	REMOVE	North Penthouse	254 Ø
EF-312	REMOVE	North Penthouse	254 Ø
EF-313	REMOVE	North Penthouse	254 Ø
EF-314	REMOVE	North Penthouse	254 Ø
EF-315	REMOVE	North Penthouse	254 Ø
EF-316	REMOVE	North Penthouse	254 Ø
EF-317	REMOVE	North Penthouse	254 Ø
EF-318	REMOVE	North Penthouse	254 Ø
EF-319	REMOVE	Centre Penthouse - SouthEastEast	254 Ø
EF-320	REMOVE	Centre Penthouse - SouthEast	254 Ø
EF-321	REMOVE	Centre Penthouse - SouthEast	254 Ø
EF-322	REMOVE	Centre Penthouse - SouthEast	254 Ø
EF-323	REMOVE	Centre Penthouse - SouthEast	254 Ø
EF-324	REMOVE	Centre Penthouse - SouthEast	254 Ø
EF-325	REMOVE	Centre Penthouse - SouthEast	254 Ø
EF-326	REMOVE	Centre Penthouse - SouthEast	254 Ø
EF-327	REMOVE	Centre Penthouse - SouthEast	254 Ø
EF-328	REMOVE	Centre Penthouse - SouthEast	254 Ø
EF-329	REMOVE	Centre Penthouse - SouthEast	254 Ø
EF-330	REMOVE	Centre Penthouse - SouthEast	254 Ø
EF-331	REMOVE	South Penthouse	254 Ø
EF-332	REMOVE	South Penthouse	254 Ø
EF-333	REMOVE	South Penthouse	254 Ø
EF-334	REMOVE	South Penthouse	254 Ø
EF-335	REMOVE	South Penthouse	203 Ø
EF-336	REMOVE	South Penthouse	254 Ø
EF-337	REMOVE	South Penthouse	254 Ø
EF-338	REMOVE	South Penthouse	254 Ø
EF-339	REMOVE	South Penthouse	203 Ø
EF-340	REMOVE	South Penthouse	254 Ø

CFIA BURNABY EXHAUST FANS

TAG	REMOVE OR REMAIN	LOCATION	INLET DUCT SIZE (mm)
EF-341	REMAIN	Centre Penthouse - NorthWest	356x356
EF-342	REMAIN	Centre Penthouse - NorthWest	610x305
EF-343	REMAIN	Centre Penthouse - NorthWest	254x254
EF-344	REMOVE	Centre Penthouse - NorthWest	N/A
EF-345	REMOVE	Centre Penthouse - SouthEast	203 Ø
EF-346	REMOVE	Centre Penthouse - SouthEast	203 Ø
EF-347	REMOVE	Centre Penthouse - SouthEast	305 Ø
EF-348	REMOVE	Centre Penthouse - NorthWest	305x305
EF-349	REMOVE	Centre Penthouse - NorthWest	356x254
EF-350	REMOVE	Centre Penthouse - NorthWest	254x254
EF-351	REMOVE	Centre Penthouse - NorthWest	152x152
EF-352	REMOVE	Centre Penthouse - NorthWest	406x356
EF-353	REMOVE	Centre Penthouse - NorthWest	305x203
EF-354	REMOVE	Centre Penthouse - NorthWest	356x203
EF-355	REMOVE	Centre Penthouse - NorthWest	203x152
EF-356	REMOVE	Centre Penthouse - NorthWest	356x203
EF-357	REMOVE	South Penthouse	325x254
EF-358	REMOVE	South Penthouse	325x254
EF-359	REMAIN	North Penthouse	Free inlet
EF-360	REMAIN	Centre Penthouse - SouthEast	Free inlet
EF-361	REMAIN	South Penthouse	Free inlet
EF-362	REMAIN	Roof - North West	406x406
EF-363	REMAIN	Roof - North East	406x406
EF-364	REMAIN	Roof - West	287x287
EF-365	REMOVE	Roof - Centre	254 Ø
EF-366	REMOVE	Roof - North	254 Ø
EF-367	REMOVE	Roof - Centre	254 Ø
EF-368	REMOVE	Roof - Centre	75 Ø
EF-369	REMOVE	North Penthouse	356x305
EF-370	REMOVE	Roof - East	152x152
EF-371	REMAIN	Roof- West	287x287
EF-372	REMOVE	Roof - East	203 Ø
EF-373	REMOVE	Roof - East	203 Ø
EF-374	REMOVE	Roof - East	152 Ø
EF-375	REMOVE	Roof - East	152 Ø
EF-376	REMOVE	Roof - South East	203x203
EF-377	REMOVE	Roof - South East	203x203
EF-378	REMOVE	Roof - South East	152x152
EF-379	REMOVE	Roof - South East	152 Ø
EF-380	REMAIN	Roof - South East	575x575
EF-381	REMAIN	Roof - South East	406x406
EF-382	REMAIN	Roof - West	305x203
EF-383	REMOVE	North Penthouse	152 Ø
EF-384	REMOVE	North Penthouse	100 Ø
EF-385	REMOVE	North Penthouse	254 Ø
EF-387	REMAIN	Roof - South East	N/A

HVAC LEGEND

SYMBOL	DESCRIPTION
	EX. DUCTWORK
	DUCTWORK
	EX. FLEXIBLE DUCTWORK
	FLEXIBLE DUCTWORK
	SUPPLY DUCT RISER/SECTION
	RETURN/EXHAUST DUCT RISER/SECTION
	OUTDOOR AIR DUCT RISER/SECTION
R	DUCT RISE
D	DUCT DROP
	ROUND DUCT RISER
	ROUND DUCT DROP
	SUPPLY AIRFLOW DIRECTION
	RETURN/EXHAUST AIRFLOW DIRECTION
	AIRFLOW DIRECTION
	VOLUME DAMPER
	FIRE DAMPER IN VERTICAL SEPERATION
	FIRE DAMPER IN HORIZONTAL SEPERATION
X	DOOR GRILLE (SIZE AS SCHEDULED)
XXXX	EQUIPMENT TAG
	POINT OF DISCONNECTION
	POINT OF CONNECTION
NO.@ TYPE U/S SIZE	AIR DISTRIBUTION TAG
COND	CONDENSATE DRAIN LINE
	DEMOLITION
	50 mm THERMAL INSULATION

ABBREVIATION

ABBREV.	DESCRIPTION
AHU	AIR HANDLING UNIT
B/W	BETWEEN
C/W	COMPLETE WITH
CT	COOLING TOWER
EA, E/A	EXHAUST AIR
EF	EXHAUST FAN
EX.	EXISTING
FD	FLOOR DRAIN
FEF	FUME EXHAUST FILTER
FES	FUME EXHAUST SCRUBBER
HRC	HEAT RECOVERY COIL
NA, N/A	NOT AVAILABLE/NOT APPLICABLE
NTS	NOT TO SCALE
PDEF	PLUME DILUTION EXHAUST FAN
RA, R/A	RETURN AIR
REL	RELIEF
SA, S/A	SUPPLY AIR
SF	SUPPLY FAN
STOR.	STORAGE
SOLV.	SOLVENT
UH	UNIT HEATER

PHASING REQUIREMENTS

ALL EXTERIOR EQUIPMENT AND DUCTWORK IS TO BE INSTALLED PRIOR TO COMMENCEMENT OF ANY WORK IN THE PENTHOUSES.

ALL PENTHOUSE PENETRATIONS ARE TO BE CORED AND MADE WATERTIGHT PRIOR TO COMMENCEMENT OF ANY WORK IN THE PENTHOUSES. CONNECTIONS ARE TO BE CAPPED UNTIL SUCH TIME AS REQUIRED FOR CONNECTION.

AFTER EACH CONSTANT VOLUME AIR VALVE IS INSTALLED THE BALANCING DAMPER ON THE RESPECTIVE MAIN LINE IS TO BE BALANCED AS REQUIRED TO MAINTAIN MINIMUM EXHAUST VELOCITY IN MAIN EXHAUST DUCT. IN ADDITION, THE ASSOCIATED FUMEHOOD IS TO BE COMMISSIONED AS REQUIRED.

NO DEMOLITION OF EXHAUST FANS IS TO TAKE PLACE UNTIL THE STROBIC UNIT HAS BEEN PRE-TESTED AND PRE-COMMISSIONED.

DUCTING, CONTROLS, REQUIRED DEMOLITION, ETC FOR EF-5A/EF-5B STREAM SHOULD BE INSTALLED PRIOR TO COMMENCEMENT OF ANY WORK IN THE PENTHOUSES.

FOR DETAILS ON THE PHASING REQUIREMENTS RELATING TO REMOVAL OF INDIVIDUAL EXHAUST FANS, REFER TO ARCHITECTURAL DRAWINGS, A202 & A203. IT IS MANDATORY TO STRICTLY FOLLOW THE ARCHITECTURAL PHASING PLAN AS IT RELATES TO THE SCOPE OF WORK DESCRIBED HEREIN AND IN THE SPECIFICATION. I.E. SELECT HOODS MAY NOT BE NON-OPERATIONAL AT THE SAME TIME/SELECT HOODS MAY ONLY BE DOWN FOR A SET PERIOD OF TIME. INFORMATION ON HOOD/CANOPY SERVICE FOR EXHAUST FANS CAN BE FOUND ON SHEETS M-202, M-204, M-206, M-208, AND M-210 FOR USE IN CONJUNCTION WITH THE INFORMATION PROVIDED ON THE ARCHITECTURAL DRAWINGS NOTED ABOVE.

GENERAL NOTES

1. ALL NEW WORK SHALL BE INSTALLED IN PARALLEL WITH EXISTING SYSTEMS (WHEN FEASIBLE) TO MINIMIZE DURATION OF SHUT-DOWNS. SHUT-DOWNS OF ANY AREAS WILL NEED TO BE COORDINATED AND APPROVED AHEAD OF TIME, IN COORDINATION WITH THE DEPARTMENTAL REPRESENTATIVE. REFER TO ARCHITECTURAL DRAWINGS FOR MAXIMUM ALLOWABLE SHUTDOWN PERIODS.
2. ALL NEW WORK SHALL BE TESTED, BALANCED (AS NECESSARY), AND COMMISSIONED.
3. THE CONTRACTOR IS RESPONSIBLE FOR REVIEWING AND VERIFYING ACTUAL ONSITE CONDITIONS AND EQUIPMENT LOCATIONS PRIOR TO ANY AND ALL DEMOLITION WORK AND/OR EQUIPMENT REMOVAL.
4. FOR CLARITY, THE MECHANICAL PLANS DO NOT ATTEMPT TO SHOW ALL REQUIRED OFFSETS. THE CONTRACTOR IS TO ALLOW FOR OFFSETS AS PART OF CONTRACT PRICING. EXISTING CONDITIONS AND PIPE ROUTING TO BE REVIEWED WITH TENDER.
5. THE DRAWINGS & SPECIFICATIONS ARE TO BE REVIEWED, EVALUATED, AND IMPLEMENTED CONCURRENTLY. IN CASES WHERE CONFLICTS OCCUR, THE MOST STRINGENT REQUIREMENTS SHALL APPLY.
6. THE CONTRACTOR SHALL COORDINATE ALL MECHANICAL WORK WITH THAT OF OTHER TRADES TO ENSURE PROPER AND ADEQUATE INTERFACE WITH THE WORK OUTLINED FOR THIS PROJECT.
7. THE CONTRACTOR SHALL PROVIDE NEC (NATIONAL ELECTRICAL CODE) CLEARANCE HORIZONTAL AND VERTICAL REQUIREMENTS FOR ALL INSTALLED EQUIPMENT. OFFSET MECHANICAL SYSTEMS AS REQUIRED TO MEET THE SITE CONDITIONS AS SHOWN ON THE DRAWINGS & DESCRIBED IN THE SPECIFICATIONS.
8. CONTRACTOR SHALL INCLUDE, AS A PART OF THE BID, ALL COSTS ASSOCIATED WITH CUTTING AND PATCHING RELATED TO THE INSTALLATION OF ALL NEW MECHANICAL SYSTEMS. PATCHING SHALL MATCH, OR EXCEED, THE AESTHETIC CONDITIONS WHICH EXISTED PRIOR TO ANY CUTTING BEING PERFORMED.
9. DURING REMOVAL OF ITEMS SO INDICATED, CAUTION SHOULD BE USED TO PREVENT DAMAGE TO ANY EQUIPMENT HAVING SALVAGE VALUE. ALL REUSABLE SALVAGED MATERIAL SHALL REMAIN THE PROPERTY OF THE OWNER AND BE RETAINED FOR THEIR INSPECTION. ONLY ITEMS AGREED BY THE DEPARTMENTAL REPRESENTATIVE SHALL BE DISPOSED OF BY THE CONTRACTOR.
10. THE INSTALLING CONTRACTOR SHALL PROVIDE SEISMIC PIPE/DUCT SUPPORTS WITH A STRUCTURAL ENGINEERING STAMP AS REQUIRED BY THE NATIONAL BUILDING CODE (2015).
11. THE CONTRACTOR SHALL X-RAY FLOOR SLABS PRIOR TO CORING. THE CONTRACTOR IS TO AVOID ANY IN SLAB IMBEDDED OBJECTS.
12. PROVIDE VALVE IDENTIFICATION TAGS AND SECURE THOSE USING NON-FERROUS CHAIN BRADED BAND OR PLASTIC BAND (SUITABLE FOR TEMPERATURE). TAGS MAY BE OF BRASS, ALUMINUM, METAL PHOTO, LAMICOID OR FIBERGLASS, STAMPED OR ENGRAVED. OF 25mm MINIMUM DIAMETER. VALVES TO BE TAGGED ON ALL MAIN AND BRANCH LINES.
13. ALL EXPOSED DUCTWORK ON THE ROOF TO BE THERMALLY INSULATED WITH 50 mm THICK INSULATION AND PROVIDED WITH ALUMINUM JACKETING PER SPECIFICATION. JACKETING TO BE SEALED WITH POLYURETHANE CAULKING.
14. REFER TO ARCHITECTURAL DRAWING A214 FOR DETAILS RELATING TO DEMOLITION OF EXHAUST STACKS.
15. REFER TO ARCHITECTURAL DRAWING A214 FOR DETAILS ON NEW ROOFTOP DUCTWORK CONNECTIONS
16. REFER TO ARCHITECTURAL DRAWINGS A214 AND A215 AND STRUCTURAL DRAWING S202 FOR DETAILS ON DUCT AND PLENUM SUPPORTS AND DUCT PENETRATIONS THROUGH WALLS.
17. ALL EXISTING EQUIPMENT IN PENTHOUSES IS TO REMAIN UNLESS OTHERWISE NOTED.
18. DUCT LINER, IN ANY FORM, IS UNACCEPTABLE FOR THIS PROJECT. NO DUCT LINER IS TO BE USED.

DRAWING LIST

M-201	EXISTING EXHAUST FAN INFORMATION, MECHANICAL LEGEND, GENERAL NOTES, AND DRAWING LIST
M-202	ROOF PLAN - DEMOLITION
M-203	ROOF PLAN - NEW CONSTRUCTION
M-204	NORTH PENTHOUSE AND PARTIAL ROOF PLAN - DEMOLITION
M-205	NORTH PENTHOUSE AND PARTIAL ROOF PLAN - NEW CONSTRUCTION
M-206	CENTRE PENTHOUSE SOUTHEAST AND PARTIAL ROOF PLAN - DEMOLITION
M-207	CENTRE PENTHOUSE SOUTHEAST AND PARTIAL ROOF PLAN - NEW CONSTRUCTION
M-208	CENTRE PENTHOUSE NORTHWEST AND PARTIAL ROOF PLAN - DEMOLITION
M-209	CENTRE PENTHOUSE NORTHWEST AND PARTIAL ROOF PLAN - NEW CONSTRUCTION
M-210	SOUTH PENTHOUSE AND PARTIAL ROOF PLAN - DEMOLITION
M-211	SOUTH PENTHOUSE AND PARTIAL ROOF PLAN - NEW CONSTRUCTION
M-212	TYPICAL INSTALLATION DETAILS

Public Works and Government Services Canada / Travaux publics et Services gouvernementaux Canada

REAL PROPERTY SERVICES
Pacific Region
SERVICES IMMOBILIERS
Région de Pacifique

PROFESSIONAL ENGINEER — PROVINCE OF BRITISH COLUMBIA — M. MARKOVIC 24829 — JUL 13 2017

Revision/ Revision	Description/Description	Date/Date
5		
4		
3	ISSUED FOR TENDER	2017-07-13
2	ISSUED FOR 100 % CD	2017-05-09
1	PRE-TENDER CD FOR CLIENT REVIEW	2017-04-05
0	50 % REVIEW	2017-03-03

Client/client

CANADIAN FOOD INSPECTION AGENCY

Project title/Titre du projet

3155 WILLINGDON GREEN BURNABY, BC

CFIA EXHAUST MANIFOLD SYSTEM

Consultant Signature Only

Designed by/Concept par: **MM**

Drawn by/Dessine par: **SE**

PWGSC Project Manager/Administrateur de Projets TPSGC

Regional Manager, Architectural and Engineering Services / Gestionnaire régionale, Services d'architectural et de génie, TPSGC

Drawing title/Titre du dessin

EXISTING EXHAUST FAN INFORMATION, MECHANICAL LEGEND, GENERAL NOTES, AND DRAWING LIST

Project No./No. du projet	Sheet/ Feuille	Revision no./ La Révision no.
39903-150591	M-201 OF 12	3

PWGSC – A1 – 841X594

0 10 20 30 40 50 60 70 80 90 100mm

DM5XXXXXX

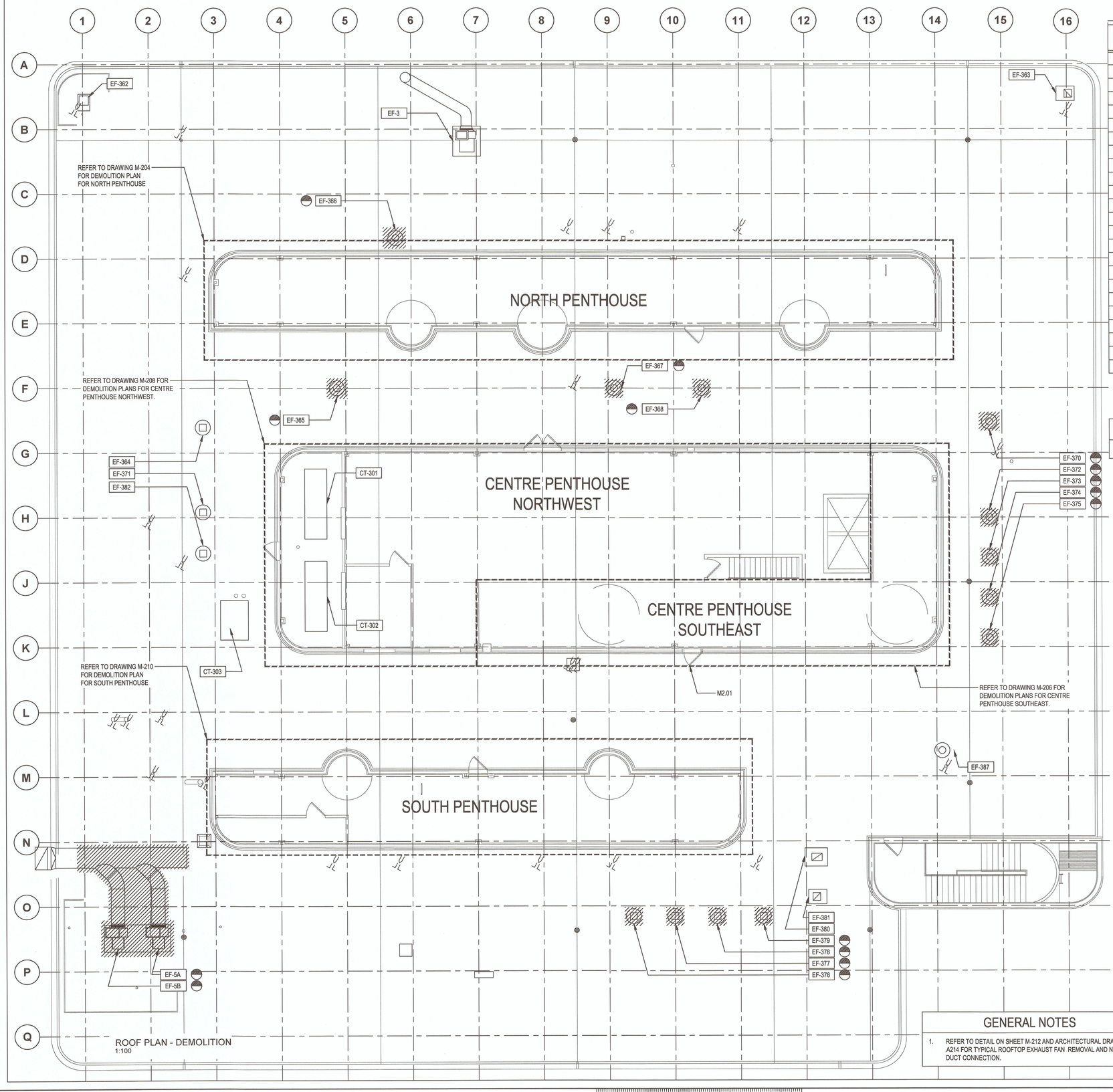

EXISTING ROOFTOP MOUNTED EXHAUST FANS

TAG	REMOVE OR REMAIN	HOOD/CANOPY SERVICED	INLET DUCT SIZE (mm)
EF-3	REMAIN	N/A	508 Ø
EF-5A	REMOVE	N/A	610 Ø
EF-5B	REMOVE	N/A	610 Ø
EF-362	REMAIN	N/A	406x406
EF-363	REMAIN	N/A	406x406
EF-364	REMAIN	N/A	287x287
EF-365	REMOVE	N/A	254 Ø
EF-366	REMOVE	N/A	254 Ø
EF-367	REMOVE	N/A	254 Ø
EF-368	REMOVE	N/A	75 Ø
EF-370	REMOVE	N/A	152x152
EF-371	REMAIN	N/A	287x287
EF-372	REMOVE	N/A	203 Ø
EF-373	REMOVE	N/A	203 Ø
EF-374	REMOVE	N/A	152 Ø
EF-375	REMOVE	N/A	152 Ø
EF-376	REMOVE	N/A	203x203
EF-377	REMOVE	N/A	203x203
EF-378	REMOVE	N/A	152x152
EF-379	REMOVE	N/A	152 Ø
EF-380	REMAIN	N/A	575x575
EF-381	REMAIN	N/A	406x406
EF-382	REMAIN	N/A	305x203
EF-387	REMAIN	N/A	N/A

DRAWING M-202 NOTES

M2.01 RELOCATE EXISTING DOOR. REFER TO ARCHITECTURAL DRAWING A207.

GENERAL NOTES

1. REFER TO DETAIL ON SHEET M-212 AND ARCHITECTURAL DRAWING A214 FOR TYPICAL ROOFTOP EXHAUST FAN REMOVAL AND NEW DUCT CONNECTION.

PWGSC – A1 – 841X594

0 10 20 30 40 50 60 70 80 90 100mm

Public Works and Government Services Canada / Travaux publics et Services gouvernementaux Canada

REAL PROPERTY SERVICES
Pacific Region
SERVICES IMMOBILIERS
Région de Pacifique

PROFESSIONAL ENGINEER
PROVINCE OF BRITISH COLUMBIA
M. MARKOVIC
24829
JUL 13 2017

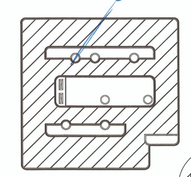

KEY PLAN
N.T.S.

Revision/ Révision	Description/Description	Date/Date
5		
4		
3	ISSUED FOR TENDER	2017-07-13
2	ISSUED FOR 100 % CD	2017-05-09
1	PRE-TENDER CD FOR CLIENT REVIEW	2017-04-05
0	50 % REVIEW	2017-03-03

Client/client
CANADIAN FOOD INSPECTION AGENCY

Project title/Titre du projet
3155 WILLINGDON GREEN
BURNABY, BC

CFIA
EXHAUST MANIFOLD SYSTEM

Consultant Signature Only

Designed by/Concept par
MM

Drawn by/Dessiné par
SE

PWGSC Project Manager/Administrateur de Projets TPSGC

Regional Manager, Architectural and Engineering Services
Gestionnaire régionale, Services d'architectural et de génie, TPSGC

Drawing title/Titre du dessin
ROOF PLAN - DEMOLITION

Project No./No. du projet	Sheet/ Feuille	Revision no./ La Révision no.
39903-150591	M-202 OF 12	3

DM5XXXXXX

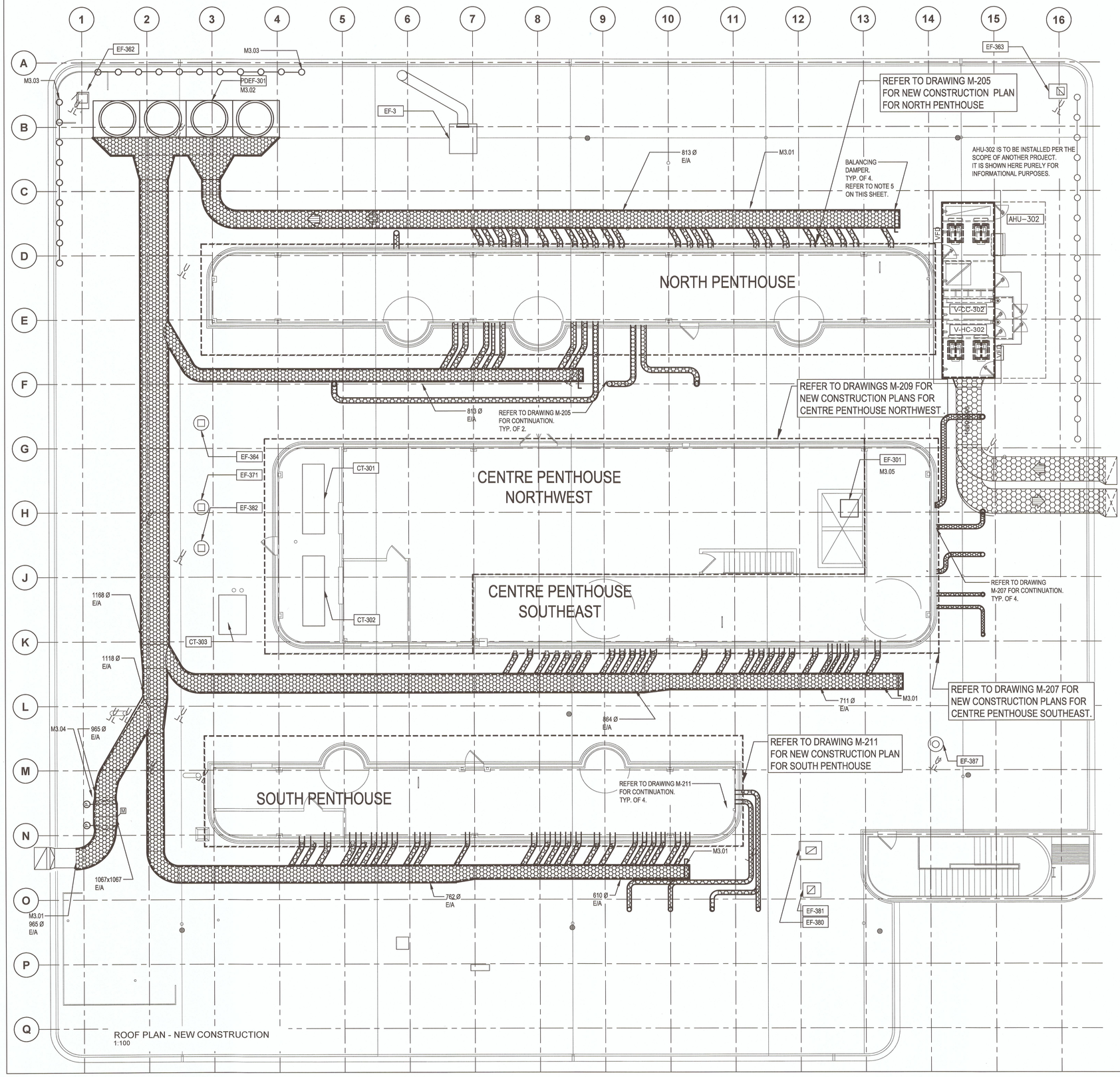

ROOF PLAN - NEW CONSTRUCTION
1:100

GENERAL NOTES

1. PROVIDE CONDENSATE DRAIN LINE FROM PDEF PLENUM TO ACID WASTE DRAIN LINE. REFER TO SHEET M-212 FOR TYPICAL DRAIN CONNECTION. PIPE LINE TO EXISTING FLOOR DRAIN IN PENTHOUSE AS INDICATED.
2. REFER TO STRUCTURAL (S202) AND ARCHITECTURAL DRAWINGS (A214 AND A215) FOR DUCT SUPPORT ON THE ROOF. MECHANICAL CONTRACTOR IS TO PROVIDE STRUT CHANNEL DUCT SUPPORT AS REQUIRED.
3. REFER TO DETAIL ON SHEET M-212 AND ARCHITECTURAL DRAWING A214 FOR TYPICAL ROOFTOP EXHAUST FAN REMOVAL AND NEW DUCT CONNECTION.
4. ALL EXPOSED DUCTWORK ON THE ROOF TO BE THERMALLY INSULATED WITH 50 mm THICK INSULATION AND PROVIDED WITH ALUMINUM JACKETING PER SPECIFICATION. JACKETING TO BE SEALED WITH POLYURETHANE CAULKING.
5. ALL MANIFOLD DUCTS ARE TO HAVE BALANCING DAMPERS INSTALLED AFTER THE FINAL BRANCH DUCT ENTERS AS NOTED ON THE DRAWING. BALANCING DAMPERS ARE TO BE USED FOR BALANCING DURING THE CONSTRUCTION PROCESS.

ROOFTOP EQUIPMENT TO REMAIN

EQUIPMENT TAG
EF-3
EF-362
EF-363
EF-364
EF-371
EF-380
EF-381
EF-382
EF-387

DRAWING M-203 NOTES

M3.01 EXPOSED DUCT TO BE RUN MINIMUM 610 mm ABOVE FINISHED ROOF. REFER TO GENERAL NOTE 4 AND SPECIFICATION FOR DETAILS ON INSULATION.

M3.02 NEW PLUME DILUTION EXHAUST FAN.
SLOPE ALL DUCTS TO MANIFOLD PLENUM AND PROVIDE CONDENSATE DRAIN IN PLENUM. DIRECT CONDENSATE TO ACID NEUTRALIZER AND INTO FLOOR DRAIN IN NORTH PENTHOUSE. REFER TO SHEET M-212 FOR INSTALLATION DETAILS. REFER TO ARCHITECTURAL DRAWINGS A213 FOR SUPPORT.
PORTABLE JIB CRANE, BY FAN MANUFACTURER, TO BE PROVIDED FOR MOTOR CHANGEOUT.

M3.03 PROVIDE GUARDRAIL AS INDICATED.

M3.04 PROVIDE PRESSURE GAUGES, MOTORIZED DAMPER, AND FLOW MEASUREMENT STATION TO CONTROL EXTERIOR EXHAUST STREAM. TIE TO BUILDING DDC.
TRANSITION FROM 965 Ø TO 1067x1067 TO ALLOW FOR INSTALLATION OF MOTORIZED DAMPER.

M3.05 NEW EXHAUST FAN FOR COMBINED CENTRE NORTHWEST EXHAUST STREAMS. REFER TO SHEET M-209 FOR CONNECTION/INTERIOR SPACE DETAILS.

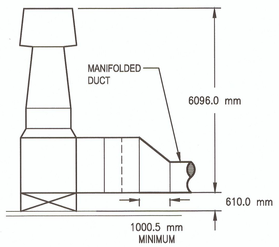

SECTION OF NEW EXHAUST UNIT
1:100

Public Works and Government Services Canada / Travaux publics et Services gouvernementaux Canada

REAL PROPERTY SERVICES
Pacific Region
SERVICES IMMOBILIERS
Région de Pacifique

PROFESSIONAL ENGINEER
PROVINCE OF BRITISH COLUMBIA
M. MARKOVIC
24829
JUL 13 2017

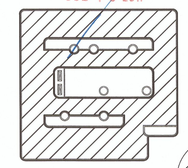

KEY PLAN
N.T.S.

Revision/ Revision	Description/Description	Date/Date
5		
4		
3	ISSUED FOR TENDER	2017-07-13
2	ISSUED FOR 100 % CD	2017-05-09
1	PRE-TENDER CD FOR CLIENT REVIEW	2017-04-05
0	50 % REVIEW	2017-03-03

Client/client
CANADIAN FOOD INSPECTION AGENCY

Project title/Titre du projet
3155 WILLINGDON GREEN
BURNABY, BC

CFIA
EXHAUST MANIFOLD SYSTEM

Consultant Signature Only

Designed by/Concept par
MM

Drawn by/Dessine par
SE

PWGSC Project Manager/Administrateur de Projets TPSGC

Regional Manager, Architectural and Engineering Services / Gestionnaire régionale, Services d'architectural et de génie, TPSGC

Drawing title/Titre du dessin
ROOF PLAN - NEW CONSTRUCTION

Project No./No. du projet	Sheet/ Feuille	Revision no./ La Révision no.
39903-150591	M-203 OF 12	3

PWGSC – A1 – 841X594

0 10 20 30 40 50 60 70 80 90 100mm

DM5XXXXXX

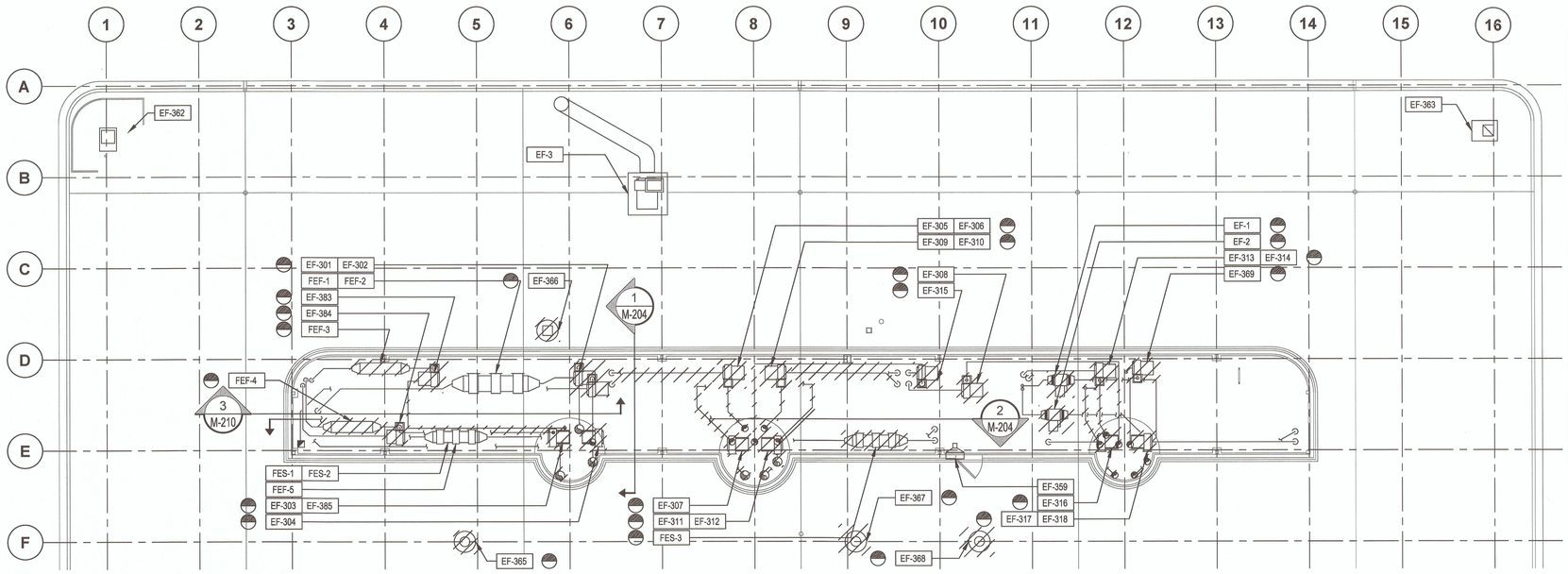

NORTH PENTHOUSE AND PARTIAL ROOF PLAN - DEMOLITION
1:100

NORTH PENTHOUSE EXHAUST FANS

TAG	REMOVE OR REMAIN	HOOD/CANOPY SERVICED	INLET DUCT SIZE (mm)
EF-1	REMOVE	CANOPY # 2	279 Ø
EF-2	REMOVE	CANOPY # 1	279 Ø
EF-301	REMOVE	H37, H38	457 Ø
EF-302	REMOVE	H37, H38	356 Ø
EF-303	REMOVE	H41	254 Ø
EF-304	REMOVE	H39	254 Ø
EF-305	REMOVE	H6	254 Ø
EF-306	REMOVE	H30	254 Ø
EF-307	REMOVE	H31	254 Ø
EF-308	REMOVE	H1	254 Ø
EF-309	REMOVE	H34	356 Ø
EF-310	REMOVE	H35	356 Ø
EF-311	REMOVE	H4	254 Ø
EF-312	REMOVE	H3	254 Ø
EF-313	REMOVE	H7	254 Ø
EF-314	REMOVE	H5	254 Ø
EF-315	REMOVE	H2	254 Ø
EF-316	REMOVE	H33	254 Ø
EF-317	REMOVE	H9	254 Ø
EF-318	REMOVE	H8	254 Ø
EF-359	REMAIN	N/A	Free inlet
EF-369	REMOVE	N/A	356x305
EF-383	REMOVE	N/A	152 Ø
EF-384	REMOVE	N/A	100 Ø
EF-385	REMOVE	H40	254 Ø

Rooftop exhaust fans EF-365, EF-366, EF-367, EF-368 are to be connected to the North Penthouse manifold as indicated on sheet M-205.

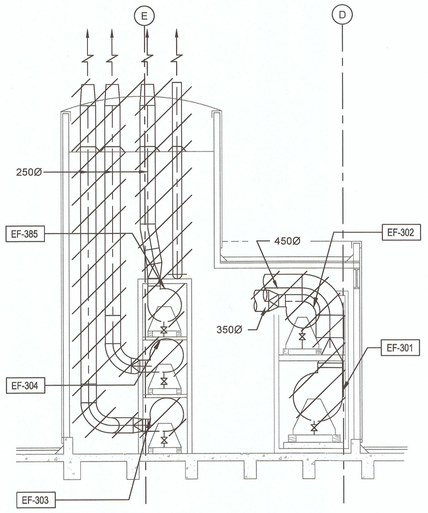

SECTION 1 / M-204
1:50

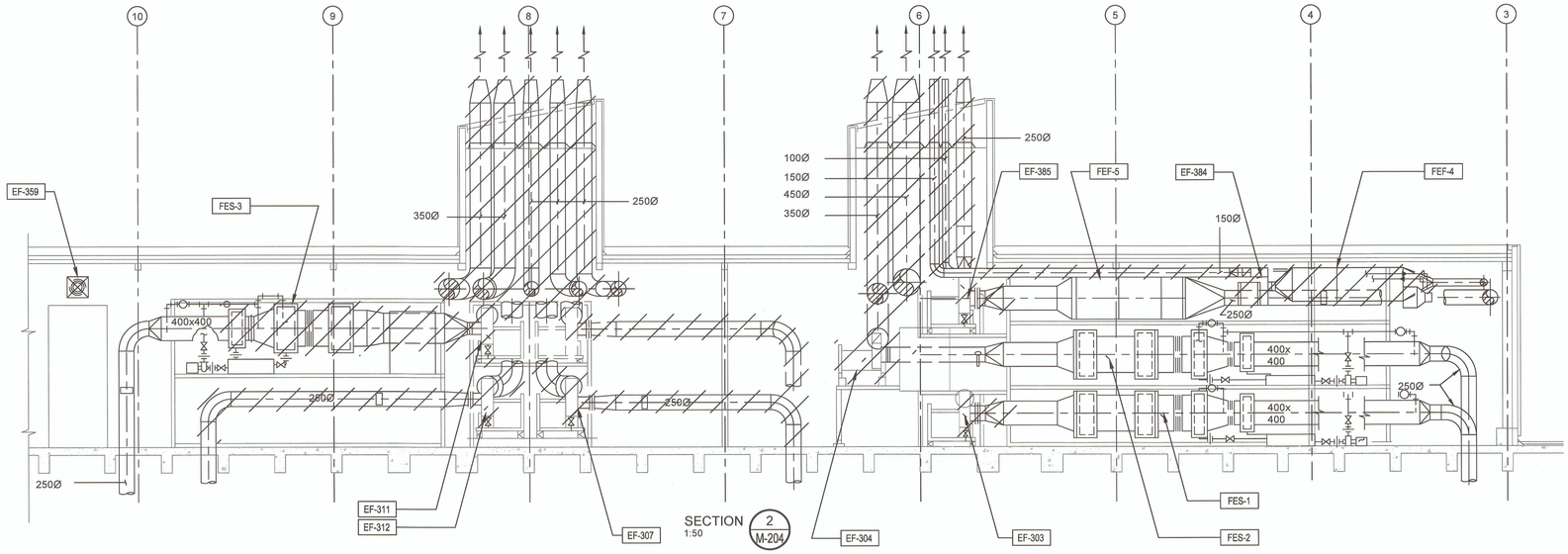

SECTION 2 / M-204
1:50

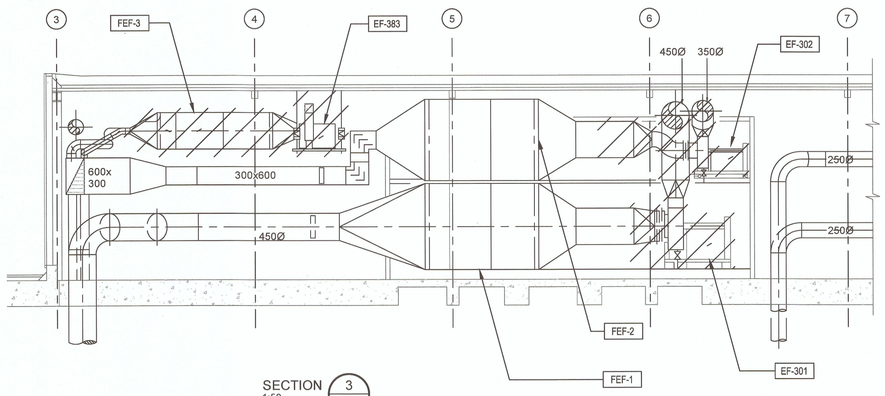

SECTION 3 / M-204
1:50

GENERAL NOTES

1. REMOVE EX. SECTIONS OF INLET DUCTWORK FROM 152 mm FROM FLOOR PENETRATION TO EX. EXHAUST FAN AS INDICATED. PREPARE FOR CONNECTION TO NEW PLUME DILUTION EXHAUST FAN PLENUM. REFER TO DRAWING FOR DUCT DIMENSIONS.
   REMOVE EXISTING STRUCTURAL STEEL SUPPORTS.
   NOTE: EXHAUST STREAMS ASSOCIATED WITH FEF-1, FEF-2, FEF-5, FES-1, AND FES-2 (EF-301, EF-302, EF-385, EF-303, AND EF-304, RESPECTIVELY) ARE TO HAVE ONLY THE EXHAUST DUCTWORK DOWNSTREAM OF THE FILTER/SCRUBBER REMOVED.
2. REMOVE EX. SECTIONS OF OUTLET DUCTWORK ASSOCIATED WITH EX. EXHAUST FANS. THIS IS TO INCLUDE EX. EXHAUST STACKS IN PENTHOUSE TURRETS. REFER TO, "TYP. EXHAUST STACK DEMOLITION", ON SHEET M-212 AND ARCHITECTURAL DRAWING A214.
3. FOR INFORMATION ON ROOFTOP EXHAUST FANS REFER TO DRAWINGS M-202 & M-203
4. EXISTING FUME EXHAUST FILTER MEDIA FOR SCRUBBERS/FILTERS, FES-1, FES-2, FES-3, FEF-3, AND FEF-4 ARE TO BE REMOVED BY CFIA OFFICIALS PRIOR TO DEMOLITION OF EXHAUST FANS.
   HOUSING, SILENCER, SCRUBBER PUMP, DUCTWORK, STRUCTURAL STEEL SUPPORT, AND ALL OTHER APPURTENANCES TO BE REMOVED BY CONTRACTOR.
   THE REMAINDER OF FUME EXHAUST SCRUBBERS AND FUME EXHAUST FILTERS (FEF-1, FEF-2, AND FEF-5) ARE TO REMAIN.

Public Works and Government Services Canada / Travaux publics et Services gouvernementaux Canada

REAL PROPERTY SERVICES
Pacific Region
SERVICES IMMOBILIERS
Région de Pacifique

PROFESSIONAL ENGINEER — PROVINCE OF BRITISH COLUMBIA — M. MARKOVIC 24829
JUL 13 2017

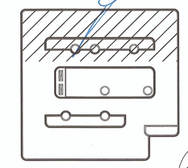

KEY PLAN
N.T.S.

Revision/ Révision	Description/Description	Date/Date
5		
4		
3	ISSUED FOR TENDER	2017-07-13
2	ISSUED FOR 100 % CD	2017-05-09
1	PRE-TENDER CD FOR CLIENT REVIEW	2017-04-05
0	50 % REVIEW	2017-03-03

Client/client

CANADIAN FOOD INSPECTION AGENCY

Project title/Titre du projet
3155 WILLINGDON GREEN
BURNABY, BC

CFIA
EXHAUST MANIFOLD SYSTEM

Consultant Signature Only

Designed by/Concept par
MM

Drawn by/Dessine par
SE

PWGSC Project Manager/Administrateur de Projets TPSGC

Regional Manager, Architectural and Engineering Services
Gestionnaire régionale, Services d'architectural et de génie, TPSGC

Drawing title/Titre du dessin
NORTH PENTHOUSE AND PARTIAL ROOF PLAN - DEMOLITION

Project No./No. du projet	Sheet/Feuille	Revision no./ La Révision no.
39903-150591	M-204 OF 12	3

PWGSC – A1 – 841X594

0 10 20 30 40 50 60 70 80 90 100mm

DM5XXXXXX

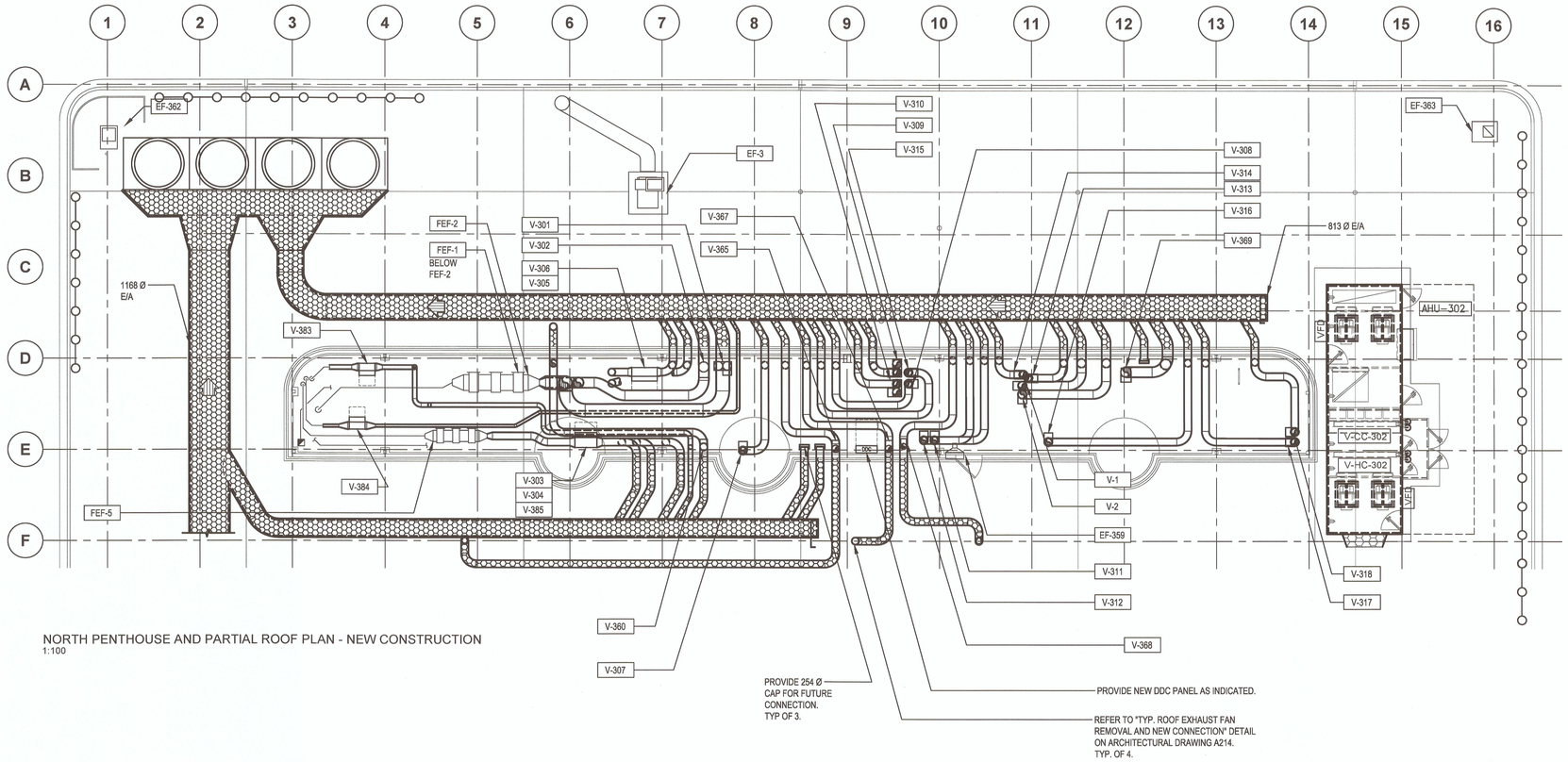

NORTH PENTHOUSE AND PARTIAL ROOF PLAN - NEW CONSTRUCTION
1:100

GENERAL NOTES

1. WHERE NECESSARY, AIR VALVES HAVE BEEN SHOWN AS OFFSET FOR CLARITY.
2. ALL PENTHOUSE WALL PENETRATIONS ARE TO BE CORED AS INDICATED. WHERE NO DUCT IS SHOWN CONNECTING THE CONTRACTOR IS TO PROVIDE A CAP FOR FUTURE CONNECTION.
3. ALLOW MINIMUM 356 mm CLEARANCE AROUND VALVE FOR SERVICING. ALLOW MINIMUM 171 mm UNOBSTRUCTED SPACE, IN DUCT, ON VALVE INLET. PROVIDE DUCTWORK SUPPORT WITHIN 305 mm OF VALVE INLET AND OUTLET.
4. ALL DUCTWORK (**INSIDE AND OUTSIDE OF THE PENTHOUSE**) IS TO BE SLOPED TO THE PLUME DILUTION EXHAUST FAN'S MANIFOLD PLENUM.
5. VALVE NOMENCLATURE IS TO MATCH THAT OF EXHAUST FAN REMOVED. I.E. V-301 IS ASSOCIATED WITH THE SAME EXHAUST STREAM AS EF-301.
6. WHERE MULTIPLE CONTROL VALVES ARE REQUIRED THE CONTRACTOR IS TO INSTALL AS PER MANUFACTURER`S RECOMMENDATIONS. REFER TO SHEET M-212 FOR TYPICAL DOUBLE CONNECTIONS.
7. CONTROL VALVES MUST BE ORIENTED SO THAT CONTROL BOARD IS BETWEEN 8 AND 4 O'CLOCK POSITIONS TO AVOID CONDENSATION BUILDUP.
8. FOR INFORMATION ON ROOFTOP EXHAUST FANS REFER TO DRAWINGS M-202 & M-203.
9. ALL EXPOSED DUCTWORK ON THE ROOF TO BE THERMALLY INSULATED WITH 50 mm THICK INSULATION AND PROVIDED WITH ALUMINUM JACKETING PER SPECIFICATION. JACKETING TO BE SEALED WITH POLYURETHANE CAULKING.
10. FOR INFORMATION ON DUCT/VALVE SIZES REFER TO TABLE "NEW NORTH PENTHOUSE CONTROL VALVES" ON THIS SHEET.
11. DUCT PENETRATIONS, OUT OF PENTHOUSE TO EXHAUST MANIFOLD DUCT, TO BE AT APPROXIMATELY THE SAME ELEVATION (APPROXIMATELY 1100 mm AFR).
12. VALVES ARE TO BE CONNECTED TO NEW DUCTWORK USING DRAWBAND CLAMPS APPROVED BY THE VALVE MANUFACTURER. NEW DUCTWORK IS TO BE WELDED TO CONNECT TO THE EXISTING DUCTWORK.

NORTH PENTHOUSE EXHAUST FANS/SCRUBBERS/FILTERS TO REMAIN

EQUIPMENT TAG
EF-359
FEF-1
FEF-2
FEF-5

NEW NORTH PENTHOUSE CONTROL VALVES

NEW VALVE TAG	HOOD/ CANOPY SERVICED	ASSOCIATED DUCTWORK SIZE (mm)	**CONTROL VALVE SIZE (mm)**	NUMBER OF CONTROL VALVES
V-1	CANOPY # 2	279 Ø	305 Ø	1
V-2	CANOPY # 1	279 Ø	305 Ø	1
V-301	H37, H38	457 Ø	356 Ø	2
V-302	H37, H38	356 Ø	356 Ø	1
V-303	H41	254 Ø	305 Ø	1
V-304	H39	254 Ø	305 Ø	1
V-305	H6	254 Ø	305 Ø	1
V-306	H30	254 Ø	305 Ø	1
V-307	H31	254 Ø	305 Ø	1
V-308	H1	254 Ø	305 Ø	1
V-309	H34	356 Ø	356 Ø	2
V-310	H35	356 Ø	356 Ø	2
V-311	H4	254 Ø	305 Ø	1
V-312	H3	254 Ø	305 Ø	1
V-313	H7	254 Ø	305 Ø	1
V-314	H5	254 Ø	305 Ø	1
V-315	H2	254 Ø	305 Ø	1
V-316	H33	254 Ø	305 Ø	1
V-317	H9	254 Ø	305 Ø	1
V-318	H8	254 Ø	305 Ø	1
V-365	N/A	254 Ø	254 Ø	1
V-366	N/A	254 Ø	254 Ø	1
V-367	N/A	254 Ø	254 Ø	1
V-368	N/A	75 Ø	203 Ø	1
V-369	N/A	356x305	356 Ø	1
V-383	N/A	152 Ø	254 Ø	1
V-384	N/A	100 Ø	254 Ø	1
V-385	H40	254 Ø	356 Ø	1

Public Works and Government Services Canada / Travaux publics et Services gouvernementaux Canada

REAL PROPERTY SERVICES
Pacific Region
SERVICES IMMOBILIERS
Région de Pacifique

PROFESSIONAL ENGINEER PROVINCE OF BRITISH COLUMBIA M. MARKOVIC 24829
JUL 13 2017

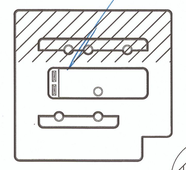

KEY PLAN
N.T.S.

Revision/ Revision	Description/Description	Date/Date
5		
4		
3	ISSUED FOR TENDER	2017-07-13
2	ISSUED FOR 100 % CD	2017-05-09
1	PRE-TENDER CD FOR CLIENT REVIEW	2017-04-05
0	50 % REVIEW	2017-03-03

Client/client
CANADIAN FOOD INSPECTION AGENCY

Project title/Titre du projet
3155 WILLINGDON GREEN BURNABY, BC

CFIA EXHAUST MANIFOLD SYSTEM

Consultant Signature Only

Designed by/Concept par
MM

Drawn by/Dessine par
SE

PWGSC Project Manager/Administrateur de Projets TPSGC

Regional Manager, Architectural and Engineering Services
Gestionnaire régionale, Services d'architectural et de génie, TPSGC

Drawing title/Titre du dessin
NORTH PENTHOUSE AND PARTIAL ROOF PLAN - NEW CONSTRUCTION

Project No./No. du projet	Sheet/ Feuille	Revision no./ La Révision no.
39903-150591	M-205 OF 12	3

PWGSC – A1 – 841X594

0 10 20 30 40 50 60 70 80 90 100mm

DM5XXXXXX

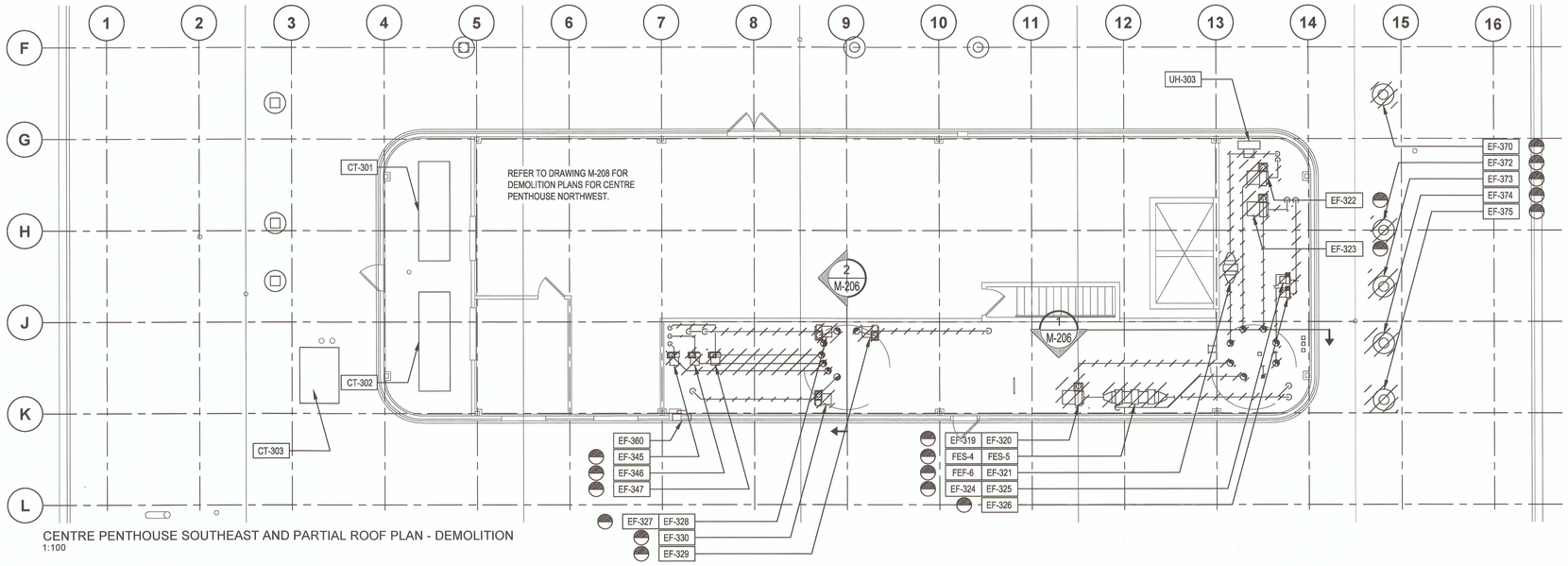

CENTRE PENTHOUSE SOUTHEAST AND PARTIAL ROOF PLAN - DEMOLITION
1:100

CENTRE PENTHOUSE (SOUTHEAST) EXHAUST FANS

TAG	REMOVE OR REMAIN	HOOD/CANOPY SERVICED	INLET DUCT SIZE (mm)
EF-319	REMOVE	H15	254 Ø
EF-320	REMOVE	H16	254 Ø
EF-321	REMOVE	H10	254 Ø
EF-322	REMOVE	H11	254 Ø
EF-323	REMOVE	H14	254 Ø
EF-324	REMOVE	H13	254 Ø
EF-325	REMOVE	H12	254 Ø
EF-326	REMOVE	H36	254 Ø
EF-327	REMOVE	H28	254 Ø
EF-328	REMOVE	H27	254 Ø
EF-329	REMOVE	H32	254 Ø
EF-330	REMOVE	H29	254 Ø
EF-345	REMOVE	N/A	203 Ø
EF-346	REMOVE	N/A	203 Ø
EF-347	REMOVE	N/A	305 Ø
EF-360	REMAIN	N/A	Free inlet

Rooftop exhaust fans EF-370, EF-372, EF-373, EF-374, and EF-375 are to be connected to the Centre Southeast Penthouse manifold as indicated on sheet M-207.
In addition, Centre Northwest Penthouse exhaust fans EF-349, EF-351, and EF-354, are to be routed through the Centre Northwest/Centre Southeast partition wall. Refer to specification for details on firestopping.

SECTION 1 / M-206
1:50

SECTION 2 / M-206
1:50

GENERAL NOTES

1. REMOVE EX. SECTIONS OF INLET DUCTWORK FROM 152 mm FROM FLOOR PENETRATION TO EX. EXHAUST FAN AS INDICATED. PREPARE FOR CONNECTION TO NEW PLUME DILUTION EXHAUST FAN PLENUM. REFER TO DRAWING FOR DUCT DIMENSIONS. REMOVE EXISTING STRUCTURAL STEEL SUPPORTS.
2. REMOVE EX. SECTIONS OF OUTLET DUCTWORK ASSOCIATED WITH EX. EXHAUST FANS. THIS IS TO INCLUDE EX. EXHAUST STACKS IN PENTHOUSE TURRETS. REFER TO, "TYP. EXHAUST STACK DEMOLITION", ON SHEET M-212 AND ARCHITECTURAL DRAWING A214.
3. FOR INFORMATION ON ROOFTOP EXHAUST FANS REFER TO DRAWINGS M-202 & M-203
4. EXISTING FUME EXHAUST FILTER MEDIA FOR SCRUBBERS AND FUME EXHAUST FILTER IN THIS AREA ARE TO BE REMOVED BY CFIA OFFICIALS PRIOR TO DEMOLITION OF EXHAUST FANS. HOUSING, SILENCER, SCRUBBER PUMP, DUCTWORK, STRUCTURAL STEEL SUPPORT, AND ALL OTHER APPURTENANCES TO BE REMOVED BY CONTRACTOR.
5. REMOVE AND REINSTALL EXISTING UNIT HEATER (UH-303) AND ALL ASSOCIATED APPURTENANCES. REFER TO SHEET M-207 FOR NEW LOCATION OF UNIT HEATER.

Public Works and Government Services Canada
Travaux publics et Services gouvernementaux Canada
REAL PROPERTY SERVICES
Pacific Region
SERVICES IMMOBILIERS
Région de Pacifique

PROFESSIONAL ENGINEER PROVINCE OF BRITISH COLUMBIA M. MARKOVIC 24899
JUL 13 2017

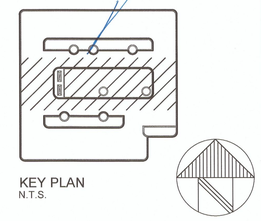

KEY PLAN
N.T.S.

Revision/ Revision	Description/Description	Date/Date
5		
4		
3	ISSUED FOR TENDER	2017-07-13
2	ISSUED FOR 100 % CD	2017-05-09
1	PRE-TENDER CD FOR CLIENT REVIEW	2017-04-05
0	50 % REVIEW	2017-03-03

Client/client
CANADIAN FOOD INSPECTION AGENCY

Project title/Titre du projet
3155 WILLINGDON GREEN BURNABY, BC

CFIA EXHAUST MANIFOLD SYSTEM

Consultant Signature Only

Designed by/Concept par
MM

Drawn by/Dessine par
SE

PWGSC Project Manager/Administrateur de Projets TPSGC

Regional Manager, Architectural and Engineering Services, Gestionnaire régionale, Services d'architectural et de génie, TPSGC

Drawing title/Titre du dessin
CENTRE PENTHOUSE SOUTHEAST AND PARTIAL ROOF PLAN - DEMOLITION

Project No./No. du projet	Sheet/Feuille	Revision no./ La Révision no.
39903-150591	M-206 OF 12	3

PWGSC – A1 – 841X594

0 10 20 30 40 50 60 70 80 90 100mm

DM5XXXXXX

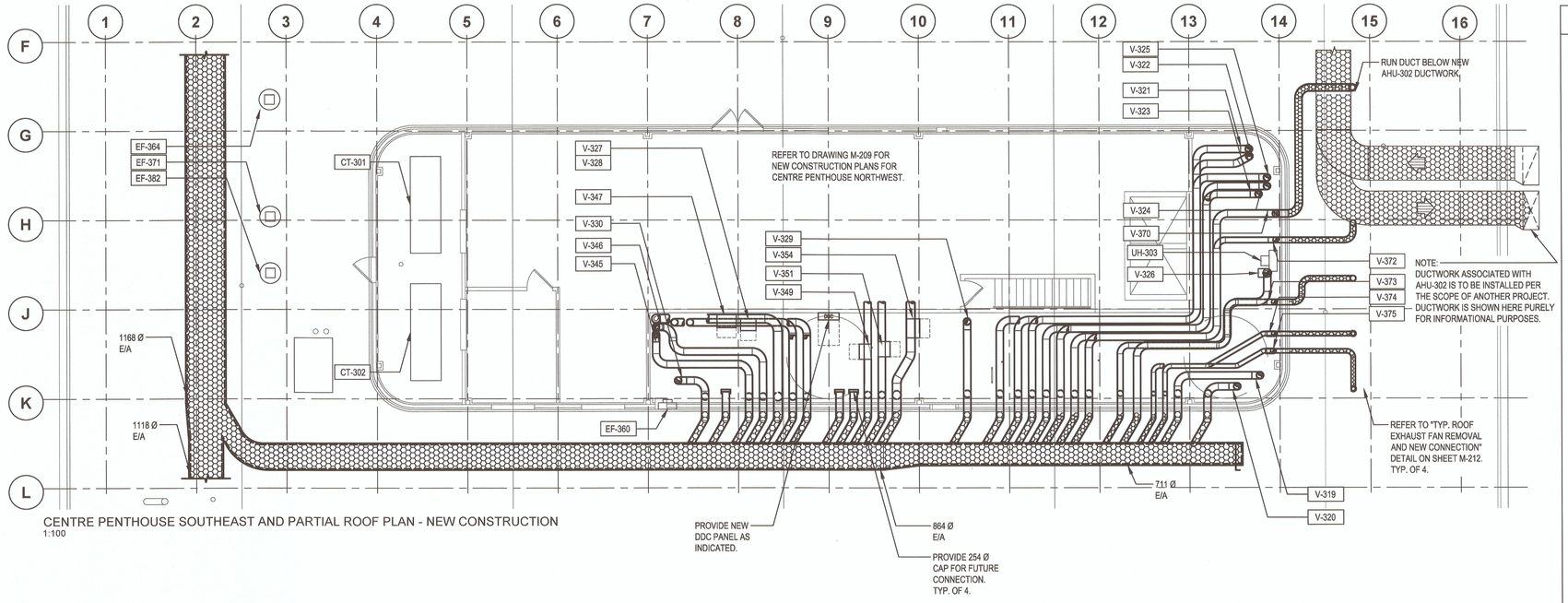

CENTRE PENTHOUSE SOUTHEAST AND PARTIAL ROOF PLAN - NEW CONSTRUCTION
1:100

GENERAL NOTES

1. WHERE NECESSARY, AIR VALVES HAVE BEEN SHOWN AS OFFSET FOR CLARITY.
2. ALL PENTHOUSE WALL PENETRATIONS ARE TO BE CORED AS INDICATED. WHERE NO DUCT IS SHOWN CONNECTING THE CONTRACTOR IS TO PROVIDE A CAP FOR FUTURE CONNECTION.
3. ALLOW MINIMUM 356 mm CLEARANCE AROUND VALVE FOR SERVICING. ALLOW MINIMUM 171 mm UNOBSTRUCTED SPACE, IN DUCT, ON VALVE INLET. PROVIDE DUCTWORK SUPPORT WITHIN 305 mm OF VALVE INLET AND OUTLET.
4. ALL DUCTWORK (INSIDE AND OUTSIDE OF THE PENTHOUSE) IS TO BE SLOPED TO THE PLUME DILUTION EXHAUST FAN'S MANIFOLD PLENUM.
5. VALVE NOMENCLATURE IS TO MATCH THAT OF EXHAUST FAN REMOVED. I.E. V-319 IS ASSOCIATED WITH THE SAME EXHAUST STREAM AS EF-319.
6. WHERE MULTIPLE CONTROL VALVES ARE REQUIRED THE CONTRACTOR IS TO INSTALL AS PER MANUFACTURER'S RECOMMENDATIONS. REFER TO SHEET M-212 FOR TYPICAL DOUBLE CONNECTIONS.
7. CONTROL VALVES MUST BE ORIENTED SO THAT CONTROL BOARD IS BETWEEN 8 AND 4 O'CLOCK POSITIONS TO AVOID CONDENSATION BUILDUP.
8. FOR INFORMATION ON ROOFTOP EXHAUST FANS REFER TO DRAWINGS M-202 & M-203.
9. FOR INFORMATION ON DUCT/VALVE SIZES REFER TO TABLE "NEW CENTRE PENTHOUSE (SOUTHEAST) CONTROL VALVES" ON THIS SHEET.
10. DUCT PENETRATIONS, OUT OF PENTHOUSE TO EXHAUST MANIFOLD DUCT, TO BE AT APPROXIMATELY THE SAME ELEVATION (APPROXIMATELY 1100 mm AFR).
11. ALL EXPOSED DUCTWORK ON THE ROOF TO BE THERMALLY INSULATED WITH 50 mm THICK INSULATION AND PROVIDED WITH ALUMINUM JACKETING PER SPECIFICATION. JACKETING TO BE SEALED WITH POLYURETHANE CAULKING.
12. VALVES ARE TO BE CONNECTED TO NEW DUCTWORK USING DRAWBAND CLAMPS APPROVED BY THE VALVE MANUFACTURER. NEW DUCTWORK IS TO BE WELDED TO CONNECT TO THE EXISTING DUCTWORK.
13. REMOVE AND REINSTALL EXISTING UNIT HEATER (UH-303) AND ALL ASSOCIATED APPURTENANCES. REFER TO THIS SHEET FOR NEW LOCATION.

CENTRE PENTHOUSE (SOUTHEAST) EXHAUST FANS/SCRUBBERS/FILTERS TO REMAIN

EQUIPMENT TAG
EF-326
EF-360

NEW CENTRE PENTHOUSE (SOUTHEAST) CONTROL VALVES

NEW VALVE TAG	HOOD/ CANOPY SERVICED	ASSOCIATED DUCTWORK SIZE (mm)	CONTROL VALVE SIZE (mm)	NUMBER OF CONTROL VALVES
V-319	H15	254 Ø	305 Ø	1
V-320	H16	254 Ø	254 Ø	1
V-321	H10	254 Ø	305 Ø	1
V-322	H11	254 Ø	305 Ø	1
V-323	H14	254 Ø	305 Ø	1
V-324	H13	254 Ø	305 Ø	1
V-325	H12	254 Ø	305 Ø	1
v-326	H36	254 Ø	305 Ø	1
V-327	H28	254 Ø	254 Ø	1
V-328	H27	254 Ø	254 Ø	1
V-329	H32	254 Ø	305 Ø	1
V-330	H29	254 Ø	305 Ø	1
V-345	N/A	203 Ø	203 Ø	1
V-346	N/A	203 Ø	203 Ø	1
V-347	N/A	305 Ø	305 Ø	1
V-349	N/A	356x254	254 Ø	1
V-351	N/A	152x152	254 Ø	1
V-354	N/A	356x203	305 Ø	1
V-370	N/A	152x152	254 Ø	1
V-372	N/A	203 Ø	203 Ø	1
V-373	N/A	203 Ø	203 Ø	1
V-374	N/A	152 Ø	203 Ø	1
V-375	N/A	152 Ø	203 Ø	1

Public Works and Government Services Canada / Travaux publics et Services gouvernementaux Canada

REAL PROPERTY SERVICES
Pacific Region
SERVICES IMMOBILIERS
Région de Pacifique

PROFESSIONAL ENGINEER — PROVINCE OF BRITISH COLUMBIA — M. MARKOVIC 24829 — JUL 13 2017

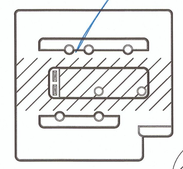

KEY PLAN
N.T.S.

Revision/ Revision	Description/Description	Date/Date
5		
4		
3	ISSUED FOR TENDER	2017-07-13
2	ISSUED FOR 100 % CD	2017-05-09
1	PRE-TENDER CD FOR CLIENT REVIEW	2017-04-05
0	50 % REVIEW	2017-03-03

Client/client
CANADIAN FOOD INSPECTION AGENCY

Project title/Titre du projet
3155 WILLINGDON GREEN BURNABY, BC

CFIA EXHAUST MANIFOLD SYSTEM

Consultant Signature Only

Designed by/Concept par
MM

Drawn by/Dessine par
SE

PWGSC Project Manager/Administrateur de Projets TPSGC

Regional Manager, Architectural and Engineering Services, Gestionnaire régionale, Services d'architectural et de génie, TPSGC

Drawing title/Titre du dessin
CENTRE PENTHOUSE SOUTHEAST AND PARTIAL ROOF PLAN - NEW CONSTRUCTION

Project No./No. du projet	Sheet/ Feuille	Revision no./ La Révision no.
39903-150591	M-207 OF 12	3

PWGSC – A1 – 841X594

0 10 20 30 40 50 60 70 80 90 100mm

DM5XXXXXX

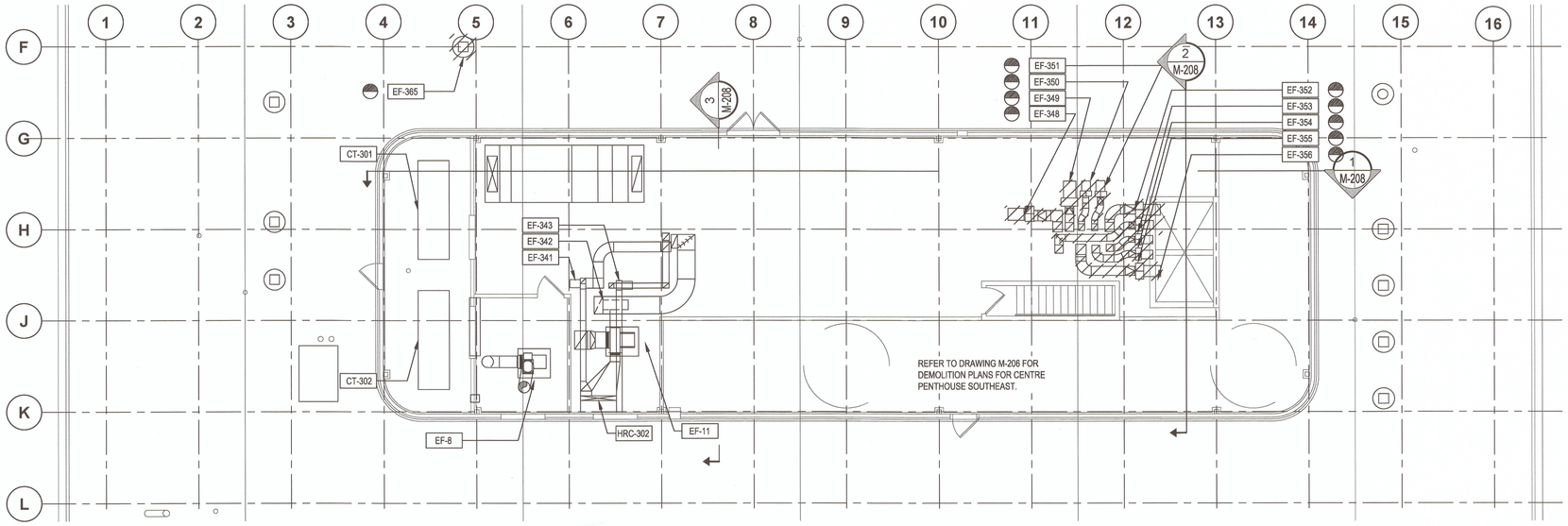

CENTRE PENTHOUSE NORTHWEST AND PARTIAL ROOF PLAN - DEMOLITION
1:100

CENTRE PENTHOUSE (NORTHWEST SIDE) EXHAUST FANS

TAG	REMOVE OR REMAIN	HOOD/CANOPY SERVICED	INLET DUCT SIZE (mm)
EF-8	REMAIN	213 CANOPY	406 Ø
EF-11	REMAIN	N/A	457x356
EF-341	REMOVE	N/A	356x356
EF-342	REMOVE	N/A	610x305
EF-343	REMOVE	N/A	254x254
EF-348	REMOVE	N/A	305x305
EF-349	REMOVE	N/A	356x254
EF-350	REMOVE	N/A	254x254
EF-351	REMOVE	N/A	152x152
EF-352	REMOVE	N/A	406x356
EF-353	REMOVE	N/A	305x203
EF-354	REMOVE	N/A	356x203
EF-355	REMOVE	N/A	203x152
EF-356	REMOVE	N/A	356x203

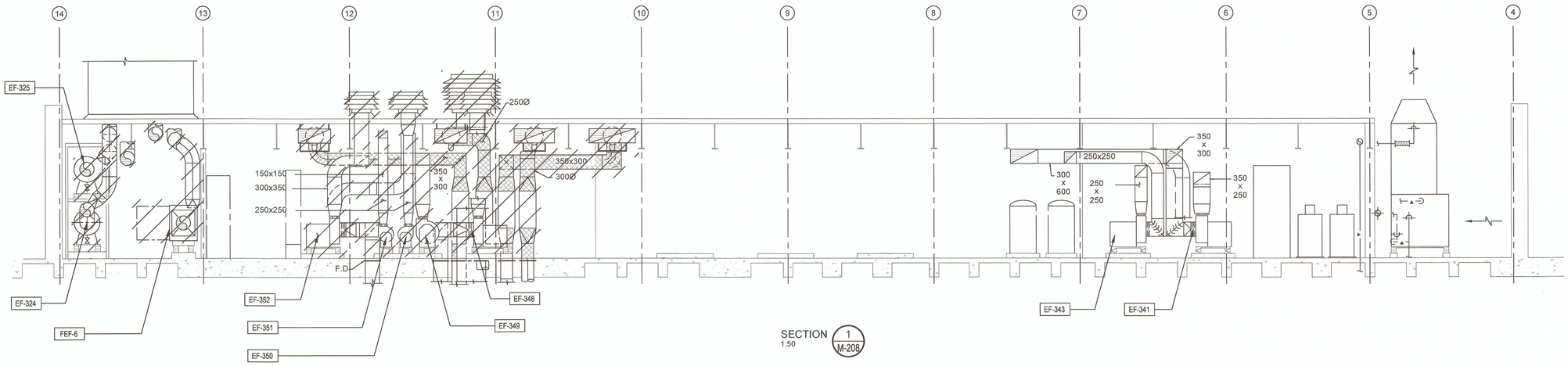

SECTION 1 / M-208
1:50

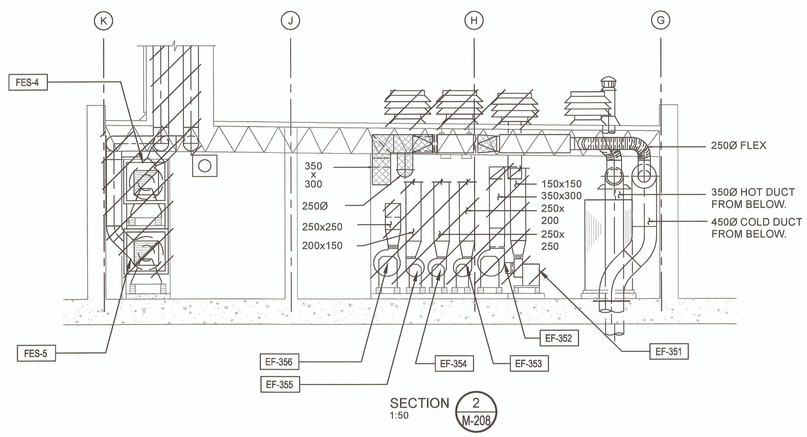

SECTION 2 / M-208
1:50

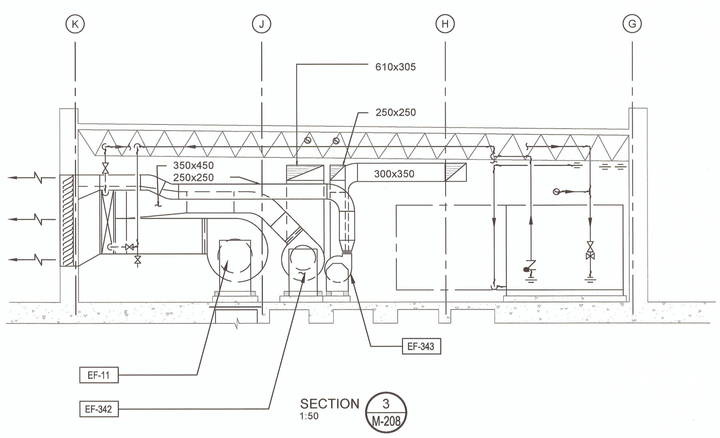

SECTION 3 / M-208
1:50

GENERAL NOTES

1. REMOVE EX. SECTIONS OF INLET DUCTWORK FROM 152 mm FROM FLOOR PENETRATION TO EX. EXHAUST FAN AS INDICATED. PREPARE FOR CONNECTION TO NEW PLUME DILUTION EXHAUST FAN PLENUM. REFER TO DRAWING FOR DUCT DIMENSIONS.
2. REMOVE EX. SECTIONS OF OUTLET DUCTWORK ASSOCIATED WITH EX. EXHAUST FANS. THIS IS TO INCLUDE EX. EXHAUST STACKS IN PENTHOUSE TURRETS. REFER TO, "TYP. EXHAUST STACK DEMOLITION", ON SHEET M-212 AND ARCHITECTURAL DRAWING A214.

Public Works and Government Services Canada / Travaux publics et Services gouvernementaux Canada

REAL PROPERTY SERVICES
Pacific Region
SERVICES IMMOBILIERS
Région de Pacifique

PROFESSIONAL ENGINEER — PROVINCE OF BRITISH COLUMBIA — M. MARKOVIC 24829
JUL 13 2017

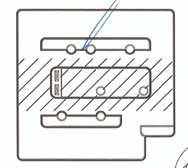

KEY PLAN
N.T.S.

5		
4		
3	ISSUED FOR TENDER	2017-07-13
2	ISSUED FOR 100 % CD	2017-05-09
1	PRE-TENDER CD FOR CLIENT REVIEW	2017-04-05
0	50 % REVIEW	2017-03-03
Revision/ Revision	Description/Description	Date/Date

Client/client

CANADIAN FOOD INSPECTION AGENCY

Project title/Titre du projet

3155 WILLINGDON GREEN BURNABY, BC

CFIA EXHAUST MANIFOLD SYSTEM

Consultant Signature Only

Designed by/Concept par
MM

Drawn by/Dessine par
SE

PWGSC Project Manager/Administrateur de Projets TPSGC

Regional Manager, Architectural and Engineering Services / Gestionnaire régionale, Services d'architectural et de génie, TPSGC

Drawing title/Titre du dessin

CENTRE PENTHOUSE NORTHWEST AND PARTIAL ROOF PLAN - DEMOLITION

Project No./No. du projet	Sheet/Feuille	Revision no./ La Révision no.
39903-150591	M-208 OF 12	3

PWGSC – A1 – 841X594

0 10 20 30 40 50 60 70 80 90 100mm

DM5XXXXX

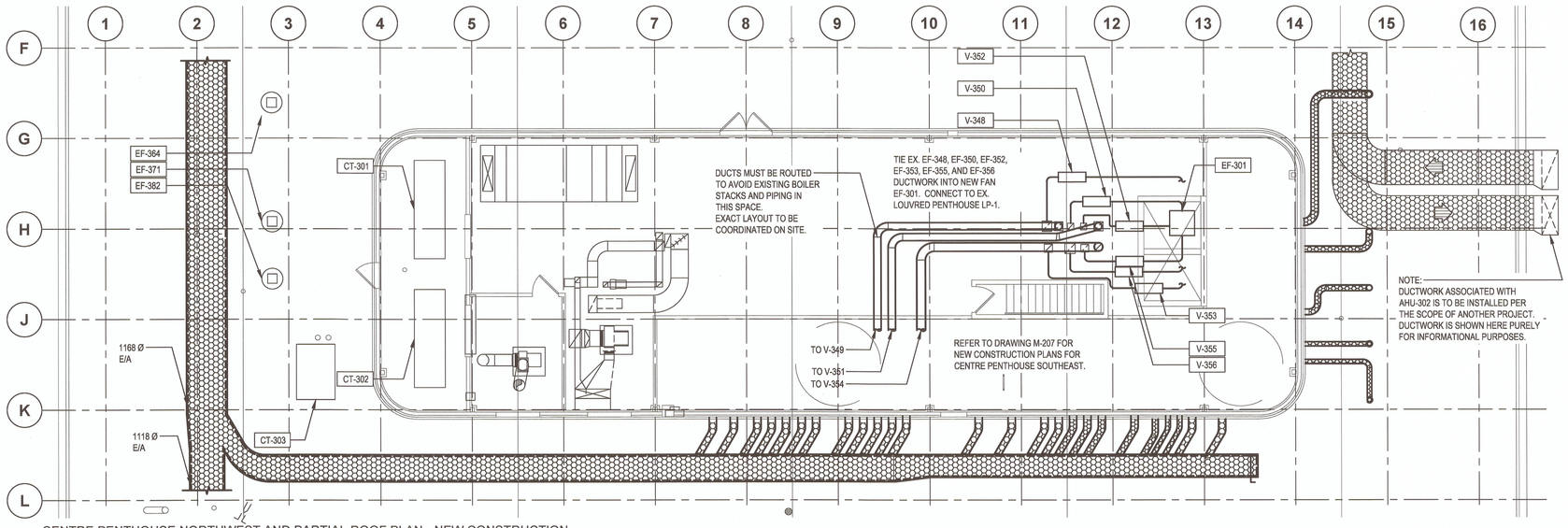

CENTRE PENTHOUSE NORTHWEST AND PARTIAL ROOF PLAN - NEW CONSTRUCTION
1:100

GENERAL NOTES

1. VALVE NOMENCLATURE IS TO MATCH THAT OF EXHAUST FAN REMOVED. I.E. V-341 IS ASSOCIATED WITH THE SAME EXHAUST STREAM AS EF-341.
2. ALLOW MINIMUM 356 mm CLEARANCE AROUND VALVE FOR SERVICING. ALLOW MINIMUM 171 mm UNOBSTRUCTED SPACE, IN DUCT, ON VALVE INLET. PROVIDE DUCTWORK SUPPORT WITHIN 305 mm OF VALVE INLET AND OUTLET.
3. ALL DUCTWORK (INSIDE AND OUTSIDE OF THE PENTHOUSE) IS TO BE SLOPED TO THE PLUME DILUTION EXHAUST FAN'S MANIFOLD PLENUM.
4. WHERE MULTIPLE CONTROL VALVES ARE REQUIRED THE CONTRACTOR IS TO INSTALL AS PER MANUFACTURER'S RECOMMENDATIONS. REFER TO SHEET M-212 FOR TYPICAL DOUBLE CONNECTIONS.
5. CONTROL VALVES MUST BE ORIENTED SO THAT CONTROL BOARD IS BETWEEN 8 AND 4 O'CLOCK POSITIONS TO AVOID CONDENSATION BUILDUP.
6. EXISTING DUCTWORK IN THIS AREA IS GALVANIZED STEEL WITH ASBESTOS DUCT JOINTS. CONTRACTOR IS TO EMPLOY APPROPRIATE SAFETY PROTOCOLS.
7. ALL EXPOSED DUCTWORK ON THE ROOF TO BE THERMALLY INSULATED WITH 50 mm THICK INSULATION AND PROVIDED WITH ALUMINUM JACKETING PER SPECIFICATION. JACKETING TO BE SEALED WITH POLYURETHANE CAULKING.
8. ALL PENTHOUSE WALL PENETRATIONS ARE TO BE CORED AS INDICATED. WHERE NO DUCT IS SHOWN CONNECTING THE CONTRACTOR IS TO PROVIDE A CAP FOR FUTURE CONNECTION.
9. FOR INFORMATION ON DUCT/VALVE SIZES REFER TO TABLE "NEW CENTRE PENTHOUSE (SOUTHEAST) CONTROL VALVES" ON THIS SHEET.
10. DUCT PENETRATIONS, OUT OF PENTHOUSE TO EXHAUST MANIFOLD DUCT, TO BE AT APPROXIMATELY THE SAME ELEVATION (APPROXIMATELY 1100 mm AFR).
11. VALVES ARE TO BE CONNECTED TO NEW DUCTWORK USING DRAWBAND CLAMPS APPROVED BY THE VALVE MANUFACTURER. NEW DUCTWORK IS TO BE WELDED TO CONNECT TO THE EXISTING DUCTWORK.

CENTRE PENTHOUSE (NORTHWEST) EXHAUST FANS/SCRUBBERS/FILTERS TO REMAIN

EQUIPMENT TAG
CT-301
CT-302
CT-303
EF-8
EF-11
EF-341
EF-342
EF-343
HRC-302

NEW CENTRE PENTHOUSE (NORTHWEST SIDE) CONTROL VALVES

NEW VALVE TAG	HOOD/ CANOPY SERVICED	ASSOCIATED DUCTWORK SIZE (mm)	**CONTROL VALVE SIZE (mm)**	NUMBER OF CONTROL VALVES
V-341	N/A	356x356	356 Ø	1
V-342	N/A	610x305	356 Ø	1
V-343	N/A	254x254	254 Ø	1
V-348	N/A	305x305	305 Ø	1
V-350	N/A	254x254	254 Ø	1
V-352	N/A	406x356	356 Ø	1
V-353	N/A	305x203	305 Ø	1
V-355	N/A	203x152	203 Ø	1
V-356	N/A	356x203	305 Ø	1

Public Works and Government Services Canada / Travaux publics et Services gouvernementaux Canada

REAL PROPERTY SERVICES
Pacific Region
SERVICES IMMOBILIERS
Région de Pacifique

PROFESSIONAL ENGINEER — PROVINCE OF BRITISH COLUMBIA — M. MARKOVIC 24829
JUL 13 2017

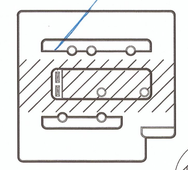

KEY PLAN
N.T.S.

Revision/ Revision	Description/Description	Date/Date
5		
4		
3	ISSUED FOR TENDER	2017-07-13
2	ISSUED FOR 100 % CD	2017-05-09
1	PRE-TENDER CD FOR CLIENT REVIEW	2017-04-05
0	50 % REVIEW	2017-03-03

Client/client
CANADIAN FOOD INSPECTION AGENCY

Project title/Titre du projet
3155 WILLINGDON GREEN BURNABY, BC

CFIA EXHAUST MANIFOLD SYSTEM

Consultant Signature Only

Designed by/Concept par
MM

Drawn by/Dessine par
SE

PWGSC Project Manager/Administrateur de Projets TPSGC

Regional Manager, Architectural and Engineering Services / Gestionnaire régionale, Services d'architectural et de génie, TPSGC

Drawing title/Titre du dessin
CENTRE PENTHOUSE NORTHWEST AND PARTIAL ROOF PLAN - NEW CONSTRUCTION

Project No./No. du projet	Sheet/Feuille	Revision no./ La Révision no.
39903-150591	M-209 OF 12	3

PWGSC – A1 – 841X594

0 10 20 30 40 50 60 70 80 90 100mm

DM5XXXXX

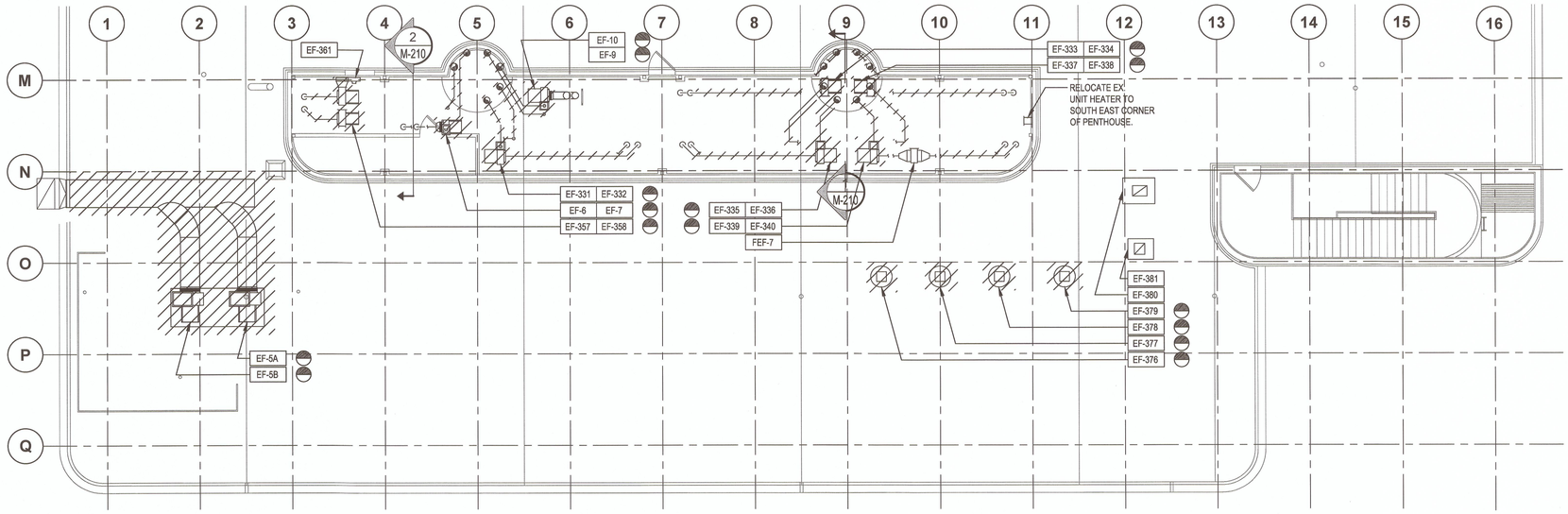

SOUTH PENTHOUSE AND PARTIAL ROOF PLAN - DEMOLITION
1:100

SOUTH PENTHOUSE EXHAUST FANS

TAG	REMOVE OR REMAIN	HOOD/CANOPY SERVICED	INLET DUCT SIZE (mm)
EF-6	REMOVE	H1	229 Ø
EF-7	REMOVE	B5C09	229 Ø
EF-9	REMOVE	H1056	229 Ø
EF-10	REMOVE	214C CANOPY	229 Ø
EF-331	REMOVE	H25	254 Ø
EF-332	REMOVE	H24	254 Ø
EF-333	REMOVE	H20	254 Ø
EF-334	REMOVE	H23	254 Ø
EF-335	REMOVE	H21	203 Ø
EF-336	REMOVE	H22	254 Ø
EF-337	REMOVE	H17	254 Ø
EF-338	REMOVE	H18	254 Ø
EF-339	REMOVE	H19	203 Ø
EF-340	REMOVE	H26	254 Ø
EF-357	REMOVE	214D CANOPY	325x254
EF-358	REMOVE	216 CANOPY	325x254
EF-361	REMAIN	N/A	Free Inlet

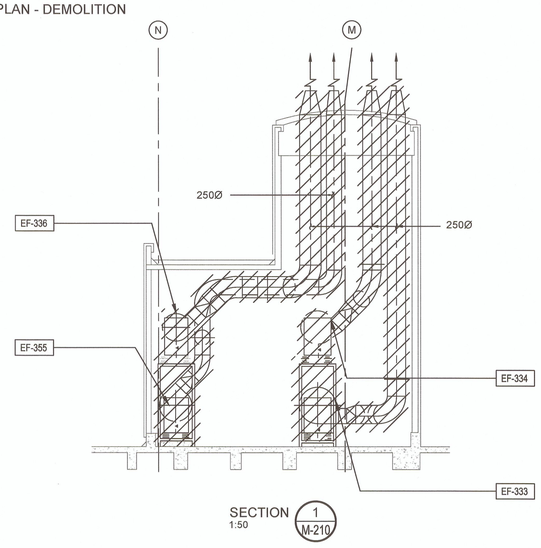

SECTION 1 / M-210
1:50

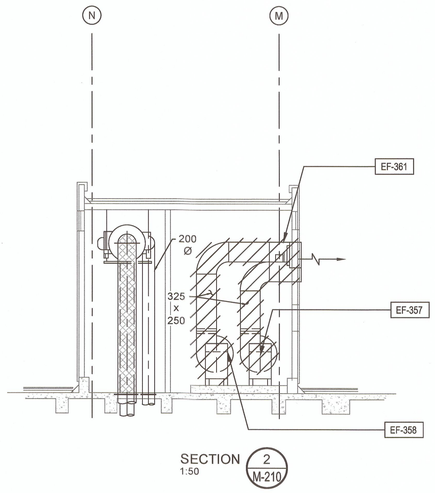

SECTION 2 / M-210
1:50

GENERAL NOTES

1. REMOVE EX. SECTIONS OF INLET DUCTWORK FROM 152 mm FROM FLOOR PENETRATION TO EX. EXHAUST FAN AS INDICATED. PREPARE FOR CONNECTION TO NEW PLUME DILUTION EXHAUST FAN PLENUM. REFER TO DRAWING FOR DUCT DIMENSIONS. REMOVE EXISTING STRUCTURAL STEEL SUPPORTS.
2. REMOVE EX. SECTIONS OF OUTLET DUCTWORK ASSOCIATED WITH EX. EXHAUST FANS. THIS IS TO INCLUDE EX. EXHAUST STACKS IN PENTHOUSE TURRETS. REFER TO, "TYP. EXHAUST STACK DEMOLITION", ON SHEET M-212 AND ARCHITECTURAL DRAWING A214.
3. FOR INFORMATION ON ROOFTOP EXHAUST FANS REFER TO DRAWINGS M-202 & M-203
4. EXISTING FUME EXHAUST FILTER IN THIS AREA (FEF-7) IS TO BE RELOCATED AND CONNECTED TO EXHAUST STREAM ASSOCIATED WITH EF-335
CONTRACTOR TO REMOVE OR RELOCATE THE EXISTING STRUCTURAL SUPPORT.

Public Works and Government Services Canada / Travaux publics et Services gouvernementaux Canada

REAL PROPERTY SERVICES
Pacific Region
SERVICES IMMOBILIERS
Région de Pacifique

PROFESSIONAL ENGINEER — PROVINCE OF BRITISH COLUMBIA — M. MARKOVIC 24829 — JUL 13 2017

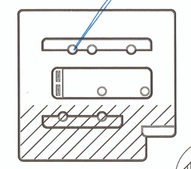

KEY PLAN
N.T.S.

Revision/ Revision	Description/Description	Date/Date
5		
4		
3	ISSUED FOR TENDER	2017-07-13
2	ISSUED FOR 100 % CD	2017-05-09
1	PRE-TENDER CD FOR CLIENT REVIEW	2017-04-05
0	50 % REVIEW	2017-03-03

Client/client
CANADIAN FOOD INSPECTION AGENCY

Project title/Titre du projet
3155 WILLINGDON GREEN
BURNABY, BC

CFIA
EXHAUST MANIFOLD SYSTEM

Consultant Signature Only

Designed by/Concept par
MM

Drawn by/Dessiné par
SE

PWGSC Project Manager/Administrateur de Projets TPSGC

Regional Manager, Architectural and Engineering Services / Gestionnaire régionale, Services d'architectural et de génie, TPSGC

Drawing title/Titre du dessin
SOUTH PENTHOUSE AND PARTIAL ROOF PLAN - DEMOLITION

Project No./No. du projet	Sheet/ Feuille	Revision no./ La Révision no.
39903-150591	M-210 OF 12	3

PWGSC – A1 – 841X594

0 10 20 30 40 50 60 70 80 90 100mm

DM5XXXXXX

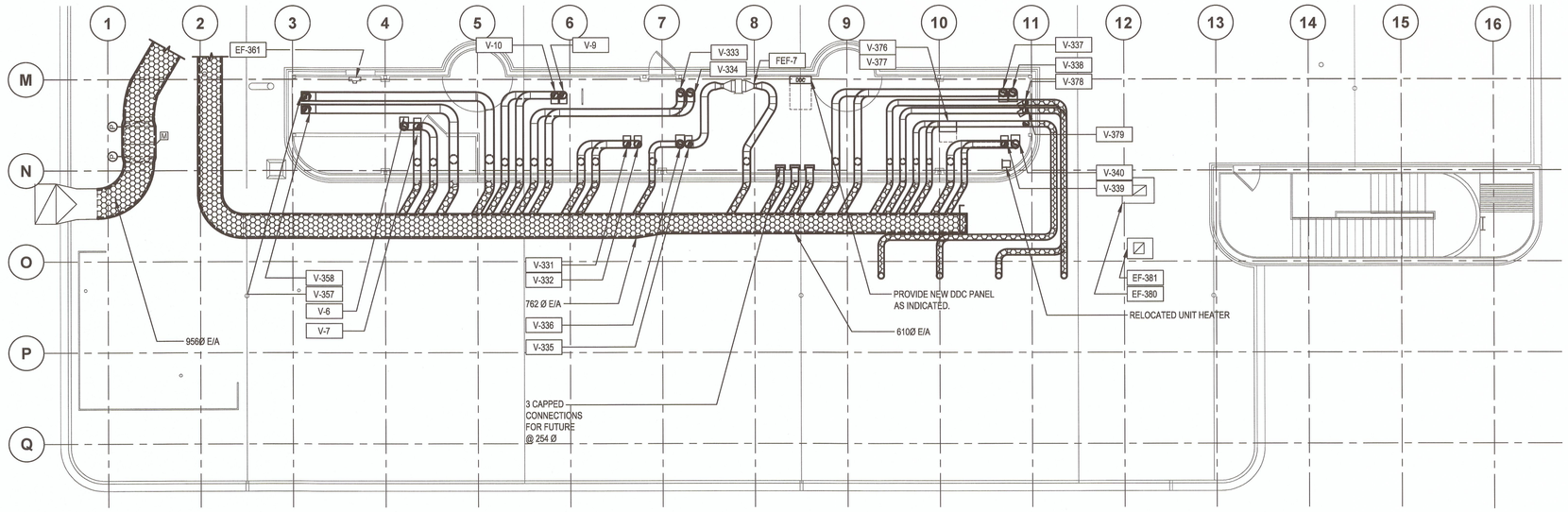

SOUTH PENTHOUSE AND PARTIAL ROOF PLAN - NEW CONSTRUCTION
1:100

GENERAL NOTES

1. VALVE NOMENCLATURE IS TO MATCH THAT OF EXHAUST FAN REMOVED, I.E. V-341 IS ASSOCIATED WITH THE SAME EXHAUST STREAM AS EF-341.
2. ALLOW MINIMUM 356 mm CLEARANCE AROUND VALVE FOR SERVICING. ALLOW MINIMUM 171 mm UNOBSTRUCTED SPACE, IN DUCT, ON VALVE INLET. PROVIDE DUCTWORK SUPPORT WITHIN 305 mm OF VALVE INLET AND OUTLET.
3. ALL DUCTWORK (INSIDE AND OUTSIDE OF THE PENTHOUSE) IS TO BE SLOPED TO THE PLUME DILUTION EXHAUST FAN'S MANIFOLD PLENUM.
4. RELOCATE FEF-7 AS INDICATED AND CONNECT TO V-335.
5. CONTROL VALVES MUST BE ORIENTED SO THAT CONTROL BOARD IS BETWEEN 8 AND 4 O'CLOCK POSITIONS TO AVOID CONDENSATION BUILDUP.
6. FOR INFORMATION ON DUCT/VALVE SIZES REFER TO TABLE "NEW CENTRE PENTHOUSE (SOUTHEAST) CONTROL VALVES" ON THIS SHEET.
7. DUCT PENETRATIONS, OUT OF PENTHOUSE TO EXHAUST MANIFOLD DUCT, TO BE AT APPROXIMATELY THE SAME ELEVATION (APPROXIMATELY 1100 mm AFR).
8. ALL EXPOSED DUCTWORK ON THE ROOF TO BE THERMALLY INSULATED WITH 50 mm THICK INSULATION AND PROVIDED WITH ALUMINUM JACKETING PER SPECIFICATION. JACKETING TO BE SEALED WITH POLYURETHANE CAULKING.
9. VALVES ARE TO BE CONNECTED TO NEW DUCTWORK USING DRAWBAND CLAMPS APPROVED BY THE VALVE MANUFACTURER. NEW DUCTWORK IS TO BE WELDED TO CONNECT TO THE EXISTING DUCTWORK.

SOUTH PENTHOUSE EXHAUST FANS/SCRUBBERS/FILTERS TO REMAIN

EQUIPMENT TAG
EF-361
FEF-7 (RELOCATED)

NEW SOUTH PENTHOUSE CONTROL VALVES

NEW VALVE TAG	HOOD/ CANOPY SERVICED	ASSOCIATED DUCTWORK SIZE (mm)	CONTROL VALVE SIZE (mm)	NUMBER OF CONTROL VALVES
V-6	H1	229 Ø	254 Ø	1
V-7	BSC09	229 Ø	254 Ø	1
V-9	H1056	229 Ø	254 Ø	1
V-10	214C CANOPY	229 Ø	254 Ø	1
V-331	H25	254 Ø	305 Ø	1
V-332	H24	254 Ø	305 Ø	1
V-333	H20	254 Ø	305 Ø	1
V-334	H23	254 Ø	305 Ø	1
V-335	H21	203 Ø	254 Ø	1
V-336	H22	254 Ø	305 Ø	1
V-337	H17	254 Ø	305 Ø	1
V-338	H18	254 Ø	305 Ø	1
V-339	H19	203 Ø	254 Ø	1
V-340	H26	254 Ø	305 Ø	1
V-357	214D CANOPY	305 Ø	305 Ø	1
V-358	216 CANOPY	305 Ø	305 Ø	1
V-376	N/A	203 Ø	203 Ø	1
V-377	N/A	203 Ø	203 Ø	1
V-378	N/A	203 Ø	203 Ø	1
V-379	N/A	203 Ø	203 Ø	1

Public Works and Government Services Canada / Travaux publics et Services gouvernementaux Canada

REAL PROPERTY SERVICES
Pacific Region
SERVICES IMMOBILIERS
Région de Pacifique

PROFESSIONAL ENGINEER — PROVINCE OF BRITISH COLUMBIA — M. MARKOVIC 28829 — JUL 13 2017

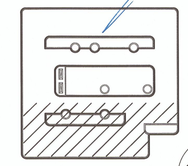

KEY PLAN
N.T.S.

Revision/ Revision	Description/Description	Date/Date
5		
4		
3	ISSUED FOR TENDER	2017-07-13
2	ISSUED FOR 100 % CD	2017-05-09
1	PRE-TENDER CD FOR CLIENT REVIEW	2017-04-05
0	50 % REVIEW	2017-03-03

Client/client
CANADIAN FOOD INSPECTION AGENCY

Project title/Titre du projet
3155 WILLINGDON GREEN BURNABY, BC

CFIA EXHAUST MANIFOLD SYSTEM

Consultant Signature Only

Designed by/Concept par
MM

Drawn by/Dessine par
SE

PWGSC Project Manager/Administrateur de Projets TPSGC

Regional Manager, Architectural and Engineering Services Gestionnaire régional, Services d'architectural et de génie, TPSGC

Drawing title/Titre du dessin
SOUTH PENTHOUSE AND PARTIAL ROOF PLAN - NEW CONSTRUCTION

Project No./No. du projet	Sheet/ Feuille	Revision no./ La Révision no.
39903-150591	M-211 OF 12	3

PWGSC – A1 – 841X594

0 10 20 30 40 50 60 70 80 90 100mm

DM5XXXXXX

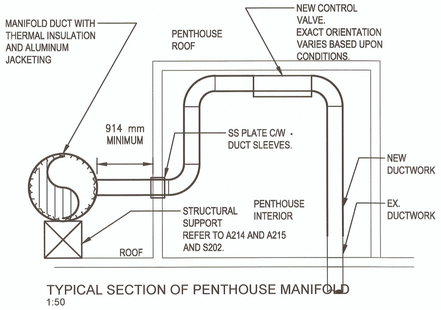

TYPICAL SECTION OF PENTHOUSE MANIFOLD
1:50

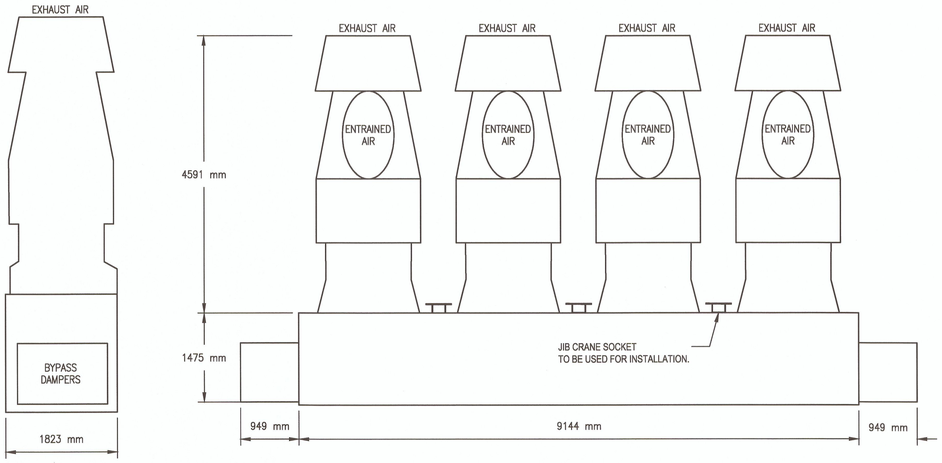

DIMENSIONS OF PLUME DILUTION EXHAUST FAN
1:50

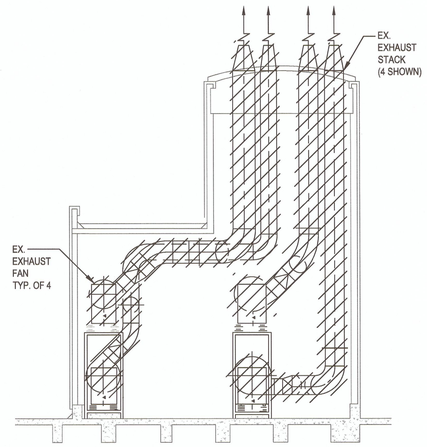

TYP. EXHAUST STACK DEMOLITION
1:50

NOTES:
- REFER TO SHEETS M-204, M-206, M-208, & M-210 FOR INFORMATION ON EXHAUST FANS SCHEDULED FOR REMOVAL.
- EX. EXHAUST FANS SCHEDULED FOR REMOVAL ARE TO HAVE ALL OUTLET DUCTWORK, AND ASSOCIATED EXHAUST STACK, REMOVED.
- CONTRACTOR IS TO PATCH AND MAKE GOOD ANY OPENINGS MADE BY THE REMOVAL OF EXISTING EXHAUST STACKS.

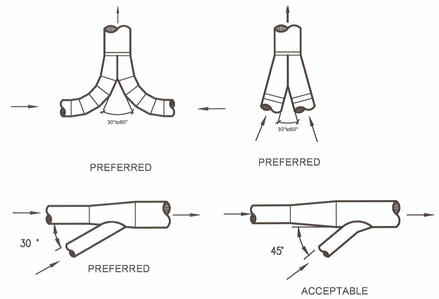

BRANCH ENTRY

PRINCIPLES OF DUCT CONSTRUCTION
N.T.S.

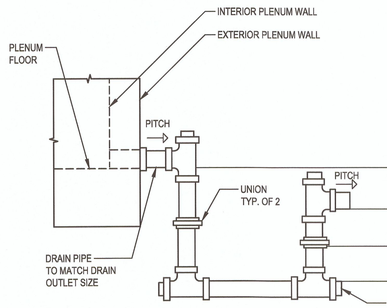

NOTES:
1. ALLOW SUFFICIENT SPACE BELOW THE PLENUM FLOOR FOR TRAP.
2. PITCH DRAIN FOR PROPER RUNOFF.
3. MANUALLY PRIME FILL TRAP BEFORE START-UP TO FORM INITIAL DRAIN SEAL.
4. SUPPORT LENGTHY DRAIN LINES TO PREVENT SAG AND CONDENSATE OVERFLOW.

A) THIS DIMENSION IN INCHES MUST BE GREATER THAN THE MAXIMUM FAN SUCTION STATIC PRESSURE IN INCHES WC (WITH DIRTY FILTERS, COILS, AND MAXIMUM AIR FLOW).
B) THIS DIMENSION IN INCHES MUST BE GREATER THAN 1/2 OF THE SAME MAXIMUM FAN SUCTION STATIC PRESSURE IN INCHES WC.
C) 1" WATER SEAL

TYP. PLENUM DRAIN DETAIL
NTS

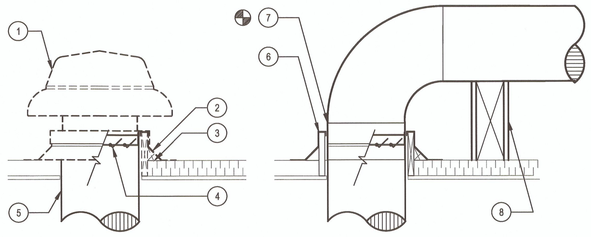

1. EXISTING EXHAUST FAN FOR REMOVAL
2. REMOVE EXISTING FLASHING AND COUNTERFLASHING
3. REMOVE EXISTING CURB.
4. REMOVE AND REINSTALL EXISTING BACKDRAFT DAMPER.
5. EXISTING EXHAUST DUCT TO REMAIN.
6. PROVIDE FLASHING, COUNTERFLASHING AND NEW ROOF CURB 305 mm ABOVE ROOF.
7. PROVIDE STAINLESS STEEL DUCT (SIZE AS SPECIFIED).
8. PROVIDE STRUCTURAL SUPPORT. REFER TO ARCHITECTURAL (A214) FOR DETAILS.

TYP. ROOF EXHAUST FAN REMOVAL AND NEW CONNECTION
N.T.S.

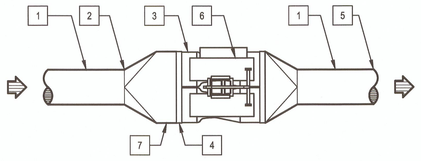

1. NEW SECTION OF DUCTWORK MATCHING SIZE OF EXISTING.
2. TRANSITION FROM ROUND TO RECTANGULAR DUCT (IF NECESSARY).
3. DOUBLE CONTROL VALVE ASSEMBLY.
4. RECTANGULAR FLANGE.
5. DUCT TO PLUME DILUTION EXHAUST MANIFOLD.
6. ELECTRONIC CONTROLS. ALLOW 356 mm AROUND VALVE FOR ACCESS.
7. ALLOW FOR MINIMUM 171 mm UNOBSTRUCTED SPACE ON INLET SIDE OF VALVE. REFER TO MANUFACTURER'S DOCUMENTATION FOR EXACT REQUIREMENTS.

TYP. DOUBLE CONTROL VALVE CONNECTION
N.T.S.

Public Works and Government Services Canada
Travaux publics et Services gouvernementaux Canada
REAL PROPERTY SERVICES
Pacific Region
SERVICES IMMOBILIERS
Région de Pacifique

PROFESSIONAL ENGINEER PROVINCE OF BRITISH COLUMBIA M. MARKOVIC 24829
JUL 13 2017

5		
4		
3	ISSUED FOR TENDER	2017-07-13
2	ISSUED FOR 100 % CD	2017-05-09
1	PRE-TENDER CD FOR CLIENT REVIEW	2017-04-05
0	50 % REVIEW	2017-03-03
Revision/ Révision	Description/Description	Date/Date

Client/client
CANADIAN FOOD INSPECTION AGENCY

Project title/Titre du projet
3155 WILLINGDON GREEN BURNABY, BC

CFIA EXHAUST MANIFOLD SYSTEM

Consultant Signature Only

Designed by/Concept par
MM

Drawn by/Dessine par
SE

PWGSC Project Manager/Administrateur de Projets TPSGC

Regional Manager, Architectural and Engineering Services, Gestionnaire régionale, Services d'architectural et de génie, TPSGC

Drawing title/Titre du dessin
TYPICAL INSTALLATION DETAILS

Project No./No. du projet	Sheet/Feuille	Revision no./ Lo. Révision no.
39903-150591	M-212 OF 12	3

PWGSC – A1 – 841X594

0 10 20 30 40 50 60 70 80 90 100mm

DM5XXXXXX

LEGEND:

DISCONNECT SWITCH

FUSED DISCONNECT SWITCH

BREAKER

TRANSFORMER

PANEL

MCC # — MOTOR CONTROL CENTRE

CONDUIT UP

CONDUIT DOWN

NORTH — NORTH ARROW

A / E2.01 — SECTION MARKER

ABBREVIATIONS (USE AS APPLICABLE):

AFF	ABOVE FINISHED FLOOR
AHU	AIR HANDLING UNIT
AWG	AMERICAN WIRE GAUGE
BKR	BREAKER
C	CONDUIT
CCT	CIRCUIT
CEC	CANADIAN ELECTRICAL CODE
CLG	CEILING
COMM	COMMUNICATIONS
CP	CONTROL PANEL
C/W	COMPLETE WITH
EF	EXHAUST FAN
ELEC	ELECTRICAL
EM	EMERGENCY POWER
EX	EXISTING
FA	FIRE ALARM
FACP	FIRE ALARM CONTROL PANEL
GND	GROUND
JB	JUNCTION BOX
KCMIL	THOUSAND CIRCULAR MILS
LGT	LIGHTING
LV	LOW VOLTAGE
MCB	MAIN CIRCUIT BREAKER
MGB	MAIN GROUND BAR
NIC	NOT IN CONTRACT
NL	NIGHT LIGHT
NTS	NOT TO SCALE
PNL	PANEL
RAP	REMOTE ALARM PANEL
STEF	STROBIC TRISTACK EXHAUST FAN
U/G	UNDERGROUND
WP	WEATHERPROOF
XFMR	TRANSFORMER

LIGHTING, POWER AND FIRE ALARM LEGEND:

120V, 1ø DIRECT CONNECTION

208V, 3ø DIRECT CONNECTION

600V, 3ø DIRECT CONNECTION

DISCONNECT SWITCH

MOTOR C/W DISCONNECT SWITCH

MOTOR

T — HEAT DETECTOR RATE OF RISE 57°C

P — SMOKE DETECTOR (PHOTOELECTRIC)

LIGHTING FIXTURE

GENERAL NOTES:

1. ENSURE THAT A MINIMUM DISTANCE OF 1.5m IS MAINTAINED BETWEEN ANY ELECTRICAL EQUIPMENT. IF THIS IS NOT POSSIBLE, NOTIFICATION MUST BE MADE TO THE DEPARTMENT REPRESENTATIVE.
2. CONTRACTOR TO PROVIDE ALL MATERIALS, MANPOWER, LIFTING DEVICES, TRANSPORTATION, AND OTHER ANCILLARIES TO MAKE A COMPLETE JOB OF THE PROJECT AS DEFINED IN THESE DRAWINGS.
3. CONTRACTOR SHALL VERIFY ALL MEASUREMENTS ON SITE AND WITH MANUFACTURER.
4. EQUIPMENT SHALL BE CONTRACTOR SUPPLIED AND INSTALLED UNLESS EXPLICITLY STATED OTHERWISE.
5. RECYCLE ALL DEMOLISHED MATERIALS IN ACCORDANCE WITH DEPARTMENT REPRESENTATIVE GUIDELINES.
6. ALL PENETRATIONS WITHIN A FIRE RATED ASSEMBLY TO BE SEALED WITH CSA LISTED FIRESTOP.

DETAILS:

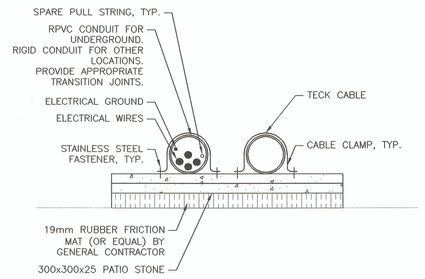

1 CONDUIT AND CABLE SUPPORT ON ROOF DETAIL
NTS

Public Works and Government Services Canada / Travaux publics et Services gouvernementaux Canada

REAL PROPERTY SERVICES
Pacific Region
SERVICES IMMOBILIERS
Région de Pacifique

PROFESSIONAL ENGINEER — PROVINCE OF BRITISH COLUMBIA — R. M. DIMANNO

JULY 13, 2017

Revision/ Revision	Description/Description	Date/Date
2	ISSUED FOR TENDER	2017/07/13
1	ISSUED FOR 100% CD	2017/05/09
0	PRE-TENDER CD FOR CLIENT REVIEW	2017/04/25

Client/client

CANADIAN FOOD INSPECTION AGENCY

Project title/Titre du projet

3155 WILLINGDON GREEN
BURNABY, BC

CFIA
AHU AND EXHAUST MANIFOLD SYSTEM REPLACEMENT

Consultant Signature Only
RD

Designed by/Concept par
AR

Drawn by/Dessine par
SJ

PWGSC Project Manager/Administrateur de Projets TPSGC

Regional Manager, Architectural and Engineering Services
Gestionnaire régionale, Services d'architectural et de génie, TPSGC

Drawing title/Titre du dessin

ELECTRICAL GENERAL NOTES, LEGENDS AND DETAILS

Project No./No. du projet	Sheet/Feuille	Revision no./ La Révision no.
39903-150591	E.0.01 OF	2

PWGSC – A1 – 841X594

0 10 20 30 40 50 60 70 80 90 100mm

REFERENCE NOTES

1. EXISTING AHUS AND PUMPS LISTED WILL BE REMOVED. DISCONNECT THE FEEDERS TO THE EQUIPMENT IDENTIFIED, PULL BACK WIRES TO THE SOURCE, REMOVE EMPTY CONDUITS AND LABEL BREAKERS FEEDING THE EQUIPMENT AS 'SPARE'.
2. EXISTING PANEL 2D4a TO BE REMOVED AND REPLACED. DISCONNECT THE FEEDERS TO THE EQUIPMENT IDENTIFIED AND REMOVE THE EXISTING PANEL AND FEEDER FROM PANEL 2D4. NEW PANEL 2D4a TO BE INSTALLED IN SAME LOCATION. REFER TO DWG. E.1.02 FOR EXACT LOCATION AND DETAILS.
3. EXISTING HUMIDIFIERS FOR AHU-101 AND AHU-102 WILL BE REMOVED. DISCONNECT THE FEEDERS TO THE EQUIPMENT IDENTIFIED, PULL BACK WIRES TO THE SOURCE, REMOVE EMPTY CONDUITS AND LABEL BREAKERS FEEDING THE EQUIPMENT AS 'SPARE'.

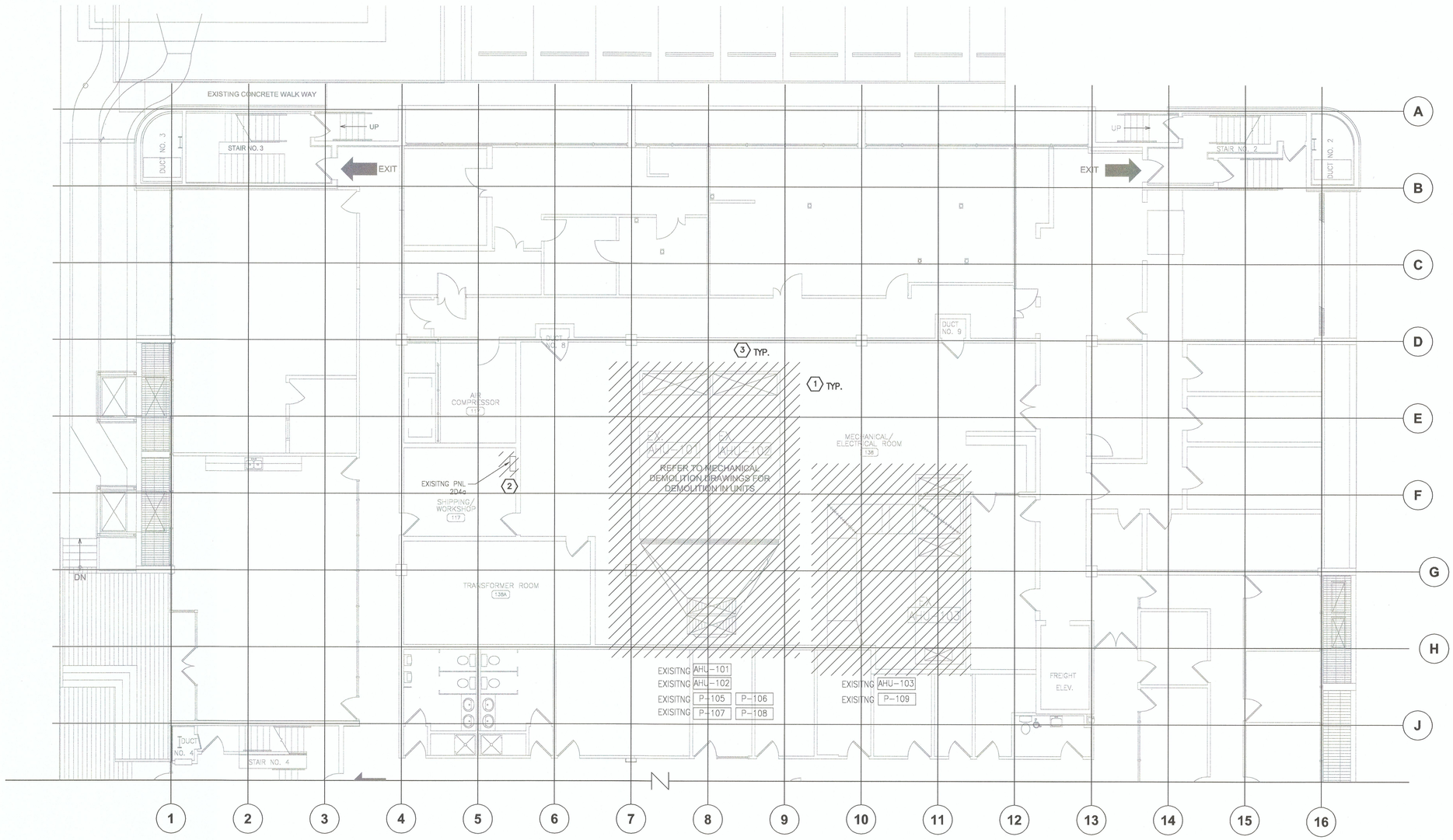

1 GROUND FLOOR DEMOLITION LAYOUT
SCALE 1 : 100

0 10 20 30 40 50 60 70 80 90 100mm

PWGSC – A1 – 841X594

Public Works and Government Services Canada / Travaux publics et Services gouvernementaux Canada

REAL PROPERTY SERVICES
Pacific Region
SERVICES IMMOBILIERS
Région de Pacifique

PROFESSIONAL ENGINEER PROVINCE OF BRITISH COLUMBIA R. M. DIMARNO # 44432

JULY 13, 2017

Revision/ Revision	Description/Description	Date/Date
2	ISSUED FOR TENDER	2017/07/13
1	ISSUED FOR 100% CD	2017/05/09
0	PRE-TENDER CD FOR CLIENT REVIEW	2017/04/25

Client/client

CANADIAN FOOD INSPECTION AGENCY

Project title/Titre du projet
3155 WILLINGDON GREEN BURNABY, BC

CFIA AHU AND EXHAUST MANIFOLD SYSTEM REPLACEMENT

Consultant Signature Only
RD

Designed by/Concept par
AR

Drawn by/Dessine par
SJ

PWGSC Project Manager/Administrateur de Projets TPSGC

Regional Manager, Architectural and Engineering Services
Gestionnaire régionale, Services d'architectural et de génie, TPSGC

Drawing title/Titre du dessin

GROUND FLOOR DEMOLITION LAYOUT

Project No./No. du projet	Sheet/ Feuille	Revision no./ La Révision no.
39903-150591	E.1.01 OF	2

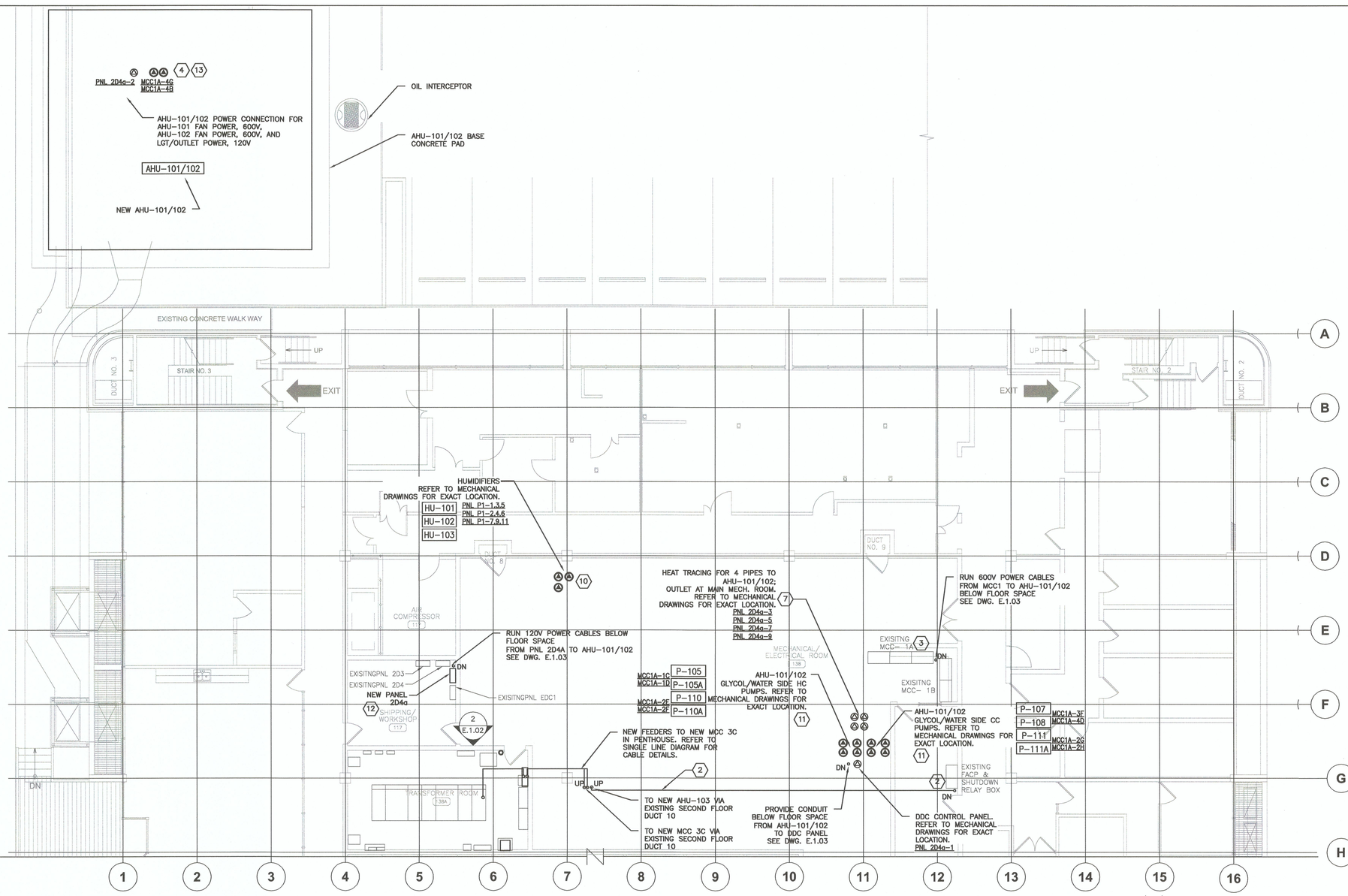

1 GROUND FLOOR POWER LAYOUT
SCALE 1: 100

REFERENCE NOTES:

1. PROPOSED PANELBOARD P1.
2. PROVIDE CONDUIT AND WIRING FOR FIRE ALARM SHUT DOWN TO NEWLY INSTALLED AHU-103 FROM EXISTING SHUT DOWN RELAY BOX ABOVE FACP TO NEW MCC-3C. REFER TO MECHANICAL DRAWINGS FOR SEQUENCE OF OPERATION OF AHU-103.
3. EXISTING CONTROL WIRING FOR EXISTING AHU-101/102 SHOULD BE DISCONNECTED FROM EXISTING BREAKERS OF AHU-101, AHU-102 AND CONNECTED TO NEW AHU-101 AND AHU-102 BREAKERS.
4. REFER TO DWG. E.1.03 FOR CABLE ROUTING TO AHU-101/102 VIA CRAWL SPACE AND TRENCH.
5. POWER CABLE CONNECTION BETWEEN SWITCHBOARD AND NEW PANELBOARD P1. NOTIFY DEPARTMENT REPRESENTATIVE IF CABLE LENGTH MORE THAT 7.5M PRIOR TO INSTALLATION.
6. POWER CABLE FROM PANELBOARD P1 TO NEW MCC-3C IN MAIN PENTHOUSE ELECTRICAL ROOM. (SEE DWG. E.1.05)
7. PROVIDE AND INSTALL 4 RUNS OF 1.8 kW HEAT TRACE FOR HOT WATER SUPPLY AND RETURN PIPING.
8. RELOCATE EXISTING FIRE EXTINGUISHER TO SHOWN LOCATION PRIOR TO INSTALL NEW PANELBOARD P1.
9. REMOVE AND RE-INSTALL ELECTRICAL ROOM MAIN DOOR ACCESS TO DOOR OPEN TOWARD OUTSIDE OF ELECTRICAL ROOM.
10. HUMIDIFIERS. PROVIDE CIRCUIT BREAKERS IN PANELBOARD P1 FOR NEW HUMIDIFIERS AND CONDUIT AND WIRING CONNECTION BETWEEN. PANELBOARD P1 AND HUMIDIFIERS.
11. INSTALL VFD. PROVIDE AND INSTALL POWER FEEDER CONNECTION. LOCATION OF VFDS SHALL BE APPROXIMATELY 3M TO TERMINAL EQUIPMENT.
12. PROVIDE AND INSTALL NEW REPLACED PANELBOARD 2D4a AND ALL WIRING. CONTRACTOR TO MIGRATE EXISTING CIRCUITS TO NEW REPLACED PANELBOARD.
13. BASED ON THE ASSUMPTION THAT ALL WIRINGS BETWEEN INCOMING DISCONNECTION POINTS AND VFD, VFD TO MOTOR IN FACTOR INSTALLED UNIT ARE FACTORY INSTALLED, ELECTRICAL CONTRACTOR TO ONLY PROVIDE WIRING TO INCOMING DISCONNECT.

GENERAL NOTES:

1. SEE DWG. E.5.01 FOR ELECTRICAL POWER AND CONTROL DETAIL CONNECTION INFORMATION.
2. SEE DWG. E.2.01 FOR MCC BREAKER CONFIGURATION INFORMATION.
3. SEE DWG. E.2.02 FOR PANEL SCHEDULE.
4. PROVIDE JUNCTION BOXES/PULL BOXES AS REQUIRED BY CEC 2015.
5. LOW VOLTAGE CONTROL WIRING FOR MECHANICAL EQUIPMENT CONTROL IN NOT PART OF THIS CONTRACT.

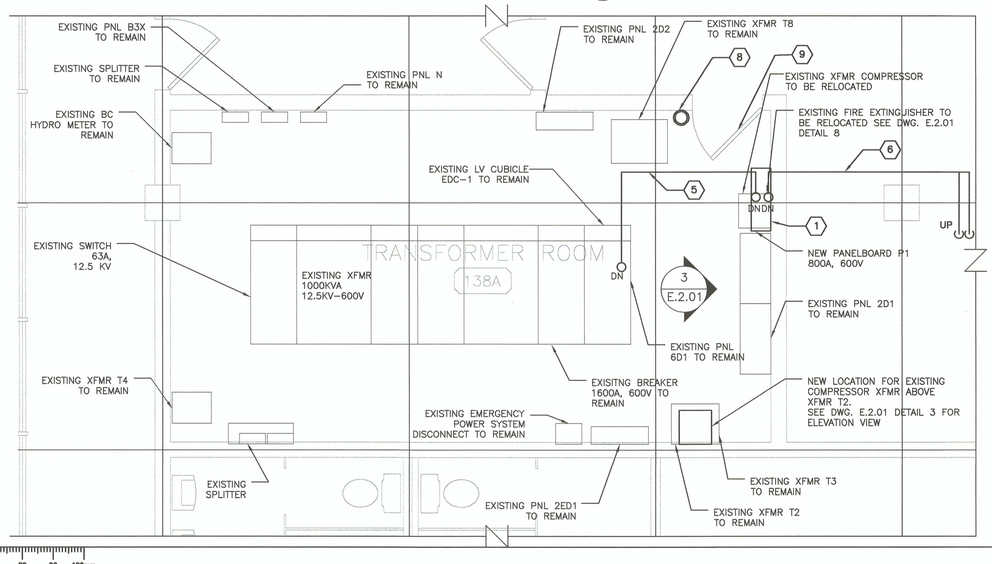

2 TRANSFORMER ROOM 138A LAYOUT
SCALE 1 : 40

0 10 20 30 40 50 60 70 80 90 100mm

PWGSC – A1 – 841X594

Public Works and Government Services Canada / Travaux publics et Services gouvernementaux Canada

REAL PROPERTY SERVICES
Pacific Region
SERVICES IMMOBILIERS
Région de Pacifique

PROFESSIONAL ENGINEER PROVINCE OF BRITISH COLUMBIA
R.M.DIMAANO
44432
JULY 13, 2017

2	ISSUED FOR TENDER	2017/07/13
1	ISSUED FOR 100X CD	2017/05/09
0	PRE-TENDER CD FOR CLIENT REVIEW	2017/04/05
Revision/ Revision	Description/Description	Date/Date

Client/client

CANADIAN FOOD INSPECTION AGENCY

Project title/Titre du projet
3155 WILLINGDON GREEN BURNABY, BC

CFIA AHU AND EXHAUST MANIFOLD SYSTEM REPLACEMENT

Consultant Signature Only
RD

Designed by/Concept par
AR

Drawn by/Dessine par
SJ

PWGSC Project Manager/Administrateur de Projets TPSGC

Regional Manager, Architectural and Engineering Services
Gestionnaire régionale, Services d'architectural et de génie, TPSGC

Drawing title/Titre du dessin

GROUND FLOOR POWER LAYOUT

Project No./No. du projet	Sheet/ Feuille	Revision no./ La Révision no.
39903-150591	E.1.02 OF	2

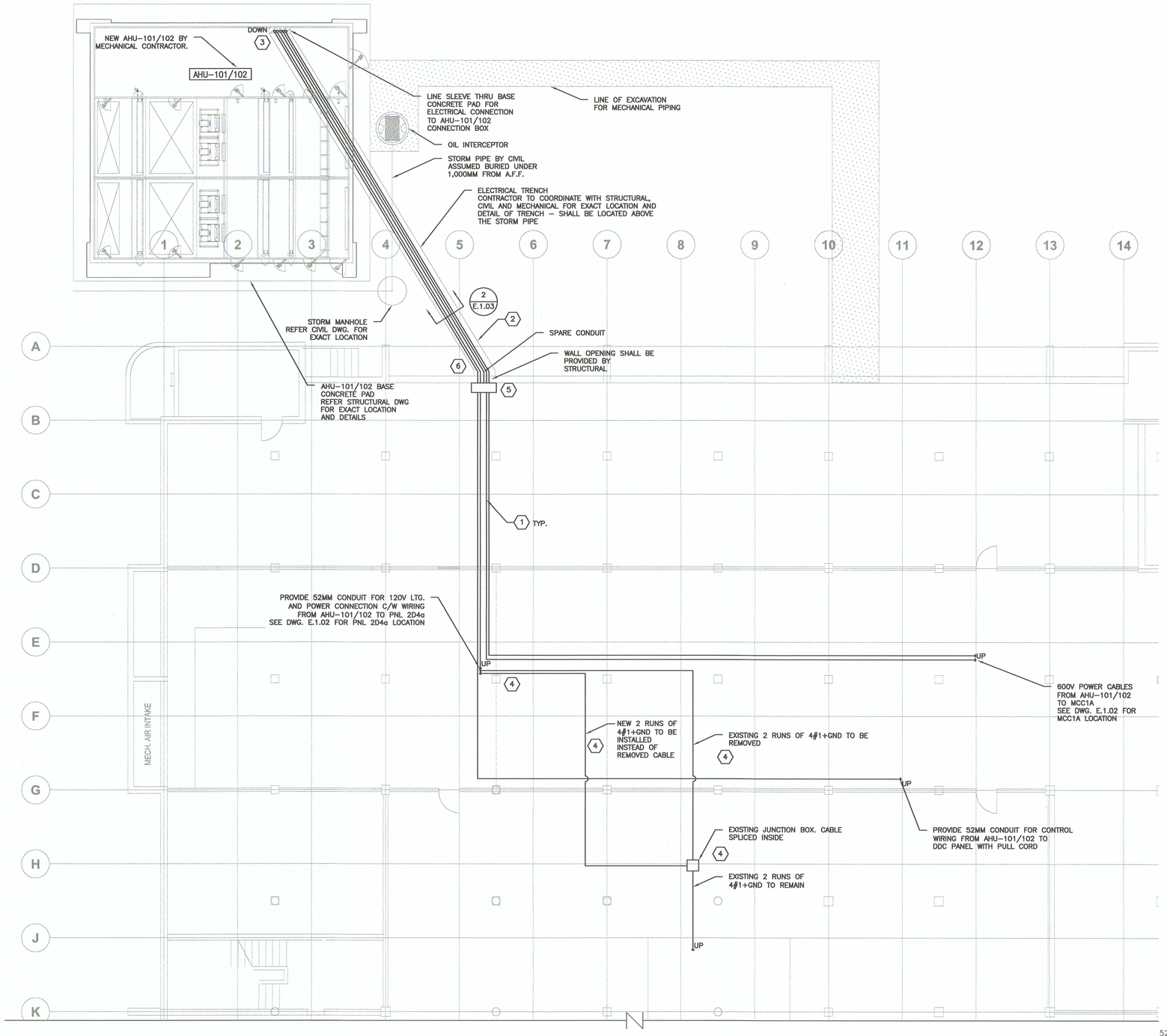

1 CRAWL SPACE POWER LAYOUT
SCALE 1: 100

REFERENCE NOTES:

1. ROUTING FOR CABLE AND CONDUIT PROVIDE JUNCTION BOXES/PULL BOXES AS REQUIRED BY CEC 2015; CABLE AND CONDUIT SHALL BE SUPPORTED BY UNISTRUT SUPPORT MOUNTED ON CRAWL SPACE CEILING.
2. RUN THE FOLLOWING CABLES TO AHU-101/102 VIA CRAWL SPACE AND TRENCH (E.1.03 DETAIL 2) :
   - A. 2 RUNS OF POWER TECK CABLES FOR CONNECTION OF AHU101/102 FOR AHU-101 POWER AND AHU-102 POWER. REFER TO SINGLE LINE DIAGRAM FOR DETAILS. (APPROX. 80M)
   - B. 52MM CONDUIT WITH POWER CABLE FOR LIGHTING/RECEPTACLE. REFER TO SINGLE LINE DIAGRAM FOR DETAILS. (APPROX. 55M)
   - C. 52MM SPARE CONDUIT
   - D. 52MM CONDUIT FOR DDC CONTROL CABLES C/W WIRING (APPROX. 75M)
3. PENETRATION FOR POWER AND COMMUNICATION CABLES IN SLAB.
4. ELECTRICAL CONTRACTOR SHALL GET APPROVAL FROM DEPARTMENTAL REPRESENTATIVE FOR POWER SHUT DOWN FOR REPLACING EXISTING CABLE. TO MINIMIZE SHUT DOWN TIME NEW CABLE TO INSTALLED PRIOR POWER SHUT DOWN. All WORK SHOULD BE DONE AFTER REGULAR WORKING HOURS.
5. PROVIDE PULL BOXES ON CRAWL SPACE WALL FOR 600V, 120V AND CONTROLS CABLES.
6. ELECTRICAL CONTRACTOR SHALL PROVIDE PROTECTION FOR CABLES AND CONDUITS IN ELECTRICAL TRENCH THROUGHOUT THE LENGTH WHERE DEPTH OF THE TRENCH CONDUITS AND CABLES LESS THAN 600MM FROM FINISHED GRADE TO TOP OF THOSE CONDUITS AND CABLES. THE PROVIDED PROTECTION SHALL BE COMPLY WITH CEC 2015 SECTION 12-012.

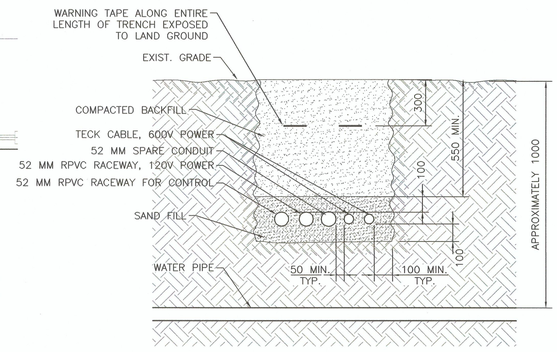

2 TRENCH DETAIL
NTS

PWGSC – A1 – 841X594

0 10 20 30 40 50 60 70 80 90 100mm

Public Works and Government Services Canada / Travaux publics et Services gouvernementaux Canada

REAL PROPERTY SERVICES
Pacific Region
SERVICES IMMOBILIERS
Région de Pacifique

PROFESSIONAL ENGINEER PROVINCE OF BRITISH COLUMBIA
R. M. DIMAANO
JULY 13, 2017

Revision/ Revision	Description/Description	Date/Date
2	ISSUED FOR TENDER	2017/07/13
1	ISSUED FOR 100% CD	2017/05/09
0	PRE-TENDER CD FOR CLIENT REVIEW	2017/04/05

Client/client

CANADIAN FOOD INSPECTION AGENCY

Project title/Titre du projet
3155 WILLINGDON GREEN BURNABY, BC

CFIA AHU AND EXHAUST MANIFOLD SYSTEM REPLACEMENT

Consultant Signature Only
RD

Designed by/Concept par
AR

Drawn by/Dessine par
SJ

PWGSC Project Manager/Administrateur de Projets TPSGC

Regional Manager, Architectural and Engineering Services
Gestionnaire régionale, Services d'architectural et de génie, TPSGC

Drawing title/Titre du dessin

CRAWL SPACE POWER LAYOUT

Project No./No. du projet	Sheet/Feuille	Revision no./ La Révision no.
39903-150591	E.1.03 OF	2

NORTH

REFERENCE NOTES

1. EXISTING EXHAUST FANS LISTED WILL BE REMOVED. DISCONNECT THE FEEDERS TO THE MOTORS IDENTIFIED, PULL BACK WIRES AND REMOVE EMPTY CONDUITS AND LABEL BREAKERS FEEDING THESE EQUIPMENT AS 'SPARE'.
2. EXISTING COOLING TOWER VFDS MOUNTED AT THE LOCATION SHALL BE RELOCATED PRIOR TO THE MCC INSTALLATION. REFER TO DWG E.1.05 FOR NEW VFD LOCATION.
3. EXHAUST FANS LISTED WITHOUT HATCH SHOWN IN DRAWING FOR REFERENCE ONLY AND NOT SUBJECT TO ANY ELECTRICAL WORK.
4. EXISTING INTERLOCK KEY BOX FOR SECURITY TO BE RELOCATED TO NEW EXIT DOOR TO BE INSTALLED. REFER TO E.1.05 FOR DETAIL OF WORK.
5. EXISTING MECHANICAL UNIT HEATER TO BE RELOCATED. ELECTRICAL CONTRACTOR TO DISCONNECT CIRCUIT. COORDINATE WITH MECHANICAL CONTRACTOR FOR EXACT LOCATION. REFER TO E.1.05 FOR DETAIL OF WORK.
6. EF-4 IS LOCATED IN CEILING SPACE AND REMAIN AS EXISTING. EF-4 IS NOT SUBJECT TO ANY ELECTRICAL WORK. LOCATION TO BE VERIFIED ON SITE.

1 PENTHOUSE DEMOLITION PLAN LAYOUT
SCALE 1 : 100

0 10 20 30 40 50 60 70 80 90 100mm

PWGSC – A1 – 841X594

Public Works and Government Services Canada / Travaux publics et Services gouvernementaux Canada

REAL PROPERTY SERVICES
Pacific Region
SERVICES IMMOBILIERS
Région de Pacifique

PROFESSIONAL ENGINEER PROVINCE OF BRITISH COLUMBIA R. M. OMAANG
JULY 13, 2017

Revision/ Revision	Description/Description	Date/Date
2	ISSUED FOR TENDER	2017/07/13
1	ISSUED FOR 100% CD	2017/05/09
0	PRE-TENDER CD FOR CLIENT REVIEW	2017/04/05

Client/client

CANADIAN FOOD INSPECTION AGENCY

Project title/Titre du projet

3155 WILLINGDON GREEN BURNABY, BC

CFIA AHU AND EXHAUST MANIFOLD SYSTEM REPLACEMENT

Consultant Signature Only
RD

Designed by/Concept par
AR

Drawn by/Dessine par
SJ

PWGSC Project Manager/Administrateur de Projets TPSGC

Regional Manager, Architectural and Engineering Services
Gestionnaire régionale, Services d'architectural et de génie, TPSGC

Drawing title/Titre du dessin

PENTHOUSE PLAN DEMOLITION LAYOUT

Project No./No. du projet	Sheet/Feuille	Revision no./ La Révision no.
39903-150591	E.1.04 OF	2

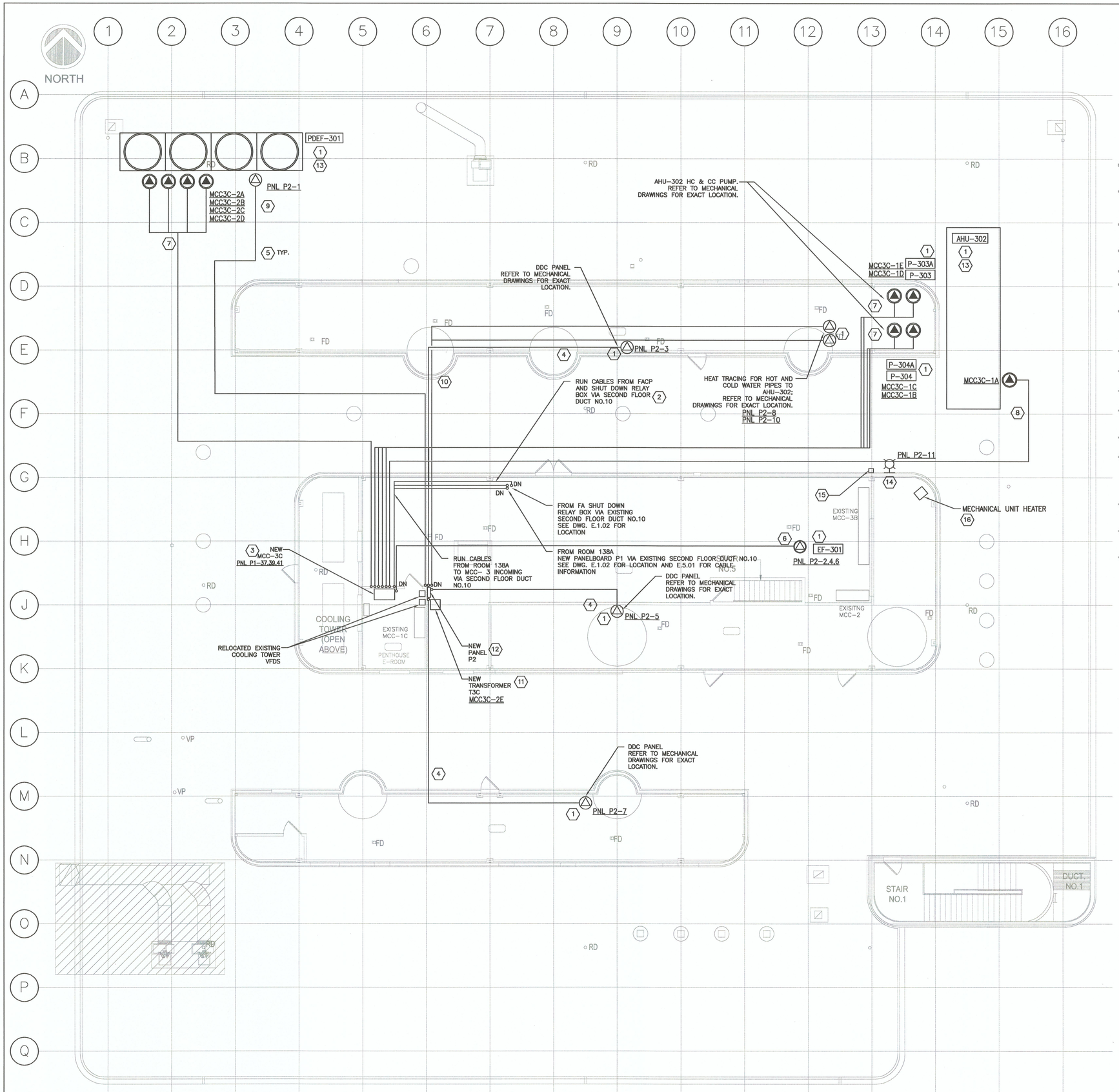

1 PENTHOUSE PLAN POWER LAYOUT
SCALE 1 : 100

0 10 20 30 40 50 60 70 80 90 100mm

PWGSC – A1 – 841X594

GENERAL NOTES:

1. SEE DWG. E.0.01 DETAIL 1 FOR INSTALLATION DETAILS OF CABLE AND CONDUIT. TYP.
2. SEE DWG. E.5.01 FOR ELECTRICAL POWER AND CONTROL DETAIL CONNECTION INFORMATION.
3. SEE DWG. E.2.01 FOR MCC BREAKER CONFIGURATION INFORMATION.
4. SEE DWG. E.2.02 FOR PANEL SCHEDULE.
5. PROVIDE JUNCTION BOXES/PULL BOXES AS REQUIRED BY CEC 2015.
6. LOW VOLTAGE CONTROL WIRING FOR MECHANICAL EQUIPMENT CONTROL IS NOT PART OF THIS CONTRACT.

REFERENCE NOTES:

1. PROVIDE ALL EQUIPMENT POWER CONNECTION TO NEWLY INSTALLED MECHANICAL EQUIPMENT, REFER TO MECHANICAL DRAWINGS FOR EQUIPMENT DETAILS.
2. PROVIDE CONDUIT AND WIRING FOR FIRE ALARM SHUT DOWN TO NEWLY INSTALLED AHU-302 FROM EXISTING SHUT DOWN RELAY BOX ABOVE FACP TO NEW MCC-3C. REFER TO MECHANICAL DRAWINGS FOR SEQUENCE OF OPERATION OF AHU-302.
3. PROPOSED MCC-3C; EXISTING COOLING TOWER VFDS MOUNTED AT THE LOCATION SHALL BE RELOCATED BY CONTRACTOR PRIOR TO THE MCC INSTALLATION.
4. FEEDERS TO DDC PANELS POWER; REFER TO MECHANICAL DRAWINGS FOR EXACT LOCATION.
5. ALL CABLES TO BE RUN ON BUILDING ROOF SURFACE.
6. PROVIDE AND INSTALL CONDUIT AND WIRING FOR NEWLY INSTALLED EF-301. FOR EXACT LOCATION OF MECHANICAL EQUIPMENT, REFER TO MECHANICAL DRAWINGS.
7. ASSIST IN INSTALLATION OF VFDS PROVIDED BY MECHANICAL CONTRACTOR FOR NEWLY INSTALLED MECHANICAL EQUIPMENT AND THEN PROVIDE AND INSTALL POWER FEEDER CONNECTION BETWEEN THOSE EQUIPMENT. REFER TO E.5.01 FOR CABLE SIZE INFORMATION. CABLE LENGTH FROM VFD TO TERMINAL EQUIPMENT SHALL BE MAXIMUM 3 METERS.
8. FEEDERS TO AHU-302 MAIN DISCONNECT; REFER MECHANICAL DRAWINGS FOR EXACT LOCATION.
9. FEEDERS TO CONTROL POWER FOR PDEF-301; REFER MECHANICAL DRAWINGS FOR EXACT LOCATION.
10. FEEDERS TO HEAT TRACES FOR AHU-302; REFER MECHANICAL DRAWINGS FOR EXACT LOCATION.
11. PROPOSED LOCATION FOR NEW TRANSFORMER T3C; PROVIDE AND INSTALL NEW TRANSFORMER, WIRING AND PRIMARY CIRCUIT PROTECTION IN NEW MCC3C.
12. PROPOSED LOCATION FOR NEW PANEL P1; PROVIDE AND INSTALL NEW PANEL AND WIRING.
13. UNLESS OTHERWISE NEWLY INSTALLED MECHANICAL EQUIPMENT IS ALREADY PROVIDED WITH MAINTENANCE RECEPTACLE, PROVIDE AND INSTALL GFCI DUPLEX RECEPTACLE C/W WEATHERPROOF BOX IN RANGE OF 7.5M FROM NEWLY INSTALLED MECHANICAL EQUIPMENT. EXACT LOCATION OF RECEPTACLE TO BE DETERMINED ON SITE BY CONTRACTOR. PROVIDE WIRING FROM PANEL P2 FOR RECEPTACLE. REFER E.2.02 FOR EXACT PANEL SCHEDULE.
14. CONTRACTOR TO PROVIDE AND INSTALL NEW 20W WALL MOUNTED LED WALL PACK FIXTURE AND WIRING TO FIXTURE ON TOP OF NEW EXIT DOOR TO BE INSTALLED. REFER TO ARCHITECTURAL DRAWINGS FOR EXACT LOCATION.
15. CONTRACTOR TO RELOCATE EXISTING SECURITY INTERLOCK KEY BOX AND PROVIDE REWIRING TO THE NEW LOCATION WHERE NEW EXIT DOOR TO BE INSTALLED. REFER TO ARCHITECTURAL DRAWINGS FOR EXACT LOCATION.
16. CONTRACTOR TO ASSIST MECHANICAL CONTRACTOR FOR RELOCATING MECHANICAL UNIT HEATER; EXTEND WIRING TO UNIT HEATER RELOCATED AND ENSURE CIRCUIT CONNECTION AFTER INSTALLATION IS COMPLETE. COORDINATE WITH MECHANICAL CONTRACTOR FOR EXACT LOCATION.

Public Works and Government Services Canada / Travaux publics et Services gouvernementaux Canada

REAL PROPERTY SERVICES
Pacific Region
SERVICES IMMOBILIERS
Région de Pacifique

PROFESSIONAL ENGINEER PROVINCE OF BRITISH COLUMBIA R. M. DIMAANO 18482
JULY 13, 2017

Revision/ Revision	Description/Description	Date/Date
2	ISSUED FOR TENDER	2017/07/13
1	ISSUED FOR 100% CD	2017/05/09
0	PRE-TENDER CD FOR CLIENT REVIEW	2017/04/25

Client/client

CANADIAN FOOD INSPECTION AGENCY

Project title/Titre du projet

3155 WILLINGDON GREEN BURNABY, BC

CFIA AHU AND EXHAUST MANIFOLD SYSTEM REPLACEMENT

Consultant Signature Only
RD

Designed by/Concept par
AR

Drawn by/Dessine par
SJ

PWGSC Project Manager/Administrateur de Projets TPSGC

Regional Manager, Architectural and Engineering Services / Gestionnaire régionale, Services d'architectural et de génie, TPSGC

Drawing title/Titre du dessin

PENTHOUSE PLAN POWER LAYOUT

Project No./No. du projet	Sheet/Feuille	Revision no./ La Révision no.
39903-150591	E.1.05 OF	2

MCC– 1A, 600A, 600V			
1A CHILLER CH–101	2A CHILLED W PUMP P–101	3A VACUUM UNIT V–1	4A PURE HUMIDIFIER
	2B CHILLED W PUMP P–102	3B * 1ST FLOOR AHU–103	
1B * AHU–101	2C CONDENSER W PUMP P–103	3C HAZARD STORAGE AHU–104	4B * RAF–103
1C * UNLABELLED	2D CONDENSER W PUMP P–104		4C * PREHEAT PUMP P–109
1D * UNLABELLED	2E * PREHEAT PUMP P–105	3D CHILLER CH–102	4D * UNLABELLED
1E * EF–001	2F * PREHEAT PUMP P–106		4E UNLABELLED
1F SF–002	2G * HOT DECK PUMP P–107	3E * LAB AHU–102	4F LAB COMPRESSOR 102
1G LAB AIR COMPRESSOR GA–101	2H * HOT DECK PUMP P–108	3F UNLABELLED	4G SPARRE
	2I TRANSFORMER RM SUPPLY SF–001	3G WATER COOLER CU–101	

1 EXISITNG MCC 1A – ELEVATION
NTS

MCC– 1A, 600A, 600V			
1A CHILLER CH–101	2A CHILLED W PUMP P–101	3A VACUUM UNIT V–1	4A PURE HUMIDIFIER
	2B CHILLED W PUMP P–102	3B SPARE	
1B SPARE	2C CONDENSER W PUMP P–103	3C HAZARD STORAGE AHU–104	4B ** AHU–102
1C ** P–105 10HP	2D CONDENSER W PUMP P–104		4C
1D ** P–105A 10HP	2E ** P–110 5HP	3D CHILLER CH–102	4D ** P–108 15 HP
1E SPARE	2F ** P–110A 5HP		4E UNLABELLED
1F SF–002	2G ** P–111 7.5HP	3E SPARE	4F LAB COMPRESSOR 102
1G LAB AIR COMPRESSOR GA–101	2H ** P–111A 7.5HP	3F ** P–107 15 HP	4G ** AHU–101
	2I TRANSFORMER RM SUPPLY SF–001	3G WATER COOLER CU–101	

2 PROPOSED MCC 1A – ELEVATION
NTS

MCC– 3C, 600A, 600V	
1A ** AHU–302	2A ** PDEF–301 F1 40HP
1B ** P–304 2HP	2B ** PDEF–301 F2 40HP
1C ** P–304A 2HP	2C ** PDEF–301 F3 40HP
1D ** P–303 5HP	2D ** PDEF–301 F4 40HP
1E ** P–303A 5HP	2E ** TRANSFORMER T3C 15KVA
1F INCOMING	2F SPARE

3 PROPOSED MCC 3C – ELEVATION
NTS

REMAIN AT EXISTING CONFIGURATION AND LOCATION

MCC– 3B, 600A, 120/208V, 3PH							MCC– 3A, 600A, 600V, 3PH ⟨5⟩	
BR–R PANEL	FDS–60A	⟨3⟩ CONTROLS	SF–304	* EF–316	** AHU–103 PUMP 4	* EF–335	MAIN CB 200A	P–302
	SF–301		* EF–306	* EF–317	* EF–329	* EF–338		P–310
CONTROLS ⟨2⟩	** AHU–103 PUMP 3		* EF–307	* EF–318	* EF–331	* EF–339		P–311
	SF–303		* EF–313	* EF–323	* EF–332	* EF–340	LAB AHU AHU–301	P–303
MANUAL STARTER COMPARTMENT	* EF–352		* EF–314	* EF–325	* EF–333	* EF–342	FORSET DRAFT CT–301	P–304
	EF–302		* EF–315	* EF–327	* EF–334	* EF–344	3KW HEATER CT–301	P–305
							FORSET DRAFT CT–302	SWITCH
							3KW HEATER CT–302	P–308
							P–301	HOV

4 EXISITNG MCC 3A & 3B – ELEVATION
NTS

MCC– 3B, 600A, 120/208V, 3PH ⟨1⟩		
1A BR–R PANEL	2A FDS–60A	3A CONTROLS
	2B SF–301	
1B CONTROLS	2C SPARE	
	2D SF–303	
1C MANUAL STARTER COMPARTMENT	2E SF–304	
	2F EF–302	

5 PROPOSED MCC 3B – ELEVATION
NTS

MCC– 2, 600A, 208V				
* EF–383	SPARE	* EF–312	* EF–326	CONTROLS ⟨4⟩
* EF–384	SPARE	SPARE	* EF–330	
CIRCUIT BREAKER 60A	* EF–305	SPARE	* EF–336	
SPARE	* EF–308	* EF–321	* EF–337	
EF–385	* EF–309	* EF–322	* EF–354	MANUAL STARTER
EF–301	* EF–310	* EF–324	* EF–328	

6 EXISITNG MCC 2 – ELEVATION
NTS

MCC– 2, 600A, 208V ⟨6⟩	
CIRCUIT BREAKER 60A	CONTROLS
SPARE	
SPARE	
SPARE	
EF–385	MANUAL STARTER
EF–301	

7 PROPOSED MCC 2 – ELEVATION
NTS

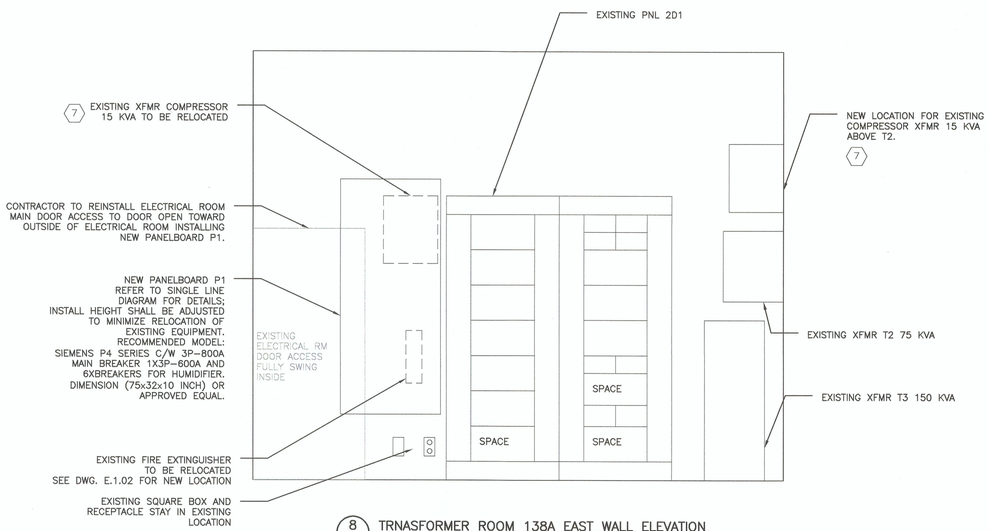

8 TRNASFORMER ROOM 138A EAST WALL ELEVATION
E.1.02 NTS

GENERAL NOTES

1. * : EQUIPMENT SCHEDULED TO BE REMOVED. DISCONNECT THE FEEDERS TO THE MOTORS IDENTIFIED, PULL BACK WIRES AND REMOVE EMPTY CONDUITS. RE–LABEL UNUSED BREAKERS IN ALL LISTED MCCs AS "SPARE"
2. ** : EQUIPMENT SCHEDULED TO BE NEWLY ADDED. PROVIDE POWER CONNECTION AND RE–LABEL UTILIZED BREAKERS IN ALL LISTED MCCs AS NOTED.
3. DISCONNECT FANS EF–311, EF–319, EF–320, EF–349 AND EF–369; PULL BACK WIRES AND REMOVE EMPTY CONDUITS.

REFERENCE NOTES

⟨1⟩ PROVIDE CLEAN UP AND REMOVAL OF UNUSED SECTION OR COMPARTMENT OF MCC–3B.

⟨2⟩ DISCONNECT COMPARTMENT CONNECTIONS AS REFERENCE NOTE * INDICATION DESCRIBING FOR: EF–343, EF–356, EF–357, EF–358, EF–363, EF–374, EF–375, EF–377, EF–379, EF–382, EF–370 AND EF–380.

⟨3⟩ DISCONNECT COMPARTMENT CONNECTIONS AS REFERENCE NOTE * INDICATION DESCRIBING FOR: EF–350, EF–359, EF–362, EF–364, EF–346, EF–353, EF–355, EF–371, EF–348, EF–360, EF–361, EF–381 AND EF–341.

⟨4⟩ DISCONNECT COMPARTMENT CONNECTIONS AS REFERENCE NOTE * INDICATION DESCRIBING FOR: EF–345, EF–351, EF–373, EF–376, EF–378, EF–366, EF–367, EF–368, EF–372, EF–347 AND EF–365.

⟨5⟩ EXISTING MCC–3A SHALL BE REMAINED WITHOUT RELOCATION.

⟨6⟩ PROVIDE CLEAN UP AND REMOVAL OF UNUSED SECTION OR COMPARTMENT OF MCC–2 AND ADJUST PATH OF POWER INCOMING TO MCC–2.

⟨7⟩ COORDINATE REQUIRED SHUTDOWN WITH DEPARTMENTAL REPRESENTATIVE PRIOR TO DISCONNECT FOR RELOCATION.

Public Works and Government Services Canada / Travaux publics et Services gouvernementaux Canada

REAL PROPERTY SERVICES
Pacific Region
SERVICES IMMOBILIERS
Région de Pacifique

PROFESSIONAL ENGINEER PROVINCE OF BRITISH COLUMBIA R. M. BIMANG 23432
JULY 13, 2017

Revision/ Revision	Description/Description	Date/Date
2	ISSUED FOR TENDER	2017/07/13
1	ISSUED FOR 100% CD	2017/05/09
0	PRE–TENDER CD FOR CLIENT REVIEW	2017/04/05

Client/client

CANADIAN FOOD INSPECTION AGENCY

Project title/Titre du projet
3155 WILLINGDON GREEN BURNABY, BC

CFIA AHU AND EXHAUST MANIFOLD SYSTEM REPLACEMENT

Consultant Signature Only
RD

Designed by/Concept par
AR

Drawn by/Dessine par
SJ

PWGSC Project Manager/Administrateur de Projets TPSGC

Regional Manager, Architectural and Engineering Services / Gestionnaire régionale, Services d'architectural et de génie, TPSGC

Drawing title/Titre du dessin

MCC AND E-ROOM ELEVATION

Project No./No. du projet	Sheet/Feuille	Revision no./ La Révision no.
39903-150591	E.2.01 OF	2

PWGSC – A1 – 841X594

0 10 20 30 40 50 60 70 80 90 100mm

NEW PANEL SCHEDULE
"P1"
800A, 347/600V, 3PH, 4W

1	HUMIDIFIER HU-101	80A	80A	HUMIDIFIER HU-102	2
3					4
5					6
7	HUMIDIFIER HU-103	80A	80A	HUMIDIFIER HU-104 (FOR FUTURE)	8
9					10
11					12
13	SPARE	80A		SPACE	14
15				SPACE	16
17				SPACE	18
19	SPACE			SPACE	20
21	SPACE			SPACE	22
23	SPACE			SPACE	24
25	SPACE			SPACE	26
27	SPACE			SPACE	28
29	SPACE			SPACE	30
31	SPACE			SPACE	32
33	SPACE			SPACE	34
35	SPACE			SPACE	36
37	MCC 3C	600A		SPACE	38
39				SPACE	40
41				SPACE	42

800A MAIN

A B C

NEW PANEL SCHEDULE
"P2"
100A, 120/208V, 3PH, 4W

1	PDEF-301 CONTROLS	15A	15A	EF-301 NEW	2
3	AHU-302 DDC PNL #1 CONTROLS	15A			4
5	AHU-302 DDC PNL #2 CONTROLS	15A			6
7	AHU-302 DDC PNL #3 CONTROLS	15A	15A	AHU-302 HEAT TRACE #1	8
9	ROOFTOP MAINTENANCE RECEPTACLE	15A	15A	AHU-302 HEAT TRACE #2	10
11	EXTERIOR LIGHTING	15A	15A	SPARE	12
13	SPARE	15A	15A	SPARE	14
15	SPACE			SPACE	16
17	SPACE			SPACE	18
19	SPACE			SPACE	20
21	SPACE			SPACE	22
23	SPACE			SPACE	24
25	SPACE			SPACE	26
27	SPACE			SPACE	28
29	SPACE			SPACE	30
31	SPACE			SPACE	32

A B C

NEW PANEL SCHEDULE
"2D4a"
100A, 120/208V, 3PH, 4W

1	AHU-101/102 DDC PNL CONTROLS	15A	15A	AHU-101/102 LGT/OUTLET	2
3	AHU-101/102 HEAT TRACE #1	15A	15A	SPARE	4
5	AHU-101/102 HEAT TRACE #2	15A	15A	SPARE	6
7	AHU-101/102 HEAT TRACE #3	25A	15A	SPARE	8
9	AHU-101/102 HEAT TRACE #4	20A	15A	SPARE	10
11	SPARE	15A	15A	MIGRATED CIRCUIT FROM EXIST.	12
13	SPARE	15A	50A	MIGRATED CIRCUIT FROM EXIST.	14
15	SPACE				16
17	SPACE			SPACE	18
19	SPACE			SPACE	20
21	SPACE			SPACE	22
23	SPACE			SPACE	24
25	SPACE			SPACE	26
27	SPACE			SPACE	28
29	SPACE			SPACE	30
31	SPACE			SPACE	32

A B C

Public Works and Government Services Canada / Travaux publics et Services gouvernementaux Canada

REAL PROPERTY SERVICES
Pacific Region
SERVICES IMMOBILIERS
Région de Pacifique

PROFESSIONAL ENGINEER PROVINCE OF BRITISH COLUMBIA LICENSE R. M. DIMAANO
JULY 13, 2017

Revision/ Revision	Description/Description	Date/Date
2	ISSUED FOR TENDER	2017/07/13
1	ISSUED FOR 100% CD	2017/05/09
0	PRE-TENDER CD FOR CLIENT REVIEW	2017/04/05

Client/client

CANADIAN FOOD INSPECTION AGENCY

Project title/Titre du projet

3155 WILLINGDON GREEN
BURNABY, BC

CFIA
AHU AND EXHAUST MANIFOLD SYSTEM REPLACEMENT

Consultant Signature Only
RD

Designed by/Concept par
AR

Drawn by/Dessine par
SJ

PWGSC Project Manager/Administrateur de Projets TPSGC

Regional Manager, Architectural and Engineering Services
Gestionnaire régionale, Services d'architectural et de génie, TPSGC

Drawing title/Titre du dessin

PANEL SCHEDULE

Project No./No. du projet	Sheet/Feuille	Revision no./ La Révision no.
39903-150591	E.2.02 OF	2

PWGSC – A1 – 841X594

0 10 20 30 40 50 60 70 80 90 100mm

GENERAL NOTES:

1. LOAD TEST MUST BE PERFORMED FOR EXISTING MCC AMD PANELS BEFORE CONNECTION OF NEW EQUIPMENT. TEST RESULTS TO BE SENT TO DEPARTMENT REPRESENTATIVE FOR REVIEW PRIOR TO MAKE CONNECTIONS.
2. INSTALL VFD AND PROVIDE AND INSTALL WIRING FROM PANEL TO VFD AND FROM VFD TO MECHANICAL EQUIPMENT. SPECIFYING AND PROVIDING NEW VFD FOR NEW MECHANICAL EQUIPMENT IS NOT PART OF THIS CONTRACT.
3. MEASURE POWER FACTOR OF CFIA ELECTRICAL SYSTEM AFTER INSTALLATION. IF MEASURED POWER FACTOR OF NEW CFIA ELECTRICAL SYSTEM LESS THAN 0.9 REPORT TO DEPARTMENT REPRESENTATIVE FOR CORRECTIVE ACTION.
4. OBTAIN LOAD SHED SCHEME FROM DEPARTMENT REPRESENTATIVE FOR NEW MECHANICAL SYSTEM TO ENSURE SAFE OPERATION OF EMERGENCY GENERATOR IN CASE OF UTILITY POWER OUTAGE.

REFERENCE NOTES:

1. SUPPLY AND INSTALL NEW 3P90A BREAKER FOR AHU–101 AND NEW 3P80A BREAKER FOR AHU–102 IN EXISTING MCC 1A. REFER TO DWG. E.2.01 DETAIL 2.
2. SUPPLY AND INSTALL NEW 2x3P15A BREAKER IN EXISTING MCC 1A. REFER TO DWG. E.2.01 DETAIL 2.
3. SUPPLY AND INSTALL NEW 2x3P20A BREAKER IN EXISTING MCC 1A. REFER TO DWG. E.2.01 DETAIL 2.
4. SUPPLY AND INSTALL NEW 2x3P40A BREAKER IN EXISTING MCC 1A. REFER TO DWG. E.2.01 DETAIL 2.
5. SUPPLY AND INSTALL NEW 2x3P25A BREAKER IN EXISTING MCC 1A. REFER TO DWG. E.2.01 DETAIL 2.
6. NOT IN USE.
7. SUPPLY AND INSTALL NEW 800A, 600V PANEL BOARD. RECOMMENDED MODEL: SIEMENS P4 SERIES C/W 3P800A MAIN BREAKER, 1 X 3P600A AND 6 X 3P80A BREAKERS FOR HUMIDIFIERS. DIMENSION (75 X 32 X 10 INCH) OR APPROVED EQUAL. REFER TO DWG. E.2.02 FOR PANEL SCHEDULE.
8. SUPPLY AND INSTALL A NEW 600A, 600V MCC – MCC 3C. REFER TO DWG E.1.05 FOR EXACT LOCATION AND DWG E.2.01 DETAIL 3 FOR LAYOUT.
9. SUPPLY AND INSTALL NEW 3P15A BREAKER IN NEW MCC 3C FOR EACH P–106, P–106A, P–109 AND P–109A, REFER TO DWG. E.2.01 DETAIL 3.
10. SUPPLY AND INSTALL NEW 3P80A BREAKER IN NEW MCC 3C FOR AHU–103, REFER TO DWG. E.2.01 DETAIL 3.
11. SUPPLY AND INSTALL NEW 3P100A BREAKER IN NEW MCC 3C FOR EACH FAN MOTORS IN PDEF–1, REFER TO DWG. E.2.01 DETAIL 3.
12. SUPPLY AND INSTALL NEW 1P15A BREAKER IN NEW PANEL P2 AND WIRING TO POWER PDEF–1 FOR CONTROL.
13. SUPPLY AND INSTALL NEW 1P15A BREAKER IN NEW PANEL P2 AND WIRING TO POWER EACH DDC PANEL FOR CONTROL.
14. SUPPLY AND INSTALL NEW 3P15A BREAKER IN NEW PANEL P2 FOR EF–12, REFER TO MECHANICAL DRAWING PACKAGE FOR EXACT LOCATION OF EF–12.
15. SUPPLY AND INSTALL NEW 1P15A BREAKER IN NEW PANEL P2 AND WIRING TO POWER EACH HEAT TRACE EQUIPMENT.
16. ELECTRICAL CONTRACTOR TO REMOVE EXIST. PANLE 2D4a AND THEN PROVIDE AND INSTALL NEW 100A, 120/208V PANEL BOARD WITH SPECIFIED NEW CIRCUIT BREAKERS. REFER TO DWG. E.1.02 FOR EXACT LOCATION AND REFER TO E.2.02 FOR PANEL SCHEDULE. RECOMMENDED MODEL: SIEMENS P1 SERIES.
17. CONNECTION FEEDER LENGTH BETWEEN EXISTING MDC AND MAIN BREAKER IN NEW PANEL BOARD P1 SHALL NOT EXCEED MORE THAN 7.5M; ELECTRICAL CONTRACTOR TO VERIFY LENGTH OF FEEDER RUN PRIOR TO INSTALLATION AND NOTIFY DEPARTMENT REPRESENTATIVE IF EXCEEDING.
18. PROVIDE AND INSTALL NEW 15KVA 600–120/208V TRANSFORMER IN CENTRAL PENTHOUSE. REFER TO DWG. E.1.05 FOR EXACT LOCATION.
19. PROVIDE AND INSTALL NEW 100A, 120/208V PANEL BOARD WITH SPECIFIED NEW CIRCUIT BREAKERS. REFER TO DWG. E.1.05 FOR EXACT LOCATION AND REFER TO E.2.02 FOR PANEL SCHEDULE. RECOMMENDED MODEL: SIEMENS P1 SERIES.
20. ELECTRICAL CONTRACTOR TO PROVIDE AND INSTALL NEW 3P–100A BREAKER IN EXISTING PNL 2D4 FOR NEW REPLACED PANEL 2D4a. EXIST. FEEDER FEEDING PREVIOUS 2D4a TO BE REMOVED AND EXIST. BREAKER TO BE LABELED AS 'SPARE' FOR FUTURE USE. MIGRATE EXIST. CIRCUITS TO NEW REPLACED PANEL 2D4a. ELECTRICAL CONTRACTOR SHALL GET APPROVAL FROM CFIA MANAGEMENT FOR POWER SHUT DOWN.
21. SUPPLY AND INSTALL A NEW 3P–15A BREAKER IN NEW MCC–3C FOR 15kVA TRANSFORMER.

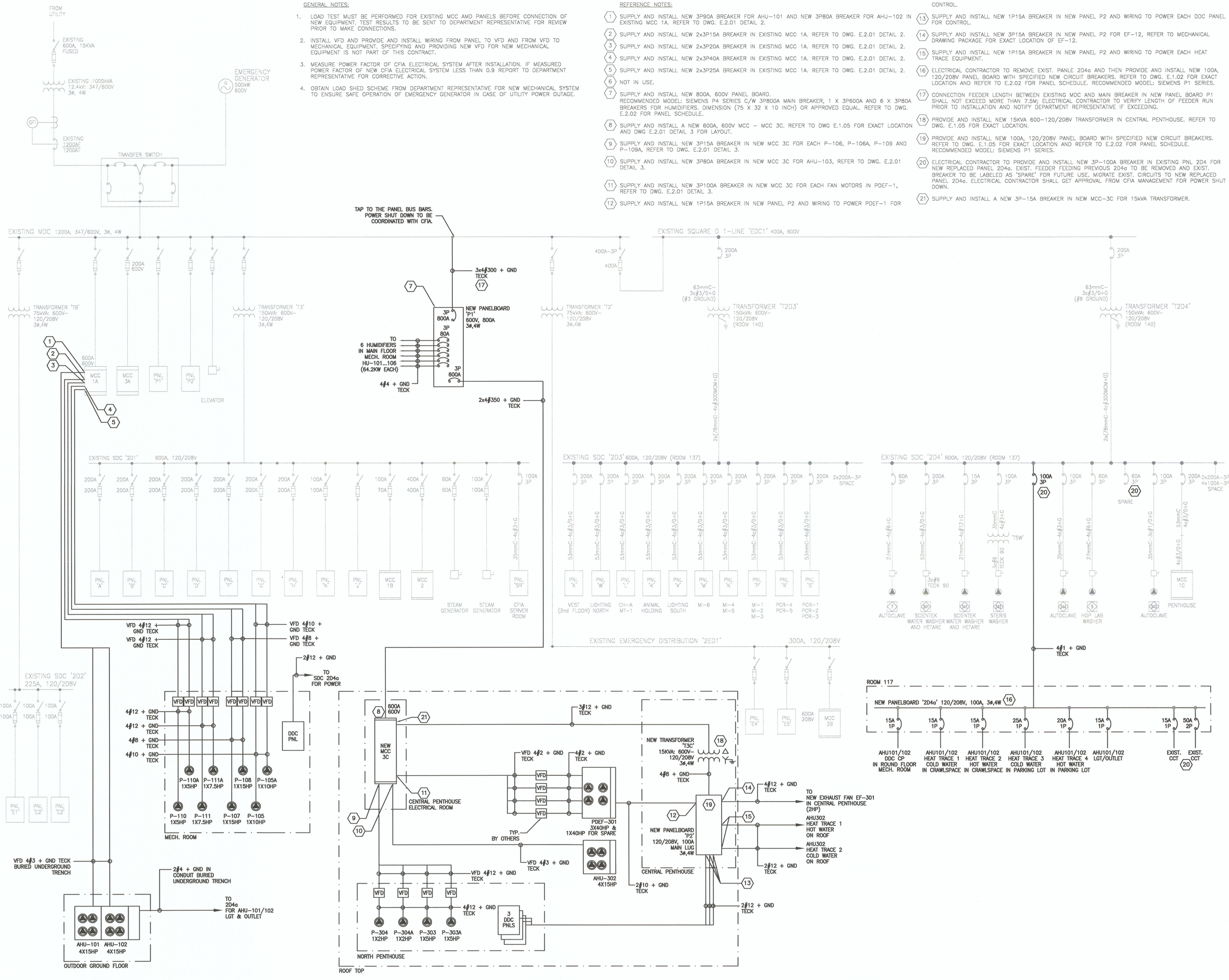

0 10 20 30 40 50 60 70 80 90 100mm

PWGSC – A1 – 841X594

Public Works and Government Services Canada / Travaux publics et Services gouvernementaux Canada

REAL PROPERTY SERVICES
Pacific Region
SERVICES IMMOBILIERS
Région de Pacifique

PROFESSIONAL ENGINEER PROVINCE OF BRITISH COLUMBIA R. M. DIMAANO
JULY 13, 2017

Revision/ Revision	Description/Description	Date/Date
2	ISSUED FOR TENDER	2017/07/13
1	ISSUED FOR 100% CD	2017/05/09
0	PRE–TENDER CD FOR CLIENT REVIEW	2017/04/05

Client/client

CANADIAN FOOD INSPECTION AGENCY

Project title/Titre du projet

3155 WILLINGDON GREEN
BURNABY, BC

CFIA AHU AND EXHAUST MANIFOLD SYSTEM REPLACEMENT

Consultant Signature Only
RD

Designed by/Concept par
AR

Drawn by/Dessine par
SJ

PWGSC Project Manager/Administrateur de Projets TPSGC

Regional Manager, Architectural and Engineering Services
Gestionnaire régionale, Services d'architectural et de génie, TPSGC

Drawing title/Titre du dessin

SINGLE LINE DIAGRAM

Project No./No. du projet	Sheet/Feuille	Revision no./ La Révision no.
39903–150591	E.5.01 OF	2

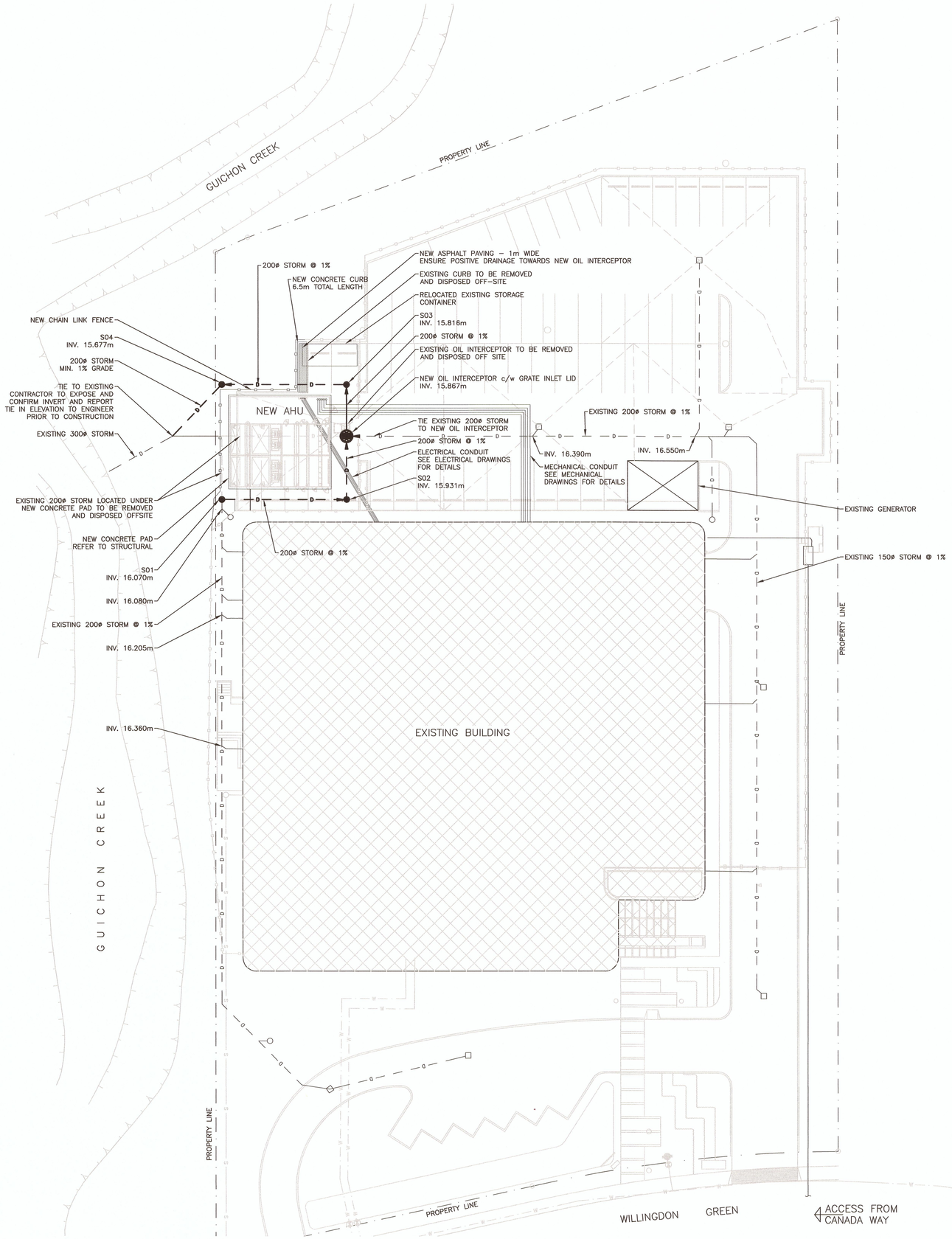

GENERAL NOTES:

1. ALL CONSTRUCTION TO BE IN ACCORDANCE WITH THE SPECIFICATIONS IN THE CONTRACT DOCUMENTS.
2. FIGURED DIMENSIONS SHALL GOVERN OVER SCALED DIMENSIONS.

1 / C101 **CIVIL SITE PLAN** 1:250

NORTH

PWGSC – A1 – 841X594

Public Works and Government Services Canada / Travaux publics et Services gouvernementaux Canada

REAL PROPERTY SERVICES
Pacific Region
SERVICES IMMOBILIERS
Région de Pacifique

PROFESSIONAL ENGINEER
M. E. DOWNING
22000
PROVINCE OF BRITISH COLUMBIA
2017-07-19

Revision/ Revision	Description/Description	Date/Date
5		
4		
3		
2	ISSUED FOR TENDER	2017/07/13
1	ISSUED FOR 100% CD	2017/05/05
0	PRE–TENDER CD FOR CLIENT REVIEW	2017/03/30

Client/client

CANADIAN FOOD INSPECTION AGENCY

Project title/Titre du projet

3155 WILLINGDON GREEN
BURNABY, BC

CFIA
EXHAUST MANIFOLD REPLACEMENT

Consultant Signature Only

Designed by/Concept par

Drawn by/Dessine par
SF 13/03/2017

PWGSC Project Manager/Administrateur de Projets TPSGC
PWGSC-PROJECT_MANAGER

Regional Manager, Architectural and Engineering Services
Gestionnaire régionale, Services d'architectural et de génie, TPSGC
PWGSC-REGIONAL_MANAGER

Drawing title/Titre du dessin

CIVIL SITE PLAN

Project No./No. du projet	Sheet/ Feuille	Revision no./ La Révision no.
39903-150591	**C101**	**2**

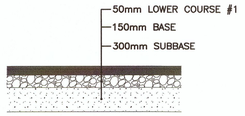

NEW PAVEMENT STRUCTURE
NTS

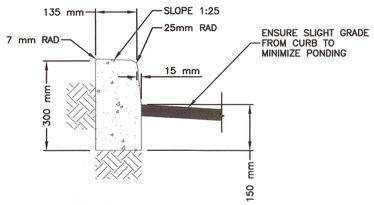

CONCRETE CURB DETAIL
NTS

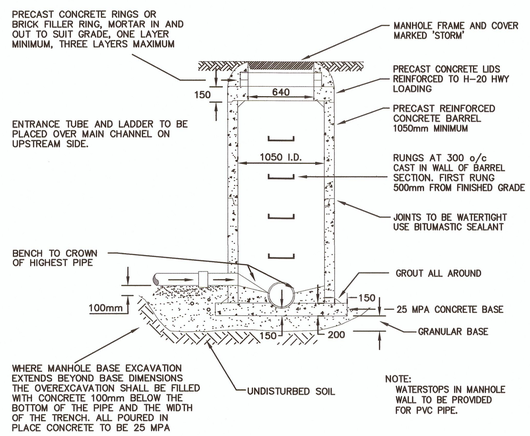

TYPICAL MANHOLE DETAIL
NTS

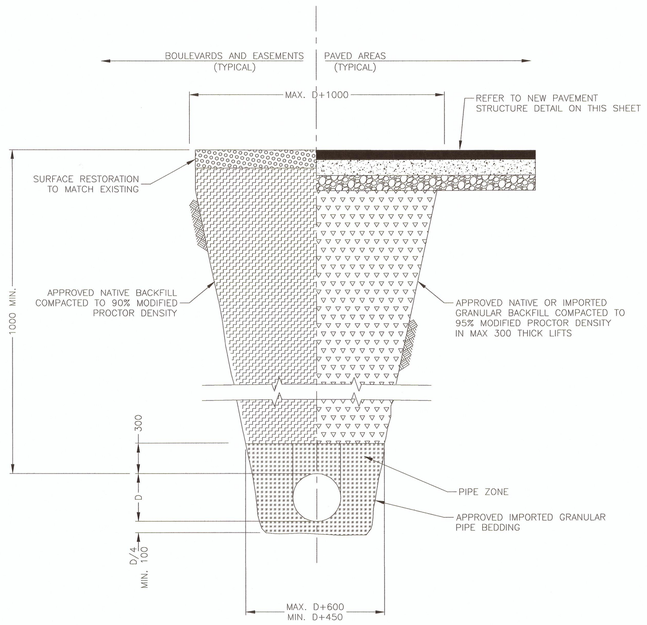

NOTES:

1. TRENCHING TO COMPLY WITH ALL REQUIREMENTS OF THE WORKSAFE BC.

STORM SEWER TRENCH DETAIL
NTS

Public Works and Government Services Canada
Travaux publics et Services gouvernementaux Canada

REAL PROPERTY SERVICES
Pacific Region
SERVICES IMMOBILIERS
Région de Pacifique

PERMISSION TO CONSTRUCT
M.E. DONNING
39906
REGISTERED PROFESSIONAL ENGINEER
2017-07-19

Revision/ Revision	Description/Description	Date/Date
5		
4		
3		
2	ISSUED FOR TENDER	2017/07/13
1	ISSUED FOR 100% CD	2017/05/09
0	PRE-TENDER CD FOR CLIENT REVIEW	2017/03/30

Client/client

CANADIAN FOOD INSPECTION AGENCY

Project title/Titre du projet

3155 WILLINGDON GREEN BURNABY, BC

CFIA EXHAUST MANIFOLD REPLACEMENT

Consultant Signature Only

Designed by/Concept par

Drawn by/Dessine par
SF 13/03/2017

PWGSC Project Manager/Administrateur de Projets TPSGC
PWGSC-PROJECT_MANAGER

Regional Manager, Architectural and Engineering Services
Gestionnaire régionale, Services d'architectural et de génie, TPSGC
PWGSC-REGIONAL_MANAGER

Drawing title/Titre du dessin

CIVIL CONSTRUCTION DETAILS

Project No./No. du projet	Sheet/ Feuille	Revision no./ La Révision no.
39903-150591	C102	2

PWGSC – A1 – 841X594

0 10 20 30 40 50 60 70 80 90 100mm