Public Works and Government Services Canada | Travaux publics et Services gouvernementaux Canada

RETURN BIDS TO:
RETOURNER LES SOUMISSIONS À:

Bid Receiving Public Works and Government Services Canada/Réception des soumissions Travaux publics et Services gouvernmentaux Canada
800 Burrard Street, Room 219
800, rue Burrard, pièce 219
Vancouver
British Columbia
V6Z 0B9
Bid Fax: (604) 775-9381

SOLICITATION AMENDMENT
MODIFICATION DE L'INVITATION

The referenced document is hereby revised; unless otherwise indicated, all other terms and conditions of the Solicitation remain the same.

Ce document est par la présente révisé; sauf indication contraire, les modalités de l'invitation demeurent les mêmes.

Comments - Commentaires

Vendor/Firm Name and Address
Raison sociale et adresse du fournisseur/de l'entrepreneur

Issuing Office - Bureau de distribution

Public Works and Government Services Canada - Pacific Region
800 Burrard Street, Room 219
800, rue Burrard, pièce 219
Vancouver
British C
V6Z 0B9

Title - Sujet Mechanical System Upgrades	
Solicitation No. - N° de l'invitation EZ899-181194/A	**Amendment No. - N° modif.** 005
Client Reference No. - N° de référence du client	**Date** 2017-10-13
GETS Reference No. - N° de référence de SEAG PW-$PWY-020-8179	
File No. - N° de dossier PWY-7-40194 (020)	**CCC No./N° CCC - FMS No./N° VME**
Solicitation Closes - L'invitation prend fin **at - à** 02:00 PM **on - le** 2017-10-20	**Time Zone** **Fuseau horaire** Pacific Daylight Saving Time PDT
F.O.B. - F.A.B. **Plant-Usine:** ☐ **Destination:** ☑ **Other-Autre:** ☐	
Address Enquiries to: - Adresser toutes questions à: Ly, Ronny(PWY)	**Buyer Id - Id de l'acheteur** pwy020
Telephone No. - N° de téléphone (604) 318-5750 ( )	**FAX No. - N° de FAX** (604) 775-6633
Destination - of Goods, Services, and Construction: **Destination - des biens, services et construction:** CSC - Kent Institution - Agassiz, BC	

Instructions: See Herein

Instructions: Voir aux présentes

Delivery Required - Livraison exigée	**Delivery Offered - Livraison proposée**
Vendor/Firm Name and Address **Raison sociale et adresse du fournisseur/de l'entrepreneur** **Telephone No. - N° de téléphone** **Facsimile No. - N° de télécopieur**	
Name and title of person authorized to sign on behalf of Vendor/Firm (type or print) **Nom et titre de la personne autorisée à signer au nom du fournisseur/ de l'entrepreneur (taper ou écrire en caractères d'imprimerie)** **Signature**	**Date**

Canada

LES DOCUMENTS FRANCAIS SERONT DISPONIBLES SUR DEMANDE

AMENDMENT 005

Amendment 005 has been raised to incorporate Addendum No 1.

All other terms and conditions remain unchanged.

THE FOLLOWING CHANGES IN THE TENDER DOCUMENTS ARE EFFECTIVE IMMEDIATELY. THIS ADDENDUM WILL FORM PART OF THE CONTRACT DOCUMENTS.

ADDENDUM #1

1. Refer to Tender Mechanical Drawings M4-01:

1. Revise mechanical equipment room (J&K) HVAC system as shown clouded on the details No. 2, A, B, C and D of the attached drawing

2. Refer to Tender Mechanical Drawings M5-01:

1. Revise mechanical details for AHU-1(Living Unit J) as shown clouded on the attached drawing.

2. Add mechanical details for AHU-2 (Living unit K) as shown clouded on the attached drawing.

3. Existing Ductless Split Systems in Rooms No. J220, K220 and K221. Read in Conjunction with Tender Mechanical Drawings M4-01 Detail No. 1 and M6-01 Schedule for Split System:

1. Replace existing DX Split system in Rooms J220, K220 and K221 with new indoor ductless split system.

   (1) Provide Demolition of existing refrigerant piping.

   (2) Provide new refrigeration piping complete with insulation.

   (3) Run new refrigerant piping up to mechanical rooms J and K, and from mechanical rooms to the roof as shown on the detail No. 1 on the attached drawing M4-01. Allow for approximately a total of 150 meter for each refrigerant Liquid Line and Suction Line.

   (4) Connect new condensate pipe of each indoor units to exiting condensing pipe in the ceiling space.

   (5) Retain existing control sequence and modify to suit the new units. Allow for re-and-re of the existing control wirings to the new split systems.

   (6) Disconnect and demolish existing power cable feeding the condensing unit (CU) of living unit J. Existing CU is fed from living unit J MCC - panel A4X 20A, 208V, 1Ph branch circuit breaker. Source to remain as is. Provide new feeder cable 3#10AWG+G in 21mmC from living unit J MCC to feed the new CU. Condensing unit CU sub-feeds the AC unit inside. Electrical contractor is responsible for the wiring between CU and AC unit. Mechanical contractor is responsible for any control wiring.

(7) Disconnect and demolish existing power cable feeding the condensing unit (CU) of living unit K. Existing CU is fed from living unit K MCC 20A, 208V, 1Ph branch circuit breaker. Source to remain as is. Provide new feeder cable 3#10AWG+G in 21mmC from living unit K MCC to feed the new CU. Condensing unit CU sub-feeds the AC unit inside. Electrical contractor is responsible for the wiring between CU and AC unit. Mechanical contractor is responsible for any control wiring.

4. Refer to Tender Mechanical Drawings M2-01 and Item 3 above:

1. Add demolition of condensing units for J & K building as shown clouded on detail No. 1 on the attached drawing.

5. Read in Conjunction with Drawing M3-05 for Vestibule No. 100, Living Units A to H:

1. Demolish existing cabinet unit heaters in the vestibule (Room # 100) of each Living Units A to H (total of 8). Retain existing piping. Refer to attached Picture No. 4.

2. Provide new recessed cabinet unit heaters (total of 8 units) to fit in the same opening. Provide new isolation valves and connect to existing piping. Repair damaged insulation. Make good of the recessed opening to match existing.

3. Retain existing control valves and sequence of operation. Modify to suit the new units. Allow for re-and-re of the existing control wirings to the new cabinet units heaters.

6. Refer to Tender Mechanical Drawings M6-01:

1. Add mechanical schedule for new split systems and cabinet unit heaters as shown clouded on the attached drawing.

7. Refer to Tender Mechanical Drawings M9-03:

1. Add detail “E” for return air grilles at upper levels of Living Units A to H as shown clouded on the attached drawing.

8. Read in conjunction with Architectural Drawings A4-02:

1. Construction Scope Legend **C2**:

   (1) Clarification- Reference to Detail No. 2 on A012 should read Detail No. 2 on A4-02

2. Clarification: Detail No. 1B on A302 should read Detail No. 1B on A4-02

9. Read in conjunction with Architectural Drawings A4-06:

1. Clarification: Reference to Detail No. 4 on A305 should read Detail No. 4 on A4-06

10. Read in conjunction with Architectural Drawings A4-00 and A4-05, and Plumbing Drawings P3- 00 and P3-03:

1. Add Segregation Room K-215 to the renovation scope (refer to Drawings A4-00 / P3-00 for location of Room K-215). Room K-215 scope of work shall be identical to Staff Washroom J-215 (refer to drawings A4-05 and P3-03 for details).

11. Refer to Tender Specifications Section 22 42 00 subsection 2.7 Showers.

1. Touch Sensor Solenoid Valve and Battery systems: Acceptable Materials shall be "ICON".

2. CLARIFICATION: Wall mount single door (steel) enclosure shall be surface mount type.

3. CLARIFICATION: Secure low-voltage wiring to wall, and run in neat manner parallel to building lines.

Questions Submitted to PSPC

Question # 1

On Mechanical drawing M8-01 there are a number of control valves with designations CV-S_ and CV-__ that are not on the shown on the control valve schedule on mechanical drawing M6-02. Are these to be replaced and if so what are the specifications for them?

ANSWER # 1:

Drawing M8-01 is for Isolation Valves Replacement/Addition part of the work. Controls valves referred to are not in scope of this project.

Question # 2

Request for equal:

Air Handling Unit: Specified Haakon, Request for Equal: Ventus VTS
Air Handling Unit: Specified Trane, Request for Equal: First Company
Hot Water Reheat Coils: Request for Equal: Direct Coils
Wall Fin Heaters: Request for Equal: Sigma
Hot Water Unit Heaters: Request for Equal: Sigma
Fan Coils: First Company

ANSWER # 2:

Air Handling Unit - Ventus VTS: Not Acceptable
Air Handling Unit (AHU-3) First Company: Acceptable
Hot Water Reheat Coils- Direct Coils: Acceptable
Wall Fin Heaters- Sigma: Acceptable
Hot Water Unit Heaters- Sigma: Acceptable
Fan Coils- First Company: Fan-coils not in scope of this project.

Acceptable material should meet or be better than specified in contract documents.

Question # 3

Request for equal:

Air Handling Unit- Request for Equal: Scott Springfield Custom Air Handling
Air Handling Unit -Request for Equal: Daikin Vision Semi-Custom Air Handling

ANSWER # 3:

Air Handling Unit - Scott Springfield: Not Acceptable
Air Handling Unit – Daikin Vision: Not Acceptable

END OF ADDENDUM #1

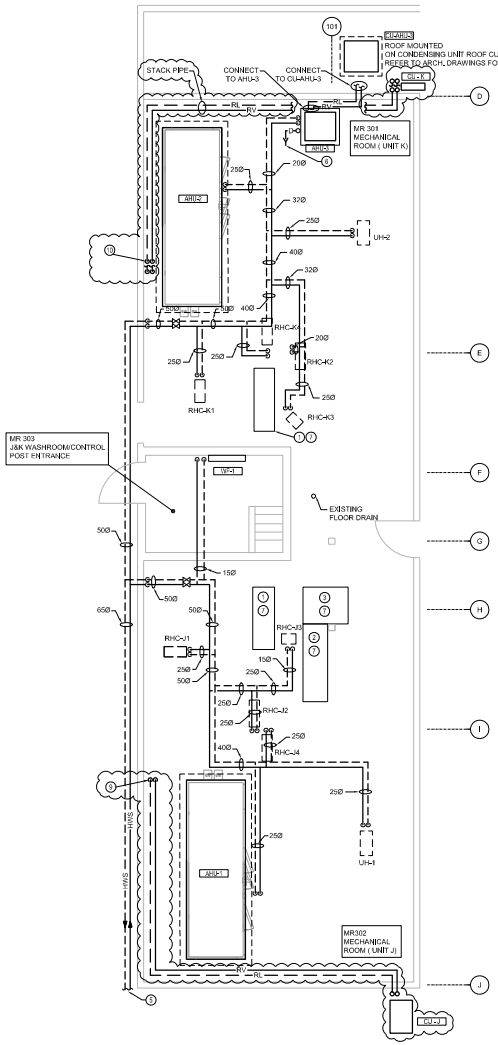

1 EQUIPMENT ROOM-HYDRONIC & REFRIGERANT SYSTEM (RENO)
SCALE: 1:50

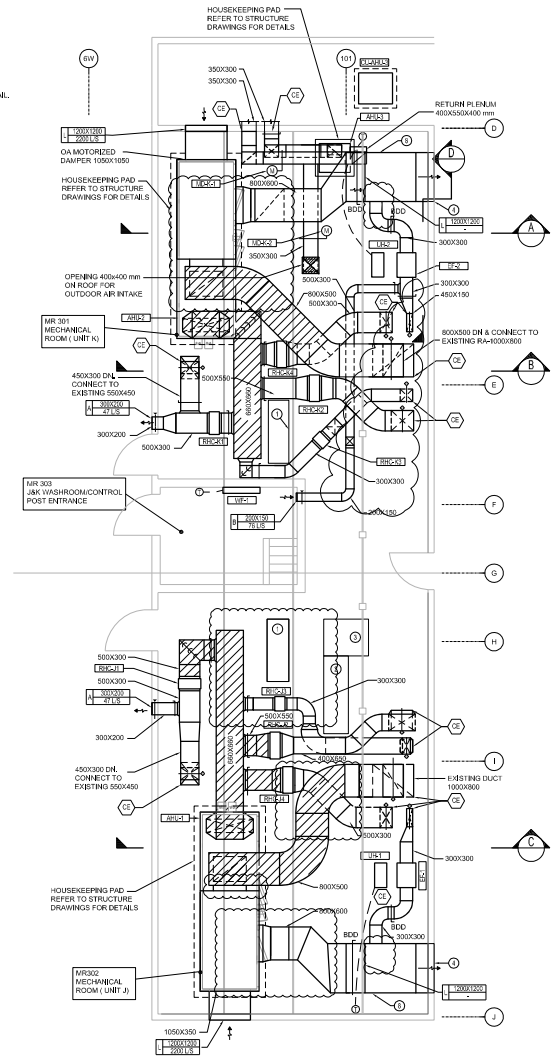

2 EQUIPMENT ROOM-HVAC SYSTEM (RENO)
SCALE: 1:50

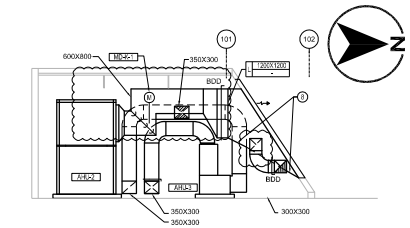

A SECTION
SCALE 1:50

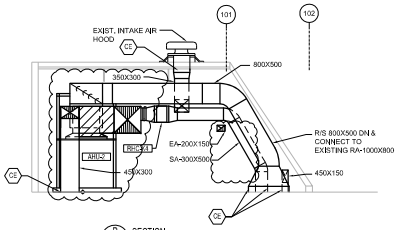

B SECTION
SCALE 1:50

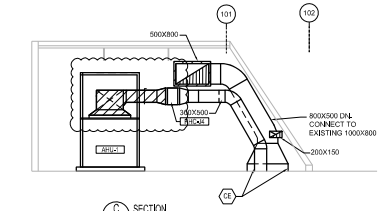

C SECTION
SCALE 1:50

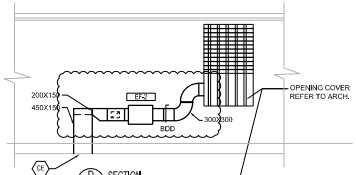

D SECTION
SCALE 1:50

GENERAL NOTES:

1- PROVIDE ACCESS DOOR IN NEW DUCTWORK FOR EXISTING FIRE DAMPERS.

2-THE PIPING ON THIS DRAWING ARE SHOWING THE GENERAL ROUTES AND CONNECTIONS. ALLOW FOR MODIFICATIONS IN RELATION TO THE DUCT WORK.

KEYNOTES:

1. EXISTING MCC PANEL (TO REMAIN).
2. EXISTING COMMUNICATION PANEL (TO REMAIN).
3. EXISTING UPS PANEL (TO REMAIN).
4. OPENING FOR EQUIPMENT REMOVAL. REFER TO ARCH. DRAWINGS FOR DETAILS.
5. SEE PLAN M4-02 FOR PIPING CONTINUATION. FOR VALVES ARRANGEMENT SEE DWG. M7-01.
6. CONNECT THE CONDENSATE LINE TO EXISTING DRAIN.
7. AVOID INSTALLING NEW WATER PIPING ABOVE EXISTING COMMUNICATION PANEL, UPS AND MCC.
8. COVER THE INTERIOR OF DUCT BY BITUMINOUS RUST RESISTANT PAINT. APPLY PER MANUFACTURER REQUIREMENTS.
9. REFRIGERANT PIPING CONNECT TO AC-J (ROOM #J220).
10. REFRIGERANT PIPING CONNECT TO AC-K1 & AC-K2 (ROOM # K220 & K221 RESPECTIVELY).

Public Works and Government Services Canada / Travaux publics et Services gouvernementaux Canada

REAL PROPERTY SERVICES
Pacific Region
SERVICES IMMOBILIERS
Région de Pacifique

CONSULTANTS:

PROJECT #15-05897-02

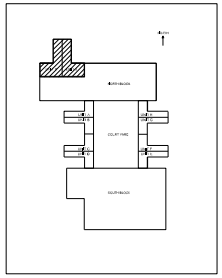

2	ISSUED FOR ADDENDUM - 01	2017.10.13
1	ISSUED FOR TENDER	2017.08.16
Revision/ Révision	Description/Description	Date/Date

Client/Client

CORRECTIONAL SERVICE OF CANADA

Project title/Titre du projet

AGASSIZ, BC
KENT MAXIMUM SECURITY INSTITUTION

MECHANICAL SYSTEM UPGRADE FOR CELL BLOCKS A through H and J & K

Consultant Signature Box Only

Designed by/Concept par: NKIFH

Drawn by/Dessiné par: MYIM.

PWGSC Project Manager/Gestionnaire de Projets TPSGC: MARVIN NG

Architectural Engineer, professional engineer, consultant/ Ingénieur architecte, ingénieur professionnel, consultant: PREETIPAL PAUL

Drawing title/Titre du dessin

LIVING UNITS J & K
MECHANICAL EQUIPMENT
ROOM (RENO)

Project No./No. du projet	Sheet/ Feuille	Revision No./ Le Révision No.
R.077723.001	M4-01	1

PWGSC – B1 – 100DX707

DMSXXXXXX

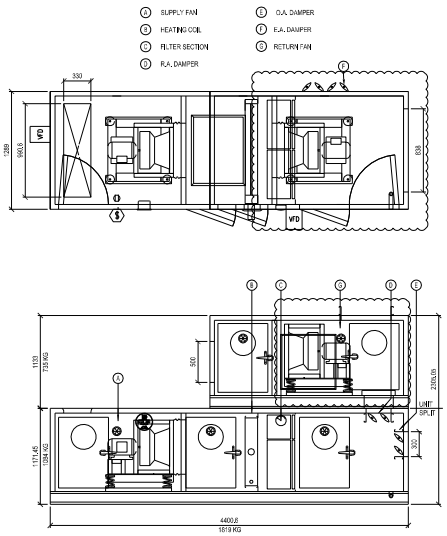

1 AIR HANDLING UNIT AHU-1 FOR LIVING UNIT J
NTS

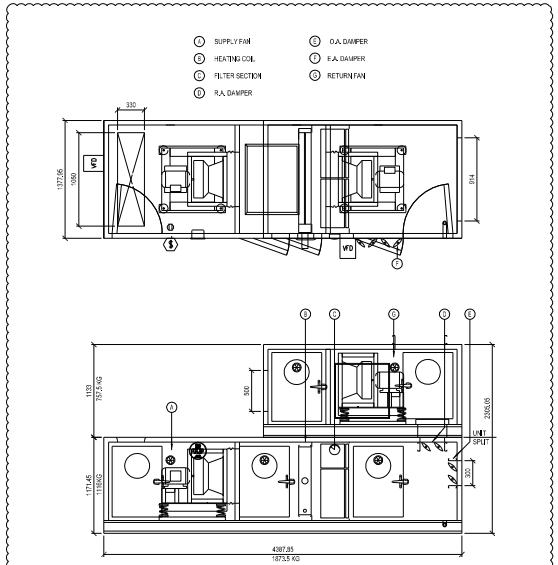

2 AIR HANDLING UNIT AHU-2 FOR LIVING UNIT K
NTS

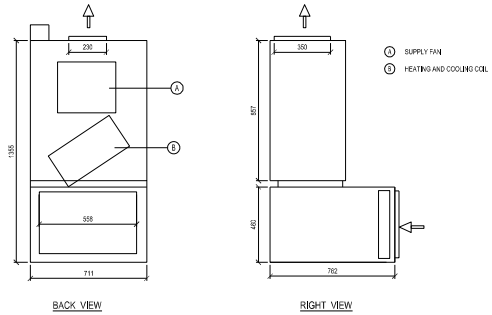

3 AIR HANDLING UNIT AHU-3 IN UNIT K EQUIPMENT ROOM
NTS

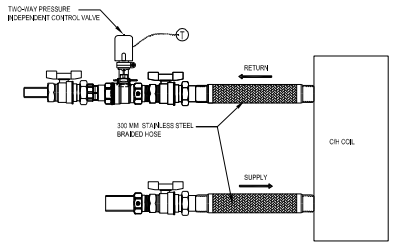

4 COIL CONNECTION KIT
NTS FOR CIH RAH

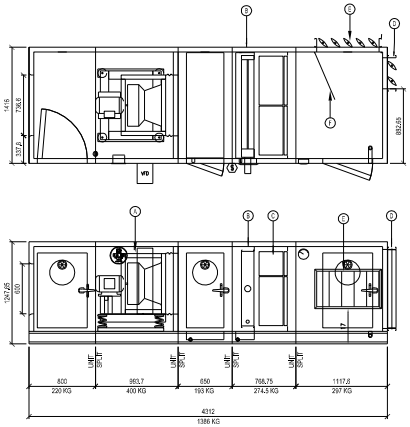

3 AIR HANDLING UNIT FOR LIVING UNIT A
NTS

A SUPPLY FAN
B HEATING COIL
C FILTER SECTION
D O.A. DAMPER
E R.A. DAMPER
F BAFFLE SHEET

AHU FOR UNIT A, C, E, G ARE SAME AS AHU-J,A-1. AHU FOR UNIT B, D, F, H ARE SIMILAR TO AHU-A,J-1 EXCEPT FOR ACCESS SIDE WHICH IS APPOSITE (MIRROR).

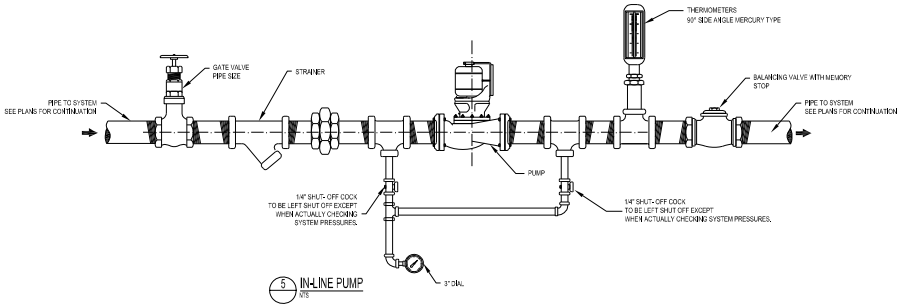

5 IN-LINE PUMP
NTS

Public Works and Government Services Canada / Travaux publics et Services gouvernementaux Canada

REAL PROPERTY SERVICES
Pacific Region
SERVICES IMMOBILIERS
Région de Pacifique

CONSULTANTS:

PROJECT #15-05897-02

Revision/ Revision	Description/Description	Date/Date
2	ISSUED FOR ADDENDUM - 01	2017.10.13
1	ISSUED FOR TENDER	2017.08.16

Client/Client

CORRECTIONAL SERVICE OF CANADA

Project title/Titre du projet

AGASSIZ, BC
KENT MAXIMUM SECURITY INSTITUTION

MECHANICAL SYSTEM UPGRADE FOR CELL BLOCKS A through H and J & K

Consultant Signature Box Only

Designed by/Concept par: NKIFH

Drawn by/Dessiné par: MYIM.

PWGSC Project Manager/Gestionnaire de Projets TPSGC: MARVIN NG

Architectural Engineer, professional in charge/Ingénieur architecte/Conseiller professionnel de service: PREETIPAL PAUL

Drawing title/Titre du dessin

MECHANICAL DETAILS
1 OF 2

Project No./No. du projet	Sheet/Feuille	Revision no./Révision no.
R.077723.001	M5-01 (25 OF 52)	1

PWGSC – 61 – 100DX707

DMSXXXXXX

AIR HANDLING UNIT

TAG NO.	QTY.	LOCATION	BASIS OF DESIGN	BASIS OF DESIGN	WEIGHT KG	SUPPLY AIR FAN In (CFM)	ESP (Pa)	TSP (Pa)	TYPE	MOTOR KW (HP)	MOTOR (BHP)	RETURN AIR FAN In (CFM)	ESP (Pa)	TSP (Pa)	TYPE	MOTOR KW (HP)	MOTOR (BHP)	HEATING COIL TOTAL KW (MBH)	FACE VEL. M/S (FPM)	APD WAL Pa (in.wg)	EJ.WB DB °C (°F)	LJ.WB DB °C (°F)	FLUID TYPE	EWT °C (°F)	LWT °C (°F)	FLOW l/s (GPM)	VPD kPa (FT.)	ROWS	FPI	CFM @ SEC	ELECTRICAL MAX. OA	VOLTAGE	MCA AMPS	MOP AMPS	ACCESSORIES
AHU-A/-1, AHU-C/-1 AHU-E-1, AHU-G-1	4	MECH ROOM - LIVING UNIT A, C, E, G	HAWKON		1500	2785 (5900)	350	756	VFD / PLENUM FAN	3.73 (5.0)	4.3	-	-	-	-	-	-	32.5 (110)	2.75 550	0.37 (0.15)	6 (42.8)	15.6 (60)	WATER	60°C (140°F)	48°C (120°F)	0.7 (11.1)	2.5 (7.65)	1	8	@ 900X1000 (35"X40")	50% S/A	575/3/60	-	-	1 TO 5
AHU-B/-1, AHU-D-1 AHU-F-/-, AHU-H-1	4	MECH ROOM - LIVING UNIT B, D, F, H	HAWKON		1500	2785 (5900)	350	756		3.73 (5.0)	4.3	-	-	-	-	-	-	32.5 (110)	2.75 550	0.37 (0.15)	6 (42.8)	15.6 (60)	WATER	60°C (140°F)	48°C (120°F)	0.7 (11.1)	2.5 (7.65)	1	8	@ 900X1000 (35"X40")	50% S/A	575/3/60	-	-	1 TO 5
AHU-I	1	MECH ROOM - LIVING UNIT J	HAWKON		1600	2005 (4500)	311	747		3.73 (5.0)	3.5	2000 (4250)	200	435	PF	2.24 (3.0)	2.2	14.2 (48.6)	2.5 500	0.37 (0.15)	10.0 (50.2)	15.6 (60)	WATER	60°C (140°F)	48°C (120°F)	0.28 (4.56)	3 (10)	1	6	@ 820X1000 (33"X44")	20% SUPPLY	575/3/60	-	-	1 TO 5
AHU-2	1	MECH ROOM - LIVING UNIT K	HAWKON		1600	2247 (4760)	311	747		3.73 (5.0)	3.5	2246 (4760)	200	435	PF	2.24 (3.0)	2.2	14.6 (49.9)	2.5 500	0.37 (0.15)	10.0 (50.2)	15.6 (60)	WATER	60°C (140°F)	48°C (120°F)	0.3 (4.9)	3.3 (11)	1	6	@ 820X1000 (33"X44")	20% SUPPLY	575/3/60	-	-	1 TO 5
AHU-3	1	MECH ROOM - LIVING UNIT K	TRANE, BLOWER COIL TYPE		150	378 (800)	80	273		0.25 (0.33)	0.3	-	-	-	-	-	-	9.96 (34)	2.5 500	0.37 (0.15)	10.0 (50.0)	31.6 (89.3)	WATER	60°C (140°F)	48°C (120°F)	0.17 (2.75)	1 (3)	1	6	@ 450X300 (20"X12")	20% SUPPLY	120/1/60	5.33	-	6

6, WITH DX COOLING COIL, R-410A FOR COOLING, CAPACITY = 2 TON

ACCESSORIES:
1. FAN INLET AND OUTLET SCREEN
2. HIGH EFFICIENCY MOTORS SUITABLE FOR USE WITH VFD
3. VSD FOR BOTH SUPPLY AND RETURN FAN
4. DISCONNECT SWITCHES
5. FILTER SECTION (1ST BANK AT 30%, 2ND BANK MERV 13)

TAG NO.	OPCV	SOUND POWER LEVELS (dB)								
		BAND	1	2	3	4	5	6	7	8
		FREQ	63	125	250	500	1000	2000	4000	8000
AHU-A/-1 TO AHU-C/-1	SA		83	82	69	84	81	78	72	64
	RA		76	76	87	80	73	72	68	61
	OA		76	77	88	81	74	73	69	62
AHU-1 & 2	SA		80	77	88	84	81	77	72	64
	RA		78	81	89	81	76	74	68	61
	EA		75	76	85	81	79	75	68	60
	OA		77	76	87	81	76	73	69	61

HOT WATER REHEAT COILS

EQUIPMENT	QTY	LOCATION	BASIS OF DESIGN		CAPACITY KW (MBH)	HOT WATER TEMP In	OUT	FLOW RATE l/s (GPM)	WPD kPa(FT)	AIR FLOW RATE l/s (CFM)	MAX. APD Pa (IN.WG.)	AIR TEMP (°C) In	OUT	MAX. NUMBER OF ROWS	NET FACE AREA mm x mm
LIVING UNIT A TO H															
RHC-A/-1 TO RHC-A/-1-1 (TYP. OF 8)	8	MECH ROOM - LIVING UNIT A (TO H)			12.95 (44.19)	60°C (140°F)	46°C (120°F)	0.22 (3.54)	15~50 (5~17)	548 (1160)	37 (0.15)	12.7 (55)	35.1 (95)	3	750X300
RHC-A/-2 TO RHC-A/-2 (TYP. OF 8)	8	MECH ROOM - LIVING UNIT A (TO H)			5.91 (19.83)	60°C (140°F)	46°C (120°F)	0.10 (1.60)	15~50 (5~17)	236 (500)	37 (0.15)	12.7 (55)	35.5 (96)	3	375X300
RHC-A/-3 TO RHC-A/-3 (TYP. OF 8)	8	MECH ROOM - LIVING UNIT A (TO H)			5.91 (19.83)	60°C (140°F)	46°C (120°F)	0.10 (1.60)	15~50 (5~17)	236 (500)	37 (0.15)	12.7 (55)	35.9 (96.2)	3	375X300
RHC-A/-4 TO RHC-A/-4 (TYP. OF 8)	8	MECH ROOM - LIVING UNIT A (TO H)			4.57 (15.93)	60°C (140°F)	46°C (120°F)	0.08 (1.20)	15~50 (5~17)	179 (380)	37 (0.15)	12.7 (55)	37 (98)	3	300X300
RHC-A/-5 TO RHC-A/-5 (TYP. OF 8)	8	MECH ROOM - LIVING UNIT A (TO H)			12.28 (41.25)	60°C (140°F)	46°C (120°F)	0.20 (3.20)	15~50 (5~17)	507 (1075)	37 (0.15)	12.7 (55)	35 (95)	2	450X450
RHC-A/-6 TO RHC-A/-6 (TYP. OF 8)	8	MECH ROOM - LIVING UNIT A (TO H)			12.32 (42.03)	60°C (140°F)	46°C (120°F)	0.23 (3.36)	15~50 (5~17)	552 (1170)	37 (0.15)	12.7 (55)	34 (94)	3	450X450
RHC-A/-7 TO RHC-A/-7 (TYP. OF 8)	8	MECH ROOM - LIVING UNIT A (TO H)			5.96 (20.35)	60°C (140°F)	46°C (120°F)	0.10 (1.60)	15~50 (5~17)	253 (530)	37 (0.15)	12.7 (55)	35 (95)	3	375X300
RHC-A/-8 TO RHC-A/-8 (TYP. OF 8)	8	MECH ROOM - LIVING UNIT A (TO H)			4.53 (15.46)	60°C (140°F)	46°C (120°F)	0.08 (1.20)	15~50 (5~17)	170 (360)	37 (0.15)	12.7 (55)	37.8 (99)	3	300X300
RHC-A/-9 TO RHC-A/-9 (TYP. OF 8)	8	MECH ROOM - LIVING UNIT A (TO H)			1.58 (5.38)	60°C (140°F)	46°C (120°F)	0.03 (0.43)	15~50 (5~17)	59 (125)	37 (0.15)	12.7 (55)	37.8 (99)	2	225X225
LIVING UNIT J & K															
RHC-J/1	1	MECH ROOM - LIVING UNIT J			13.53 (46.17)	60°C (140°F)	46°C (120°F)	0.23 (3.68)	15~50 (5~17)	512 (1085)	37 (0.15)	12.7 (55)	37.4 (98)	3	525X400
RHC-/2	1	MECH ROOM - LIVING UNIT J			16.27 (55.24)	60°C (140°F)	46°C (120°F)	0.28 (4.40)	15~50 (5~17)	614 (1300)	37 (0.15)	12.7 (55)	37.8 (99)	3	600X450
RHC-/3	1	MECH ROOM - LIVING UNIT J			2.86 (9.84)	60°C (140°F)	46°C (120°F)	0.05 (0.80)	15~50 (5~17)	109 (230)	37 (0.15)	12.7 (55)	37.8 (99)	3	300X300
RHC-/4	1	MECH ROOM - LIVING UNIT J			17.89 (61.03)	60°C (140°F)	46°C (120°F)	0.31 (4.88)	15~50 (5~17)	684 (1450)	37 (0.15)	12.7 (55)	37.8 (99)	3	600X450
RHC-K1	1	MECH ROOM - LIVING UNIT K			13.53 (46.17)	60°C (140°F)	46°C (120°F)	0.23 (3.68)	15~50 (5~17)	512 (1085)	37 (0.15)	12.7 (55)	37.4 (98)	3	525X450
RHC-K2	1	MECH ROOM - LIVING UNIT K			17.89 (61.03)	60°C (140°F)	46°C (120°F)	0.31 (4.88)	15~50 (5~17)	684 (1450)	37 (0.15)	12.7 (55)	37.8 (99)	3	600X450
RHC-K3	1	MECH ROOM - LIVING UNIT K			6.11 (20.84)	60°C (140°F)	46°C (120°F)	0.10 (1.52)	15~50 (5~17)	212 (450)	37 (0.15)	12.7 (55)	37.8 (99)	3	300X300
RHC-K4	1	MECH ROOM - LIVING UNIT K			17.89 (61.03)	60°C (140°F)	46°C (120°F)	0.31 (4.88)	15~50 (5~17)	684 (1450)	37 (0.15)	12.7 (55)	38.9 (102)	3	600X450

NOTE:
1- COIL FACE VELOCITY IS 2.5 M/S (500FPM).

SPLIT AIR CONDITIONING - INDOOR AND OUTDOOR UNITS

EQUIPMENT	QTY	LOCATION	BASIS OF DESIGN	ACCEPTABLE MATERIALS	MODEL TYPE	COOLING KW(BTU/H)	SEER	ELECTRICAL	MCA (A)	SOUND PRESSURE LEVEL (dBA) (H / L)	ACCESSORIES
AC-A/-1 TO AC-J/-1 (TYP. OF 8)	8	INDOOR UNIT /OFFICE			WALL MOUNTED	3.52 (12000)	18	208/1/60	14.5	49/38	1 TO 6
CU-A/-1 TO CU-J/-1 (TYP. OF 8)	8	OUTDOOR UNIT / ROOF									
AC-A/-2 TO AC-H-2 (TYP. OF 8)	8	INDOOR UNIT / CLASSIFIC. OFFICE			WALL MOUNTED	3.52 (12000)	18	208/1/60	14.5	49/38	1 TO 6
CU-A/-2 TO CU-J-2 (TYP. OF 8)	8	OUTDOOR UNIT / ROOF									
AC-A/B-1, AC-C/D-1, AC-E/F-1, AC-G/H-1	4	INDOOR UNIT / TUNNEL			SLIM DUCTED CEILING UNIT	5.28 (18000)	18	208/1/60	16.5	37/33	1 TO 6
CU-A/B-1, CU-C/D-1, CU-E/F-1, CU-G/H-1	4	OUT DOOR UNIT / ROOF									
AC-K1 & AC-K2	2	INDOOR: RM # K20 & K21			WALL MOUNTED	2x3.52 (2X12000)	18	208/1/60	19.5	52/39	1 TO 7
CU-K	1	OUTDOOR			ROOF MOUNTED						
AC-J	1	INDOOR RM #J220			WALL MOUNTED	4.25 (15000)	18	208/1/60	16	52/39	1 TO 7
CU-J	1	OUT DOOR			ROOF MOUNTED						

ACCESSORIES:
1. CONDENSATE PUMP.
2. SINGLE-POINT POWER CONNECTION TO OUTDOOR UNIT; POWER TO INDOOR FROM OUTDOOR UNIT.
3. WINDSCREENS AND ULTRA-LOW AMBIENT KIT, COOLING OPERATING RANGE TO -40°C.
4. DDC INTERFACE CARD FOR DDC CONNECTION.
5. WIRED CONTROLLER (T-STAT)
6. FAILURE SIGNAL TO DDC
7. HEAT PUMP UNIT

WALL FIN HEATER

EQUIPMENT	QTY	LOCATION	BASIS OF DESIGN	ACCEPTABLE MATERIALS	CAPACITY KW (MBH)	HOT WATER TEMP In (°C/°F)	OUT (°C/°F)	FLOW RATE l/s (GPM)	ROW	ENCLOSURE HEIGHT (mm)	ENCLOSURE LENGTH (mm)	ELEMENT LENGTH (mm)	CORRECTION FACTOR	ACCESSORIES
WF-1	1	J & K CORRIDOR			0.4 (1.4)	60°C (140°F)	42°C (120°F)	0.01 (0.1)	1	305	900	600	note-1	-
WF-2	8	MECH ROOM - LIVING UNIT A (TO H)			1.8 (6.2)	60°C (140°F)	42°C (120°F)	0.03 (0.6)	1	305	3000	2700	note-1	-

NOTE:
1- CORRECTION FACTOR IS CONSIDERED IN UNIT SELECTION.

CONDENSING UNITS

EQUIPMENT	QTY	LOCATION	BASIS OF DESIGN	ACCEPTABLE MATERIALS	COOLING (TOR)	MCA (AMPS)	ELECTRICAL	ACCESSORIES
CU-AHU-3	1	ROOF			2	12.0	208/1/60	INTERLOCK WITH AHU-3 IN LIVING UNIT K, R-410A REFRIGERANT, LOW AMBIENT KIT
CU-FC-1	1	ROOF			2	16.5	208/1/60	INTERLOCK WITH FC-1 IN CONTROL POST AT EQUIPMENT ROOM LEVEL, LOW AMBIENT KIT

ACCESSORIES:
1- DDC INTERFACE.
2- FAILURE SIGNAL.

EXHAUST FANS

EQUIPMENT	QTY	LOCATION	BASIS OF DESIGN	ACCEPTABLE MATERIALS	TYPE	FLOW l/s (CFM)	E.S.P. (Pa)	HP	ELECT	SOUND LEVEL (dBA)	ACCESSORIES
EF-A/-A-1 TO EF-A/-H-1 (TYP. OF 8)	8	MECH ROOM - LIVING UNIT A (TO H)			CENTRIFUGAL INLINE	59 (125)	50	1/4	120/1/60	47	1 TO 5
EF-A/-A-2 TO EF-A/-H-2 (TYP. OF 8)	8	MECH ROOM - LIVING UNIT A (TO H)			CENTRIFUGAL INLINE	59 (125)	50	1/4	120/1/60	47	1 TO 5
EF-A/-A-3 TO EF-A/-H-3 (TYP. OF 8)	8	ROOF			CENTRIFUGAL DOWNBLAST	94.4 (200)	62.2	1/4	120/1/60	39	1 TO 5, 7
EF-A/-A-4 TO EF-A/-H-4 (TYP. OF 8)	8	MECH ROOM - LIVING UNIT A (TO H)			CENTRIFUGAL INLINE	890 (1800)	125	3/4	120/1/60	63	1 TO 5, 8
EF-/-1	1	MECH ROOM - LIVING UNIT J			CENTRIFUGAL INLINE	152 (322)	124	1/4	120/1/60	54	1 TO 6
EF-/-2	1	MECH ROOM - LIVING UNIT K			CENTRIFUGAL INLINE	227 (480)	124	1/4	120/1/60	49	1 TO 6

ACCESSORIES:
1- EC MOTOR W/ MOTOR MOUNTED SPEED CONTROL
2-DISCONNECT SWITCH
3- W/ BACK DRAFT DAMPER
4- W/ FLEXIBLE DUCT CONNECTORS
5- INLINE DISCHARGE
6- ISOLATORS (4 SET)
7- FAN BASE TO BE CUSTOM-MADE TO FIT THE EXISTING CURB OUTSIDE DIMENSION OF 5100X10 mm.
8- SINGLE SIDE DISCHARGE, ACCESS BELOW.

RETURN FANS

EQUIPMENT	QTY	LOCATION	BASIS OF DESIGN	ACCEPTABLE MATERIALS	TYPE	FLOW l/s (CFM)	E.S.P. (Pa)	DRIVE TYPE	HP	BHP	ELECT	SOUND LEVEL (dBA)	ACCESSORIES
RF-A/-H-1 TO RF-A/-H-1 (TYP. OF 8)	8	MECH ROOM - LIVING UNIT A TO H			MIXED FLOW-INLINE	1652 (3500)	174	DIRECT DRIVE	2	1.6	575/3/60	55	1 TO 4

1- CAN VFD
2-DISCONNECT SWITCH
3- CAN VIBRATION ISOLATOR
4- W/ FLEXIBLE DUCT CONNECTORS
5- INSULATED HOUSING

PUMPS

TAG NO.	QTY	SERVICE	BASIS OF DESIGN	ACCEPTABLE MATERIALS	FLOW l/s (GPM)	HEAD M (FT.)	TYPE	ELECTRICAL	MAX. POWER INPUT (W)	ACCESSORIES
P-A/-1 TO P-J/-1 (TYP. OF 8)	8	MECH ROOM - LIVING UNIT A TO H	GRUNDFOS UPS 32-160 F	ARMSTRONG, B&G	2.1 (33.3)	8.5 (28)	WET ROTOR	120/1/60	625	1
P-J/	1	LIVING UNIT J & K (IN NORTH MECH ROOM)	GRUNDFOS UPS 50-160 F		3.1 (50)	14 (45)	WET ROTOR	208/3/60	1300	1

5- DISCONNECT SWITCH

CABINET UNIT HEATERS

TAG No.	QTY.	LOCATION	BASIS OF DESIGN	ACCEPTABLE MATERIALS	NOMINAL AIR FLOW L/S (CFM)	WATER FLOW L/S (GPM)	HEATING CAPACITY KW (MBH)	HOT WATER TEMP. In °C(°F)	OUT °C(°F)	FAN MOTOR (HP)	ELECTRICAL	ACCESSORIES
CUH-/-H1 TO CUH-/-H1	8	IN RM EVERSING VESTIBULE - LIVING UNIT			250(530)	0.25 (4.0)	12.8 (43.6)	82 (140)	49 (120)	1/4	120/1/60	-

NOTE:
1- CORRECTION FACTOR IS CONSIDERED IN UNIT SELECTION.

GENERAL NOTES:

1. REFER TO GENERAL INSTRUCTION TO BIDDERS FOR APPROVAL OF ALTERNATIVE MATERIALS.

Public Works and Government Services Canada / Travaux publics et Services gouvernementaux Canada

REAL PROPERTY SERVICES
Pacific Region
SERVICES IMMOBILIERS
Région de Pacifique

CONSULTANTS:

wsp

PROJECT #15-05897-02

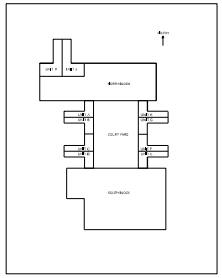

2	ISSUED FOR ADDENDUM - 01	2017.10.13
1	ISSUED FOR TENDER	2017.08.16
Revision/ Révision	Description/Description	Date/Date

Client/Client

CORRECTIONAL SERVICE OF CANADA

Project title/Titre du projet

AGASSIZ, BC
KENT MAXIMUM SECURITY INSTITUTION

MECHANICAL SYSTEM UPGRADE FOR CELL BLOCKS A through H and J & K

Consultant Signature Box Only

Designed by/Conceptl par
NKIFH

Drawn by/Dessiné par
MYMN.

PWGSC Project Manager/Gestionnaire de Projets TPSGC
MARVIN NG

Approved by/Approuvé par
PREETPAL PAUL

Drawing title/Titre du dessin

MECHANICAL SCHEDULES
1 OF 2

Project No./No. du projet	Sheet/Feuille	Revision No./ Révision no.
R.077723.001	M6-01 27 OF 52	1

PWGSC – 61 – 100DX707

0 10 20 30 40 50 60 70 80 90 100mm

DMSXXXXXX

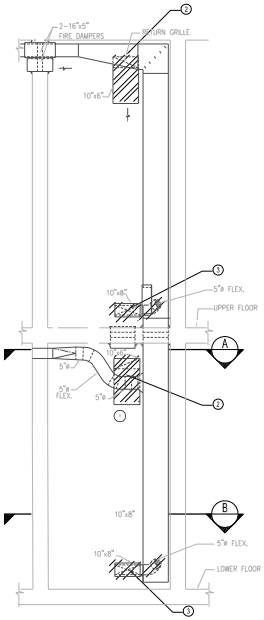

1 M9-01 SECTION THROUGH SERVICE CHASE (DEMO)
1:20

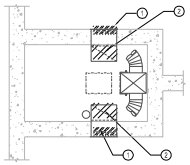

A DEMO PLAN - RETURN
1:20

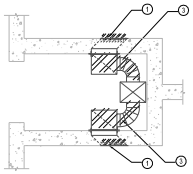

B DEMO PLAN - SUPPLY
1:20

PHOTO-1 SHOWING RETURN GRILLE DEMO

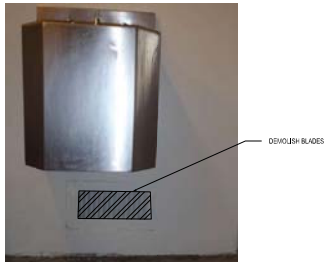

PHOTO-2 SHOWING SUPPLY GRILLE DEMO

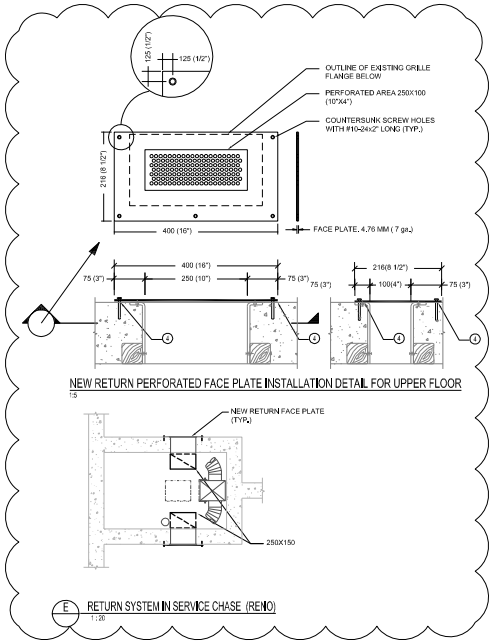

NEW RETURN PERFORATED FACE PLATE INSTALLATION DETAIL FOR UPPER FLOOR
1:5

E RETURN SYSTEM IN SERVICE CHASE (RENO)
1:20

GENERAL NOTES

1.-BEFORE ORDERING THE GRILLES, MAKE A PROTOTYPE WITH PANEL BOARD FOR APPLICABLE SIZE OF GRILLES AND APPROVAL.

KEY NOTES

1. DEMOLISH THE BLADES FROM EXISTING RETURN AND SUPPLY GRILLE, SEE PHOTO-1&2.
2. DEMOLISH RETURN DUCT.
3. DEMOLISH SUPPLY DUCT.
4. APPLY PICK-PROOF AND TAMPER-PROOF SECURITY SEALANT WITH SHORE HARDNESS OF NOT LESS THAN 70 ALL AROUND AND BELOW THE GRILLES FLANGE IN CONTACT WITH CONCRETE.

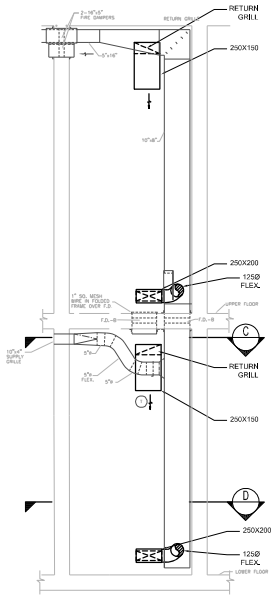

2 M9-02 SECTION THROUGH SERVICE CHASE (RENO)
1:20

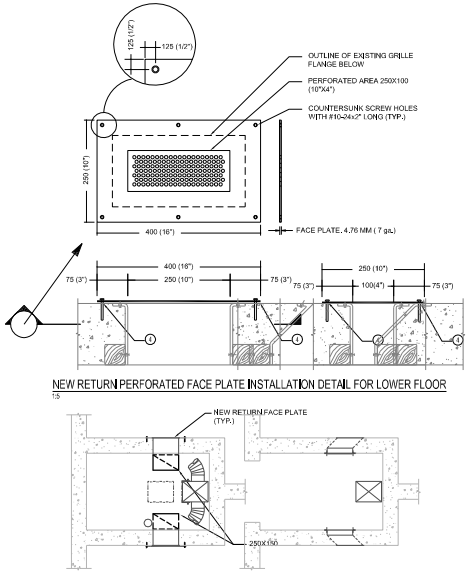

NEW RETURN PERFORATED FACE PLATE INSTALLATION DETAIL FOR LOWER FLOOR
1:5

C RETURN SYSTEM IN SERVICE CHASE (RENO)
1:20

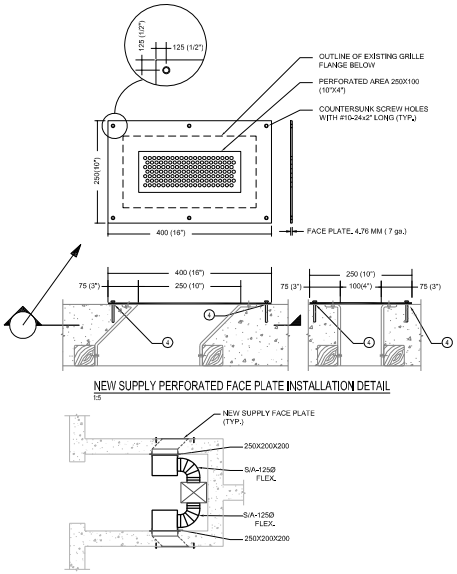

NEW SUPPLY PERFORATED FACE PLATE INSTALLATION DETAIL
1:5

D SUPPLY SYSTEM IN SERVICE CHASE (RENO)
1:20

Public Works and Government Services Canada / Travaux publics et Services gouvernementaux Canada

REAL PROPERTY SERVICES
Pacific Region
SERVICES IMMOBILIERS
Région de Pacifique

CONSULTANTS:

wsp

PROJECT #15-105897-02

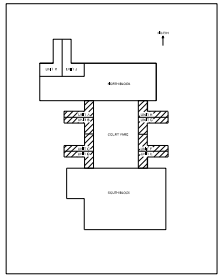

1	ISSUED FOR ADDENDUM 01	2017.10.13
1	ISSUED FOR TENDER	2017.08.16
Revision/ Révision	Description/Description	Date/Date

Client/Client

CORRECTIONAL SERVICE OF CANADA

Project title/Titre du projet

AGASSIZ, BC
KENT MAXIMUM SECURITY INSTITUTION

MECHANICAL SYSTEM UPGRADE FOR CELL BLOCKS A through H and J & K

Consultant Signature Box Only

Designed by/Concept par
NKIFH

Drawn by/Dessiné par
MYIML

PWGSC Project Manager/Administrateur de Projets TPSGC
MARVIN NG

Approved by/Approuvé par
PREETIPAL PAUL

Drawing title/Titre du dessin

SECURITY GRILLES REPLACEMENT FOR LIVING UNITS A TO H SECTIONS (DEMO & RENO)

Project No./No. du projet	Sheet/ Feuille	Revision No./ Révision No.
R.077723.001	M9-03	1

32 OF 52

PWGSC – 01 – 100DX707

DM5XXXXXX

PICTURE NO. 1 - EXISTING INDOOR AC UNIT IN ROOM 220K

PICTURE NO. 2 - EXISTING INDOOR AC UNIT IN ROOM 221K

PICTURE NO. 3 - EXISTING INDOOR AC UNIT IN ROOM 220J

PICTURE NO. 4 - EXISTING CABINET UNIT HEATER IN ROOM 100 IN EACH LIVING UNIT A TO H