METRIC 485-5393

CATERPILLAR Marine Diesel Engine Model C4.4DIT Radiator MCS for genset applications

C4.4 Turbocharged Engine
Total wet weight = TBA kg

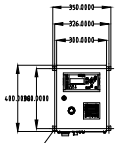

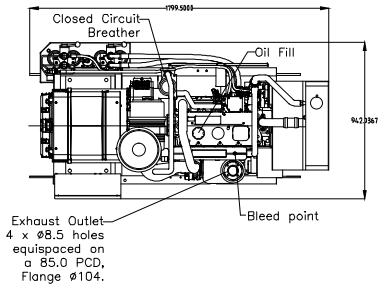

TOP VIEW

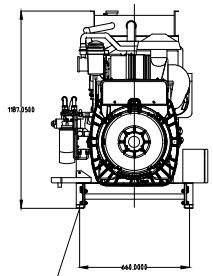

REAR VIEW

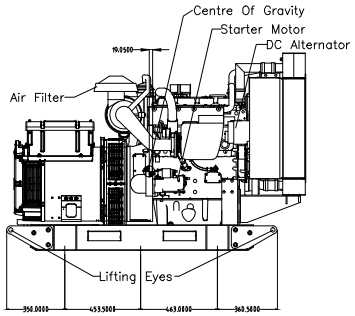

LEFT SIDE VIEW

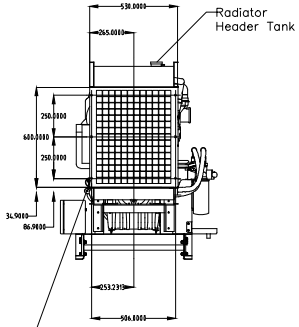

FRONT VIEW

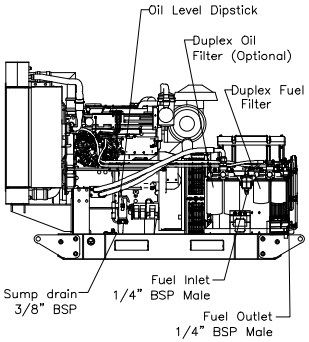

(Optional 1.75m long flexible hoses available with 1/4" NPT Female or 1/4" BSP Male connections)

RIGHT SIDE VIEW

MODEL	TYPE	PRICING AR	BASE AND ENCL
C4.4	G	GS-0888 CHG 00	GS-0752 CHG 00
		GS-0890 CHG 00	

DRG	1E2733	DRAWING-AUTOCAD
SPC	1E0011	INTPR & TOL
DRN	J.M.WILLIAMS	
CHK	J.M.WILLIAMS	
APPD	N.P. MOUNTJOY	
PROD	X	

UNLESS OTHERWISE SPECIFIED
DIMENSIONS ARE IN MM [INCH]
DIMENSIONS W/O TOL ARE BASIC

SCALE 1 = 10
SHEET 1 OF 1
THIRD ANGLE PROJECTION
00 08MAY15
CHG DATE

CATERPILLAR INC.

THE INFORMATION HEREON IS THE PROPERTY OF CATERPILLAR INC. AND/OR ITS SUBSIDIARIES AND MAY BE PROTECTED BY COPYRIGHT, TRADEMARK OR PATENT LAW. REPRODUCTION OR USE FOR ANY PURPOSE OTHER THAN THAT AUTHORIZED BY CATERPILLAR IS PROHIBITED.

INSTALLATION-ENGINE
C4.4 DIT MCS RAD

485-5393 - DES 24 SUB W515 E