Public Works and Government Services Canada | Travaux publics et Services gouvernementaux Canada

RETURN BIDS TO:
RETOURNER LES SOUMISSIONS À:

Bid Receiving - PWGSC / Réception des soumissions – TPSGC
11 Laurier St. / 11, rue Laurier
Place du Portage, Phase III
Core 0B2 / Noyau 0B2
Gatineau
Quebec
K1A0S5
Bid Fax: (819) 997-9776

REQUEST FOR PROPOSAL
DEMANDE DE PROPOSITION

Proposal To: Public Works and Government Services Canada

We hereby offer to sell to Her Majesty the Queen in right of Canada, in accordance with the terms and conditions set out herein, referred to herein or attached hereto, the goods, services, and construction listed herein and on any attached sheets at the price(s) set out therefor.

Proposition aux: Travaux Publics et Services Gouvernementaux Canada

Nous offrons par la présente de vendre à Sa Majesté la Reine du chef du Canada, aux conditions énoncées ou incluses par référence dans la présente et aux annexes ci-jointes, les biens, services et construction énumérés ici sur toute feuille ci-annexée, au(x) prix indiqué(s).

Comments - Commentaires

Title - Sujet
EREP: Curtain Boom

Solicitation No. - N° de l'invitation	**Date**
F7047-160033/A	2017-12-04

Client Reference No. - N° de référence du client
F7047-160033

GETS Reference No. - N° de référence de SEAG
PW-$ERD-002-26562

File No. - N° de dossier	**CCC No./N° CCC - FMS No./N° VME**
002erd.F7047-160033	

Solicitation Closes - L'invitation prend fin
at - à 02:00 PM
on - le 2018-01-15

Time Zone
Fuseau horaire
Eastern Standard Time
EST

F.O.B. - F.A.B. Specified Herein - Précisé dans les présentes
Plant-Usine: ☐ **Destination:** ☐ **Other-Autre:** ☑

Address Enquiries to: - Adresser toutes questions à:	**Buyer Id - Id de l'acheteur**
Szczesniak, Michal	002erd

Telephone No. - N° de téléphone	**FAX No. - N° de FAX**
(250) 507-0647 ( )	( ) -

Destination - of Goods, Services, and Construction:
Destination - des biens, services et construction:
DEPARTMENT OF FISHERIES AND OCEANS
INTEGRATED TECHNICAL SERVICES
200 KENT ST - STN 7S036
See Herein
OTTAWA
Ontario
K1A0E6
Canada

Instructions: See Herein

Instructions: Voir aux présentes

Vendor/Firm Name and Address
Raison sociale et adresse du fournisseur/de l'entrepreneur

Delivery Required - Livraison exigée	**Delivery Offered - Livraison proposée**
See Herein	

Vendor/Firm Name and Address
Raison sociale et adresse du fournisseur/de l'entrepreneur

Telephone No. - N° de téléphone
Facsimile No. - N° de télécopieur

Name and title of person authorized to sign on behalf of Vendor/Firm (type or print)
Nom et titre de la personne autorisée à signer au nom du fournisseur/ de l'entrepreneur (taper ou écrire en caractères d'imprimerie)

Signature **Date**

Issuing Office - Bureau de distribution
Marine Emergency Response Division/Division des Interventions en cas d'urgence maritime
Centennial Towers 7th Floor - 7W11
200 Kent Street
Ottawa
Ontario
K1A0S5

Canada

TABLE OF CONTENTS

PART 1 - GENERAL INFORMATION

1.1 Introduction

The bid solicitation is divided into seven parts plus attachments and annexes, as follows:

Part 1 General Information: provides a general description of the requirement;

Part 2 Bidder Instructions: provides the instructions, clauses and conditions applicable to the bid solicitation;

Part 3 Bid Preparation Instructions: provides Bidders with instructions on how to prepare their bid;

Part 4 Evaluation Procedures and Basis of Selection: indicates how the evaluation will be conducted, the evaluation criteria that must be addressed in the bid, and the basis of selection;

Part 5 Certifications and Additional Information: includes the certifications and additional information to be provided;

Part 6 Security, Financial and Other Requirements: includes specific requirements that must be addressed by Bidders; and

Part 7 Resulting Contract Clauses: includes the clauses and conditions that will apply to any resulting contract.

The Schedules include the Basis of Payment, Deliveries, and Milestone Payments.

The Annexes include the Statement of Work, Technical Statement of Requirements, Technical Bid Evaluation Plan, and various forms.

1.2 Summary

The Canadian Coast Guard (CCG) has a requirement for curtain boom and associated products and services. A curtain boom is a temporary floating barrier to contain a pollution spill. The CCG regularly uses curtain booms to reduce the possibility of polluting shorelines and other resources, in addition to facilitating recovery efforts.

The period of the resulting contract will be from date of contract to November 30, 2018 (inclusive) with Canada having irrevocable options to extend the term of the contract by up to two additional periods as specified in the resulting contract clauses under the same conditions. Delivery destinations are identified in Schedule B. The resulting contract may also be utilized for deliveries to other federal, provincial, territorial, and municipal government organizations and Crown corporations

This procurement is part of the Environmental Response Equipment (ERE) Program for the CCG, and forms part of the Oceans Protection Plan announced in November 2016. Under the ERE Program, CCG is renewing its suite of environmental response (ER) equipment, ensuring a robust and strategic national response capability. The ERE Program will replace aging ER equipment and introduce some new technologies to over 80 locations across the country through approximately 50-100 unique procurements for different types of equipment.

The requirement is subject to the provisions of the World Trade Organization Agreement on Government Procurement (WTO-AGP), the North American Free Trade Agreement (NAFTA), the Canada-European Union Comprehensive Economic and Trade Agreement (CETA), and the Canadian Free Trade Agreement (CFTA).

This procurement is subject to the Nunavut Agreement (also referred to as Nunavut Land Claims Agreement), Inuvialuit Final Agreement, and Gwich'in Comprehensive Land Claim Agreement.
Bidders should consult the following business directories for assistance in the delivery of the goods and services to the final destinations in the Comprehensive Land Claims Agreement (CLCA) areas:

a. the Inuit for the Nunavut Land Claims Agreement:
http://inuitfirm.tunngavik.com
b. the Inuvialuit for the Inuvialuit Final Agreement:
http://www.irc.inuvialuit.com/business/inuvialuit-business-list-ibl
c. the Gwich'in Business directory for the Gwich'in Land Claim Agreement:
http://gwichin.biz/index.php/registered-business.

This bid solicitation is to establish a contract with task authorizations (TA) for the delivery of the requirement detailed in the bid solicitation, to the Identified Users across Canada, including areas subject to Comprehensive Land Claims Agreements.

The Federal Contractors Program (FCP) for employment equity applies to this procurement; see Part 5 – Certifications and Additional Information, Part 7 - Resulting Contract Clauses and the annex titled *Federal Contractors Program for Employment Equity - Certification.*

Bidders intending to submit bids should obtain solicitation documents from the Government Electronic Tendering System (GETS) at http://BuyAndSell.gc.ca. Solicitation amendments, if and when issued, will be available on GETS. It is the responsibility of the Bidder to ensure that all amendments issued during the solicitation period have been obtained and addressed in the submitted bid. Bidders basing their submissions on solicitation documents obtained from other sources do so at their own risk.

Businesses interested in learning more about selling to the Government of Canada are encouraged to review https://BuyAndSell.gc.ca/for-businesses/selling-to-the-government-of-canada.
The Office of Small and Medium Enterprises (OSME) offers free seminars to businesses interested in learning about the general procurement process and how to sell goods and services to the government. Refer to http://www.tpsgc-pwgsc.gc.ca/app-acq/pme-sme/index-eng.html for more information about OSME's seminars and other services.
Enquiries regarding this bid solicitation must be directed only to the Contracting Authority identified in the bid solicitation.

1.3 Debriefings

Bidders may request a debriefing on the results of the bid solicitation process. Bidders should make the request to the Contracting Authority within 15 working days from receipt of the results of the bid solicitation process. The debriefing may be in writing, by telephone or in person.

PART 2 - BIDDER INSTRUCTIONS

2.1 Standard Instructions, Clauses and Conditions

All instructions, clauses and conditions identified in the bid solicitation by number, date and title are set out in the *Standard Acquisition Clauses and Conditions Manual* (https://buyandsell.gc.ca/policy-and-guidelines/standard-acquisition-clauses-and-conditions-manual) issued by Public Works and Government Services Canada.

Bidders who submit a bid agree to be bound by the instructions, clauses and conditions of the bid solicitation and accept the clauses and conditions of the resulting contract.

The 2003 (2017-04-27) Standard Instructions - Goods or Services - Competitive Requirements, are incorporated by reference into and form part of the bid solicitation.

Subsection 5.4 of 2003, Standard Instructions - Goods or Services - Competitive Requirements, is amended as follows:
Delete: 60 days
Insert: 180 days.

2.1.1 *SACC* Manual Clauses

2.1.1.1 Equivalent Products

1. Products that are equivalent in form, fit, function and quality to the item(s) specified in the bid solicitation will be considered where the Bidder:
   a. designates the brand name, model and/or part number of the substitute product;
   b. states that the substitute product is fully interchangeable with the item specified;
   c. provides complete specifications and descriptive literature for each substitute product;
   d. provides compliance statements that include technical specifics showing the substitute product meets all mandatory performance criteria that are specified in the bid solicitation; and
   e. clearly identifies those areas in the specifications and descriptive literature that support the substitute product's compliance with any mandatory performance criteria.

2. Products offered as equivalent in form, fit, function and quality will not be considered if:
   a. the bid fails to provide all the information requested to allow the Contracting Authority to fully evaluate the equivalency of each substitute product; or
   b. the substitute product fails to meet or exceed the mandatory performance criteria specified in the bid solicitation for that item.

3. In conducting its evaluation of the bids, Canada may, but will have no obligation to, request bidders offering a substitute product to demonstrate, at the sole cost of bidders, that the substitute product is equivalent to the item specified in the bid solicitation.

2.1.1.2 List of Proposed Subcontractors

If the bid includes the use of subcontractors, the Bidder agrees, upon request from the Contracting Authority, to provide a list of all subcontractors including a description of the things to be purchased, a description of the work to be performed and the location of the performance of that work. The list should not include the purchase of off-the-shelf items, software and such standard articles and materials as are ordinarily produced by manufacturers in the normal course of business, or the provision of such incidental services as might ordinarily be subcontracted in performing the Work.

2.2 Submission of Bids

Bids must be submitted only to **Public Works and Government Services Canada (PWGSC) Bid Receiving Unit** by the date, time and place indicated on page 1 of the bid solicitation.

Due to the nature of the bid solicitation, bids transmitted by facsimile or e-mail to PWGSC will not be accepted.

2.3 Former Public Servant

Contracts awarded to former public servants (FPS) in receipt of a pension or of a lump sum payment must bear the closest public scrutiny, and reflect fairness in the spending of public funds. In order to comply with Treasury Board policies and directives on contracts awarded to FPSs, bidders must provide the information required below before contract award. If the answer to the questions and, as applicable the information required have not been received by the time the evaluation of bids is completed, Canada will inform the Bidder of a time frame within which to provide the information. Failure to comply with Canada's request and meet the requirement within the prescribed time frame will render the bid non-responsive.

Definitions

For the purposes of this clause,

"former public servant" is any former member of a department as defined in the *Financial Administration Act*, R.S., 1985, c. F-11, a former member of the Canadian Armed Forces or a former member of the Royal Canadian Mounted Police. A former public servant may be:

a. an individual;
b. an individual who has incorporated;
c. a partnership made of former public servants; or
d. a sole proprietorship or entity where the affected individual has a controlling or major interest in the entity.

"lump sum payment period" means the period measured in weeks of salary, for which payment has been made to facilitate the transition to retirement or to other employment as a result of the implementation of various programs to reduce the size of the Public Service. The lump sum payment period does not include the period of severance pay, which is measured in a like manner.

"pension" means a pension or annual allowance paid under the *Public Service Superannuation Act* (PSSA), R.S., 1985, c. P-36, and any increases paid pursuant to the *Supplementary Retirement Benefits Act*, R.S., 1985, c. S-24 as it affects the PSSA. It does not include pensions payable pursuant to the *Canadian Forces Superannuation Act*, R.S., 1985, c. C-17, the *Defence Services Pension Continuation Act*, 1970, c. D-3, the *Royal Canadian Mounted Police Pension Continuation Act* , 1970, c. R-10, and the *Royal Canadian Mounted Police Superannuation Act*, R.S., 1985,

c. R-11, the *Members of Parliament Retiring Allowances Act*, R.S. 1985, c. M-5, and that portion of pension payable to the *Canada Pension Plan Act*, R.S., 1985, c. C-8.

Former Public Servant in Receipt of a Pension

As per the above definitions, is the Bidder a FPS in receipt of a pension?
Yes ( ) **No** ( )

If so, the Bidder must provide the following information, for all FPSs in receipt of a pension, as applicable:
a. name of former public servant;
b. date of termination of employment or retirement from the Public Service.

By providing this information, Bidders agree that the successful Bidder's status, with respect to being a former public servant in receipt of a pension, will be reported on departmental websites as part of the published proactive disclosure reports in accordance with Contracting Policy Notice: 2012-2 and the Guidelines on the Proactive Disclosure of Contracts.

Work Force Adjustment Directive

Is the Bidder a FPS who received a lump sum payment pursuant to the terms of the Work Force Adjustment Directive?
Yes ( ) **No** ( )

If so, the Bidder must provide the following information:
a. name of former public servant;
b. conditions of the lump sum payment incentive;
c. date of termination of employment;
d. amount of lump sum payment;
e. rate of pay on which lump sum payment is based;
f. period of lump sum payment including start date, end date and number of weeks;
g. number and amount (professional fees) of other contracts subject to the restrictions of a work force adjustment program.

For all contracts awarded during the lump sum payment period, the total amount of fees that may be paid to a FPS who received a lump sum payment is $5,000, including Applicable Taxes.

2.4 Enquiries - Bid Solicitation

All enquiries must be submitted in writing to the Contracting Authority no later than 14 calendar days before the bid closing date. Enquiries received after that time may not be answered.

Bidders should reference as accurately as possible the numbered item of the bid solicitation to which the enquiry relates. Care should be taken by Bidders to explain each question in sufficient detail in order to enable Canada to provide an accurate answer. Technical enquiries that are of a proprietary nature must be clearly marked "proprietary" at each relevant item. Items identified as "proprietary" will be treated as such except where Canada determines that the enquiry is not of a proprietary nature. Canada may edit the question(s) or may request that the Bidder do so, so that the proprietary nature of the question(s) is eliminated and the enquiry can be answered to all Bidders. Enquiries not submitted in a form that can be distributed to all Bidders may not be answered by Canada.

2.5 Applicable Laws

Any resulting contract must be interpreted and governed, and the relations between the parties determined, by the laws in force in Ontario.

Bidders may, at their discretion, substitute the applicable laws of a Canadian province or territory of their choice without affecting the validity of their bid, by deleting the name of the Canadian province or territory specified and inserting the name of the Canadian province or territory of their choice. If no change is made, it acknowledges that the applicable laws specified are acceptable to the Bidders.

2.6 Improvement of Requirement During Solicitation Period

Should bidders consider that the specifications or Statement of Work contained in the bid solicitation could be improved technically or technologically, bidders are invited to make suggestions, in writing, to the Contracting Authority named in the bid solicitation. Bidders must clearly outline the suggested improvement as well as the reason for the suggestion. Suggestions that do not restrict the level of competition nor favour a particular bidder will be given consideration provided they are submitted to the Contracting Authority at least 14 days before the bid closing date. Canada will have the right to accept or reject any or all suggestions.

2.7 Bidders' Conference

Not used.

2.8 Optional Site Visit

Not used.

2.9 Basis for Canada's Ownership of Intellectual Property

Not used.

PART 3 - BID PREPARATION INSTRUCTIONS

3.1 Bid Preparation Instructions

3.1.1 Bid Structure

Canada requests that Bidders provide their bid in separately bound sections as follows:

Section I: Technical Bid (3 hard copies and 2 electronic copies on CD or DVD)
Section II: Financial Bid (1 hard copy and 1 electronic copy on CD or DVD)
Section III: Certifications (1 hard copy and 1 electronic copy on CD or DVD)

If there is a discrepancy between the wording of the electronic copy and the hard copy, the wording of the hard copy will have priority over the wording of the soft copy.

Prices must appear in the financial bid only. No prices must be indicated in any other section of the bid.

3.1.2 Bid Format

Canada requests that Bidders follow the format instructions described below in the preparation of their bid:

a. use 8.5 x 11 inch (216 mm x 279 mm) paper;
b. use a numbering system that corresponds to the bid solicitation.

In April 2006, Canada issued a policy directing federal departments and agencies to take the necessary steps to incorporate environmental considerations into the procurement process Policy on Green Procurement (http://www.tpsgc-pwgsc.gc.ca/ecologisation-greening/achats-procurement/politique-policy-eng.html).
To assist Canada in reaching its objectives, Bidders should:

1. use paper containing fibre certified as originating from a sustainably-managed forest and containing minimum 30% recycled content; and
2. use an environmentally-preferable format including black and white printing instead of colour printing, printing double sided/duplex, using staples or clips instead of cerlox, duotangs or binders.

3.1.3 No Conditional Bids

The Bidder's bid must not be made conditionally. Any condition imposed by the Bidder will render the bid non-responsive and the bid will be given no further consideration.

3.1.4 Section I: Technical Bid

In their technical bid, Bidders should demonstrate their understanding of the requirements contained in the bid solicitation and explain how they will meet these requirements. Bidders should demonstrate their capability and describe their approach in a thorough, concise and clear manner for carrying out the work.

The technical bid should address clearly and in sufficient depth the points that are subject to the evaluation criteria against which the bid will be evaluated. Simply repeating the statement contained in the bid solicitation is not sufficient. In order to facilitate the evaluation of the bid, Canada requests that Bidders address and present topics in the order of the evaluation criteria under the same headings. To avoid duplication, Bidders may refer to different sections of their bids by identifying the specific paragraph and page number where the subject topic has already been addressed.

3.1.4.1 Substantial Information

Bidders must demonstrate their compliance with the following sections of the bid solicitation by providing substantial information describing completely and in detail how the requirement is met or addressed.

Bidders must provide with their technical bid, a document indicating clearly where the substantial information for each mandatory criterion identified in Annex 1 to Part 4 of the Bid Solicitation.

3.1.5 Section II: Financial Bid

3.1.5.1 Pricing Submission

Bidders must submit their financial bid in accordance with Schedule A and address each of the cost elements in Schedule A.

Bids must be submitted in Canadian currency.

Bidders are requested to insert “$0.00” for any of the cost elements for which it does not intend to charge. If any cost element is left blank, Canada will insert “$0.00” for that element.

3.1.5.2 Electronic Payment of Invoices – Bid

If the Bidder is willing to accept payment of invoices by Electronic Payment Instruments, the Bidder should complete Annex 1 to Part 3 of the Bid Solicitation, to identify which ones are accepted.

If Annex 1 to Part 3 of the Bid Solicitation is not completed, it will be considered as if Electronic Payment Instruments are not being accepted for payment of invoices.

Acceptance of Electronic Payment Instruments will not be considered as an evaluation criterion.

3.1.5.3 Exchange Rate Fluctuation

The requirement does not offer exchange rate fluctuation risk mitigation. Requests for exchange rate fluctuation risk mitigation will not be considered. All bids including such provision will render the bid non-responsive.

3.1.5.4 Delivery Dates

Bidders must submit their delivery dates in accordance with Schedule B.

3.1.6 Section III: Certifications

Bidders must submit the certifications and additional information required under Part 5.

PART 4 - EVALUATION PROCEDURES AND BASIS OF SELECTION

4.1 Evaluation Procedures

a. Bids will be assessed in accordance with the entire requirement of the bid solicitation including the technical and financial evaluation criteria.

b. An evaluation team composed of representatives of Canada will evaluate the bids. The evaluation team will include representatives from Public Works and Government Services Canada and the Canadian Coast Guards and/or others designated by Canada. Canada may retain any independent consultant or use any resources to evaluate any bid or portion thereof. Not all members of the evaluation team will necessarily participate in all aspects of the evaluation.

c. Where Canada has made a determination that a bid has failed any individual mandatory element of the Solicitation, Canada reserves the right to not proceed further in the evaluation of the bid and may deem the bid non-responsive.

4.1.1 Technical Evaluation

The Technical Bid Evaluation Plan and mandatory technical evaluation criteria are included in Annex 1 to Part 4 of the Bid Solicitation.

4.1.2 Financial Evaluation

1. The price of the bid will be evaluated in Canadian Dollars, Applicable Taxes excluded, Delivered Duty Paid (DDP) Destination Incoterms 2010, and customs duties included.

2. The following "Evaluated Price" equation will be used to determine the evaluated price of the bid based on the prices inserted by the Bidder in its bid Schedule A (Basis of Payment):

   Using the Items listed in Schedule A,

   Evaluated Price

$$= \sum_{i=1}^{5} [\text{ (Total QTY of Item } i\text{) x (Unit Price DDP Destination of Item } i\text{) }]$$

$$+ \text{ (Unit Price DDP Destination of Item 6)}$$

$$+ \sum_{j=7}^{14} [\text{ 0.31 x (Max. QTY of Optional Item } j\text{) x (Unit Price DDP South. Destination of Optional Item } j \text{ to Nov.30, 2018) }]$$

$$+ \sum_{j=7}^{14} [\text{ 0.03 x (Max. QTY of Optional Item } j\text{) x (Unit Price DDP North. Destination of Optional Item } j \text{ to Nov.30, 2018) }]$$

$$+ \sum_{j=7}^{14} [\text{ 0.31 x (Max. QTY of Optional Item } j\text{) x (Unit Price DDP South. Destination of Optional Item } j \text{ for Option Period 1) }]$$

$$+ \sum_{j=7}^{14} [\text{ 0.03 x (Max. QTY of Optional Item } j\text{) x (Unit Price DDP North. Destination of Optional Item } j \text{ for Option Period 1) }]$$

$$+ \sum_{j=7}^{14} [\text{ 0.30 x (Max. QTY of Optional Item } j\text{) x (Unit Price DDP South. Destination of Optional Item } j \text{ for Option Period 2) }]$$

$$+ \sum_{j=7}^{14} [\text{ 0.02 x (Max. QTY of Optional Item } j\text{) x (Unit Price DDP North. Destination of Optional Item } j \text{ for Option Period 2) }].$$

3. The quantities and factors used in the "Evaluated Price" equation are for bid evaluation purposes only. There is no guarantee that the factored quantities of the optional items used in the "Evaluated Price" equation will be procured.

4.2 Basis of Selection - Mandatory Technical Criteria

A bid must comply with the requirements of the bid solicitation and meet all mandatory technical evaluation criteria to be declared responsive. The responsive bid with the lowest evaluated price will be recommended for award of a contract.

PART 5 – CERTIFICATIONS AND ADDITIONAL INFORMATION

Bidders must provide the required certifications and additional information to be awarded a contract.

The certifications provided by Bidders to Canada are subject to verification by Canada at all times. Unless specified otherwise, Canada will declare a bid non-responsive, or will declare a contractor in default if any certification made by the Bidder is found to be untrue, whether made knowingly or unknowingly, during the bid evaluation period or during the contract period.

The Contracting Authority will have the right to ask for additional information to verify the Bidder's certifications. Failure to comply and to cooperate with any request or requirement imposed by the Contracting Authority will render the bid non-responsive or constitute a default under the Contract.

5.1 Certifications Required with the Bid

Bidders must submit the following duly completed certifications as part of their bid.

5.1.1 Integrity Provisions - Declaration of Convicted Offences

In accordance with the *Ineligibility and Suspension Policy (*http://www.tpsgc-pwgsc.gc.ca/ci-if/politique-policy-eng.html), the Bidder must provide with its bid the required documentation, as applicable, to be given further consideration in the procurement process.

Refer to https://www.tpsgc-pwgsc.gc.ca/ci-if/bulletins/renseignements-information-eng.html for additional information on the Integrity Provisions.

5.2 Certifications Precedent to Contract Award and Additional Information

The certifications and additional information listed below should be submitted with the bid but may be submitted afterwards. If any of these required certifications or additional information is not completed and submitted as requested, the Contracting Authority will inform the Bidder of a time frame within which to provide the information. Failure to provide the certifications or the additional information listed below within the time frame specified will render the bid non-responsive.

5.2.1 Integrity Provisions – Required Documentation

In accordance with the *Ineligibility and Suspension Policy (*http://www.tpsgc-pwgsc.gc.ca/ci-if/politique-policy-eng.html*)*, the Bidder must provide the required documentation, as applicable, to be given further consideration in the procurement process.

Refer to https://www.tpsgc-pwgsc.gc.ca/ci-if/bulletins/renseignements-information-eng.html for additional information on the Integrity Provisions.

5.2.2 Federal Contractors Program for Employment Equity - Bid Certification

By submitting a bid, the Bidder certifies that the Bidder, and any of the Bidder's members if the Bidder is a Joint Venture, is not named on the Federal Contractors Program (FCP) for employment equity "FCP Limited Eligibility to Bid" list available at the bottom of the page of the Employment and Social Development Canada (ESDC) - Labour's website (http://www.esdc.gc.ca/en/jobs/workplace/human_rights/employment_equity/federal_contractor_program.page?&_ga=1.229006812.1158694905.1413548969#afed).

Canada will have the right to declare a bid non-responsive if the Bidder, or any member of the Bidder if the Bidder is a Joint Venture, appears on the "FCP Limited Eligibility to Bid" list at the time of contract award.

Canada will also have the right to terminate the Contract for default if a Contractor, or any member of the Contractor if the Contractor is a Joint Venture, appears on the "FCP Limited Eligibility to Bid" list during the period of the Contract.

The Bidder must provide the Contracting Authority with a completed annex Federal Contractors Program for Employment Equity - Certification, before contract award. If the Bidder is a Joint Venture, the Bidder must provide the Contracting Authority with a completed annex Federal Contractors Program for Employment Equity - Certification, for each member of the Joint Venture.

5.2.3 Welding Certification

1. The resulting contract requires that:
   a. The Contractor and any subcontractors are certified by the Canadian Welding Bureau (CWB) to Canadian Standards Association (CSA) W47.2-11 (R2015) Division 1 or 2, Certification of Companies for Fusion Welding of Aluminium (or equivalent); and
   b. All specified welds conform to the pertinent requirements defined in CT-043-EQ-EG-001-E, CCG Welding Specification, August 2017 (refer to Appendix 1 of Annex B (Technical Statement of Requirements)) (or equivalent).

2. Welding must be performed using weld procedures and welders qualified by the CWB in accordance with the requirements of CSA W47.2-11 (R2015) Division 1 or 2, Certification of Companies for Fusion Welding of Aluminium (or equivalent).

3. Before contract award and within 21 calendar days of the written request by the Contracting Authority, the successful Bidder must submit evidence demonstrating its and its subcontractor's certification by CWB in accordance with the CSA welding standards.

4. The Bidder may propose alternative standards to CSA W47.2-11 (2015) Division 1 or 2, Certification of Companies for Fusion Welding of Aluminum, and the standards referenced in CT-043-EQ-EG-001-E, CCG Welding Specification to Canada, August 2017. For each proposed alternative welding standard, the Bidder must demonstrate that the technical intent of CSA W47.2-11 (2015) Division 1 or 2, Certification of Companies for Fusion Welding of Aluminum, and the standards referenced in CT-043-EQ-EG-001-E, CCG Welding Specification, August 2017 is met. The demonstration of technical intent must be achieved by a compliance audit conducted by either (or both) the Canadian Coast Guard and the CWB before contract award and within 21 calendar days of the written request by the Contracting Authority.

PART 6 - SECURITY, FINANCIAL AND OTHER REQUIREMENTS

6.1 Security Requirements

Not used.

6.2 Financial Capability

Not used.

6.3 Bid Financial Security

Not used.

6.4 Controlled Goods Requirement

Not used.

6.5 Insurance Requirements

Not used.

PART 7 - RESULTING CONTRACT CLAUSES

The following clauses and conditions apply to and form part of any contract resulting from the bid solicitation.

7.1 Requirement

7.1.1 Requirement

The Contractor must provide the goods, services or both described in the Contract, including all the Annexes, Schedules, Appendices, and any other identified documents, to Canada in accordance with, and at the prices and/or rates stated in the Contract.

7.1.2 Optional Goods and/or Services

The Contractor grants to Canada the irrevocable options to acquire goods, services or both described in the Contract, including all the Annexes, Schedules, Appendices, and any other identified documents, under the same conditions and at the prices and/or rates stated in the Contract.

The options may only be exercised by the Contracting Authority and will be evidenced, for administrative purposes only, through a contract amendment. The Contracting Authority may exercise the options on multiple occasions and at any time before the expiry of the Contract by sending a written notice to the Contractor.

7.1.3 Shelf Life

The Contractor must ensure that all curtain boom fabric contains 90% of the authorized shelf life as listed in ISO 2230 at the date of delivery to Canada.

7.1.4 Clients

7.1.4.1 Primary Client

The primary client of the Contract is the Department of Fisheries and Oceans - Canadian Coast Guard.

7.1.4.2 Potential Clients

The Contract may also be utilized for deliveries in Canada to other clients including other federal, provincial, territorial, and municipal government organizations and Crown corporations if authorized by the Contracting Authority after consultation with the Department of Fisheries and Oceans - Canadian Coast Guard.

In the case of a delivery to a client other than the Department of Fisheries and Oceans - Canadian Coast Guard, terms (such as “Canada” and “Canadian Coast Guard”) used throughout the Contract may be replaced to better reflect the client for that specific delivery.

7.1.5 Work Arisings

Additional work that is not described in the Statement of Work but that is required to support the requirement and that would be considered to fall within the overall scope of the Work, may be incorporated into the Contract in accordance with Schedule A, Basis of Payment.

7.1.6 Task Authorization

7.1.6.1 Task Authorization Process

Task Authorization*:*

The Work or a portion of the Work to be performed under the Contract will be on an "as and when requested basis" using a Task Authorization (TA). The Work described in the TA must be in accordance with the scope of the Contract.

Task Authorization Process:

1. The Technical Authority will provide the Contractor with a description of the task using the "Task Authorization" form specified in Annex C.

2. The Task Authorization (TA) will contain the details of the activities to be performed, a description of the deliverables, and a schedule indicating completion dates for the major activities or submission dates for the deliverables. The TA will also include the applicable basis (bases) and methods of payment as specified in the Contract.

3. The Contractor must provide the Technical Authority, within 7 calendar days of its receipt, the proposed total estimated cost for performing the task and a breakdown of that cost, established in accordance with the Basis of Payment specified in the Contract.

4. The Contractor must not commence work until a TA authorized by the Technical Authority has been received by the Contractor. The Contractor acknowledges that any work performed before a TA has been received will be done at the Contractor's own risk.

7.1.6.2 Task Authorization Limit

The Technical Authority may authorize individual task authorizations up to a limit of $(to be announced at contract award), Applicable Taxes included, inclusive of any revisions.

Any task authorization to be issued in excess of that limit must be authorized by the Technical Authority and Contracting Authority before issuance.

7.1.6.3 Canada's Obligation - Portion of the Work - Task Authorizations

Canada's obligation with respect to the portion of the Work under the Contract that is performed through task authorizations is limited to the total amount of the actual tasks performed by the Contractor.

7.1.6.4 Periodic Usage Reports - Contracts with Task Authorizations

The Contractor must compile and maintain records on its provision of services to the federal government under authorized Task Authorizations issued under the Contract.

The Contractor must provide this data in accordance with the reporting requirements detailed below. If some data is not available, the reason must be indicated. If services are not provided during a given period, the Contractor must still provide a "nil" report.

The data must be submitted on a quarterly basis to the Contracting Authority.
The quarterly periods are defined as follows:
1st quarter: April 1 to June 30;
2nd quarter: July 1 to September 30;
3rd quarter: October 1 to December 31; and
4th quarter: January 1 to March 31.

The data must be submitted to the Contracting Authority no later than 21 calendar days after the end of the reporting period.

Reporting Requirement - Details

A detailed and current record of all authorized tasks must be kept for each contract with a task authorization process. This record must contain:

For each authorized task:
i. the authorized task number or task revision number(s);
ii. a title or a brief description of each authorized task;
iii. the total estimated cost specified in the authorized Task Authorization (TA) of each task, exclusive of Applicable Taxes;
iv. the total amount, exclusive of Applicable Taxes, expended to date against each authorized task;
v. the start and completion date for each authorized task; and
vi. the active status of each authorized task, as applicable.

For all authorized tasks:
i. the amount (exclusive of Applicable Taxes) specified in the contract (as last amended, as applicable) as Canada's total liability to the contractor for all authorized TAs; and
ii. the total amount, exclusive of Applicable Taxes, expended to date against all authorized TAs.

7.2 Standard Clauses and Conditions

All clauses and conditions identified in the Contract by number, date and title are set out in the *Standard Acquisition Clauses and Conditions Manual* (https://buyandsell.gc.ca/policy-and-guidelines/standard-acquisition-clauses-and-conditions-manual) issued by Public Works and Government Services Canada.

7.2.1 General Conditions

2030 (2016-04-04), General Conditions - Higher Complexity - Goods, and 1031-2 (2012-07-16), Contract Cost Principles, apply to and form part of the Contract.

7.2.2 Supplemental General Conditions

4010 (2012-07-16), Services – Higher Complexity, apply to and form part of the Contract.

7.2.3 Public Announcement

The Contractor must not make any public announcement related to the Contract without having previously obtained the written permission of the Contracting Authority.

7.3 Security Requirements

There is no security requirement applicable to the Contract.

7.4 Term of Contract

7.4.1 Period of the Contract

The period of the Contract is from Date of Contract to November 30, 2018 inclusive.

7.4.2 Delivery

The Contractor must make complete delivery within the Delivery Timeframe(s) identified in Schedule B.

7.4.3 Options to Extend the Contract

The Contractor grants to Canada the irrevocable options to extend the term of the Contract by up to two additional periods as specified below under the same conditions:
Option Period 1: December 1, 2018 to January 31, 2020; and
Option Period 2: February 1, 2020 to January 31, 2021.

The Contractor agrees that, during the extended period of the Contract, it will be paid in accordance with the applicable provisions as set out in the Basis of Payment.

The options may only be exercised by the Contracting Authority, and will be evidenced for administrative purposes only, through a contract amendment. The Contracting Authority may exercise the options on multiple occasions and at any time before the expiry of the Contract by sending a written notice to the Contractor.

7.4.4 Comprehensive Land Claims Agreements (CLCAs)

This procurement is subject to the Nunavut Agreement (also referred to as Nunavut Land Claims Agreement), Inuvialuit Final Agreement, and Gwich'in Comprehensive Land Claim Agreement.

The Contractor should consult the following business directories for assistance in the delivery of the goods and services to the final destinations in the Comprehensive Land Claims Agreement (CLCA) areas:

a. the Inuit for the Nunavut Land Claims Agreement:
http://inuitfirm.tunngavik.com
b. the Inuvialuit for the Inuvialuit Final Agreement:
http://www.irc.inuvialuit.com/business/inuvialuit-business-list-ibl
c. the Gwich'in Business directory for the Gwich'in Land Claim Agreement:
http://gwichin.biz/index.php/registered-business.

The Contract with Task Authorizations is to establish the delivery of the requirement detailed under the Contract, to the Identified Users across Canada, including areas subject to Comprehensive Land Claims Agreements.

7.4.5 Delivery Points

Delivery of the requirement will be made to delivery destination point(s) specified in Schedule B of the Contract and as directed by the Contracting Authority.

7.5 Authorities

7.5.1 Contracting Authority

The Contracting Authority for the Contract is:

Michal Szczesniak
Public Works and Government Services Canada
Acquisitions Program
Pacific Region – Marine Acquisitions
1230 Government Street, Suite 401, Victoria, BC V8W 3X4
Telephone: 1.250.507.0647
E-mail: michal.szczesniak@pwgsc-tpsgc.gc.ca

The Contracting Authority is responsible for the management of the Contract and any changes to the Contract must be authorized in writing by the Contracting Authority. The Contractor must not perform work in excess of or outside the scope of the Contract based on verbal or written requests or instructions from anybody other than the Contracting Authority.

7.5.2 Project Authority

The Project Authority for the Contract is:

< to be announced upon contract award >

The Project Authority is the representative of the Canadian Coast Guard and is responsible for overseeing the ongoing project management content of the work on behalf of the Canadian Coast Guard. Project matters may be discussed with the Project Authority, however the Project Authority has no authority to authorize changes to the scope of the Work. Changes to the scope of the Work can only be made through a contract amendment issued by the Contracting Authority.

7.5.3 Technical Authority

The Technical Authority for the Contract is:

< to be announced upon contract award >

The Technical Authority is the representative of the department or agency for whom the Work is being carried out under the Contract and is responsible for all matters concerning the technical content of the Work under the Contract. Technical matters may be discussed with the Technical Authority; however, the Technical Authority has no authority to authorize changes to the scope of the Work. Changes to the scope of the Work can only be made through a contract amendment issued by the Contracting Authority.

7.5.4 Contractor's Representative

Name: _____

Title: _____

Organization: _____

Address: _____

Telephone: _____

E-mail: _____

7.6 Proactive Disclosure of Contracts with Former Public Servants

By providing information on its status, with respect to being a former public servant in receipt of a *Public Service Superannuation Act* (PSSA) pension, the Contractor has agreed that this information will be reported on departmental websites as part of the published proactive disclosure reports, in accordance with Contracting Policy Notice: 2012-2 of the Treasury Board Secretariat of Canada.

7.7 Payment

7.7.1 Bases of Payment

7.7.1.1 Basis of Payment - Firm Price

In consideration of the Contractor satisfactorily completing its obligations under the Contract, the Contractor will be paid firm prices as specified in Schedule A. Customs duties are included and Applicable Taxes are extra.

7.7.1.2 Basis of Payment - Individual Task Authorizations

The Contractor will be paid for the Work specified in the authorized task authorization, in accordance with Schedule A.

Canada's liability to the Contractor under the authorized task authorization must not exceed the limitation of expenditure or ceiling price specified in the authorized task authorization. Customs duties are included and Applicable Taxes are extra.

No increase in the liability of Canada or in the price of the Work specified in the authorized task authorization resulting from any design changes, modifications or interpretations of the Work will be authorized or paid to the Contractor unless these design changes, modifications or interpretations have been authorized, in writing, by the Contracting Authority before their incorporation into the Work.

7.7.2 Limitation of Price

Canada will not pay the Contractor for any design changes, modifications or interpretations of the Work unless they have been approved, in writing, by the Contracting Authority before their incorporation into the Work.

7.7.2.1 Limitation of Expenditure - Cumulative Total of all Task Authorizations

1. Canada's total liability to the Contractor under the Contract for all authorized Task Authorizations (TAs), inclusive of any revisions, must not exceed the sum of $(to be announced at contract award). Customs duties are included and Applicable Taxes are extra.

2. No increase in the total liability of Canada will be authorized or paid to the Contractor unless an increase has been approved, in writing, by the Contracting Authority.

3. The Contractor must notify the Contracting Authority in writing as to the adequacy of this sum:
   a. when it is 75 percent committed, or
   b. four (4) months before the contract expiry date, or
   c. as soon as the Contractor considers that the sum is inadequate for the completion of the Work required in all authorized TAs, inclusive of any revisions, whichever comes first.

4. If the notification is for inadequate contract funds, the Contractor must provide to the Contracting Authority, a written estimate for the additional funds required. Provision of such information by the Contractor does not increase Canada's liability.

7.7.3 Travel Expenses - No allowance for profit and overhead

The Contractor will be reimbursed for the authorized travel expenses reasonably and properly incurred in the performance of the Work, at cost, in accordance with Contract Cost Principles 1031-2, with no allowance for profit and/or administrative overhead. All payments are subject to government audit.

7.7.4 Multiple Payments

Canada will pay the Contractor upon completion and delivery of units in accordance with the payment provisions of the Contract if:

a. an accurate and complete invoice and any other documents required by the Contract have been submitted in accordance with the invoicing instructions provided in the Contract;
b. all such documents have been verified by Canada; and
c. the Work delivered has been accepted by Canada.

7.7.5 Milestone Payments - Not subject to holdback

Canada will make milestone payments in accordance with the Schedule of Milestones detailed in Schedule B and the payment provisions of the Contract if:

a. an accurate and complete claim for payment using PWGSC-TPSGC 1111, Claim for Progress Payment (http://www.tpsgc-pwgsc.gc.ca/app-acq/forms/1111-eng.html), and any other document required by the Contract have been submitted in accordance with the invoicing instructions provided in the Contract;
b. all the certificates appearing on form PWGSC-TPSGC 1111 have been signed by the respective authorized representatives; and
c. all work associated with the milestone and as applicable any deliverable required has been completed and accepted by Canada.

7.7.6 Electronic Payment of Invoices – Contract *(as applicable)*

The Contractor accepts to be paid using any of the following Electronic Payment Instrument(s):

a. Visa Acquisition Card;
b. MasterCard Acquisition Card;
c. Direct Deposit (Domestic and International);
d. Electronic Data Interchange (EDI);
e. Wire Transfer (International Only).

7.7.7 Time Verification

Time charged and the accuracy of the Contractor's time recording system are subject to verification by Canada, before or after payment is made to the Contractor. If verification is done after payment, the Contractor must repay any overpayment, at Canada's request.

7.7.8 Discretionary Audit *(if applicable)*

The Contractor must provide, on the Contracting Authority's request, one or more of the following price support, if applicable:

a. a current published price list indicating the percentage discount available to Canada; or
b. copies of paid invoices for the like quality and quantity of the goods, services or both sold to other customers; or
c. a price breakdown showing the cost of direct labour, direct materials, purchased items, engineering and plant overheads, general and administrative overhead, transportation, etc., and profit; or
d. price or rate certifications; or
e. any other supporting documentation as requested by Canada.

The Contractor's certification that the price or rate is not in excess of the lowest price or rate charged anyone else, including the Contractor's most favoured customer, for the like quality and quantity of the goods, services or both, is subject to verification by government audit, at the discretion of Canada, before or after payment is made to the Contractor.

If the audit demonstrates that the certification is in error after payment is made to the Contractor, the Contractor must, at the discretion of Canada, make repayment to Canada in the amount found to be in excess of the lowest price or rate or authorize the retention by Canada of that amount by way of deduction from any sum of money that may be due or payable to the Contractor pursuant to the Contract.

If the audit demonstrates that the certification is in error before payment is made, the Contractor agrees that any pending invoice will be adjusted by Canada in accordance with the results of the audit. It is further agreed that if the Contract is still in effect at the time of the verification, the price or rate will be lowered in accordance with the results of the audit.

7.7.9 Taxes - Foreign-based Contractor *(if applicable)*

Unless specified otherwise in the Contract, the price includes no amount for any federal excise tax, state or local sales or use tax, or any other tax of a similar nature, or any Canadian tax whatsoever. The price, however, includes all other taxes. If the Work is normally subject to federal excise tax, Canada will, upon request, provide the Contractor a certificate of exemption from such federal excise tax in the form prescribed by the federal regulations.

Canada will provide the Contractor evidence of export that may be requested by the tax authorities. If, as a result of Canada's failure to do so, the Contractor has to pay federal excise tax, Canada will reimburse the Contractor if the Contractor takes such steps as Canada may require to recover any payment made by the Contractor. The Contractor must refund to Canada any amount so recovered.

7.8 Invoicing Instructions

1. The Contractor must submit a claim for payment using form PWGSC-TPSGC 1111, Claim for Progress Payment.

   Each claim must show:
   a. all information required on form PWGSC-TPSGC 1111;
   b. all applicable information detailed under the section entitled "Invoice Submission" of the general conditions; and
   c. the description and value of the milestone claimed as detailed in the Contract.

   As applicable, each claim must be supported by:
   a. a copy of time sheets to support the time claimed; and
   b. a copy of the invoices, receipts, vouchers for all direct expenses and travel expenses.

2. Applicable Taxes must be calculated on the total amount of the claim before the holdback is applied. At the time the holdback is claimed, there will be no Applicable Taxes payable as it was claimed and payable under the previous claims for progress payments.

3. The Contractor must prepare and certify the claim on form PWGSC-TPSGC 1111, and e-mail it to the Contracting Authority for review. The Contracting Authority will then forward the claim to the Project Authority for certification and onward submission to the client's payment Office for the remaining certification and payment action.

4. The Contractor must not submit claims until all work identified in the claim is completed.

7.9 Certifications and Additional Information

7.9.1 Compliance

Unless specified otherwise, the continuous compliance with the certifications provided by the Contractor in its bid or precedent to contract award, and the ongoing cooperation in providing additional information are conditions of the Contract and failure to comply will constitute the Contractor in default. Certifications are subject to verification by Canada during the entire period of the Contract.

7.9.2 Federal Contractors Program for Employment Equity - Default by the Contractor

The Contractor understands and agrees that, when an Agreement to Implement Employment Equity (AIEE) exists between the Contractor and Employment and Social Development Canada (ESDC)-Labour, the AIEE must remain valid during the entire period of the Contract. If the AIEE becomes invalid, the name of the Contractor will be added to the "FCP Limited Eligibility to Bid" list. The imposition of such a sanction by ESDC will constitute the Contractor in default as per the terms of the Contract.

7.9.3 Welding Certification

1. The Contractor must ensure that:
   a. The Contractor and any subcontractor are certified by the CWB to CSA W47.2-11 (R2015) Division 1 or 2, Certification of Companies for Fusion Welding of Aluminium (or equivalent); and
   b. All specified welds conform to the pertinent requirements defined in CT-043-EQ-EG-001-E, CCG Welding Specification, August 2017 (refer to Appendix 1 of Annex B (Technical Statement of Requirements)) (or equivalent).

2. In addition, welding must be done in accordance with the requirements of the applicable drawings and specifications.

3. Before the commencement of any fabrication work, and upon request from the Technical Authority, the Contractor must provide approved welding procedures and/or a list of welding personnel they intend to use in the performance of the Work. The list must identify the CWB welding procedure qualifications attained by each of the personnel listed and must be accompanied by a copy of each person's current CWB certification to CSA welding standards.

4. The Contractor may propose alternative standards to CSA W47.2-11 (2015) Division 1 or 2, Certification of Companies for Fusion Welding of Aluminum, and the standards referenced in CT-043-EQ-EG-001-E, CCG Welding Specification to Canada, August 2017. For each proposed alternative welding standard, the Contractor must demonstrate that the technical intent of CSA W47.2-11 (2015) Division 1 or 2, Certification of Companies for Fusion Welding of Aluminum, and the standards referenced in CT-043-EQ-EG-001-E, CCG Welding Specification, August 2017 is met. The demonstration of technical intent must be achieved by a compliance audit conducted by either (or both) the Canadian Coast Guard and the CWB before contract award and within 21 calendar days of the written request by the Contracting Authority.

7.10 Applicable Laws

The Contract must be interpreted and governed, and the relations between the parties determined, by the laws in force in _____.

7.11 Priority of Documents

If there is a discrepancy between the wording of any documents that appear on the list, the wording of the document that first appears on the list has priority over the wording of any document that subsequently appears on the list.

a. the Articles of Agreement;
b. Schedule A, Basis of Payment;
c. Schedule B, Deliveries and Milestones;
d. the supplemental general conditions 4010 (2012-07-16), Services - Higher Complexity;
e. the general conditions 2030 (2016-04-04), General Conditions - Higher Complexity - Goods;
f. 1031-2 (2012-07-16), Contract Cost Principles;
g. Annex A, Statement of Work;
h. Annex B, Technical Statement of Requirement;
i. the signed Task Authorizations (including all of its annexes, if any);
j. the Contractor's bid dated _____.

7.12 Foreign Nationals *(as applicable)*

Foreign Nationals (Canadian Contractor):
The Contractor must comply with Canadian immigration requirements applicable to foreign nationals entering Canada to work temporarily in fulfillment of the Contract. If the Contractor wishes to hire a foreign national to work in Canada to fulfill the Contract, the Contractor should immediately contact the nearest Service Canada regional office to enquire about Citizenship and Immigration Canada's requirements to issue a temporary work permit to a foreign national. The Contractor is responsible for all costs incurred as a result of non-compliance with immigration requirements.

- OR -

Foreign Nationals (Foreign Contractor):
L'entrepreneur doit se conformer aux exigences canadiennes en matière d'immigration relatives aux ressortissants étrangers qui doivent séjourner temporairement au Canada pour exécuter le contrat. Si l'entrepreneur souhaite embaucher un ressortissant étranger pour travailler au Canada, pour exécuter le contrat, il devrait communiquer immédiatement avec le bureau régional de Service Canada le plus près, pour obtenir des renseignements sur les exigences de Citoyenneté et Immigration Canada en ce qui concerne la délivrance d'un permis de travail temporaire à un ressortissant étranger. L'entrepreneur doit acquitter tous les frais occasionnés par suite de la non-conformité aux exigences en matière d'immigration.

7.13 Insurance

The Contractor is responsible for deciding if insurance coverage is necessary to fulfill its obligation under the Contract and to ensure compliance with any applicable law. Any insurance acquired or maintained by the Contractor is at its own expense and for its own benefit and protection. It does not release the Contractor from or reduce its liability under the Contract.

7.14 Controlled Goods Program

Not used.

7.15 Limitation of Liability

Not used.

7.16 Access to Government Site, Facility, or Equipment

7.16.1 Government Site Regulations

The Contractor must comply with all regulations, instructions and directives in force on the site where the Work is performed.

7.16.2 Access to Facilities and Equipment

Canada's facilities, equipment, documentation and personnel are not automatically at the disposal of the Contractor. If access to government premises, computer systems (micro computer network), working space, telephones, terminals, documentation and personnel for consultation is required by the Contractor to perform the Work, the Contractor must advise the Contracting Authority of the need for such access in a timely fashion. If the Contractor's request for access is approved by Canada and arrangements are made to provide access to the Contractor, the Contractor, its subcontractors, agents and employees must comply with all the conditions applicable at the Work site. The Contractor must further ensure that the facilities and equipment are used solely for the performance of the Contract.

7.16.3 Identification Badge

Any person assigned to the performance of any part of the Work that is performed on government premises must wear in a conspicuous place the identification badge issued to that person by Canada.

When a person is required to wear a safety helmet, the Contractor, if requested to do so by the Contracting Authority, must paint the number appearing on the badge on the front of the safety helmet.

7.17 Shipping Instructions

7.17.1 Delivery and Unloading

1. Delivery trucks must be equipped with an unloading device which will permit unloading at sites with no hydraulic, stationary or other type of unloading facility.

2. When making deliveries, sufficient personnel must be provided to permit unloading of any type of vehicle without the assistance of federal government personnel.

3. At some sites, the delivery truck must be unloaded while parked at the curb. When material is placed on the sidewalk, it must be placed in proximity to the designated entrance so as to be readily accessible to transport by mechanical handling equipment utilized by site personnel.

7.17.2 Delivery Instructions

1. Goods must be consigned to the destination specified in the Contract and delivered: Delivered Duty Paid (DDP) (specified destination) Incoterms 2010.

2. Unless otherwise directed, delivery must be made by the most economical means. The Contractor is responsible for all delivery charges, administration, costs and risks of transport and customs clearance, including the payment of customs duties and Applicable Taxes.

3. The Contractor must deliver the goods by appointment only. The Contractor or its carrier must arrange delivery appointments by contacting the designated contact person. The consignee may refuse shipments when prior arrangements have not been made. Refer to Schedule B for additional instructions.

7.17.3 Wood Packaging Materials

All wood packaging materials used in shipping must conform to the International Standards for Phytosanitary Measures No. 15: Regulation of Wood Packaging Material in International Trade (ISPM 15) (https://www.ippc.int/en/core-activities/standards-setting/ispms/).

Pertinent additional information on Canada's import and export programs is provided in the following Canadian Food Inspection Agency policy directives:

D-98-08 - Entry Requirements for Wood Packaging Materials Produced in All Areas Other Than the Continental United States (http://www.inspection.gc.ca/plants/plant-protection/directives/forestry/d-98-08/eng/1323963831423/1323964135993)

D-13-01 – Canadian Heat Treated Wood Products Certification Program (HT Program) (http://www.inspection.gc.ca/plants/forestry/exports/ht-program/eng/1319462565070/1319462677967).

7.17.4 Dangerous Goods / Hazardous Products - Labelling and Packaging Compliance

1. The Contractor must ensure proper labelling and packaging in the supply and shipping of dangerous goods/hazardous products to the Government of Canada.

2. The Contractor will be held liable for any damages caused by improper packaging, labelling or carriage of dangerous goods/hazardous products.

3. The Contractor must clearly mark all merchandise labels with the percentage of volume that is a hazardous item. Failure to do so will result in the Contractor being held responsible for damages caused in the movement of goods/products by government vehicles or government personnel.

4. The Contractor must adhere to all applicable laws regarding dangerous goods/hazardous products.

7.17.5 Transportation of Dangerous Goods/Hazardous Products

The Contractor must obtain the authorization from the Department of Transport to transport dangerous goods/hazardous products before the carrier may accept a charter involving the transportation of dangerous goods/hazardous products.

7.17.6 Shipment of Dangerous Goods/Hazardous Products

The Contractor must label and ship dangerous goods/hazardous products falling within the Transportation of Dangerous Goods Act, 1992, c.34 (http://laws-lois.justice.gc.ca/eng/acts/t-19.01/) and the Hazardous Products Act, R.S.C. 1985, c. H-3 (http://laws-lois.justice.gc.ca/eng/acts/H-3/) and their regulation(s) in accordance with the said Acts and regulation(s) accompanied by the required safety data sheet(s) completed in both English and French.

7.17.7 Delivery of Dangerous Goods/Hazardous Products

1. The Contractor must mark dangerous goods/hazardous products which are classed as dangerous/hazardous as follows:
   a. shipping container - in accordance with the Transportation of Dangerous Goods Act, 1992, c. 34 (http://laws-lois.justice.gc.ca/eng/acts/T-19.01/); and
   b. immediate product container - in accordance with the Hazardous Products Act, R.S., 1985, c. H-3 (http://laws-lois.justice.gc.ca/eng/acts/H-3/).

2. The Contractor must provide bilingual Safety Data Sheets, indicating any applicable NATO Stock Number as follows:
   a. two hard copies:
      i. one copy to be enclosed with the shipment, and
      ii. one copy to be mailed to:
      < to be provided at contract award >
   b. one copy sent in any electronic format to the following address:
      < to be provided at contract award >.

3. The Contractor will be responsible for any damages caused by improper packaging, labelling or carriage of dangerous goods/hazardous products.

4. The Contractor must ensure they adhere to all levels of regulations regarding dangerous goods/hazardous products as set forth by federal, provincial and municipal laws and by-laws.

5. The Contractor must contact the Technical Authority at least 72 hours before shipping dangerous goods/hazardous products in order to schedule a receiving time.

7.18 Inspection and Acceptance

As part of the inspection and acceptance process set out in 2030 (2016-04-04), General Conditions - Higher Complexity – Goods, the Contractor shall be required to perform the Commissioning process set out in Statement of Work, and, if requested by Canada, the Discretionary Inspection process set out in this clause.

1. Commissioning – See Statement of Work

2. Discretionary Inspection

   a. The Contractor shall, if directed by Canada, make a single incision lengthwise up to 50 feet at a starting point of Canada's choosing ("Sample") for every 1000 feet of curtain boom ("Inspection Lot") in order to expose the top tension member, flotation element, and ballast chain.

b. In the event an Inspection Lot contains one (1) major defect, or two (2) minor defects (as per Table 1: Boom defects), Canada shall have the right to reject the Inspection Lot.

c. In the event three (3) Inspection Lots are rejected, Canada shall have the right to reject the entire curtain boom delivery without further inspection.

d. Where Inspection Lots(s) have been rejected, the Contractor is in default in carrying out its obligations under the Contract and Canada may exercise its rights under Contract, including but not limited to requiring the correction or replacement of the rejected delivery at the Contractor's expense, or terminating the Contract, in whole or part, for default.

e. In the event Canada has accepted an Inspection Lot subjected to Discretionary Inspection, Canada will raise a Task Authorization for repair of such Inspection Lot under the following conditions:
   a. Canada shall direct whether the repair is performed on-site or off-site;
   b. The Inspection Lot must be returned to Canada within 30 days at an operationally-ready state;
   c. Canada shall be responsible for all delivery and re-delivery charges;
   d. The repaired Inspection Lot shall be subject to the commissioning process as detailed in Section 3.3 of Annex A, at Canada's discretion.

Table 1: Boom defects

Major defect
Boom is not a standard, commercial product
Boom parts, assemblies, accessories, and spare parts are not interchangeable
Boom design and construction is not as specified (e.g., dimensions not as specified)
Materials are not as specified
Material coating is separated from base material
Abraded or torn material
Material seams are not RF welded
Foam cracked, damaged, or not as specified
Anchor points, handholds, tension members, or end connectors are not as specified
Attachments and hardware are not as specified
Workmanship is inferior and not as specified (e.g., extrusions are not free from burrs and sharp edges, bolt holes are not accurately drilled to coincide with bolts or other fittings)
Surfaces are not cleaned or treated as specified
Boom accessory package components are missing or damaged
Minor defect
Product identifiers are omitted or incorrect
Colour of boom is not as specified

SCHEDULE A

BASIS OF PAYMENT

The Bidder must complete the fill-ins and tables in Schedule A by providing firm unit prices for each item for each period, as applicable, in Canadian currency.

1. General

a. Prices are based on Delivered Duty Paid (DDP) Destination Incoterms 2010.

b. Prices include customs duties but Applicable Taxes are extra.

c. Items must be invoiced based on the price established for the date of the order (via Contract or Contract Amendment) and not the delivery or acceptance date.
For example, if prices were based on the calendar year and a contract amendment was issued on December 31, 2017 to purchase a widget but the widget was not delivered until January 1, 2018, the contract amendment and invoice for the order would reflect the Year 2017 price and not the Year 2018 price.

2. Currency

All prices are in Canadian currency.

3. Required Goods and Services from Date of Contract to November 30, 2018

Item #	Item Description[1]	Total QTY[2]	Firm Unit Price DDP Destination[3]
1	**Curtain Boom** Supply and commission 1000 ft of Curtain Boom, and applicable DIDs: DID-SE-02, DID-SE-04, DID-IE-01. Note: Connector type will be determined at the time of order by ordering the required quantities of Optional Item 13 and/or Optional Item 14.	67	
2	**Curtain Boom Accessory Package** Supply and commission a curtain boom accessory package for Curtain Boom, and applicable DIDs: DID-SE-02, DID-SE-04, DID-IE-01.	67	
3	**Storage Container (Type 1D) with Curtain Boom** Supply and commission a Type 1CC Storage Container which includes a minimum of ten, 50 foot curtain boom sections loaded into the storage container and the remainder of 1000 ft of Curtain Boom not loaded into the storage container, and applicable DIDs: DID-SE-02, DID-SE-04, DID-IE-01. Note: Connector type will be determined at the time of order by ordering the required quantities of Optional Item 13 and/or Optional Item 14.	1	
4	**Technical Maintenance Training** Conduct Technical Maintenance Training Session. Notes: a. Units indicate total number of sessions; and b. No travel costs are to be included – Travel will be paid in accordance with Article 7.7.3 of the Contract.	4	
5	**Operational Training** Conduct Operational Training Session. Notes: a. Units indicate total number of sessions; and b. No travel costs are to be included – Travel will be paid in accordance with clause Article 7.7.3 of the Contract.	4	

Item #	Item Description[1]	Total QTY[2]	Firm Unit Price DDP Destination[3]
6	**Documentation** Generate and supply all of the required documents including DIDs: DID-PM-01, DID-PM-02, DID-PM-03, DID-SE-01, DID-SE-03, DID-TR-01, DID-TR-02, DID-ILS-01, DID-ILS-02, DID-ILS-03, DID-ILS-04, DID-ILS-05, DID-ILS-06. Note: Refer to Schedule B, Paragraph 2, for Milestone Payments.	N/A	

Notes:

[1]: A brief description of the item that must be delivered in accordance with the Contract including all Annexes and Appendices.

[2]: The total number of units that are required across all delivery locations. Schedule B will identify the quantity of units that are required for each known delivery location.

[3]: See Schedule B for destinations.

N/A: Not Applicable.

4. Optional Goods and/or Services

			To November 30, 2018		Option Period 1		Option Period 2	
Item #	**Item Description[4]**	**Max. QTY[5]**	**Firm Unit Price DDP (South.) Destination[6]**	**Firm Unit Price DDP (North.) Destination[7]**	**Firm Unit Price DDP (South.) Destination[6]**	**Firm Unit Price DDP (North.) Destination[7]**	**Firm Unit Price DDP (South.) Destination[6]**	**Firm Unit Price DDP (North.) Destination[7]**
7	**Curtain Boom** Supply and commission 1000 ft of Curtain Boom, and applicable DIDs: DID-SE-02, DID-SE-04, DID-IE-01. Note: Connector type will be determined at the time of order by ordering the required quantities of Optional Item 13 and/or Optional Item 14.	330						
8	**Curtain Boom Accessory Package** Supply and commission a curtain boom accessory package for Curtain Boom, and applicable DIDs: DID-SE-02, DID-SE-04, DID-IE-01.	330						

			To November 30, 2018		Option Period 1		Option Period 2	
Item #	**Item Description[4]**	**Max. QTY[5]**	**Firm Unit Price DDP (South.) Destination[6]**	**Firm Unit Price DDP (North.) Destination[7]**	**Firm Unit Price DDP (South.) Destination[6]**	**Firm Unit Price DDP (North.) Destination[7]**	**Firm Unit Price DDP (South.) Destination[6]**	**Firm Unit Price DDP (North.) Destination[7]**
9	**Storage Container (Type 1CC) with Curtain Boom** Supply and commission a Type 1CC Storage Container which includes a minimum of ten, 50 foot curtain boom sections loaded into the storage container and the remainder of 1000 ft of Curtain Boom not loaded into the storage container, and applicable DIDs: DID-SE-02, DID-SE-04, DID-IE-01. Note: Connector type will be determined at the time of order by ordering the required quantities of Optional Item 13 and/or Optional Item 14.	60						

			To November 30, 2018		Option Period 1		Option Period 2	
Item #	**Item Description[4]**	**Max. QTY[5]**	**Firm Unit Price DDP (South.) Destination[6]**	**Firm Unit Price DDP (North.) Destination[7]**	**Firm Unit Price DDP (South.) Destination[6]**	**Firm Unit Price DDP (North.) Destination[7]**	**Firm Unit Price DDP (South.) Destination[6]**	**Firm Unit Price DDP (North.) Destination[7]**
10	**Storage Container (Type 1D) with Curtain Boom** Supply and commission a Type 1D Storage Container which includes a minimum of ten, 50 foot curtain boom sections loaded into the storage container and the remainder of 1000 ft of Curtain Boom not loaded into the storage container. Note: Connector type will be determined at the time of order by ordering the required quantities of Optional Item 13 and/or Optional Item 14.	28						
11	**Technical Maintenance Training** Conduct Technical Maintenance Training Session. Notes: a. Units indicate total number of sessions; and b. No travel costs are to be included – Travel will be paid in accordance with Article 7.7.3 of the Contract.	22						

			To November 30, 2018		Option Period 1		Option Period 2	
Item #	**Item Description[4]**	**Max. QTY[5]**	**Firm Unit Price DDP (South.) Destination[6]**	**Firm Unit Price DDP (North.) Destination[7]**	**Firm Unit Price DDP (South.) Destination[6]**	**Firm Unit Price DDP (North.) Destination[7]**	**Firm Unit Price DDP (South.) Destination[6]**	**Firm Unit Price DDP (North.) Destination[7]**
12	**Operational Training** Conduct Operational Training Session. Notes: a. Units indicate total number of sessions; and b. No travel costs are to be included – Travel will be paid in accordance with Article 7.7.3 of the Contract.	22						
13	**Curtain Boom End Connector (Slide type Connector)** Supply and installation of a slide type connector at each end of the 50 foot curtain boom section.	6600						
14	**Curtain Boom End Connector (Z type Connector)** Supply and installation of a Z type connector at each end of the 50 foot curtain boom section.	6600						

Notes:

[4]: A brief description of the item that must be delivered in accordance with the Contract including all Annexes and Appendices.

[5]: Optional Items may be procured on as many occasions as necessary up to the identified maximum total quantity.

[6]: Southern destinations will be within Canada (but not in the Northwest Territories, Nunavut, or Yukon) but specific locations will to be determined at the time of the order.

[7]: Northern destinations will be within the Northwest Territories, Nunavut, or Yukon but specific locations will to be determined at the time of the order.

7. Work Arisings and Task Authorizations

The provision of other parts, tools, equipment, spares, kits, and services in support of the deliverables may be identified and procured via the Task Authorization process.

Work Arisings and Task Authorizations may be negotiated and authorized at any time during the Period of the Contract.

For satisfactory performance of authorized work, as specified in each individual Task Authorization, payment shall be made in accordance with the Contractor's most recently approved rates. Rates inclusive of profit shall be provided to the Contracting Authority. Rates shall be certified by the Contractor to be accurate, and may be verified as required. Other forms of price certification may also be required.

SCHEDULE B

DELIVERIES AND MILESTONES

The Bidder must identify in the table in Article 1 below the Delivery Date for each delivery.
While delivery is requested by March 31, 2018, the delivery must be made within the number of days identified below after an order has been made. For the purposes of the Required Goods (Schedule A - Items #1 to #6), the date of the order is deemed to be Contract Award.

1. Deliveries

All deliveries must be received DDP by the Delivery Date identified in the table above

Item #[1]	Item Description[1]	Destination[2]	QTY	Delivery Date[3] (calendar days)
1	Curtain Boom	Richmond, BC	2	
1	Curtain Boom	Victoria, BC	36	
1	Curtain Boom	Mount Pearl, NL	16	
1	Curtain Boom	Dartmouth, NS	13	
2	Curtain Boom Accessory Package	Richmond, BC	2	
2	Curtain Boom Accessory Package	Victoria, BC	36	
2	Curtain Boom Accessory Package	Mount Pearl, NL	16	
2	Curtain Boom Accessory Package	Dartmouth, NS	13	
3	Storage Container (Type 1D) with Curtain Boom	Richmond, BC	1	
4	Technical Maintenance Training	Richmond, BC	1	
4	Technical Maintenance Training	Victoria, BC	1	
4	Technical Maintenance Training	Mount Pearl, NL	1	
4	Technical Maintenance Training	Dartmouth, NS	1	
5	Operational Training	Richmond, BC	1	
5	Operational Training	Victoria, BC	1	
5	Operational Training	Mount Pearl, NL	1	
5	Operational Training	Dartmouth, NS	1	
6	Documentation	As per Annex A	As per Annex A	As per Annex A

Notes:
[1]: Refer to Schedule A for more item details.
[2]: Destination addresses will be provided upon contract award in Section 3 below.
Additional Canadian delivery destinations may be included if and when any options are exercised.
[3]: Complete delivery must occur within the specified number of calendar days from the date of the order.

2. Schedule of Milestones for Documentation (Item #6 - Documentation in Schedule A)

Milestone #	Milestone Description[4]	Milestone Payment Claim Value[5]
1	Project Management Plan DID-PM-01 First draft submission	1%
2	Project Management Plan DID-PM-01 Final submission	4%
3	Test Plan DID-SE-01 First draft submission	1%
4	Test Plan DID-SE-01 Final submission	4%
5	Commissioning Plan DID-SE-03 First draft submission	1%
6	Commissioning Plan DID-SE-03 Final submission	4%
7	Training Plan DID-TR-01 First draft submission	1%
8	Training Plan DID-TR-01 Final submission	4%
9	Instructor Manual DID-TR-02 First draft submission	1%
10	Instructor Manual DID-TR-02 Final submission	7%
11	Recommended Spare Parts Lists DID-ILS-01 Final submission	4%
12	Special Tools and Test Equipment List DID-ILS-02 Final submission	4%
13	Technical Maintenance Manual DID-ILS-03 First draft submission	1%

Milestone #	Milestone Description[4]	Milestone Payment Claim Value[5]
14	Technical Maintenance Manual DID-ILS-03 Final submission	7%
15	Operations Manual DID-ILS-04 First draft submission	1%
16	Operations Manual DID-ILS-04 Final submission	7%
17	Equipment Instructions Illustration DID-ILS-05 Final submission	7%
18	As-Assembled Drawing Package DID-ILS-06 Final submission	7%
19	All other documentation Claimable upon the Contractor fulfilling the following objectives: (a) Delivering all required goods and services including the final submissions of all documentation; and (b) The completion of initial contract period.	33%

Notes:

[4]: A brief description of the item that must delivered in accordance with the Contract including all Annexes and Appendices in order to achieve the Milestone.

[5]: Milestone Payment Claim Value is the maximum percentage of the Unit Price of Item #6 (Documentation) in Schedule A that the Contractor can submit a claim in accordance with the Contract upon achieving the Milestone.

3. Delivery Destination Addresses

< inserted at contract award >

4. Delivery Date Changes

Delivery date is an essential part of this contract. Except for a claim of excusable delay pursuant to Article 11 (Excusable delay) of the General Conditions 2030, any changes to the delivery date(s) specified in the Contract will prejudice Canada and will, at Canada's discretion, result in any or all of the following:

a. Contract Termination in accordance with Article 31 (Default by the Contractor), and the Contractor will be liable to Canada for all losses and damages suffered by Canada because of the default or occurrence upon which the notice was based, including any increase in the cost incurred by Canada in procuring the Work from another source;

b. Consideration for Contract Amendment: Delivery date(s) will not be extended without consideration being provided by the Contractor in the form of adjustment to the price, warranty, and/or goods and services provided; and

c. The execution of any applicable actions outlined in vendor performance policies established by Canada.

Annex A
Statement of Work

Environmental Response Equipment Modernization/ Mobile Incident Command Equipment Project

Boom – Curtain – Round Floatation Boom 24”

Table of Contents

Table of Contents

Section 1 INTRODUCTION

1.1 BACKGROUND

The Canadian Coast Guard (CCG) is the lead federal agency responsible for ensuring the clean-up of all ship-source and mystery-source pollution spills into waters under Canadian jurisdiction. In fulfillment of this legislated mandate, the CCG maintains a level of operational preparedness capacity to monitor, investigate and respond (when required) to all reports of marine pollution incidents. The objective of the Environmental Response Equipment Modernization / Mobile Incident Command Equipment (EREM/MICE) Project (hereinafter referred to as the "Project") is to modernize CCG's initial response equipment inventory and the supporting infrastructure required to use it. Such procurement is required to ensure CCG's response capacity is maintained as dictated by legislative mandate.

1.2 PURPOSE

A Boom – Curtain – Round Floatation Boom 24" (hereinafter referred to as only 'Curtain Boom') is a temporary floating barrier to contain a pollution spill. The CCG regularly uses curtain booms to reduce the possibility of polluting shorelines and other resources, in addition to facilitating recovery efforts.

The purpose of this Statement of Work (SOW) is to describe the Work required for the provision of each of the following deliverables:

- ***Curtain boom;***
- ***Curtain boom accessory package; and***
- ***Storage container.***

1.3 SCOPE

This SOW establishes the overall requirements for the construction, outfitting, commissioning, documentation, and support of the curtain boom, curtain boom accessory package, and the storage container. Functional requirements and technical specifications are found in the accompanying Technical Statement of Requirements (TSOR) - Annex B.

Section 2 PROJECT MANAGEMENT

2.1 GENERAL

The Contractor must employ a formal organization of project management principles akin to those defined in the Project Management Institute's Project Management Body of Knowledge (PMBOK). These principles must include the methods and procedures to direct, coordinate, and control all efforts needed to deliver the identified deliverables and realize the obligations specified in the Contract.

2.2 PROJECT MANAGEMENT

The Contractor must identify a Project Manager to oversee all work needed to satisfy contractual requirements in terms of tasks, specifications, schedules, and quality. The Project Manager must be the main point of contact with Canada.

The Contractor must prepare, deliver, and maintain all project deliverables in accordance with:

a. Appendix 1**:** Contract Data Requirements List (CDRL);

b. Appendix 2: Data Item Descriptions (DIDs); and

c. Annex B: Technical Statement of Requirements (TSOR).

2.3 PROJECT MANAGEMENT PLAN

The Contractor must provide a Project Management Plan (PMP) in accordance with **CDRL item DID-PM-01,** and submit it to the Project Authority (PA), Technical Authority (TA), and Contracting Authority (CA) for review, revision, and ultimate rejection or acceptance.

The Contractor must manage the project in accordance with the PMP, as accepted by Canada.

2.4 PROJECT REVIEW AND CONTROL

The Contractor must convene and co-chair all meetings required by this SOW at the Contractor's own facilities unless otherwise agreed to by Canada, or otherwise noted herein. Teleconference/video may be acceptable. The Contractor must provide Canada with an agenda for each meeting three business days before it is set to occur as per **CDRL item DID-PM-03**, as well as provide a Record of Decisions on the first business day after it has occurred, as per **CDRL item DID-PM-04**. Canada reserves the right to review, revise, and ultimately reject or accept agendas and Record of Decisions provided by the Contractor.

2.4.1 Contract Kick-Off Meeting

The Contractor must convene and co-chair a Contract Kick-off Meeting within 14 business days of Contract award to review the following documents (at a minimum):

a) Contract;

b) Quality management system documentation; and

c) Equipment Requirements.

The Contractor must also provide representatives of Canada with a tour of all facilities that will be used in the fabrication of the curtain boom. The tour will take place the business day following the Kick-Off Meeting and involve the same participants. At a minimum, the PA, TA, and CA will be in attendance.

2.4.2 Project Review Meetings

The Contractor must convene and co-chair a Progress Review Meeting within 28 business days of the Kick-off Meeting to review the following documents (at a minimum):

a) PMP;

b) Test Plan;

c) Commissioning Plan; and

d) Training Plan.

The Contractor must also schedule regular meetings thereafter to continue to review project progress with Canada. At a minimum, regular Project Review Meetings will occur on a monthly basis, unless otherwise specified by Canada, most often by teleconference (to be confirmed).

2.4.3 Cancellation of Meetings

Canada may cancel meetings at its discretion. Rescheduling of meetings must be done only with the explicit agreement of the PA and CA.

2.4.4 Unscheduled Meetings

The Contractor must provide representation at meetings (teleconference or in person) should the need for ad hoc or unscheduled meetings be required.

2.4.5 Problem Reporting and Design Changes

The Contractor must advise Canada by email within two calendar days upon identifying a problem or issue that may impact the Contract work. Canada will advise whether an unscheduled meeting or other action is required.

Section 3 SYSTEM ENGINEERING MANAGEMENT

3.1 TESTING

The Contractor must demonstrate that each deliverable satisfies the requirements defined in the accompanying TSOR. Such demonstration of requirements must be conducted through the tests defined hereafter. At a minimum, these tests will confirm to the TA that each component, piece of equipment, sub-system, system, and the curtain boom (as a whole) can be operated to its full capacity while under operating conditions.

Testing must be conducted at the Contractor's facility. Canada must be notified no less than two weeks prior to conducting testing.

3.1.1 Test Plan

The Contractor must develop an overall Project Test Plan as per **CDRL item DID-SE-01**, which details the schedule and all tests, including First Article Testing.

3.1.1.1 Certifications and Material Sheets

At a minimum, the contractor must provide certifications which must be appended to the Test Report (3.1.2) as per **CDRL item DID-SE-02** for the following certifications and materials listed to prove that they will meet requirements as defined in the TSOR:

a. Mechanical Performance of the curtain boom fabric (as per TSOR Section 3.3.7.2);

b. Cure date or initial storage period of the curtain boom fabric (as per TSOR Section 3.3.8.2);

c. Tensile strength (at a minimum) of the webbing top tension member (as per TSOR Section 3.3.7.3);

d. Grade 30 designation for all supplied chain (as per TSOR Section 3.3.7.4); and

e. Total tensile strength of a curtain boom section (as per TSOR Section 3.3.7.5).

3.1.2 Test Report

The Contractor must produce a Test Report as per **CDRL item DID-SE-02** after the completion of each test listed in the Test Plan**.** The report must summarize the results of the test including any outstanding issues and discrepancies resulting from the testing, how the Contractor intends to rectify them, and the associated timeline for resolution. The Test Reports must be certified by the Contractor as an accurate record of the test results. Test

results must be approved by the TA prior to the Contractor shipping the equipment to Canada's facilities.

3.2 QUALITY ASSURANCE

The Contractor must implement a quality management system that complies with the requirements of: ISO 9001:2008 or ISO 9001:2015 - Quality management systems - Requirements, published by the International Organization for Standardization (ISO). Only exclusions in accordance with clause 1.2 of ISO 9001 are acceptable.

3.3 COMMISSIONING

3.3.1 General

Commissioning is a comprehensive and systematic process to verify that all deliverables (once delivered to its final destination) are complete in all respects and perform in the working environment in accordance with Canada's requirements. All deliverables and respective units must be commissioned by the Contractor to place the equipment into working condition, ready for active service and operation. The Contractor must produce a Commissioning Plan as per **CDRL item DID-SE-03** and submit it to Canada for review and approval.

3.3.2 Commissioning Procedure

Canada will ensure operational personnel and/or Subject Matter Experts (SMEs) are present to observe the Contractor's work during the commissioning process. The Contractor must furnish all necessary materials required to place equipment in working condition ready for active service and operation. The Contractor may request the use of CCG vessels and personnel in order to complete the commissioning process in accordance with the Contract. The Contractor will ensure that all deliverables are left in an operationally ready state upon completion of commissioning (i.e., no further set-up or configuration is necessary; the equipment can be deployed as-is for operation).

3.3.3 Commissioning Report

The Contractor must produce a Commissioning Report as per **CDRL item DID-SE-04** for each equipment delivery.

Section 4 TRAINING

4.1 GENERAL

The Contractor must provide two different types of training sessions:

a) Technical Maintenance Training; and

b) Operational Training.

One Technical Maintenance Training session, and one Operational Training session must be delivered with each delivery of curtain boom.

All training materials must be in both Canadian English and Canadian French. Training sessions must be conducted in either English or French, and will be determined by Canada prior to booking the training event.

4.1.1 Training Plan

A Training Plan in accordance with **CDRL item DID-TR-01** must be submitted to Canada for review and approval.

4.2 TECHNICAL MAINTENANCE TRAINING

4.2.1 General

The objective of the Technical Maintenance Training Session is for the Contractor to give the participants detailed knowledge of the system structure and its equipment, manner of operation, and limitations to allow for the proper care and maintenance of the deliverables. Canada expects the Technical Maintenance Training Session to last one full workday.

4.2.2 Class Size and Students

The Technical Maintenance Training Session will be attended by CCG Integrated Technical Services personnel. It is anticipated that each group will have 6 to 10 students.

4.2.3 Scheduling and Duration

The Technical Maintenance Training Session must be scheduled for normal business hours on the first business day following commissioning of curtain boom at each delivery location, unless otherwise specified by Canada.

4.3 OPERATIONAL TRAINING

4.3.1 General

The objective of the Operational Training Session is for the Contractor to give the participants a working knowledge of the deliverables such as to allow for safe operation in normal vendor

conditions. Canada expects the Operational Training Session to take a full workday.

4.3.2 Class Size and Students

The Operational Training Session will be attended by CCG Operational Personnel. It is anticipated that each group will have 6 to 10 students.

4.3.3 Scheduling and Duration

The Operational Training Session must be scheduled for normal business hours on the first business day following the Technical Maintenance Training Session at the delivery location, unless otherwise specified by Canada.

4.4 TRAIN-THE-TRAINER

The Contractor must provide Canada with an Instructor Manual as per **CDRL item DID-TR-02** for review and approval by Canada. The Instructor Manual must be written so as to enable participants of the training sessions to administer the Technical Maintenance Training and Operational Training in the future without additional Contractor support. The Contractor must also provide Canada with soft copies of all video training aids as specified in **DID-TR-02**.

Section 5 INTEGRATED LOGISTIC SUPPORT (ILS)

5.1 GENERAL

The Contractor must conduct logistic support planning as detailed herein, with the objective of minimizing the life cycle cost of the deliverables.

5.2 SPARES, SPECIAL TOOLS AND TEST EQUIPMENT

The Contractor must provide a Recommended Spare Parts List (RSPL) as per **CDRL item DID-ILS-01.** The RSPL must be in accordance with the accompanying TSOR and in accordance with the requirements identified in the maintenance plan (Section 5.3), rationalized to indicate recommended quantities. The RSPL must identify all spare parts and repair parts that that will be required for the maintenance (preventive and corrective) of the deliverables for a two year period.

The RSPL must include known critical spares that, if they were to fail, would have serious consequences to the operation and performance of the system such that Canada's ability to respond to an incident would be compromised. Critical spares must be identified as such.

The Contractor must also provide a Special Tools and Test Equipment (STTE) List as per **CDRL item DID-ILS-02** in accordance with requirements identified in the maintenance plan (Section 5.3), rationalized to indicate recommended quantities. The STTE List must identify an emergency repair kit with all parts and tools required to repair the curtain boom in the event of puncture or damage to the fabric. Repairs made to the fabric must return the curtain boom to its original, fully operational capacity.

5.2.1 Provisioning of Spares, Repair Parts, Special Tools and Test Equipment

Canada may, at its discretion, exercise the option(s) for the provision of some or all of the spares, repair parts, special tools, and/or test equipment identified in the RSPL and in the STTE List.

Spare parts for specific equipment or assemblies must be kitted, separately packaged, and identified accordingly. All spares, repair parts, special tools, and/or test equipment supplied by the Contractor must be packaged, clearly marked and identified with manufacturer's name, item name and description, and part number on an adhesive label secured to the package.

Parts must be properly preserved and packaged for long term storage, as applicable, by ensuring they are coated with an approved preservative and/or sealed in an approved wrapping or pack, as determined by the equipment or item's manufacturer.

5.3 MAINTENANCE PLAN

The Contractor must prepare and deliver a technical maintenance manual for the curtain boom and curtain boom accessory package in accordance as per **CDRL item DID-ILS-03.** The Contractor must identify preventive maintenance activities that span the anticipated service life

of all supplied and furnished equipment. A comprehensive maintenance schedule must serve as the basis of these activities.

The Contractor must address corrective maintenance activities for all critical supplied and furnished equipment. Canada reserves the right to add to or modify the list of equipment deemed critical by the Contractor.

5.3.1 Specialized Maintenance

The Contractor must identify any maintenance activities (over and above routine preventive or corrective maintenance) that should be conducted by the Contractor or a qualified third party. Such maintenance activities would warrant specialized training outside of the Technical Maintenance Training Sessions identified in Section 4.2 to address a particular technical complexity or risk.

5.4 TECHNICAL DATA INCLUDING OPERATIONS AND OEM MANUALS, DEPLOYMENT INSTRUCTIONS, AS-ASSEMBLED DRAWING PACKAGE, AND SUBCONTRACTING REPORTS

The Contractor must prepare and deliver the following:

a. **Operations Manual** for the identified deliverables in accordance as per **CDRL item DID-ILS-04**

b. **Original Equipment Manufacturer (OEM) Manuals**

   Canada requires a complete set of OEM manuals for all applicable systems and equipment comprised within the identified deliverables. The complete set of OEM manuals must include, though not limited to, the supplied storage container (refer to TSOR Section 3.5) and applied coating (refer to TSOR Section 3.6.2).

   All OEM manuals must be provided in both native file digital format without password protection using Microsoft Office, and Adobe Acrobat searchable portable document format (pdf). OEM manuals existing in hardcopy only must be scanned into digital format using Adobe Acrobat X, or later, incorporating a full search capability with book marking.

   All OEM manuals must be provided in both Canadian English and Canadian French. Where English or French are not readily available commercially, unilingual versions in either of Canada's official languages will be accepted provided the Contractor provides written evidence from the supplier that the prescribed manuals are not commercially available in the other official language.

c. **Equipment Instructions Illustration** as per **CDRL item DID-ILS-05** and **TSOR Section 3.6.3**

d. **As-Assembled Drawing Package** as per **CDRL item DID-ILS-06**

e. **Indigenous Subcontracting Report** as per **CDRL item DID-IE-01** (When applicable)

Canada requires an Indigenous Subcontracting Report for each instance where the Contractor has awarded a subcontract to a Canadian Indigenous owned business.

APPENDIX 1 CONTRACT DATA REQUIREMENTS LIST

The following section defines the various columns of information found on the Contract Data Requirements List (CDRL). The CDRL is an all-encompassing table illustrating the submission details associated with every defined Data Item Deliverable (DID). Each DID details the content and format required for each defined deliverable of the contract.

CONTRACTOR
Identifies the Contractor responsible for the delivery of the DIDs defined within the CDRL.

CONTRACT
Identifies the Contract for which the CDRL applies.

IDENTIFICATION NUMBER (ID #)
The Identification number is an alphanumeric designation to uniquely identify each individual DID. Note that the DIDs are categorized using the following designation:

Project Management is defined with 'PM';
System Engineering Management is defined with 'SE';
Training is defined with 'TR';
Integrated Logistic Support is defined with 'ILS'; and
Indigenous Engagement is defined with 'IE'.

TITLE OF DATA
Identifies the title of the DID referred to in the CDRL.

CONTRACT REFERENCE (CON. REF.)
Identifies the specific paragraph number of the Contract Demand, Statement of Work, Request for Proposal, Specification, or other applicable document to assist in identifying the work effort associated with the DID.

REQUIRING OFFICE (REQ. OFFICE)
Identifies the technical office of primary interest (OPI) responsible for defining the data requirement, reviewing, acceptance and/or approval of the data item, and ensuring the adequacy of the delivered data.

APPROVAL CODE (APP. CODE)
Identifies items of critical data requiring specific advanced written approval, such as test plans, identified by placing an 'A' in this column. These data items may require submission of a preliminary draft prior to publication of a final document. When a

preliminary draft is required, column labelled 'REMARKS' shall show the length of time for Government approval/disapproval and when the final document is to be delivered. The extent of approval requirements (e.g., approval of technical content and/or format) will also be defined in the aforementioned column. If advance approval is not required, this column is marked 'N/A'.

FREQUENCY (FREQ.)

Identifies the frequency of the delivered data. The following frequency codes are used:

ANNLY	Annually
ASGEN	As generated
ASREQ	As required
BI-MO	Every 2 months
BI-WK	Every 2 weeks
DAILY	Daily
MNTHY	Monthly
ONE/R	One time with revision
OTIME	One time
QRTLY	Quarterly
R/ASR	Revisions as required
SEMIA	Semi-Annually
WKLY	Weekly

LANGUAGE (LANG.)

Identifies the language of the delivered data. 'Bilingual' indicates the data item is to be delivered in both the official Canadian English and Canadian French.

AS-OF DATE

For data items that are submitted only once, the 'as-of' date or associated constraint is indicated. The following abbreviations are used for the constraints:

ASGEN	As generated
ASREQ	As required
DACA	Days after contract award
MACA	Months after contract award
EOM	End of Month
EOQ	End of quarter

If the as-of date is not applicable, this column is marked 'N/A'.

DATE OF FIRST SUBMISSION (DATE OF 1ST SUB.)

Indicates the initial submission date or associated constraint for the first submission of the data item using typical abbreviations as listed above under 'AS-OF DATE'.

DATE OF SUBSEQUENT SUBMISSION (DATE OF SUBSEQ. SUB.)
Indicates the date(s) of subsequent submission(s) or associated constraint(s) of the data item. The abbreviations used for the constraints are listed above under 'AS-OF DATE'. If no subsequent submission or associated constraint are required, this column is marked 'N/A'.

DISTRIBUTION AND ADDRESSES
Identifies the addresses and the respective number of 'COPIES' (hard [H] copies and soft [S] copies separately), for both the draft and original submissions (sub column '*DRAFT'* [*DR.*]), and for the final or subsequent submissions (sub column *'FINAL'*), for which the data item is required. All draft documents must be provided in soft copy format to facilitate review.
The 'ADDRESS' column indicates the recipient of each *Draft* and *Final* copies of the data item.

REMARKS
Provides additional or clarifying information with respect to the DID. Where other columns refer to 'REMARKS', then the associated column is indicated with the information, and a 'See REMARKS' note is entered in the referring column.

APPROVED BY
Identifies the name and designation of the person approving the DID.

DATE
Identifies the date of the DID approval.

CONTRACTOR:	**CONTRACT:**

ID #	**TITLE OF DATA**	**CON. REF.**	**SUBMISSION DETAILS**							**DISTRIBUTION**				**REMARKS**
			REQ. OFFICE	**APP. CODE**	**FREQ.**	**LANG.**	**AS-OF DATE**	**DATE OF 1ST SUB.**	**DATE OF SUBSEQ. SUB.**	**ADDRESS**	**COPIES**			
											DR.	**FINAL**		
												H	**S**	
Project Management														
DID-PM-01	Project Management Plan	SOW 2.3	CCG ER ITS	A	ONE/R	English	N/A	2 weeks before the first Progress Review Meeting	See REMARKS	CCG PA	1	1	1	CCG will provide comments on the Project Management Plan and return it to the Contractor for revision and resubmission. The Contractor must provide a revised copy within two weeks.
										PWGSC CA	1		1	
APPROVED BY: **DATE:**														
DID-PM-02	Meeting Agenda	SOW 2.4	CCG ER ITS	A	AS REQ	English	N/A	3 business days prior to any meeting scheduled with Canada	See REMARKS	CCG PA	1		1	CCG will review and provide comment, or accept all agendas within 2 business days
										PWGSC CA			1	
APPROVED BY: **DATE:**														

ID #	TITLE OF DATA	CON. REF.	SUBMISSION DETAILS							DISTRIBUTION				REMARKS
			REQ. OFFICE	APP. CODE	FREQ.	LANG.	AS-OF DATE	DATE OF 1ST SUB.	DATE OF SUBSEQ. SUB.	ADDRESS	COPIES			
											DR.	FINAL		
												H	S	
Project Management														
DID-PM-03	Record of Decisions	SOW 2.4	CCG ER ITS	A	ONE/R	English	N/A	3 business days after any meeting scheduled with Canada	See REMARKS	CCG TA	1		1	CCG will review and provide comment, or accept all RODs within 5 business days
										PWGSC CA			1	
APPROVED BY: **DATE:**														
System Engineering Management														
DID-SE-01	Test Plan	SOW 3.1.1	CCG ER ITS	A	One/R	English	N/A	2 weeks before the first Progress Review Meeting	See REMARKS	CCG TA	1	1	1	CCG will provide comments on the Test Plan and return it to the Contractor for revision and resubmission. The Contractor must provide a revised copy within two weeks.
										PWGSC CA	1		1	
APPROVED BY: **DATE:**														

ID #	TITLE OF DATA	CON. REF.	SUBMISSION DETAILS							DISTRIBUTION				REMARKS
			REQ. OFFICE	APP. CODE	FREQ.	LANG.	AS-OF DATE	DATE OF 1ST SUB.	DATE OF SUBSEQ. SUB.	ADDRESS	COPIES			
											DR.	FINAL		
												H	S	
System Engineering Management														
DID-SE-02	Test Report	SOW 3.1.2	CCG ER ITS	N/A	ASREQ	English	N/A	ASREQ	See REMARKS	CCG TA	N/A	1	1	Test reports must be submitted within 7 calendar days of completion of each test. In case of test failure subsequent reports must be submitted within 7 calendar days of re-testing.
										PWGSC CA	N/A		1	
APPROVED BY: **DATE:**														
DID-SE-03	Commissioning Plan	SOW 3.3.1 and SOW 3.3.2	CCG ER ITS	A	ONE/R	English	N/A	2 weeks before first Progress Review Meeting	See REMARKS	CCG PA	1	1	1	CCG will provide comments on the Commissioning Plan and return it to the Contractor for revision and resubmission. The Contractor must provide a revised copy within two weeks.
										PWGSC CA	1		1	
APPROVED BY: **DATE:**														

ID #	TITLE OF DATA	CON. REF.	SUBMISSION DETAILS							DISTRIBUTION				REMARKS
			REQ. OFFICE	APP. CODE	FREQ.	LANG.	AS-OF DATE	DATE OF 1ST SUB.	DATE OF SUBSEQ. SUB.	ADDRESS	COPIES			
											DR.	FINAL		
												H	S	
System Engineering Management														
DID-SE-04	Commissioning Report	SOW 3.3.3	CCG ER ITS	N/A	ASREQ	English	N/A	ASREQ	See REMARKS	CCG PA	N/A	1	1	Commissioning reports are required after each delivery has been commissioned and must be submitted 7 calendar days after completion of the commissioning.
										PWGSC CA	N/A		1	
APPROVED BY: **DATE:**														
Training														
DID-TR-01	Training Plan	SOW 4.1.1	CCG ER ITS	A	ONE/R	English	N/A	2 weeks before first Progress Review Meeting	See REMARKS	CCG PA	1	1	1	CCG will provide comments on the Training Plan and return it to the Contractor for revision and resubmission. The Contractor must provide a revised copy within two weeks.
										PWGSC CA	1		1	
APPROVED BY: **DATE:**														

ID #	TITLE OF DATA	CON. REF.	SUBMISSION DETAILS							DISTRIBUTION				REMARKS
			REQ. OFFICE	APP. CODE	FREQ.	LANG.	AS-OF DATE	DATE OF 1ST SUB.	DATE OF SUBSEQ. SUB.	ADDRESS	COPIES			
											DR.	FINAL		
												H	S	
Training														
DID-TR-02	Instructor Manual	SOW 4.4	CCG ER ITS	A	ONE/R	Bilingual	N/A	3 MACA	See REMARKS	CCG PA	1	1	1	CCG will provide comments on the Instructor Manual and return it to the Contractor for revision and resubmission. The Contractor must provide a revised copy within two weeks.
										PWGSC CA	1		1	
APPRVOED BY: **DATE:**														
Integrated Logistic Support														
DID-ILS-01	Recommended Spare Parts List	SOW 5.2	CCG ER ITS	A	ONE/R	English	N/A	3 MACA	See REMARKS	CCG TA	1	1	1	CCG will provide comments on the Complete Spare Parts List and return it to the Contractor for revision and resubmission. The Contractor must provide a revised copy within two weeks.
										PWGSC CA	1		1	
APPRVOED BY: **DATE:**														

ID #	TITLE OF DATA	CON. REF.	SUBMISSION DETAILS							DISTRIBUTION				REMARKS
			REQ. OFFICE	APP. CODE	FREQ.	LANG.	AS-OF DATE	DATE OF 1ST SUB.	DATE OF SUBSEQ. SUB.	ADDRESS	COPIES DR.	FINAL H	FINAL S	
Integrated Logistic Support														
DID-ILS-02	Special Tools and Test Equipment List	SOW 5.2	CCG ER ITS	A	ONE/R	Bilingual	N/A	3 MACA	See REMARKS	CCG TA	1	1	1	CCG will provide comments on the Special Tools and Test Equipment List and return it to the Contractor for revision and resubmission. The Contractor must provide a revised copy within two weeks.
										PWGSC CA	1		1	
APPROVED BY: **DATE:**														
DID-ILS-03	Technical Maintenance Manual	SOW 5.3	CCG ER ITS	A	ONE/R	Bilingual	N/A	3 MACA	See REMARKS	CCG TA	1	1	1	CCG will provide comments on the Technical Maintenance Manual and return it to the Contractor for revision and resubmission. The Contractor must provide a revised copy within two weeks.
										PWGSC CA	1		1	
APPROVED BY: **DATE:**														

ID #	TITLE OF DATA	CON. REF.	SUBMISSION DETAILS							DISTRIBUTION				REMARKS
			REQ. OFFICE	APP. CODE	FREQ.	LANG.	AS-OF DATE	DATE OF 1ST SUB.	DATE OF SUBSEQ. SUB.	ADDRESS	COPIES			
											DR.	FINAL		
												H	S	
Integrated Logistic Support														
DID-ILS-04	Operations Manual	SOW 5.4	CCG ER ITS	A	ONE/R	Bilingual	N/A	3 MACA	See REMARKS	CCG TA	1	1	1	CCG will provide comments on the Operations Manual and return it to the Contractor for revision and resubmission. The Contractor must provide a revised copy within two weeks.
										PWGSC CA	1		1	
APPROVED BY: **DATE:**														
DID-ILS-05	Equipment Instructions Illustration	SOW 5.4, TSOR 3.15.6	CCG ER ITS	A	ONE/R	Bilingual	N/A	3 MACA	See REMARKS	CCG TA	1	1	1	CCG will provide comments on the Equipment Instructions Illustration and return it to the Contractor for revision and resubmission. The Contractor must provide a revised copy within two weeks.
										PWGSC CA	1		1	
APPROVED BY: **DATE:**														

ID #	TITLE OF DATA	CON. REF.	SUBMISSION DETAILS							DISTRIBUTION				REMARKS
			REQ. OFFICE	APP. CODE	FREQ.	LANG.	AS-OF DATE	DATE OF 1ST SUB.	DATE OF SUBSEQ. SUB.	ADDRESS	COPIES			
											DR.	FINAL		
												H	S	
Integrated Logistic Support														
DID-ILS-06	As-Assembled Drawing Package	SOW 5.4	CCG ER ITS	A	ONE/R	Bilingual	N/A	2 weeks before the first Progress Review Meeting	See REMARKS	CCG TA	1	1	1	CCG will provide comments on the As-Assembled Drawing Package and return it to the Contractor for revision and resubmission. The Contractor must provide a revised copy within two weeks.
										PWGSC CA	1		1	
APPROVED BY: **DATE:**														
DID-IE-01	Indigenous Subcontracting Report	SOW 5.4	CCG ER ITS	N/A	ASREQ	English	N/A	ASREQ	See REMARKS	CCG TA	N/A	1	1	CLCA Engagement reports are required for each delivery where work is subcontracted to indigenous businesses and are to be provided to Canada within 7 business days of delivery as per SOW section 5.4
										PWGSC CA	1		1	
APPROVED BY: **DATE:**														

APPENDIX 2 DATA ITEM DESCRIPTIONS

DATA ITEM DESCRIPTION	
1. TITLE **Project Management Plan**	**2. IDENTIFICATION NUMBER** **DID-PM-01**

3. DESCRIPTION

The Project Management Plan (PMP) details the project management practices and procedures that the Contractor will follow in order to meet the objectives of the project. It must detail the procedures for project planning, organizing, directing, monitoring, controlling, providing for the orderly resource management of and reporting on all work with respect to the project. The PMP is used to provide the Canada insight into the Contractor's project management practices and procedures as they apply to the accomplishment of the Work under the Contract.

4. Application

This DID contains the format, content, and preparation instructions for the PMP as required by the Statement of Work (SOW), Section 2.3.

5. Data Preparation Instructions

5.1 Source Document

5.1.1 The applicable issue of the documents cited herein, including their approval dates and dates of any applicable amendment notices and revisions must be as specified in the Contract.

5.2 Format

5.2.1 The document may be in the Contractor's format, and must be printable on 8.5x11 size paper, and as further described herein. Soft copies must be provided in a format compatible with Microsoft Office 2010.

5.3 Content

5.3.1 The PMP must, as a minimum, contain the following information:

5.3.1.1 **Introduction**

This section must identify the purpose and scope of the PMP. References and terminology used in the plan must be clearly identified and a Master Schedule must be included.

5.3.1.2 **Project Overview**

This section must clearly identify the project objectives and project deliverables.

5.3.1.3 **Project Organization**

The PMP must identify by name all key management personnel and clearly indicate lines of responsibility, including the person who will have overall responsibility for the project. An organization chart must be provided stating the roles and responsibilities of all personnel, including subcontractors. Personnel who will interface directly with PWGSC and CCG must be identified and their scope of responsibility and authority stated.

5.3.1.4 **Work Plan**

This section must identify and quantify the work to be done by the Contractor in order to build and deliver the system. Detailed task descriptions must be provided, along with resource requirements. A proposed Master Schedule must be provided detailing milestones, tasks, and resource allocations. The Master Schedule represents a summary-level project schedule the purpose of which is to identify all of the major deliverables for the project as well as all individual work breakdown structure components.

5.3.1.5 **Risk Management**

The PMP must identify the Contractor's risk management policy. Risk management responsibilities must be identified and a detailed risk management process submitted including a risk mitigation plan. A risk mitigation matrix must be provided detailing management, technical, schedule, and logistic support risks. Issue management process must be identified detailing the escalation process, and problem reporting communication.

Change Management Plan

5.3.1.6 The PMP must identify the Contractor's change management plan. Change management responsibilities must be identified and the process for managing change and problem reporting must be defined. The Change Management Plan must demonstrate specific methods for documenting change issues (i.e. a controlled, numbered template), and subsequent means for seeking approvals and record keeping.

Communications Plan

5.3.1.7

The PMP must identify the Contractor's Communications Plan. A plan identifying the processes for communications with Canada, and defining the format and regularity of correspondence must be provided.

DATA ITEM DESCRIPTION	
1. TITLE **Meeting Agenda**	**2. IDENTIFICATION NUMBER** **DID-PM-02**

3. DESCRIPTION

The Project Review Agenda describes what the Contractor must provide Canada with for each meeting to be submitted at least three business days prior to the scheduled meeting.

4. Application

This DID contains the format and contents for the agenda as required by the Statement of Work (SOW), Section 2.4.

5. Agenda Preparation Instructions

5.1 Source Document

5.1.1 The applicable issue of the documents cited herein, including their approval dates and dates of any applicable amendment notices and revisions must be as specified in the Contract.

5.2 Format

5.2.1 The document may be in the Contractor's format, and must printable on 8.5x11 size paper and as further described herein. Soft copies must be provided in a format compatible with Microsoft Office 2010.

5.3 Content

5.3.1 At a minimum, the following information must be included:

Identification

This section will provide the report title, Contractor identification and contact information, date, and a list of attendees.

Status

The Contractor must provide up-to-date general descriptions and concerns regarding the project, including but not limited to the following contents:

- Current status;
- Project changes;
- Deliverables;
- Dates and deadlines; and,
- Action items and next steps.

DATA ITEM DESCRIPTION	
1. TITLE **Record of Decisions**	**2. IDENTIFICATION NUMBER** **DID-PM-03**
3. DESCRIPTION The Record of Decisions (ROD) describes Contractor and Canada's decisions resulting from Project Review Meetings as per SOW Section 2.4. The ROD is to be submitted by the Contractor to Canada no more than three business days following each meeting.	
4. Application This DID contains the format, content, and content for the ROD as required by the Statement of Work (SOW), Section 2.4.	
5. Agenda Preparation Instructions **5.1 Source Document** 5.1.1 The applicable issue of the documents cited herein, including their approval dates and dates of any applicable amendment notices and revisions must be as specified in the Contract. **5.2 Format** 5.2.1 The document may be in the Contractor's format, and must printable on 8.5x11 size paper, and as further described herein. Soft copies must be provided in a format compatible with Microsoft Office 2010. **5.3 Content** 5.3.1 At a minimum, the following information must be included: *Identification* This section will provide the report title, Contractor identification, date, contact information for Contractor and a list of attendees who attended the meeting the ROD is addressing. *Minutes taken* Documented time, date, location, attendee specific actions, topics discussed, description of formal outcomes *Action items* Next steps and actions to be taken and by whom	

DATA ITEM DESCRIPTION	
1. TITLE **Test Plan**	**2. IDENTIFICATION NUMBER** **DID-SE-01**

3. DESCRIPTION

The Test Plan details the test procedures that the Contractor will follow in order to complete the testing described by the SOW. The Test Plan is used to provide Canada insight into the Contractor's project management practices and procedures as they apply to the completion of the testing requirements of the Contract.

4. Application

This DID contains the format, content, and preparation instructions for the test plan as required by the Statement of Work (SOW), Section 3.1.1.

5. Data Preparation Instructions

5.1 Source Document

5.1.1 The applicable issue of the documents cited herein, including their approval dates and dates of any applicable amendment notices and revisions must be as specified in the Contract.

5.2 Format

5.2.1 The document may be in the Contractor's format, and must be printable on 8.5x11 size paper, and as further described herein. Soft copies must be provided in a format compatible with Microsoft Office 2010.

5.3 Content

5.3.1 At a minimum, the following information must be included:

a. Introduction

This section will broadly outline the purpose and objectives of the testing to be performed (including first article testing), relevant terminology, and references.

b. Test Schedule

Including reference to Master Project Schedule included as part of the Project Management Plan

c. Test Procedures

Including methods, safety precautions, parameters to be measured, pass/fail criteria, and procedure in case of test interruptions

d. Test Conditions

Including location, test equipment, calibration, operator input, and expected results

e. Recording and reporting

Including data collection and analysis techniques

DATA ITEM DESCRIPTION	
1. TITLE **Test Report**	**2. IDENTIFICATION NUMBER** **DID-SE-02**

3. DESCRIPTION

The Test Report details the results of a single test and illustrates to Canada the product's adherence to the standards outlined in the Test Plan.

4. Application

This DID contains the format, content, and preparation instructions for the test report as required by the Statement of Work (SOW), Section 3.1.2.

5. Data Preparation Instructions

5.1 Source Document

5.1.1 The applicable issue of the documents cited herein, including their approval dates and dates of any applicable amendment notices and revisions must be as specified in the Contract.

5.2 Format

5.2.1 The document may be in the Contractor's format, and must printable on 8.5x11 size paper, and as further described herein. Soft copies must be provided in a format compatible with Microsoft Office 2010.

5.3 Content

5.3.1 At a minimum, the following information must be included:

a. Test Personnel

Identify, by name (must be in print and signatory) and position, all personnel involved in the conduct, supervision, and witnessing of the test. All signatory must be dated.

b. Item Under Test

Identify, by serial number, the asset/item tested and its configuration at the time of test

c. Problems Encountered

Identify any problems encountered and actions taken. Details for any missed steps, defects or deficiencies discovered during the conduct of the test or trial, along with the actions the Contractor proposes to rectify those deficiencies.

d. Test Results

Detail all of the test data and summarize the data reduction analysis. Reference can be made to attached annexes. Results obtained from the test(s) must be submitted with a statement of the required results being achieved.

e. Conclusions

Identify the result and provide a brief analysis of the test results in narrative form

f. Certifications and Material Sheets

Include all appropriate certifications required as per SOW 3.1.1.1. Reference can be made to attached annexes.

DATA ITEM DESCRIPTION	
1. TITLE **Commissioning Plan**	**2. IDENTIFICATION NUMBER** **DID-SE-03**

3. DESCRIPTION

The Commissioning Plan details the commissioning procedures that the Contractor will follow in order to complete the commissioning process described by the SOW. The Commissioning Plan is used to provide Canada insight into the Contractor's project management practices and procedures as they apply to the completion of the commissioning requirements of the Contract.

4. Application

This DID contains the format, content, and preparation instructions for the Commissioning Plan as required by the Statement of Work (SOW), Section 3.3.1 and 3.3.2.

5. Data Preparation Instructions

5.1 Source Document

5.1.1 The applicable issue of the documents cited herein, including their approval dates and dates of any applicable amendment notices and revisions must be as specified in the Contract.

5.2 Format

5.2.1 The document may be in the Contractor's format, and must be printable on 8.5x11 size paper, and as further described herein. Soft copies must be provided in a format compatible with Microsoft Office 2010.

5.3 Content

5.3.1 At a minimum, the following information must be included:

a. Commissioning Schedule

b. Commissioning Personnel

c. Commissioning Procedures

i) Pass/fail criteria

ii) Replacement schedule in the event Canada does not accept the item

d. Commissioning Objectives, including but not limited to:

i) Verification of the delivery of a complete system

ii) Verification that the unpacking and setup of the system has taken place in accordance with manufacturer recommendations

iii) Verification and documentation of the system performance

DATA ITEM DESCRIPTION	
1. TITLE **Commissioning Report**	**2. IDENTIFICATION NUMBER** **DID-SE-04**
3. DESCRIPTION The Commissioning Report details the results of the Commissioning of a given delivery and illustrates to CCG the product's adherence to the standards outlined in the Commissioning Plan.	
4. Application This DID contains the format, content, and preparation instructions for the Commissioning Report as required by the Statement of Work (SOW), Section 3.3.3	
5. Data Preparation Instructions **5.1 Source Document** 5.1.1 The applicable issue of the documents cited herein, including their approval dates and dates of any applicable amendment notices and revisions must be as specified in the Contract. **5.2 Format** 5.2.1 The document may be in the Contractor's format, and must be printable on 8.5x11 size paper, and as further described herein. Soft copies must be provided in a format compatible with Microsoft Office 2010. **5.3 Content** 5.3.1 At a minimum, the following information must be included: **a. Commissioning Personnel** Identify, by name and position, all personnel involved in the conduct and supervision of the commissioning **b. Item Being Commissioned** Identify, by serial number, the asset/item tested and its configuration at the time of commissioning **c. Problems Encountered** Including problems identified and action taken State pass/fail status of the item **d. Conclusions** Identify the result of the commissioning and provide a brief analysis in narrative form State pass/fail status of the item	

DATA ITEM DESCRIPTION	
1. TITLE **Training Plan**	**2. IDENTIFICATION NUMBER** **DID-TR-01**
3. DESCRIPTION The Training Plan must describe the content of the Operational and Technical Maintenance sessions as well as the training materials required to administer them. The Training Plan is used to provide Canada insight into the Contractor's training methods.	
4. Application This DID contains the format, content, and preparation instructions for the Training Plan as required by the Statement of Work (SOW), Section 4.1.1.	
5. Data Preparation Instructions **5.1 Source Document** 5.1.1 The applicable issue of the documents cited herein, including their approval dates and dates of any applicable amendment notices and revisions must be as specified in the Contract. **5.2 Format** 5.2.1 The document may be in the Contractor's format, and must be printable on 8.5x11 size paper, and as further described herein. Soft copies must be provided in a format compatible with Microsoft Office 2010. **5.3 Content** 5.3.1 At a minimum, the following information must be included: a. Training session objectives and performance objectives for participants b. Proposed training session schedule c. A list and description of required training equipment 5.3.2 At a minimum, the Technical Maintenance training session must include: a. Fault locating and diagnostic techniques b. Preventive and Corrective maintenance procedures 5.3.3 At a minimum, the Operational training session must include a. The purpose, functions and capabilities of each of the components of the system b. Identification of all safety checks required prior to normal operation c. Demonstrations of how to correctly operate all components of the system (deployed in the field, operated, recovered, decontamination, stored) d. The safe operational limitations of the deliverables	

DATA ITEM DESCRIPTION	
1. TITLE **Instructor Manual**	**2. IDENTIFICATION NUMBER** **DID-TR-02**

3. DESCRIPTION

The Instructor Manual must provide sufficient details to allow the trainer to instruct end users on the safe technical maintenance and operation of the equipment.

4. Application

This DID contains the format, content, and preparation instructions for the Instructor Manual as required by the Statement of Work (SOW), Section 4.4

5. Data Preparation Instructions

5.1 Source Document

5.1.1 The applicable issue of the documents cited herein, including their approval dates and dates of any applicable amendment notices and revisions shall be as specified in the Contract.

5.2 Format

5.2.1 The document may be in the Contractor's format, and must be printable on 8.5x11 size paper, and as further described herein. Soft copies must be provided in a format compatible with Microsoft Office 2010. The document must be provided in English and Canadian French languages. Any video training aids must be provided in MP4 format on a CD/DVD.

5.3 Content

5.3.1 At a minimum, the following information must be included:

a. Training session objectives and performance objectives for participants;

b. Proposed training session schedule;
c. A list of topics to be covered;
d. Directions on how material is to be delivered;
e. A list and description of required training equipment;

f. Suggested training techniques to enhance participant understanding of the system; and

g. Suggested self-evaluation techniques to improve the Trainer's ability to instruct users

DATA ITEM DESCRIPTION	
1. TITLE **Recommended Spare Parts Lists**	**2. IDENTIFICATION NUMBER** **DID-ILS-01**

3. DESCRIPTION

The Recommended Spare Parts Lists (RSPL) provides recommendations and other information required to assist Canada in decisions regarding the conceivable procurement of spare parts. This list is integral to planning the maintenance (preventive, and corrective repair) and support for the deliverables.

4. Application

This DID contains the format, content, and preparation instructions for the RSPL as required by the Statement of Work (SOW), Section 5.2.

5. Data Preparation Instructions

5.1 Source Document

5.1.1 The applicable issue of the documents cited herein, including their approval dates and dates of any applicable amendment notices and revisions must be as specified in the Contract.

5.2 Format

5.2.1 The RSPL data must be provided in a Microsoft Excel 2010 spreadsheet, unless otherwise specified by Canada, including the following:

5.3 Content

The Contractor's RSPL must contain, at a minimum but not limited to, the following information for each identified recommended spare part:

a. Item Name;

b. Manufacturer;

c. Manufacturer model number;

d. Manufacturer part number;

e. Quantity recommended to support a single package of curtain boom over two years of operation;

f. Quantity recommended for warehousing;

g. Expiry;

h. Price per unit;

i. Lead time when ordering;

j. Warranty (extended if applicable);

k. NATO Stock Number (if applicable);

l. Recommended packaging with consideration of disposability, reuse, recycling, and conservation;

m. Recommended storage requirements and conditions;
n. Recommended maintenance (if applicable); and
o. Identification as a critical spare.

DATA ITEM DESCRIPTION	
1. TITLE **Special Tools and Test Equipment List**	**2. IDENTIFICATION NUMBER** **DID-ILS-02**

3. DESCRIPTION

The Special Tools and Test Equipment (STTE) List provides recommendations and other information required to assist Canada in decisions regarding the conceivable procurement of special tools and test equipment required for the maintenance (preventive and corrective repair) of the system, as well as special tools and equipment required for an emergency repair kit.

4. Application

This DID contains the format, content, and preparation instructions for the STTE List as required by the Statement of Work (SOW), Section 5.2.

5. Data Preparation Instructions

5.1 Source Document

5.1.1 The applicable issue of the documents cited herein, including their approval dates and dates of any applicable amendment notices and revisions must be as specified in the Contract.

5.2 Format

5.2.1 The STTE List data must be provided in a Microsoft Excel 2010 spreadsheet, unless otherwise specified by Canada, including the following:

5.3 Content

The Contractor's STTE List must contain, at a minimum, the following information for each identified item:

a. Item Name;

b. Manufacturer;

c. Manufacturer model number;

d. Manufacturer part number;

e. Quantity recommended to support a single package over two years of operation;

f. Quantity recommended for warehousing;

g. Expiry;

h. Price per unit

i. Lead time when ordering

j. Warranty (extended if applicable);

k. NATO Stock Number (if applicable);

l. Recommended packaging for shipment;

m. Recommended storage requirements and conditions;
n. Recommended maintenance (if applicable); and
o. Identification as a component of an emergency repair kit.

DATA ITEM DESCRIPTION	
1. TITLE **Technical Maintenance Manual - Curtain Boom and Curtain Boom Accessory Package**	**2. IDENTIFICATION NUMBER** **DID-ILS-03**

3. DESCRIPTION

The Technical Maintenance Manual must provide Canada with all the necessary information to permit safe performance testing, servicing, inspections, and adjustment of the equipment for the preventive maintenance, corrective maintenance, as well as specialized maintenance, in order to maintain its original level of operational capability.

4. Application

This DID contains the format, content, and preparation instructions for the Technical Maintenance Manual as required by the Statement of Work (SOW), Section 5.3.

5. Data Preparation Instructions

5.1 Source Document

5.1.1 The applicable issue of the documents cited herein, including their approval dates and dates of any applicable amendment notices and revisions must be as specified in the Contract.

5.2 Format

5.2.1 The document may be in the Contractor's format, and must be printable on 8.5x11 size paper. Soft copies must be provided in a format compatible with Microsoft Office 2010. The document must include labelled diagrams and step-by-step instructions. The document must be provided in English and Canadian French languages.

5.3 Content

5.3.1 *Preventive maintenance*:
At a minimum, the Contractor must indicate maintenance intervals and recommend specific activities for the following. Storage container maintenance recommendations are to be included (as applicable).

a. Routine preventive maintenance;

b. In-field (during a spill response) maintenance;
c. Maintenance dictated by regulatory requirements (e.g., safety equipment);
d. Maintenance tasks that ensure Canada complies with any warranty obligations; and
e. Calibrations (if required).

The Contractor must provide the accompanying procedure(s) to perform each recommended maintenance activity. While not an exhaustive list, each maintenance procedure must identify the following items:

f. The number of personnel and the estimated time to perform the procedure;
g. A list of potential hazards and the recommended engineering controls and personal protective equipment (PPE) to use when performing the procedure;
h. A list of all parts, consumables, tools or equipment required to perform the maintenance procedure;
i. Instructions (including pictograms) to perform the maintenance procedure safely; and
j. Any activity needed to verify that the maintenance procedure was performed correctly (if warranted).

In addition to the comprehensive maintenance schedule, the Contractor must also provide pre- and post-operational checklists for all supplied and furnished equipment:

k. The pre-operational checklist must define all indicators to ensure that the equipment is response ready prior to deployment;
l. The post-operational checklist must supplement its counterpart with procedures for decontamination and recommended storage practices; and
m. Each post-operational procedure must contain the same general items specified above for maintenance procedures.

5.3.2 *Corrective maintenance*:
The Contractor must provide corrective maintenance activities for all critical supplied and furnished equipment. While not an exhaustive list, as part of this, the Contractor must:

a. Delineate troubleshooting instructions to properly identify, isolate, and rectify faults; and
b. Specify those activities needed to verify that the equipment has been returned to an operational state.

5.3.3 *Specialized maintenance*
The Contractor must, at a minimum, identify any maintenance activities

(over and above routine preventive and corrective maintenance) that should be conducted by the Contractor or a qualified third party. Such maintenance activities would warrant specialized training to address a particular technical complexity or risk outside of the Technical Maintenance Training Sessions identified in SOW Section 4.2.

DATA ITEM DESCRIPTION	
1. TITLE **Operations Manual**	**2. IDENTIFICATION NUMBER** **DID-ILS-04**

3. DESCRIPTION

The Operations Manual must provide sufficient details to instruct the end users on the operating use of the equipment, including the curtain boom, supporting accessories (curtain boom accessory package), and the storage container.

4. Application

This DID contains the format, content, and preparation instructions for the Operations Manual as required by the Statement of Work (SOW), Section 5.4.

5. Data Preparation Instructions

5.1 Source Document

5.1.1 The applicable issue of the documents cited herein, including their approval dates and dates of any applicable amendment notices and revisions must be as specified in the Contract.

5.2 Format

5.2.1 The document may be in the Contractor's format and must be printable on 8.5x11 size paper. Soft copies must be provided in a format compatible with Microsoft Office 2010. The document must include labelled diagrams and step-by-step instructions. The document must be provided in English and Canadian French languages.

5.3 Content

5.3.1 At a minimum, all the pertinent details regarding the following information must be included:

a. How to operate the equipment;
b. How to install and remove the equipment;
c. How to trouble-shoot the equipment;
d. How to trouble-shoot the equipment in the field (if it differs from ‘c’);
e. How to safely clean and decontaminate the equipment; and
f. How to safely handle and store the equipment (including the identification of cautions and warnings to prevent crew and equipment from damage).

DATA ITEM DESCRIPTION	
1. TITLE **Equipment Instructions Illustration**	**2. IDENTIFICATION NUMBER** **DID-ILS-05**

3. DESCRIPTION

The Equipment Instructions Illustration must illustrate through a combination of text and illustration/pictograms the appropriate deployment and storage of the equipment. This illustration will be posted on a door or wall for quick reference by personnel who have been previously trained in the usage of the equipment.

4. Application

This DID contains the format, content, and preparation instructions for the Equipment Instructions Illustration as required by the Statement of Work (SOW), Section 5.4.

5. Data Preparation Instructions

5.1 Source Document

5.1.1 The applicable issue of the documents cited herein, including their approval dates and dates of any applicable amendment notices and revisions must be as specified in the Contract.

5.2 Format

5.2.1 The document must meet the format specifications as described in the Technical Statement of Requirements (TSOR) Section 3.6.3. Soft copies must be provided in PDF format compatible with Adobe Reader XI.

5.3 Content

5.3.1 At a minimum, the following information must be included:

a. Labelled diagrams;

b. Step-by-step instructions displayed with a combined use of text and pictograms;

c. Safe handling instructions;

d. Deployment techniques from on land and from a vessel;

f. Decontamination techniques; and

e. Storage procedures.

DATA ITEM DESCRIPTION	
1. TITLE **As-Assembled Drawing Package**	**2. IDENTIFICATION NUMBER** **DID-ILS-06**

3. DESCRIPTION

The As-Assembled Drawing Package must include schematics of all equipment with technical detail demonstrating all assembly components and interconnection between assembly components.

4. Application

This DID contains the format, content, and preparation instructions for the As-Assembled Drawing Package as required by the Statement of Work (SOW), Section 5.4.

5. Data Preparation Instructions

5.1 Source Document

5.1.1 The applicable issue of the documents cited herein, including their approval dates and dates of any applicable amendment notices and revisions must be as specified in the Contract.

5.2 Format

5.2.1 The schematics must be in accordance with accepted industry standards and must conform to the format detailed in the CCG ITS Computer Aided Design (CAD) Drafting Standard (refer to Appendix 3), unless otherwise agreed to by Canada.

5.3 Content

5.3.1 The schematic must include all assembly components and interconnection between assembly components. At a minimum, the technical drawings must contain the following:

a. Drawing title;
b. Drawing number;
c. Revision number;
d. General arrangement; and
e. Tabulated part lists with:
    i. Item No;
    ii. Part Name;
    iii. Manufacturer's Part Number;
    iv. Quantity;
    v. Specification or Standard; and
    vi. Supplier Comments.

DATA ITEM DESCRIPTION	
1. TITLE **Indigenous Subcontracting Report**	**2. IDENTIFICATION NUMBER** **DID-IE-01**
3. DESCRIPTION The Indigenous Subcontracting Report provides information regarding subcontracts awarded to indigenous businesses, particularly in areas with Comprehensive Land Claims Agreements (CLCAs).	
4. Application This DID contains the format, content, and preparation instructions for the Indigenous Subcontracting Report as required by the Statement of Work (SOW), Section 5.4.	
5. Data Preparation Instructions **5.1 Source Document** 5.1.1 The applicable issue of the documents cited herein, including their approval dates and dates of any applicable amendment notices and revisions must be as specified in the Contract. **5.2 Format** 5.2.1 The document may be in the Contractor's format, and must be printable on 8.5x11 size paper, and as further described herein. Soft copies must be provided in a format compatible with Microsoft Office 2010. **5.3 Content** 5.3.1 At a minimum, the following information must be included: a. The name of the applicable CLCA; b. Name of the subcontractor; c. Subcontract # or requisition #; d. Subcontract award date; e. Subcontract expiry date; f. The value of the Subcontract; g. A short description of the subcontracted goods or services.	

APPENDIX 3 CCG ITS COMPUTER AIDED DRAFTING (CAD) STANDARD

Fisheries and Oceans Canada | Pêches et Océans Canada

Canadian Coast Guard | Garde côtière canadienne

CT-014-000-ES-TD-001

Computer Aided Design (CAD) Using AUTOCAD®

SALUTI PRIMUM AUXILIO SEMPER

Canadian Coast Guard

Standard

Published under the Authority of:

Integrated Technical Services Directorate
Fisheries and Oceans Canada
Canadian Coast Guard
Ottawa, Ontario

K1A 0E6

CT-014-000-ES-TD-001
COMPUTER AIDED DESIGN (CAD) USING AUTOCAD

FIRST EDITION – MAY 2013

EKME# 263153

Available on CCG Intranet site at:
http://ccg-gcc.ncr.dfo-mpo.gc.ca

Disponible en français : **Conception et Dessin assisté par ordinateur (CDAO) à l'aide d'AutoCAD®**

Printed on recycled paper

Document template :	English
Print Format:	Double Sided
Last revision:	August 2010
Compatibility:	Word 97 & 2002 (XP)

Document Control

Record of Amendments

#	Date	Description	Initials

Approvals

Office of Primary Interest (OPI) Technical/Project Officer, Technical Data	Jacques Chagnon	Approved:	
		Date:	
Manager, Configuration Management and Technical Data Management	Yvon Johnson	Approved:	
		Date:	
Director, Integrated Logistic Support (ILS)	Neil O'Rourke	Approved:	
		Date:	
Director, Electronics and Informatiques	Sam Ryan	Approved:	
		Date:	
Director, Marine Engineering	Gary Ivany	Approved:	
		Date:	
Director General, Integrated Technical Services	Michel Cécire	Approved:	
		Date:	

This page left intentionally blank.

Table of Contents

Document Management

1. Authority

This document is issued by the Director General, Integrated Technical Services, Canadian Coast Guard (CCG)'s National Technical Authority under delegation from the Deputy Minister, Fisheries and Oceans (DFO) and the Commissioner of the CCG.

2. Responsibility

a) The Integrated Logistic Support branch is responsible for:

i) the creation and promulgation of the document; and

ii) the identification of an Office of Primary Interest who is responsible for the coordination and the content of the document.

b) The Office of Primary Interest is responsible for:

i) the validity and accuracy of the content;

ii) the availability of this information;

iii) the update as needed;

iv) the periodical revision; and

v) the follow-up of all requests, comments and/or suggestions received by the originator.

3. Inquiries and/or Revision Requests

All inquiries regarding this document, including suggestions for revision and requests for interpretation shall be addressed to:

Position Title: Technical / Project Officer, Technical Data
Address: Mail Stop 7N135B
200 Kent St, Ottawa,
Ontario, K1A 0E6

All requests should:

i) be clear and concise; and

ii) reference the specific Chapter, Section, Figure or Table.

This page left intentionally blank.

Foreword

The Computer Aided Design (CAD) Drafting Standard provides a source of information for design and production of engineering and construction drawings depicting the Canadian Coast Guard's physical assets.

The document has equal authority in either official language. Where problems of interpretation arise, preference shall be given to (in decreasing order of priority) the latest version of this document, the CCG Technical Data Management Standard CA-014-000-NS-TD-001 referring to this document, or the applicable commercial standard reflecting the true spirit, intent and meaning of the work to be done.

1. Purpose

This Computer Aided Design (CAD) drafting standard sets forth the general rules and practices to be used in the preparation of drawings for the CCG, and as a basis for the preparation of subordinate Guidance documentation and associated Work Instructions.

This is not intended as a manual of instruction in the basic principles of drafting. It must be assumed that the personnel engaged in the preparation of drawings have sufficient experience in the fundamentals of drafting to enable them to produce technical drawings.

2. Scope

This standard is to be used for the preparation of all Engineering drawings using AutoCAD®. This standard is the primary source of information whenever a question arises concerning the preparation of drawings for Canadian Coast Guard.

3. Source of Information

A list of international standards and coordinate information are to be found in Annex A.

This page left intentionally blank.

Chapter 1 GENERAL DRAWING RULES

In absence of directives one should follow international industry standards and remain consistent. Suggested list of international standard institutes can be found in Annex A.

1.1 CCG TEMPLATE

All technical Drawings must be created using CCG package, which can be obtained from the CCG project manager or contacts listed in Annex A.

1.2 DRAWING FILE FORMAT

The CAD drawings shall be delivered in AutoCAD® Native format DWG and also in Real size PDF format.

1.3 DRAWING FILE CONTENT

Drawings shall respect following criteria:

1) Drawings must be modelled at full scale in "Model Space". "UCS" is to be set to "World". Text, symbols, hatch patterns and line widths are to be adjusted by the required scale factor.

2) The title block shall be used in paper space only.

3) Drawings will be saved in AutoCAD® version 2008 or to the latest accepted version by CCG.

4) PDF format should have a white background and the color adjusted in order to obtain good contrast ex: yellow on white is not accepted.

5) Drawings will be saved in the "Paper Space" mode with the view selected to "Zoom Extents".

6) No objects should reside on layer "0" or "DEFPOINTS" except for objects contained in a block definition or dimensions. Use the "Plot/Non plot" layer instead of the "Defpoints" layer.

7) Drawings are to be purged of all unused objects.

8) Drawings must not contain any object definitions without geometry, such as empty text or blocks without objects.

9) The "Audit" command must be performed before delivery.

10) Drawings will have the "Ltscale" adjusted for printing.

11) When applicable, all external reference "XRef" must be delivered with the drawing.

12) All new fonts, fill patterns and other user preference settings added to those of the basic AutoCAD® program must be supplied with the DWG digital files (by using, for example, "***Pack and GO*** ", " ***eTransmit*** ").

This page left intentionally blank.

Chapter 2 TITLE BLOCK TEMPLATE

The National CCG Title Block template shall be used for all drawings. A complete set of title blocks in all sheet sizes used by the CCG are available from the National Headquarters Technical Project Officer, Technical Data. An example of CCG title block can be seen in Annex C Figure 1. The drawing title block shall be completed as follows:

2.1 LAYOUT "PAPER SPACE"

The title block template shall be used in paper space only. Title blocks inserted in Model Space are not acceptable.

2.2 BLOCK ATTRIBUTE

All CCG title block attributes are pre-set, and the integrity must be maintained.

Official DFO / CCG organization marking. Do not change.

All vendor information shall be located in the vendor information data area. When applicable the engineering stamp is to be placed in this area.

This data field shall consist of the following:
First attribute is the name of the asset: e.g. name of the ship, area of navaid, etc…
Second attribute is the description/ type: e.g. MSPV (Mid Shore Patrol Vessel), Lighthouse, etc…

Brief description shall be entered in this field such as: The name by which the part or items shall be known, equipment type, number, drawing type and shall include the Drawing release level (ex: conceptual, as fitted, etc.)

Date shall be entirely numeric following YYYY-MM-DD format as per ISO 8601 standard.
N.B:When drawings have been redrawn, the new draftsperson's name and date will appear in the revision comment data field.

Examples of scales and the method of designating different scales can be found in Annex B. Drawings which are not drawn to a specific scale, the scale field shall read "N/A".

When available the official CCG Contract project number shall be indicated in this field.

Revisions shall be consistent with the original method. Best practice would be to use letters for design/conceptual and numerical for construction and post-construction.

The drawing number, as specified in chapter 3 shall be inserted in this field.

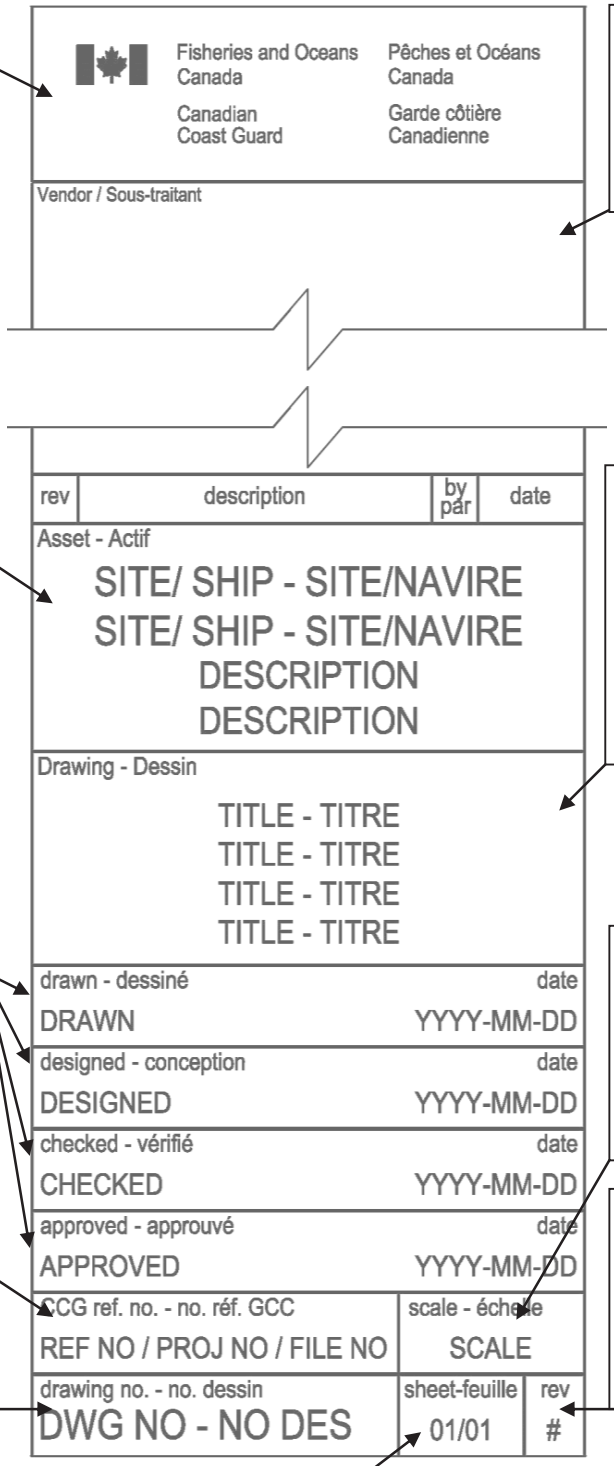

The drawing sheet number shall be entered within this field. When only one sheet is drawn, 01/01 shall be inserted. For multi-sheet drawings, 01/05, 02/05 etc. shall be used.

Chapter 3 DRAWING NUMBER

3.1 INTERNAL USE:

Drawing numbering will be identified to ensure that assets, systems, and equipment drawing numbers within the CCG will be unique to the items depicted. Numbers for internal drawing shall follow the approved national CCG numbering standards. In absence of an approved national numbering standard, numbering shall be in accordance with local numbering system, and avoiding duplicity with existing national CCG numbers as much as possible.

3.2 CONTRACTOR USE:

Contractors are recommended to obtain drawing numbers provided by the CCG. However, a drawing number following the contractor's numbering convention may be used, as long as it follows a standard. In such a case, the standard used shall be included as a deliverable of the project. In absence of a compliant numbering system the contractor shall follow the CCG numbering standard. In all cases unique numbering is the objective, avoiding duplication with existing contractor and CCG drawing identification numbers.

This page left intentionally blank.

Chapter 4 GENERAL DRAWING PRACTICE

4.1 SIZE AND FORMAT

4.1.1 Layout

Each drawing shall consist of no more than one layout to accommodate CCG metadata management system.

4.1.2 Model space

As much as practical, drawings must be modelled at full size using the International System of Units (S.I.).

4.2 ANNOTATIVE MODE

Consistency in use of annotative mode is mandatory. It is preferred not to use annotative and non-annotative style simultaneously.

4.3 TEXT STYLE STANDARD

1) True type font shall be used in all text style within drawings.

2) Preferred font file is Arial.

3) Font usage should be uniform throughout each project. The height of text must be set to 0 (not fixed) so that it can be changed to suit different scaling requirements.

4) All French characters should be accented whether upper or lower case.

5) Private company logos must not contain a special font file.

6) Paragraphs must be created with “MTEXT” command.

7) It is recommended to use only annotative style.

4.4 DIMENSION STYLE STANDARD

All dimensioning must be created on entities in model space with associative dimensions.

Annotative dimension styles are preferred.

Two dimensioning formats shall be used to cover most applications:

1) Engineering with arrowheads for dimension terminators.
2) Architectural with ticks for dimension terminators.

4.5 ORTHOGRAPHIC PROJECTION SYMBOLS

Projection symbols shall be placed as a note, only when it differs from third angle projection.

4.6 SHEET SIZE FOR PAGE SETUP

Below are the common sheet sizes used by CCG and are included in the CCG Package. Sheet sizes that differ to those below can be used but shall meet commercial standards and respect CCG's Title block template and attributes integrity:

Sheet Designation	Overall Size (mm)
A0	841 x 1189
A1	594 x 841
A2	420 x 594
B1	707 X 1000
Arch D	610 X 914
Arch E	864 X 1118
11 x 17 ANSI B	279 x 432
8.5 x 14	216 x 356
8.5 x 11	216 x 279

Note: When drawings larger than A0 are required, it is recommended that they use a width of 889mm.

Chapter 5 LAYER AND LAYER STRUCTURE

5.1 SCRIPT

Scripts are available in the CCG package to automatically create discipline specific layers. In the event that the CCG layering system is not used, the third party shall provide their layering system information with the deliverable.

5.2 LAYER NAMING

Layer naming systems shall be used and based on the specific usage of the drawing information. It shall be used to distinguish system types, component sizes and/or materials, manufacturing data, geometric location or orientation, type of drawing entity and other uses specific to the needs of the user. The following general layer system guidance shall be applied to all drawings.

5.3 LAYER SYSTEM

At a minimum, layering systems shall provide at least one separate layer name for each of the following elements:

1) Notes and other text not part of dimensions;

2) Dimensions;

3) Reference or construction lines that do not represent actual material or structure, such as baselines, centerlines, lines of frames, perpendiculars, etc.;

4) Systems, structure or components used as background, not ordered or modified by the drawing;

5) Specialized information;

6) Drawing features such as section or detail cut lines, break lines, and similar non-physical entities;

7) Layer Specification; and

8) Revision entities outside of the revision block such as revision triangles, hashing and revision clouds shall be on a separate layer for each revision.

Layer names shall not be used solely to distinguish between line types or colors. Layer names used to distinguish line types or colors shall include elements that also identify the entities as to drawing function.

Line weight must be included in the layer information. Layers structure used within the standard Coast Guard drawing template shall not be changed.

This page left intentionally blank.

Annex A REFERENCES

A.1 INTERNATIONAL STANDARDS INSTITUTES

American Society of Mechanical Engineers (ASME)

Three Park Avenue
New York, NY 10016-5990

American National Standards Institute (ANSI)

1899 L Street, NW, 11th Floor
Washington, DC, 20036

International Organization for Standardization (ISO)

1, ch. de la Voie-Creuse
CP 56 CH-1211 Geneva 20
Switzerland

American Society for Testing and Materials (ASTM)

100 Barr Harbor Drive, West
Conshohocken,Pennsylvania, USA

American Welding Society, Inc. (AWS)

8669 Doral Boulevard,
Doral, Florida 33166

National Electrical Manufacturers Association (NEMA)

1300 North 17th Street
Suite 1752
Rosslyn, Virginia 22209

Canadian Standards Association, (CSA)

178 Rexdale Blvd.
Toronto, Ontario
Canada M9W 1R3

Aerospace Industries Association of America, (AIA)

1000 Wilson Boulevard, Suite 1700
Arlington, VA, 22209

Society of Automotive Engineers (SAE)

400 Commonwealth Drive
Warrendale, PA 15096-0001 USA

A.2 REGIONAL/HEADQUARTERS ILS

Headquarters
200 Kent Street, Centennial Towers
Station 7W124,
Ottawa, ON K1A 0E6

Western
25 Huron Street,
Victoria BC V8V 4V9

Central & Arctic
101 Champlain Blvd.,
Québec QC G1K 7Y7

520 Exmouth Street,
Sarnia, ON N7T 8B1

Atlantic
Canadian Coast Guard Base
Southside Road
P.O. Box 5667
St. John's, NL A1C 5X1

4-50 Discovery Drive
P.O. Box 1000
Dartmouth, NS B2Y 3Z8

Annex B EXAMPLE SCALE

Stage	Type of drawing	Scale	Notes
Design	Sketch and preliminary drawings	-	Scales will vary but it is recommended that preference be given to those used in the working drawing stage.
	Location drawings	-	Scale will vary according to maps used as reference.
Working Drawing	Key Plan	1:2000 1:1000	
	Site Plan	1:500 1:200	
	General location drawings	1:200 1:100 1:50	
	Component range drawings	1:100 1:50 1:20	
	Assembly drawings	1:20 1:10 1:5 1:2 1:1	
	Component details drawings	1:10 1:5 1:2 1:1	

This page left intentionally blank.

Annex C TITLE BLOCK

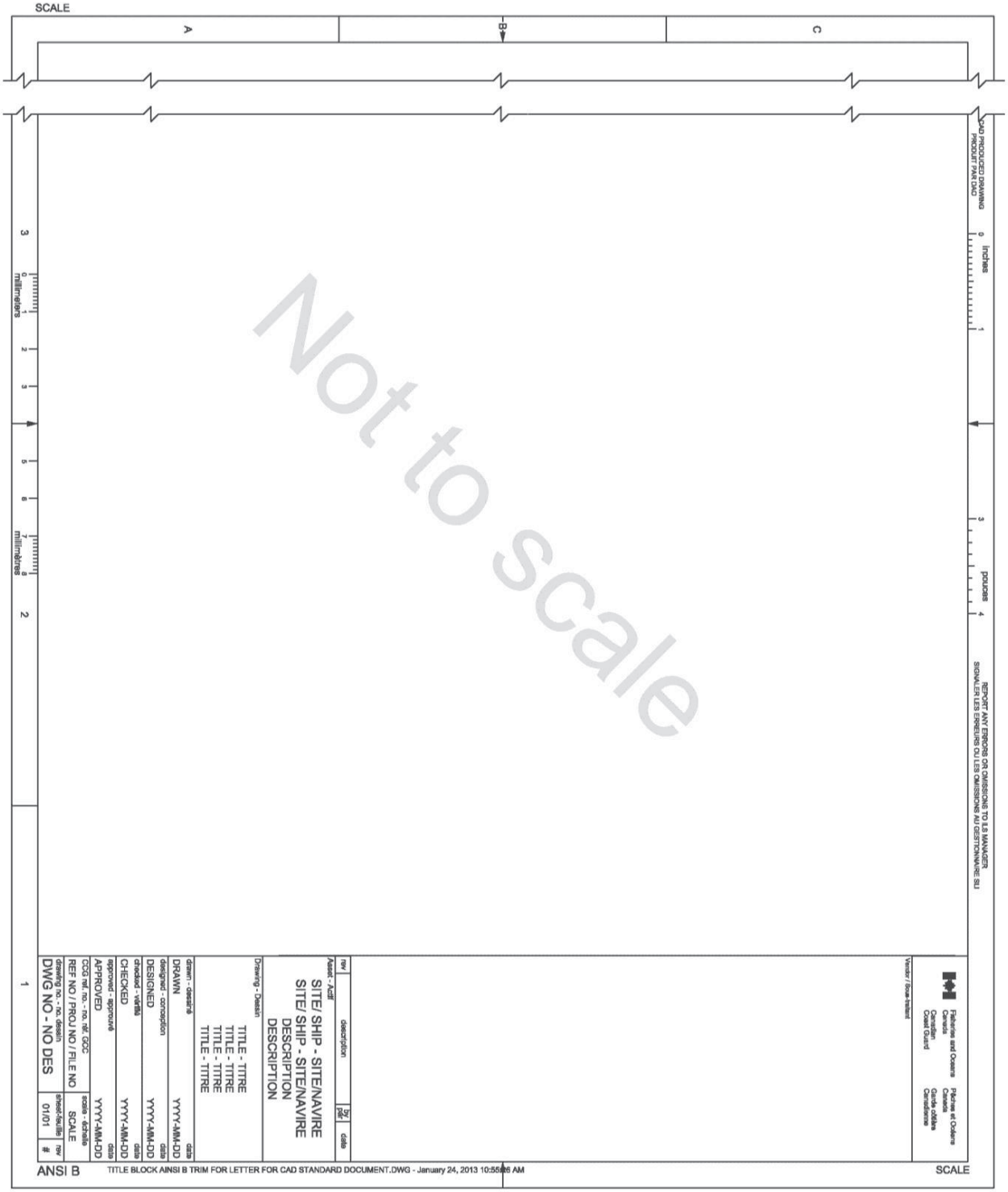

Annex B

Technical Statement of Requirements

Environmental Response Equipment Modernization/ Mobile Incident Command Equipment Project

Boom – Curtain – Round Floatation Boom 24”

TERMINOLOGY AND DEFINITIONS

Flake	The act of laying out or folding containment boom in parallel rows.
Mousing	A technique used to preclude the pin on a shackle from working itself loose due to vibration. A seizing wire is passed through the eye of the shackle pin and around the bow of the shackle to achieve this effect.
Off-the-shelf	Any standard articles and materials that are ordinarily produced by manufacturers in the normal course of business.

LIST OF ACRONYMS AND ABBREVIATIONS

ABS	Acrylonitrile butadiene styrene
ASME	American Society of Mechanical Engineers
ASTM International	Formerly known as the American Society for Testing and Materials
CCG	Canadian Coast Guard
ConOps	Concept of Operations
DD	Two-digit day
DWL	Design water line
EKME	Electronic Knowledge Management Environment
EPDM	Ethylene propylene diene monomer rubber
EREP	Environmental Response Equipment Program
FIP	Federal Identity Program
GSA	General Services Administration
ISO	International Organization for Standardization
LED	Light-emitting diode
MGCE	Milieu de gestion de connaissances électroniques
MM	Two-digit month
OEM	Original equipment manufacturer
OPI	Office of Primary Interest
PRO	Pollution Response Officer
PVC	Polyvinyl chloride
RF	Radiofrequency
RO	Response Organization
SOR	Statement of Operational Requirements
SOW	Statement of Work
TA	Technical Authority
TSOR	Technical Statement of Requirements
UV	Ultraviolet
YYYY	Four-digit year

SECTION 1 INTRODUCTION

1.1. SCOPE

This Technical Statement of Requirements (TSOR) document defines the functional- and performance-based requirements for curtain-type, containment boom (hereinafter referred to as only "curtain boom"). These requirements help to satisfy the Concept of Operations (ConOps) established by the Canadian Coast Guard (CCG) to carry out pollution spill responsibilities; they are also aligned with industry best practices and standards, where applicable.

1.2. OPERATIONAL ROLE AND REQUIREMENTS

Curtain boom will be deployed by CCG personnel to contain or redirect spilled oil in calm and protected waters. All curtain boom will use a standardized end connection to facilitate the connection and disconnection of boom sections in and out of the water. Curtain boom may also be paired with similar boom maintained by the regional Response Organizations (ROs). During oil spill response situations, curtain boom may be towed either by a single vessel or two vessels operating in concert; curtain boom may also be anchored in place for prolonged periods.

1.3. TERMINOLOGY

The term **MUST** is used to identify mandatory requirements which must be met by the Contractor and approved by the Technical Authority. The term **SHOULD** is used to identify a requirement that is not mandatory, however, such a requirement will contribute to immediate benefits of the equipment and system processing.

1.4. SYSTEM OVERVIEW

The **curtain boom package** comprises both curtain boom and the curtain boom accessory package. Some curtain boom package deliveries may include a storage container, if this option is exercised by Canada. The storage container provides sufficient space to protect the curtain boom and curtain boom accessories from inclement weather; it also facilitates the transport of the curtain boom package to the spill site.

References to the curtain boom package pertain to all components of the curtain boom, curtain boom accessory package, storage container, connectors, and any other components thereof, regardless of whether or not they are acquired individually, in part, or as a complete package.

Curtain boom

Curtain boom is a deployable containment boom design that uses floatation elements for buoyancy, a fabric membrane that acts as a barrier to floating oil, and tension members to transfer longitudinal tensile loads. The curtain boom is manufactured in separate sections to facilitate handling, and these sections are joined using ASTM International end connectors.

Curtain boom accessory package

The curtain boom accessory package contains all of the components required to tow and anchor the boom in a fixed position. These components include towlines, tow paravanes, tow bridles, boom anchor kits, and boom anchor lights.

SECTION 2 REFERENCE DOCUMENTATION

2.1. APPLICABLE STANDARDS AND SPECIFICATIONS

The following industry standards and specifications apply to the curtain boom package and the storage container:

- American Society of Mechanical Engineers (ASME), B30.26-2015: Rigging Hardware;
- ASME, B30.9-2014: Slings;
- ASTM International, ASTM A153/A153M-16a, Standard Specification for Zinc Coating (Hot-Dip) on Iron and Steel Hardware;
- ASTM A413/A413M-07 (2012), Standard Specification for Carbon Steel Chain;
- ASTM A510/A510M-13, Standard Specification for General Requirements for Wire Rods and Coarse Round Wire, Carbon Steel, and Alloy Steel;
- ASTM A576-90b (2012), Standard Specification for Steel Bars, Carbon, Hot-Wrought, Special Quality;
- ASTM A909/A909M-06 (2016), Standard Specification for Steel Forgings, Microalloy, for General Industrial Use;
- ASTM A1023/A1023M-15, Standard Specification for Stranded Carbon Steel Wire Ropes for General Purposes;
- ASTM B209-14, Standard Specification for Aluminum and Aluminum-Alloy Sheet and Plate;
- ASTM B221-14, Standard Specification for Aluminum and Aluminum-Alloy Extruded Bars, Rods, Wire, Profiles, and Tube;
- ASTM B928/B928M-15, Standard Specification for High Magnesium Aluminum-Alloy Products for Marine Service and Similar Environments;
- ASTM D751-06 (2011), Standard Test Methods for Coated Fabrics;
- ASTM D6775-13, Standard Test Method for Breaking Strength and Elongation of Textile Webbing, Tape, and Braided Material;
- ASTM F593-13ae1, Standard Specification for Stainless Steel Bolts, Hex Cap Screws, and Studs;
- ASTM F594-09 (2015), Standard Specification for Stainless Steel Nuts;
- ASTM F625/F625M-94 (2011), Standard Practice for Classifying Water Bodies for Spill Control Systems;
- ASTM F962-04 (2010), Standard Specification for Oil Spill Response Connection: Z-Connector;

- ASTM F1093-99 (2012), Standard Test Methods for Tensile Strength Characteristics of Oil Spill Response Boom;
- ASTM F2438-04 (2017), Standard Specification for Oil Spill Response Boom Connection: Slide Connector;
- International Organization of Standardization (ISO) 668:2013, Series 1 Freight Containers – Classification, Dimensions, and Ratings;
- ISO 1161:2016, Series 1 Freight Containers – Corner and Intermediate Fittings – Specifications;
- ISO 1496-1:2013, Series 1 Freight Containers – Specification and Testing Standards;
- ISO 2230:2002, Rubber Products – Guidelines for Storage; and
- United States General Services Administration (GSA), Federal Specification RR-C-271F, Chains and Attachments, Carbon and Alloy Steel;

2.2. ORDER OF PRECEDENCE

Where discrepancies exist between this Document and the standards and specifications specified herein, the Contractor must adhere to the following order of precedence:

a. This Document; and

b. Industry and other applicable standards.

In the event of any inconsistency within this TSOR, the Contractor must contact the Contracting Authority for clarification.

SECTION 3 REQUIREMENTS

3.1. OPERATIONAL REQUIREMENTS

3.1.1. ENVIRONMENTAL CONDITIONS

3.1.1.1. The curtain boom package and storage container must be suitable for operational use in air temperatures ranging from -15 degrees Celsius (°C) to +35°C.

3.1.1.2. The curtain boom fabric must withstand folded storage in air temperatures ranging from -40°C to +60°C.

3.1.1.3. The curtain boom and curtain boom accessory package must operate in water temperatures ranging from -2°C to +30°C.

3.1.1.4. The curtain boom and curtain boom accessory package must operate in both fresh and salt waters.

3.1.1.5. The curtain boom must be suitable for Type II-Protected Waters as per ASTM F625/F625M-94 (2011), Standard Practice for Classifying Water Bodies for Spill Control Systems. Type II-Protected Waters are equivalent to wave heights ≤1 metre (m) or Beaufort Force 3 sea conditions.

3.1.2. MAINTAINABILITY

3.1.2.1. The Contractor must standardize the selection of fasteners, hardware, attachments, fittings, and fabrication methods used in the curtain boom package to minimize the number of unique spares. Following Canada's acceptance of the first article testing results, the Contractor must use identical components in all subsequent curtain boom package deliveries (unless otherwise specified by Canada).

3.1.2.2. The use of any specialized tools and equipment must be restricted to infrequent and complex service work.

3.2. WORKMANSHIP

3.2.1. FABRICATION

3.2.1.1. Each curtain boom package must be constructed and finished with a high degree of workmanship. At a minimum, the Contractor must ensure:

a) Surfaces are free from blemishes, burrs, defects, irregularities, sharp edges, and other conditions that would be deleterious to the finished component;

b) Component dimensions are accurate and conform to the required tolerances;

c) Parts are properly aligned to preclude any binding and deformation as a result of assembly or operation; and

d) All coatings are uniform, complete, and free of cracks, porosity, and scratches.

3.2.2. ALUMINUM WELDING

3.2.2.1. The Contractor must ensure that all aluminum welds performed during fabrication conform to the applicable requirements defined in the following Standards:

a) CSA W47.2-11 (R2015), Certification of Companies for Fusion Welding of Aluminium (or equivalent); and

b) CT-043-EQ-EG-001-E, CCG Welding Specification, August 2017 (or equivalent), as detailed in Appendix A.

Note that the Contractor may propose alternative standards to CSA W47.2-11 (2015), Certification of Companies for Fusion Welding of Aluminum, and the standards referenced in CT-043-EQ-EG-001-E, CCG Welding Specification, August 2017 to Canada. For each proposed alternative welding standard, the Contractor must demonstrate that the technical intent of CSA W47.2-11 (2015), Certification of Companies for Fusion Welding of Aluminum, and the standards referenced in CT-043-EQ-EG-001-E, CCG Welding Specification, August 2017 is met. The demonstration of technical intent must be achieved by a compliance audit conducted by either (or both) the CCG and the Canadian Welding Bureau (CWB) before construction can commence.

3.2.3. CARE AND PROTECTION OF MATERIALS AND COMPONENTS

3.2.3.1. All materials and components used in the curtain boom package must be kept clean and protected against dust, moisture, rapid temperature changes, and foreign matter during manufacture, storage, pre-installation staging, assembly or installation, and post-installation.

3.2.4. DISSIMILAR METALS

3.2.4.1. Direct contact between dissimilar metals expected to cause galvanic corrosion must be avoided. When such contact cannot be avoided, an interposing insulating material must be installed (e.g., gaskets, washers, sleeves, or bushings) to separate the components and minimize the corrosive effect.

3.3. CURTAIN BOOM

3.3.1. PHYSICAL CONSTRUCTION

3.3.1.1. Unless otherwise specified by Canada, the total length of curtain boom supplied in a curtain boom package must be 1000 feet (ft).

3.3.1.2. All supplied curtain boom must be segmented into 50 ft (+0.5 ft, -0 ft)[1] sections for ease of handling.

3.3.1.3. Fold points must be incorporated every 5 ft into each curtain boom section to facilitate flaking for storage.

3.3.1.4. The nominal height of each curtain boom section must be no less than 22 inches (in) and no larger than 24 in.

3.3.2. ATTACHMENTS, FASTENERS, AND HARDWARE

3.3.2.1. Unless otherwise specified by Canada, all shackles used in the curtain boom package must conform to the requirements prescribed for Type IVA, Class 2, Grade A shackles (i.e., screw-pin anchor shackles) in RR-C-271F, Chains and Attachments, Carbon and Alloy Steel.

3.3.2.2. Unless otherwise specified by Canada, all bolted connections must comprise a hex-head bolt paired with a corresponding nylon-insert, lock nut to resist loosening from shock and vibrational loading.

3.3.3. FLOATATION ELEMENTS

3.3.3.1. Each curtain boom section must use integral floatation elements at the waterline to provide buoyancy.

3.3.3.2. Each floatation element must be isolated from the surrounding environment by the curtain boom fabric to ensure continuous protection against water, hydrocarbons, and ultraviolet (UV) light exposure.

3.3.3.3. The cross-section of each floatation element must be circular, with a constant nominal diameter no less than 6 in and no larger than 8 in. Any wrapping of a floatation element with one or more sheet(s) to achieve the desired diameter is prohibited.

3.3.3.4. Each floatation element fitted between the end of a curtain boom section and a fold point, or two fold points must be a single, continuous extrusion.

[1] All specified tolerances will adhere to the following nomenclature hereinafter: (upper deviation from the nominal size, lower deviation from the nominal size)

3.3.3.5. Each curtain boom section must employ some means to preserve the original orientation of the floatation elements along its longitudinal axis (e.g., webbing straps or individual fabric welds).

3.3.3.6. The ends of each floatation element must facilitate flaking without adversely affecting the freeboard of the curtain boom sections (e.g., beveled ends).

3.3.4. TENSION MEMBERS

3.3.4.1. Each curtain boom section must use a continuous piece of new, uniform, and unaltered webbing for the top tension member. A tension member constructed of individual pieces of webbing, either of the same width or different widths, is prohibited.

3.3.4.2. The width of the webbing top tension member must be no larger than 1 in.

3.3.4.3. Each curtain boom section must be constructed with a fully enclosed pocket to house the webbing top tension member.

3.3.4.4. The webbing top tension member pocket must be located within the freeboard of the curtain boom.

3.3.4.5. Each curtain boom section must use a continuous piece of new, uniform, and unaltered chain for the ballast chain tension member. A tension member constructed of individual pieces of different width chain is prohibited.

3.3.4.6. The nominal chain size of the ballast chain tension member must be no larger than 3/8 in.

3.3.4.7. Each curtain boom section must be constructed with a fully enclosed pocket to house the ballast chain tension member.

3.3.4.8. The ballast chain tension member pocket must be located at the bottom of the curtain boom draft.

3.3.4.9. The ballast chain tension member pocket must be double-layered (at a minimum) to protect against abrasion.

3.3.4.10. Each ballast chain pocket must have (at a minimum) a drain hole at both ends of the curtain boom section and at the anchor point(s) to allow egress of water.

3.3.4.11. The diameter of each drain hole in the ballast chain pocket must be no less than 1 in.

3.3.5. END CONNECTORS

3.3.5.1. Both longitudinal ends of each curtain boom section must incorporate the connector and cross-pin construction defined in one of the following Standards:

a) ASTM F962-04 (2010), Standard Specification for Oil Spill Response Connection: Z-Connector; or

b) ASTM F2438-04 (2017), Standard Specification for Oil Spill Response Boom Connection: Slide Connector.

Canada will specify which type of ASTM end connector must be fitted to each curtain boom section.

3.3.5.2. Any mechanical attachment point between the curtain boom material and the end connectors must minimize stress concentrations that could result in excessive abrasion or tearing.

3.3.5.3. Each end connector must attach to the webbing top tension member using a 3/8 in, screw-pin anchor shackle consistent with 3.3.2.1, and a suitable link or ring (if required).

3.3.5.4. Each end connector must attach to the ballast chain tension member using a 3/8 in, screw-pin anchor shackle consistent with 3.3.2.1, or a bolted connection consistent with 3.3.2.2.

3.3.5.5. Each screw-pin anchor shackle used to attach a tension member to an end connector must be moused with Type 316 stainless steel wire to prevent the pin from loosening while under load.

3.3.6. ANCHOR POINTS AND WEBBING HANDLES

3.3.6.1. Each 50 ft curtain boom section must contain a minimum of one anchor point.

3.3.6.2. Each anchor point must be located equidistant from the end(s) of the curtain boom section or adjacent anchor point(s).

3.3.6.3. Each anchor point location must be indicated by a red webbing handle stitched to the top tension member above the corresponding anchor point.

3.3.6.4. Each curtain boom section must have a black webbing handle stitched to the top tension member at each fold point, provided that the fold point does not coincide with an anchor point.

3.3.6.5. The width of webbing used to construct each webbing handle must be no larger than 1 in to facilitate grasping.

3.3.6.6. Each webbing handle must be attached to the top tension member using a seam construction (i.e., seam type, width, and stitching pattern) that allows the webbing handle to support (at a minimum) 200 pounds (lb) without permanent set, tearing, or elongation.

3.3.6.7. Each end of the webbing handles must be attached to opposing sides of the top tension member pocket to ensure the carrying load is balanced on the curtain boom.

3.3.7. PERFORMANCE CRITERIA

3.3.7.1. The buoyancy to weight ratio of each curtain boom section must be a minimum of 6-to-1.

3.3.7.2. The curtain boom fabric must have the minimum mechanical properties listed in Table 1 when tested in accordance with ASTM D751-06 (2011), Standard Test Methods for Coated Fabrics.

Table 1: Minimum mechanical performance of the curtain boom fabric

Test	Warp	Fill
Grab test breaking strength (Procedure A)	450 lb_f	450 lb_f
Cut strip (1 in) test breaking strength (Procedure B)	350 lb_f/in	350 lb_f/in
Tongue tear strength (Procedure B)	100 lb_f	100 lb_f
Mullen hydrostatic resistance (Procedure A)	400 pounds per square inch (psi)	
Low-temperature crack resistance	-40°C	

3.3.7.3. The tensile strength of the webbing top tension member must be a minimum of 8,000 lb when tested in accordance with ASTM D6775-13, Standard Test Method for Breaking Strength and Elongation of Textile Webbing, Tape, and Braided Material.

3.3.7.4. The ballast chain tension members (and all chain supplied by the Contractor) must represent a minimum Grade 30 designation as per ASTM A413/A413M-07 (2012), Standard Specification for Carbon Steel Chain.

3.3.7.5. The total tensile strength of each curtain boom section must be a minimum of 10,000 lb when tested in accordance with ASTM F1093-99 (2012), Standard Test Methods for Tensile Strength Characteristics of Oil Spill Response Boom.

3.3.7.6. All tension members, attachments, fasteners, and associated hardware used in the curtain boom construction must be appropriately sized to achieve the minimum total tensile strength specified in 3.3.7.5.

3.3.8. MATERIALS OF CONSTRUCTION

3.3.8.1. All materials (including attachments, fasteners, and hardware) must be free from defects that would adversely affect the performance or maintainability of the curtain boom.

3.3.8.2. The Contractor must ensure that all elastomeric materials used in the curtain boom fabric contain 90% of the initial storage period (as defined in ISO 2230, Rubber Products - Guidelines for Storage) at the date of delivery.

3.3.8.3. The curtain boom fabric must consist of a polyester substrate and a polyvinyl chloride (PVC) topcoat.

3.3.8.4. The surface density of the curtain boom fabric must be a minimum of 22 ounces per square yard (oz/yd^2).

3.3.8.5. The colour of the curtain boom fabric must be a high visibility orange or yellow.

3.3.8.6. All integral flotation elements must be fabricated from closed-cell, polyethylene foam.

3.3.8.7. All top tension members, anchor point handles, and fold point handles must be fabricated from polyester webbing compatible with hydrocarbons.

3.3.8.8. All chain, including the ballast chain tension members, must be fabricated from a carbon steel grade conforming to one of the following Standards:

a) ASTM A510/A510M-13, Standard Specification for General Requirements for Wire Rods and Coarse Round Wire, Carbon Steel, and Alloy Steel; or

b) ASTM A576-90b (2012), Standard Specification for Steel Bars, Carbon, Hot-Wrought, Special Quality.

3.3.8.9. Any attachments including, but not limited to, shackles, rings, links, and swivels, must be fabricated from a carbon steel grade conforming to one of the following Standards:

a) ASTM A576-90b (2012), Standard Specification for Steel Bars, Carbon, Hot-Wrought, Special Quality; or

b) ASTM A909/A909M-06 (2016), Standard Specification for Steel Forgings, Microalloy, for General Industrial Use.

3.3.8.10. All carbon steel chain and attachments must be hot-dip galvanized as per ASTM A153/A153M-16a, Standard Specification for Zinc Coating (Hot-Dip) on Iron and Steel Hardware.

3.3.8.11. All end connectors must be extruded from aluminum alloy 6061-T6 as per ASTM B221-14, Standard Specification for Aluminum and Aluminum-Alloy Extruded Bars, Rods, Wire, Profiles, and Tube. The Contractor may propose suitable alternative marine-grade, aluminum alloys for consideration by Canada.

3.3.8.12. All fasteners supplied by the Contractor must be fabricated from Type 316 stainless steel as per ASTM F593-13ae1, Standard Specification for Stainless Steel Bolts, Hex Cap Screws, and Studs.

3.3.8.13. All nuts (and similar hardware) supplied by the Contractor must be fabricated from Type 316 stainless steel as per ASTM F594-09 (2015), Standard Specification for Stainless Steel Nuts.

3.3.9. FABRIC SEAMS

3.3.9.1. All curtain boom fabric seams must be radio-frequency (RF) welded. For any curtain boom section subjected to random inspection and whose fabric is cut to expose internal elements, the Contractor must identify suitable repair options for consideration, and approval or rejection by Canada.

3.3.9.2. All RF seam welds must be performed by a trained individual.

3.3.9.3. The strength of all fabric seams must be equal to or greater than the strength of the parent fabric.

3.4. CURTAIN BOOM ACCESSORY PACKAGE

3.4.1. ACCESSORY PACKAGE CONTENTS

3.4.1.1. The curtain boom accessory package must comprise the following components:

a) Four towlines;

b) Four tow paravanes;

c) Four tow bridles;

d) Five anchor kits; and

e) Five anchor lights.

3.4.1.2. Canada reserves the right to procure individual components of the curtain boom accessory package.

3.4.1.3. The Contractor should recommend any additional components to supplement those listed in 3.4.1.1.

3.4.1.4. All curtain boom accessory components must be suitable for the type and length of boom provided by the Contractor.

3.4.1.5. A detailed inventory list must accompany each provided curtain boom accessory package.

3.4.2. TOWLINES

3.4.2.1. Each towline must be 100 ft (+1 ft, -0 ft) in length.

3.4.2.2. The tensile strength of each towline must be a minimum of 7,500 lbs.

3.4.2.3. The diameter of each towline must be no larger than 0.75 in.

3.4.2.4. Each towline must be fabricated from twisted polymer rope. Nylon rope is unacceptable for this application due to its propensity for elongation.

3.4.2.5. One end of each towline must contain an eye splice that tightly encloses a galvanized or Type 316 stainless steel thimble.

3.4.2.6. The eye splice construction must withstand 90% of the minimum nominal tensile strength specified in 3.4.2.2.

3.4.2.7. The steel thimble must be compatible with the size of supplied twisted polymer rope.

3.4.2.8. The bitter end of each towline (or any exposed polymer rope end) must be completely heat sealed to prevent exposed rope strands or fibres.

3.4.3. TOW PARAVANES

3.4.3.1. Each tow paravane must ensure that the curtain boom maintains a vertical attitude under tow.

3.4.3.2. Each tow paravane must be constructed from one of the following aluminum alloys:

a) 5086-H116, as per ASTM B928/B928M-15, Standard Specification for High Magnesium Aluminum-Alloy Products for Marine Service and Similar Environments; or

b) 6061-T6, as per ASTM B209-14, Standard Specification for Aluminum and Aluminum-Alloy Sheet and Plate; or

c) Another suitable alternative marine-grade, aluminum alloy if approved by the Technical Authority.

3.4.3.3. Each tow paravane must employ a robust, integral cylindrical or conical float for floatation.

3.4.3.4. One end connector (as specified in 3.3.5.1) must be securely attached to each tow paravane.

3.4.3.5. The end connector must be located opposite of the towing end of the tow paravane.

3.4.3.6. The end connector must be extruded from aluminum (as specified in 3.3.8.11).

3.4.3.7. The end connector must be configured such that the curtain boom retains its original freeboard while under tow.

3.4.3.8. The towing end of each tow paravane must be fitted with one or more, 3/4 in, galvanized steel, screw-pin anchor shackles.

3.4.3.9. The attachment point(s) of the galvanized steel, screw-pin anchor shackle(s) must ensure that towing forces are evenly distributed on the curtain boom.

3.4.3.10. All attachments and hardware fitted to the tow paravane must withstand the minimum tensile strength specified in 3.4.2.2.

3.4.4. TOW BRIDLES

3.4.4.1. Each tow bridle must be fabricated from galvanized steel rope as per ASTM A1023/A1023M-15, Standard Specification for Stranded Carbon Steel Wire Ropes for General Purposes.

3.4.4.2. Each leg of the tow bridle and its lead end must be fitted with a galvanized or Type 316 stainless steel thimble and ferrule.

3.4.4.3. Each tow bridle leg must be securely attached to the end connector specified in 3.3.5.1 (e.g., using 3/8 in, galvanized steel, screw-pin anchor shackles, or a Type 316, bolted connection consistent with 3.3.2.2).

3.4.4.4. The lead end of the tow bridle must be fitted with a 3/4 in, galvanized steel, screw-pin anchor shackle.

3.4.4.5. Each tow bridle (including all associated attachments and hardware) must withstand the minimum tensile strength specified in 3.4.2.2.

3.4.4.6. Each tow bridle must be constructed to evenly distribute the towing forces amongst the legs.

3.4.5. ANCHOR KITS

3.4.5.1. Each anchor kit must comprise the following components:

a) Five, fluke-style, patent anchors;

b) Five, rope-chain, anchor rodes; and

c) Five, anchor trip lines and buoys.

3.4.5.2. Each fluke-style, patent anchor must be fabricated from a suitable structural grade of carbon steel and hot-dip galvanized as per ASTM A153/A153M-16a, Standard Specification for Zinc Coating (Hot-Dip) on Iron and Steel Hardware.

3.4.5.3. The minimum cumulative holding power of the five fluke-style, patent anchors must be sufficient to keep the length of curtain boom specified in 3.3.1.1 in a fixed position (given the water body type specified in 3.1.1.5 and a silt bed).

3.4.5.4. Each supplied fluke-style, patent anchors must be of identical size and mass.

3.4.5.5. The crown of each fluke-style, patent anchor must be fitted with a 3/8 in, galvanized steel, screw-pin anchor shackle to facilitate the attachment of an anchor trip line.

3.4.5.6. Each anchor rode must comprise a 20 ft (+1 ft, -0 ft) length of galvanized steel chain attached to a 100 ft (+1 ft, -0 ft) length of twisted polymer rope. Nylon rope is unacceptable for this application due to its propensity for elongation

3.4.5.7. The nominal chain size of each chain anchor rode must be no larger than 3/8 in.

3.4.5.8. The diameter of each rope anchor rode must be no larger than 0.75 in.

3.4.5.9. One end of each rope anchor rode must contain an eye splice that tightly encloses a galvanized or Type 316 stainless steel thimble.

3.4.5.10. The steel thimble must be compatible with the size of supplied twisted polymer rope.

3.4.5.11. The bitter end of each rope anchor rode (or any exposed polymer rope end) must be completely heat sealed to prevent exposed rope strands or fibres.

3.4.5.12. The rope anchor rode must be attached to the chain anchor rode using a 3/8 in, galvanized steel, screw-pin anchor shackle.

3.4.5.13. The chain anchor rode must be attached to the shank of the fluke-style, patent anchor using a 3/8 in, galvanized steel, screw-pin anchor shackle.

3.4.5.14. Each shackle pin used in the anchor rode assembly must be moused with Type 316 stainless steel wire to prevent it from loosening while under load.

3.4.5.15. The tensile strength of each anchor rode assembly must be the minimum tensile strength that coincides with the holding power of one supplied fluke-style, patent anchor.

3.4.5.16. Each anchor trip line must be 100 ft (+1 ft, -0 ft) in length.

3.4.5.17. The tensile strength of each anchor trip line must be a minimum of 2,000 lb.

3.4.5.18. The diameter of each anchor trip line must be no larger than 0.5 in.

3.4.5.19. Each anchor trip line must be fabricated from twisted polymer rope. Nylon rope is unacceptable for this application due to its propensity for elongation

3.4.5.20. One end of the anchor trip line must contain a spliced eye (with no thimble).

3.4.5.21. The eye splice construction must withstand 90% of the minimum nominal tensile strength specified in 3.4.5.17.

3.4.5.22. Each anchor trip line must be fitted with an inflatable, low-drag buoy.

3.4.5.23. The inflatable, low-drag buoys must be of a rugged construction to resist accidental puncture.

3.4.5.24. The buoyancy of the inflatable, low-drag buoys must be a minimum of 50 lbs.

3.4.5.25. The inflatable, low-drag buoys must be fabricated from an oil compatible polymer.

3.4.5.26. The colour of the inflatable, low-drag buoys must be a high visibility orange or yellow.

3.4.5.27. The Contractor must provide an air pump and any other tools required to inflate the low-drag buoys with each curtain boom package delivery.

3.4.6. ANCHOR LIGHTS

3.4.6.1. Each anchor light must use a 360 degree, flashing white, light-emitting diode (LED).

3.4.6.2. Each anchor light must be battery-operated. Each anchor light must be fitted with a manually operated switch to toggle the light on and off.

3.4.6.3. The visibility range of each anchor light must be a minimum of 1 nautical mile (nm).

3.4.6.4. The run time of each anchor light must be a minimum of 40 hours (hr) before charging or replacing the battery is required.

3.5. STORAGE CONTAINER

3.5.1. PHYSICAL CONSTRUCTION

3.5.1.1. Any storage container supplied by the Contractor must be an off-the-shelf item and conform to the minimum internal dimensions and actual external dimensions (and tolerances) listed in Table 2. Canada reserves the right to specify which size or designation of storage container (if any) will accompany each curtain boom and accessory package delivery.

Table 2: Storage container dimensions

Container designation	Dimension	Length	Width	Height
Type 1CC	Interior (minimum)	230.98 in (5,867 mm)	91.73 in (2,330 mm)	92.52 in (2,350 mm)
	Exterior	238.5 in (+0, -1/4 in) (6,058 mm (+0, -6 mm))	96 in (+0, -3/16 in) (2,438 mm (+0, -5 mm))	102 in (+0, -3/16 in) (2,591 mm (+0, -5 mm))
Type 1D	Interior (minimum)	110.32 in (2,802 mm)	91.73 in (2,330 mm)	92.52 in (2,350 mm)
	Exterior	117.75 in (+0, -3/16 in) (2,991 mm (+0, -6 mm))	96 in (+0, -3/16 in) (2,438 mm (+0, -5 mm))	102 in (+0, -3/16 in) (2,591 mm (+0, -5 mm))

3.5.1.2. All other dimensions, tolerances, and ratings for the storage container must satisfy the requirements for a Type 1CC or Type 1D container as per ISO 668:2013, Series 1 Freight Containers – Classification, Dimensions, and Ratings.

3.5.1.3. Unless otherwise specified herein, the storage container must satisfy the requirements for a Type 1CC or Type 1D container as per ISO 1496-1:2013, Series 1 Freight Containers – Specification and Testing Standards.

3.5.1.4. All corner fittings attached to the storage container must conform to the requirements defined in ISO 1161:2016, Series 1 Freight Containers – Corner and Intermediate Fittings – Specifications.

3.5.1.5. The storage container must be constructed to minimize recesses and voids where moisture can accumulate.

3.5.1.6. The roof of the storage container must be self-draining.

3.5.2. DOORS

3.5.2.1. The storage container must be constructed with hinged, double-wing doors at both the front and rear end frames.

3.5.2.2. A gasket must be mechanically attached to each door to provide a weathertight seal.

3.5.2.3. Each door must be fitted with two exterior, handle-operated, locking gear cams and keeps, which (through lever type action) aid in releasing the door seal from the door frame.

3.5.2.4. Each door locking device handle must accept a padlock with a 7/16 in shackle diameter.

3.5.2.5. Each door must be fitted with provisions to hold and secure it in the full open position.

3.5.2.6. The provisions used to secure each door must be fabricated from a material that will not scrape or chafe the container when the doors are closed.

3.5.2.7. All moving parts of the door locking mechanism must be permanently lubricated.

3.5.2.8. Each door must open approximately 270 degrees to facilitate loading and unloading.

3.5.3. FORKLIFT POCKETS

3.5.3.1. The storage container must be fitted with two enclosed forklift pockets.

3.5.3.2. Each forklift pocket must pass completely through the base structure of the storage container.

3.5.3.3. The size and spacing of the forklift pockets must satisfy the dimensional requirements defined in ISO 1496-1:2013, Series 1 Freight Containers – Specification and Testing Standards.

3.5.4. VENTILATION

3.5.4.1. The storage container must be fitted with a minimum of two, off-the-shelf passive vents. Canada reserves the right to review, and accept or reject the vent sizing proposed by the Contractor.

3.5.4.2. The passive vents must be located in the upper diagonal corners on opposite walls or doors, such that they provide maximum diagonal cross airflow and exhaust.

3.5.4.3. The passive vents must be designed to deflect rain or spray, and prevent water ingress.

3.5.5. MATERIALS OF CONSTRUCTION

3.5.5.1. The storage container must be fabricated from materials that are inherently corrosion resistant and aligned with or typical of industry best practices. Table 3 summarizes typical material candidates for the main components of the storage container.

Table 3: Storage container materials of construction

Component(s)	Material(s)
Roof, door, side, and front panels Door headers, frames, and sills Cross members Side, end, and centre rails Rails Corner posts Forklift pocket plates	Anti-corrosive steel: CORTEN A, SPA-H, B480, or equivalent
Door locking bars	Structural steel round pipe: STK41
Corner fittings	Casted weldable steel: SCW480
Locking gear cams and keepers	Forged welded steel: S20C
Door hinge pins and gasket retainers	Type 304 stainless steel
Door gasket	Ethylene propylene diene monomer (EPDM) rubber
Floor boards	19-ply, hardwood plywood
Ventilator	Acrylonitrile butadiene styrene (ABS) resin, labyrinth type

3.5.6. HOISTING SLING AND HARDWARE

3.5.6.1. The Contractor must supply a four-leg bridle sling for the storage container (complete with all attachments and hardware) to facilitate lifting from a single, overhead point.

3.5.6.2. Unless otherwise specified by Canada, all supplied rigging equipment (i.e., four-leg bridle sling, attachments, and hardware) must conform to the requirements defined in the following Standards:

a) SOR/2007 128, Cargo, Fumigation, and Tackle Regulations;

b) ASME B30.26-2015: Rigging Hardware; and

c) ASME B30.9-2014: Slings.

3.5.6.3. Any shackles used in the rigging and hoisting of the storage container must conform to the requirements prescribed for Type IVA, Class 3, Grade A shackles (i.e., bolt, nut, and cotter anchor shackles) in RR-C-271F, Chains and Attachments, Carbon and Alloy Steel.

3.5.6.4. The supplied sling set must be permanently marked with the load rating and date of load testing.

3.6. LABELLING AND MARKINGS

3.6.1. PRODUCT IDENTIFIERS

3.6.1.1. The Contractor must clearly label the following components with a product identifier:

a) Each 50 ft section of curtain boom; the

b) Curtain boom accessory package; and the

c) Storage container.

3.6.1.2. Each product identifier must be permanently applied or affixed to its respective component in a readily visible location.

3.6.1.3. Each product identifier must use alphanumeric characters to indicate the name of the manufacturer, date of manufacture, and manufacturer serial number.

3.6.1.4. The alphanumeric characters on a product identifier must be between 1 cm and 2 cm in height, and contain no spaces between the individual elements that compose the identifier.

3.6.1.5. All text on the product identifier must be a sans serif typeface.

3.6.1.6. The first element of a product identifier (i.e., the manufacturer name) must be four uppercase letters that best represent the name of the manufacturer. Canada reserves the right to review, and accept or reject the first element proposed by the Contractor for self-identification.

3.6.1.7. The second element of a product identifier (i.e., the date of manufacture) must be eight numeric digits that correspond to the following format: DDMMYYY (where DD represents the two-digit day, MM represents the two-digit month, and YYYY represents the four-digit year).

3.6.1.8. The last element of a product identifier (i.e., the manufacturer serial number) must coincide with the full, alphanumeric serial number assigned by the manufacturer.

3.6.2. STORAGE CONTAINER MARKINGS

3.6.2.1. The Contractor must meet the requirements identified in Appendix 2 – Storage Container Markings.

3.6.3. INSTRUCTION PLACARDS

3.6.3.1. The Equipment Instruction Illustration for deploying the curtain boom package (including appropriate colour pictograms or illustrations) must be printed on a plasticized sheet.

3.6.3.2. The Equipment Instruction Illustration for deploying the curtain boom package must be affixed to the inside of the front storage container doors.

3.6.3.3. Equipment Instruction Illustration for the curtain boom package must be written in both Canadian English and Canadian French.

3.6.3.4. The Equipment Instruction Illustration for deploying the curtain boom package must occupy a minimum area of one quarter of the total area of one front container door.

3.6.3.5. The Equipment Instruction Illustration for deploying the curtain boom package must be located within the upper half of the front container doors.

3.6.3.6. The method for fixing the Equipment Instruction Illustration to the door must allow them to be temporarily removed and replaced for training purposes.

3.7. SHIPPING AND DELIVERY

3.7.1. GENERAL REQUIREMENTS

3.7.1.1. All curtain boom supplied by the Contractor must be delivered on 48 in × 48 in wooden shipping pallets.

3.7.1.2. Each 50 foot section of curtain boom must be flaked and secured with a minimum of two cotton cords.

3.7.1.3. No more than five, 50 foot curtain boom sections must be placed onto a single shipping pallet.

3.7.1.4. Each shipping pallet must be stretch wrapped to unitize its load.

3.7.1.5. All curtain boom accessory package components must be appropriately bundled (e.g., tied or strapped) to facilitate handling.

3.7.1.6. All curtain boom accessory package components must be bundled on a single shipping pallet and stretch wrapped.

3.7.2. STORAGE CONTAINER REQUIREMENTS

3.7.2.1. Each storage container must include a minimum of ten, 50 foot curtain boom sections loaded into the supplied storage container.

3.7.2.2. All curtain boom loaded into the storage container must be flaked in a vertical orientation. A vertical orientation corresponds to the axis of each floatation element being perpendicular to the floor of the storage container or any horizontal plane.

3.7.2.3. All curtain boom loaded into the storage container must be connected in one continuous run (complete with tow ends and tow lines) for immediate deployment.

3.7.2.4. The remaining sections of curtain boom supplied by the Contractor must be delivered on wooden shipping pallets as per the applicable requirements in 3.7.1.

3.7.2.5. All curtain boom accessory package components must be delivered in the supplied storage container. All curtain boom accessory package components must be appropriately bundled (e.g., tied or strapped) to facilitate handling.

3.7.2.6. Where appropriate, cushioning materials, dunnage, block, and bracing must be applied to all items delivered in the storage container to restrict their movement during transit and prevent physical damage.

APPENDIX 1 CCG WELDING STANDARD

EKME#3049715v4
(CT-043-EQ-EG-001-E)

Welding Specification

SALUTI PRIMUM AUXILIO SEMPER

Canadian Coast Guard

August 2017

Canada

Published under the Authority of:
Integrated Technical Services Directorate
Fisheries and Oceans Canada
Canadian Coast Guard
Ottawa, Ontario
K1A 0E6
Disponible en français :**Norme de soudage des métaux ferreux** First Edition – - March 2014
Available on CCG Intranet site at: http://ccg-gcc.ncr.dfo-mpo.gc.ca

Record of Amendments

#	Date	Description	Initials
1	April 2014	approved by DG.	
2	January 2016	Corrections made to some of the references herein, to section 5	CG
3	August 2017	CWB and NDT audit requirements, Clauses 5.6.1 and 5.6.2 Quantity of NDT required for New Construction, Clause 5.6.5.2 Undercut Acceptance Criterion, Clauses 5.6.9.2 and 5.6.10.2 Third Party Weld Inspection Requirement, Clause 5.6	L.P

Approvals

Office of Primary Interest (OPI)	Tracey Clarke	Approved: Date:	2014-APRIL-10
Manager, Engineering and Maintenance Hull/ Mechanical/ Electrical	Anne Marie Sekerka	Approved: Date:	2014-APRIL-10
Director, Marine Engineering Services (ITS)	Gary Ivany	Approved: Date:	2014-APRIL-10
Clifford Harvey Director, Marine Engineering	Approval for amendment number 3, made in August 2017 August 23, 2017		
Director General, Integrated Technical Services	Michel Cecire	Approved: Amendments	2014-APRIL-11
Sam Ryan, Director General, Integrated Technical Services	Approval for amendment number 3, made in August 2017 August 23, 2017		

CONTENTS

List of Tables

List of Figures

Foreword

This Specification has been prepared by Marine Engineering, Integrated Technical Services (ITS), Canadian Coast Guard, Fisheries and Oceans Canada, Ottawa.

The purpose of this Specification is stated in Chapter 1.0, Scope.

When, this Specification is used other than as stated in the Scope, it shall remain the responsibility of the user to judge its suitability for their particular purpose.

Section 1 SCOPE

This Specification establishes the requirements of Marine Engineering, Integrated Technical Services, Canadian Coast Guard, Fisheries and Oceans Canada, Ottawa.

This Specification shall be followed whenever required by contract.

This Specification details the requirements for welding and non-destructive inspection of welds for structural steel, aluminum and stainless steel and the wide variety of other materials used for installation of pressure piping, pressure vessels and pressure containment systems and, shipboard equipment.

This Specification is intended as an Owner's requirement. In addition to this Specification, the Contractor shall meet all regulations and rules required by Transport Canada Marine Safety and Security and, the governing Classification Society as applicable.

When the above mentioned rules exceed the requirements specified herein, the more stringent requirement shall take precedence.

Section 2 DEFINITIONS & ABBREVIATIONS

The following definitions and abbreviations apply in this Specification:

Approved (approval)	means reviewed and accepted by the Delegated Representative of the Director, Marine Engineering, unless otherwise specified.
Contractor	means the company to which a contract has been awarded by the Owner.
CWB	means the Canadian Welding Bureau.
Delegated Representative	means the individual that has been assigned the authority to represent the Director, Marine Engineering regarding matters related to the requirements of this Specification, as applied to a specific contract.
Engineer (in the referenced standards)	means the Delegated Representative.
Examination, Inspection, Testing	the act of looking at something closely, by either destructive or non-destructive methods, in order to learn more about it, to determine acceptance or rejection to a defined criterion, to locate problems.
Owner	means, in the context of this Specification as applied to a given contract, Marine Engineering, Integrated Technical Services (ITS), Canadian Coast Guard, Fisheries and Oceans Canada, Ottawa.
Pressure Piping	means any piping used to convey a fluid at a pressure above atmospheric pressure, unless otherwise stated.
Provincial Pressure Vessel Authority	means the organizations legislated by the Provinces of Canada to provide oversight for welding pressure piping, pressure vessels and pressure containment systems.
Structure (s) or Structural	means primary hull structure and secondary structure.
Structure, Primary Hull	means that part of the vessel hull structure which makes up the primary hull girder, including structure to resist ice loadings. It consists of strength decks, platforms and shell plating and their supporting framing, tank top, vertical keel, longitudinal and main transverse bulkheads. In addition to the primary hull girder, water, oil and gas tight bulkheads shall be considered part of the primary hull structure.
Structure, Secondary	means all of the vessel structure which is not included in the definition for primary hull structure.
Sub-Contractor	means the company to which a contract has been awarded by the Contractor.

Section 3 APPLICABLE DOCUMENTS

The Contractor or Sub-Contractor performing welding or inspection of welds shall be familiar with the applicable Codes, Standards, Rules and Publications referred to within this Specification (See Annex "A").

Use of the above-mentioned references shall be the latest edition approved by the organization issuing the publication specified at the time of contract award.

Except as noted in Chapter 1, when the requirements of other publications are in conflict with the requirements specified herein, the Delegated Representative shall be requested to establish precedence.

Section 4 ADMINISTRATION

This Specification shall be administered by the Director, Marine Engineering, Integrated Technical Services, Canadian Coast Guard, Fisheries and Oceans Canada, Ottawa.

For the purpose of administration, the Director, Marine Engineering shall delegate representatives that shall be responsible for measuring the Contractor's performance and ability to meet the requirements specified herein.

The Contractor shall allow the Delegated Representatives access to the facilities, files and records relative to the requirements of this Specification for the duration of the contract and warranty period.

The documentation that is to be made available to the Delegated Representatives shall include, but not necessarily be limited to, personnel qualification records, welding specifications and weld procedure data sheets, certification records, visual and non-destructive inspection results, quality control and quality assurance manuals and reports, and other associated documents.

Section 5 WELDING STRUCTURES

5.1 CONTRACTOR REQUIREMENTS

5.1.1 Steel Structures

All welding contractors shall be certified by the CWB to CSA Standard W47.1 Division 1 or 2 for new construction and work packages other than new construction.

5.1.2 Aluminum Structures

All welding contractors shall be certified by the CWB to CSA Standard W47.2 Division 1 or 2 for new construction and work packages other than new construction.

5.1.3 Welding Procedures

All welding procedure specifications and/or welding procedure data sheets shall be reviewed and approved by the CWB prior to use.

5.1.4 Welding Personnel

All welding personnel shall be approved by the CWB prior to their commencing any welding work

5.1.5 Performance and Qualification Testing

All performance and procedure qualification testing shall be fully witnessed and documented by the CWB.

5.1.6 Limitations Prior to Commencing Welding Work

All Contractors shall submit their welding personnel qualification records and approved welding procedures to the Delegated Representative prior to commencing any welding work.

All welding procedures, including welding procedure specifications and welding procedure data sheets, shall include an indication of acceptance by the Contractor (by signature, seal or other appropriate means) and a stamp of acceptance by the CWB.

5.1.7 Governing Standards for Welding

For structural steels $\geq$ 3 mm in thickness, welding shall meet the requirements of CSA Standards W47.1 and W59, except as modified by this Specification.

For structural aluminum $\geq$ 3 mm in thickness, welding shall meet the requirements of CSA Standards W47.2 and W59.2, except as modified by this Specification.

5.2 WELD DESIGN

Weld design shall be to the Rules of a Classification Society that is an approved Recognized Organization by Transport Canada Marine Safety and Security. Unless otherwise approved by the Delegated Representative, the following conditions shall be met:

- all groove welds in butt joints shall be full penetration; and,
- all corner joints shall be full penetration groove welds combined with single continuous fillet weld

A weld design schedule shall be submitted to the Delegated Representative in drawing form for review prior to commencing any welding work.

5.3 SYMBOLS FOR WELDING

Design drawings shall include weld requirement symbols and construction drawings shall include welding symbols following the requirements of CSA Standards W59 and W59.2. For fillet welds, the drawings shall indicate if the weld dimension shown in the symbol is throat size or leg length.

5.4 WELDING CONSUMABLES

This Section provides contractors means to quickly finding the information required to match welding consumables to the various grades of steel and aluminum materials used for shipbuilding and repair. For steel, cross reference is made between CSA welding consumable and shipbuilding material designations.

This Section also guides the contractor in the selection of corrosion resistant welding consumables for ships built of atmospheric corrosion resistant steels and for welds located in the external shell envelope of ice transiting ships. For welding processes other than those listed herein, consult the governing standards referenced in Chapter 5.1, Section 5.1.7 of this specification.

5.4.1 Steel

5.4.1.1 Electrode and Consumable Selection

Electrodes and consumables for welding processes shall be selected on the basis of retained hydrogen, mechanical properties (UTS, YS, elongation and toughness) and resistance to corrosion in sea water.

Generally, the requirements of Tables 5.1- 5.5 inclusive shall apply involving use of steels having a yield stress below 360 MPa (N/mm²) and charpy-v-notch toughness requirements at test temperatures above -45°C.

For other materials or conditions, welding electrodes and consumables shall be selected in accordance with the requirements of the following Sections of this Specification:

- Section 5.4.1.8 for higher strength notch tough steels;
- Section 5.4.1.9 for atmospheric corrosion resistant steels;
- Section 5.4.1.10 for Shell Butts & Seams – Ice Transiting Steel Ships

Welding electrodes and consumables for welding steel shall be certified by the CWB to the requirements of CSA Standard W48 or the applicable AWS A5 series of standards.

When two different grades of material of the same tensile strength properties are being joined by welding and corrosion resistance is not a consideration, electrodes and consumables for the lower grade is generally acceptable. Similarly, when joining materials with differing tensile strength properties, electrodes and consumables are to be suitable for the tensile strength of the component on which the weld size (e.g. fillet weld) has been determined.

Care shall be taken not to overmatch weld metal mechanical properties.

5.4.1.2 Storage and Handling

Storage and handling of welding consumables, electrodes and fluxes shall be in accordance with the requirements of CSA Standard W59.

5.4.1.3 Low or Controlled Hydrogen Electrode Requirements

In addition to other factors that must be considered for matching weld metal deposits to various grades of base materials, welding processes and their respective welding electrodes and consumables produce varying amounts of hydrogen gas which may be retained in the deposited weld metal.

Although the amount of retained hydrogen may be reduced by increasing preheat temperatures, low and controlled hydrogen electrodes and consumables shall be required in accordance with Table 5.1.

Table 5.1 Selection of Low or Controlled Hydrogen Electrodes

Mandatory Use of Low & Controlled Hydrogen Electrodes		Other thanLow Hydrogen Electrodes (1)	
Material Grade	**Material Thickness**	**Material Grade**	**Material Thickness**
Gr. A Gr. E Gr. AH 32, 34 36 Gr. DH 32, 34, 36 Gr. EH 32, 34,36 Gr. FH 32, 36,40 Gr. FH 42 - 69	(t) ≥ 19 mm All Thicknesses	Gr. A	(t) ≤ 19 mm
Where (t) is the thickest member		**Where (t) is the thickest member**	

Note: (1) Independent of the material grade specified, when the carbon equivalent (CE) of the material exceeds 0.40 where the carbon equivalent is calculated from the ladle analysis as follows:

$$CE = \frac{Mn}{6} + \frac{Cr + Mo + V}{5} + \frac{Ni + Cu}{15}$$

Basic or controlled hydrogen electrodes are required.

When the grades of base metals requiring low or controlled hydrogen electrodes and consumables are produced using thermo-mechanical controlled rolling practice, the Contractor may apply to the Delegated Representative for exemption from mandatory requirements listed in Table 5.1. Exemption will only be granted after due consideration of susceptibility to hydrogen assisted or induced cold cracking.

5.4.1.4 Shielded Metal Arc Welding (SMAW)

Welding electrodes for shielded metal arc welding normal and higher strength shipbuilding grade steels shall be selected following the requirements of Table 5.2.

Table 5.2 Selection of Welding Electrodes for Shielded Metal Arc Welding

Material Grade	CSA W48 Electrode
Grade A	E4300, 10, 11, 13, 27 (2) E4914, 24 (2) E4918, 28,48 (1)
Grade E	E4918-1 (1)
Grades AH32, 34, 36 DH32, 34, 36	E4918, 28, 48 (1)
Grades EH32, 34, 36	E4918-1 (1)
Grades EH40 FH-XX XX-40-69	 See Section 5.4.1.8 herein

NOTE: (1) As required in Table 5.1; (2) Restricted use as detailed in Table 5.1

5.4.1.5 Submerged Arc Welding (SAW)

Wire electrode-flux combinations for submerged arc welding normal and higher strength shipbuilding grade steels shall be selected following the requirements of Table 5.3.

Table 5.3 Selection of Wire Electrodes and Flux for Submerged Arc Welding

Base Material	CSA W48	
Grade	**Flux (1)**	**Electrodes**
Grade A	F43A1-XXXX F49A1-XXXX	XXXX-EL12 XXXX-EM12K
Grades E	F49A4-XXXX F49A5-XXXX	XXXX-EM12K XXXX-EM13K
Grades AH32, 34, 36 DH32, 34, 36	F49A1-XXXX F49A2-XXXX	XXXX-EM12K XXXX-EM13K
Grades EH32, 34, 36	F49A4-XXXX F49A5-XXXX	XXXX-EM12K XXXX-EM13K
Grades EH40 FH-XX XX-40-69	See Section 5.4.1.8 herein.	See Section 5.4.1.8 herein.

Note: (1) Neutral flux only for shell plate groove welds.

5.4.1.6 Flux Cored and Metal Cored Arc Welding (FCAW & MCAW)

Wire electrodes for flux cored arc welding and metal cored arc welding normal and higher strength shipbuilding grade steels shall be selected following the requirements of Table 5.4. Shielding gas type shall be in accordance with approved weld procedure data sheets for the wire electrode selected.

Table 5.4 Selection of Wire Electrodes for Flux Cored and Metal Cored Arc Welding

Base Materials	Wire Electrode					
Grade	**CSA W48**					
Grade A	E49X **See Note #2** E49X **See Note #2**	T C	-1 (M) -5 (M) -6 (M) -8 -9 (M) -12 (M) -3 (M) -6 (M)	E490X **See Note #2** E49X **See Note #2**	T C	-G (1) GS (1) -4 (1) -7 (1) -10 (1) -11(1) -G (1)
Grades AH 32, 36 DH 32, 36	E49X **See Note #3** E49X **See Note #3**	T C	-1 (M) -5 (M) -6 -3 (M) -6 (M)	E49X **See Note #3** E49X **See Note #3**	T C	-8 -9 (M) -12 (M) -G1
Grades E EH 32, 36	E49X-T-X(X)-J, E49X-C-X(X)-J **See Notes #3 & 4** E49X-T-X(X)-J, E49X-C-X(X)-J **See Notes #3 & 4** E55X-T-X(X)-J, E55X-C-X(X)-J **See Notes #3 & 4**					
EH40 FH-XX XX-40-69	No pre-approved consumables. See Section 5.3.2.8 herein. Qualification Tests are required using the shielding gas type planned for production.					

1. Submit for approval;
2. H16 designation for the thicknesses required by Table 5.1
3. H16 designation for all thicknesses.
4. Must carry "J" designation, average impact energy of 27 j @ -40

5.4.1.7 Gas Metal Arc Welding (GMAW)

Wire electrodes for gas metal arc welding normal and higher strength shipbuilding grade steels shall be selected following the requirements of Table 5.5. Shielding gas type shall be in accordance with the approved weld procedure data sheets for the wire electrode selected.

Table 5.5 Selection of Wire Electrodes for Gas Metal Arc Welding

Base Materials	Wire Electrodes
Marine Grade	**CSA W48:06 CAN/ISO 14341:06**
Grade A t ≤ 19 mm…… t > 19 mm……	 ISO 14341-B-G-49A-X-X-XX ISO 14341-B-G-49A-2-X-XX ISO 14341-B-G-49A-3-X-XX
Grade E	ISO 14341-B-G-49A-4-X-XX ISO 14341-B-G-49A-5-X-XX ISO 14341-B-G-49A-6-X-XX
Grades AH 32, 36 & DH 32, 36 EH 32, 36	 ISO 14341-B-G-49A-2-X-XX ISO 14341-B-G-49A-3-X-XX ISO 14341-B-G-49A-4-X-XX ISO 14341-B-G-49A-5-X-XX ISO 14341-B-G-49A-6-X-XX ISO 14341-B-G-55A-4-X-XX ISO 14341-B-G-55A-5-X-XX ISO 14341-B-G-55A-6-X-XX
Grades : EH40 FH-XX XX-40-69	No pre-approved consumables. Section 5.4.1.8 herein. Qualification Tests are required using the shielding gas type planned for production

Wire electrodes approved by the yield strength and average impact values of 47 J, the “A” suffix method, shall be submitted to the Delegated Representative for review and acceptance. Weld procedure qualification testing is required.

5.4.1.8 Electrodes for Higher Strength Notch Tough Steels

Welding electrodes and consumables for joining normal and high strength shipbuilding grade steels that have been manufactured using the thermo-mechanical controlled rolling practice method shall be approved by a series of weld procedure qualification tests.

Welding electrodes and consumables for joining shipbuilding steel grades FH-XX and XX-40 through XX-69 inclusive shall also be approved by a series of weld procedure qualification tests.

As a minimum, welding electrodes and consumables shall match the base metal strength (UTS, YS and elongation) and notch toughness properties at the base metal test temperature.

To qualify welding electrodes and consumables, a series of weld procedure qualification tests shall be performed in each position of welding using joint configurations typical of that intended for production. For each of the test conditions, two welds shall be made; one test each at the minimum and maximum anticipated heat inputs (kj/mm) planned for production welding.

Assemblages, type of tests and specimens shall be in accordance with CSA Standard W47.1. Each procedure qualification test shall be supplemented with 15 charpy-v-notch specimens; 5 specimens with the "v" notch located at the centre of the joint, 5 specimens with the "v" notch intersecting the line of fusion and 5 specimens with the "v" notch located 5 mm from the fusion line (HAZ). Charpy-v-

notch specimens shall be tested in accordance with the requirements of CSA Standard W47.1 at test temperatures equivalent to that of the base metal classification (ie. E & EH @ -40°C, FH @ -60°C, etc). The minimum acceptance requirements for each test method shall be those requirements of the test specification under which the base metal was qualified.

5.4.1.9 Electrodes for Atmospheric Corrosion Resistant Steels

Welding electrodes and consumables for joining atmospheric corrosion resistant steels such as CSA Standard G40.21 grades 350A, 350AT, 400A and 400AT including ASTM grades A242 and A588 steels shall be carefully selected to match the copper and nickel content of the base plate and the ultimate and yield strength, elongation and toughness properties. Close attention shall be paid to matching all of the chemical elements that prevent corrosion in sea water.

Butts and seams in the shell, weather decks and all welds in uncoated ballast tanks shall be performed with welding electrodes and consumables that are proven to be resistant to weld zone (weld deposit and HAZ) corrosion in accordance with the requirements of Section 5.4.1.10 herein. These requirements also apply to weld repair of scars in shell plating caused by removal of temporary attachments and permanent markings made by welding. There are no pre-approved corrosion resistant weld metal deposits for welding atmospheric corrosion resistant steels. For welds in other locations of primary and secondary structure, electrodes and consumables may be selected and matched in accordance with the requirements of CSA Standard W59.

5.4.1.10 Shell Butts & Seams – Ice Transiting Steel Ships

The finishing layers of shell butts and seams located on the sea water side of ice-transiting ships shall be performed with welding electrodes and consumables that are proven to be resistant to weld zone (weld deposit and HAZ) corrosion in accordance with the requirements of this Section.

For shielded metal arc welding, E5518-C3 is approved for use without testing. There are no other pre-approved corrosion resistant consumables for any welding process.

Once the Contractor has matched a welding electrode and consumable to the minimum base plate mechanical property requirements of this Specification; coupons shall be prepared, welded and tested for corrosion resistance in sea water by conducting anodic dissolution tests as outlined in Annex “B” of this Specification. Two weld coupons shall be made for each weld metal/base metal combination; one test each at the anticipated minimum and maximum heat inputs (kj/mm) planned for production welding. Welding bead sequence for these tests must employ a stringer temper bead technique as illustrated in Annex B of this Specification. No weaving is permitted.

The target acceptance criterion sought is near equivalent loss of the base plate, heat affected zone and weld metal deposit. Since this may not always be accomplished for all grades of base metal, slight loss of weld metal is desired over any loss in the heat affected zone. Anodic dissolution test results shall be tabulated and submitted to the Delegated Representative for approval.

For finishing layers of welds located on the external shell plating of ice transiting ships, a temper bead approach shall be employed similar to what is illustrated in Figure 5.1.

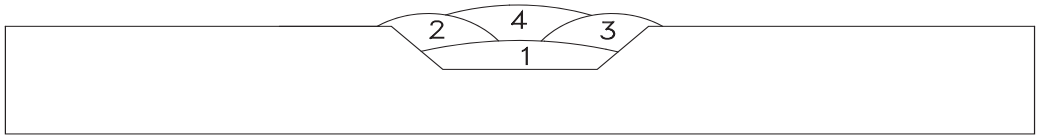

Figure 5.1 Temper Bead Approach for Finishing Layers in Shell Plating

The first layer of corrosion resistance weld metal shall be deposited 5 mm below the plate surface.

5.4.2 Aluminum

5.4.2.1 Electrode and Consumable Selection

Welding electrodes, rods and consumables shall be matched to the base metal in accordance with the requirements of CSA Standard W59.2. All welding electrodes, rods and consumables shall be certified by the CWB to the requirements of AWS A5.10.

5.4.2.2 Storage and Handling

Storage and handling of welding electrodes, rods and consumables shall be in accordance with the requirements of CSA Standard W59.2.

5.5 WORKMANSHIP

5.5.1 Environment

The work being welded shall be adequately protected against the direct effects of wind, rain and snow throughout the welding operation.

Welding steel at ambient temperatures below -18°C requires approval in accordance with CSA Standard W59. Aluminum welding shall not be carried out when the work surfaces are damp or wet or at ambient temperatures below 0°C.

Welding with processes that utilize externally supplied shielding gas shall not be performed in a draught or wind unless the weld zone is protected from loss of shielding gas as required by CSA Standards W59 and W59.2 for steel and aluminum, respectively.

5.5.2 Preheat and Interpass Temperatures

Preheating and interpass temperatures for welding steel and aluminum shall follow the requirements of CSA Standards W59 and W59.2, respectively.

5.5.3 Plate Forming

Heat line bending by the application of oxy-fuel gas torches for creating curvatures in steel plates is permitted for certain shipbuilding grade steels, providing the requirements of this Section are met.

Heat line bending of aluminum requires special consideration and approval. Annex “C” of this Specification offers guidance notes on hot and cold forming practices for aluminum.

5.5.3.1 Personnel

Personnel performing heat line bending shall be trained and qualified prior to forming plates for production or repair of distortion. A list of qualified personnel shall be submitted to the Delegated Representative prior to any heat line bending operations.

5.5.3.2 Materials

Heat line bending is permitted on shipbuilding grade materials "A"-"EH36" providing the material has not been produced by the thermo-mechanical controlled rolling practice method. All other grades of steel including "FH-XX" and "XX-40 through XX-69" inclusive, shall require special consideration and approval by the Delegated Representative. Heat line bending is not permitted on quench and tempered steels.

5.5.3.3 Procedures

For those pre-approved shipbuilding grades of steel listed in Section 5.5.3.2 herein, forming is not to be performed between 205° C and 425° C. If the forming temperature exceeds 650° C for as-rolled, controlled rolled or normalized steels, mechanical tests are to be made to assure that these temperatures have not adversely affected the mechanical properties of the steel. Water quenching should not occur at temperatures above 550° C.

For applications where toughness is of particular concern, when the steel is formed below 650° C beyond 3% strain on the outer fibre, charpy-v-notch impact tests shall be performed to the satisfaction of the Delegated Representative to demonstrate impact properties meet material specification minimum requirements. The percent strain on the outer fibre shall be calculated by; 65 times the plate thickness divided by the outer radius.

For those materials not pre-approved, heat line bending procedures shall be submitted to the Delegated Representative for consideration. The submission shall contain results of metallurgical, physical and corrosion tests.

5.5.3.4 Controls

During plate forming, controls shall be in place to check maximum plate and water or air quenching temperatures. On material grades having notch toughness properties, direct supervision and monitoring is required.

5.5.4 Weld Size and Dimensions

The size and length of welds shall not be less than, nor shall they be substantially in excess of, those specified by the design requirement.

For tee joints in the skewed condition, the deposited leg length of fillet welds shall be adjusted based on the fitted angle and gap as required by CSA Standards W59 and W59.2 for steel and aluminum, respectively. Gaps shall not exceed 5 mm and the dihedral angle shall not exceed 135°.

5.5.5 Adjacent Weld Spacing

The minimum dimension between adjacent groove welds that do not appear on approved drawings or form part of an insert located in shell plating shall be 300 mm minimum.

The minimum dimension between a groove weld in a table member and a fillet weld to the same table member that do not appear on approved drawings shall be 30 mm minimum.

The minimum dimension between fillet welds attaching an abutting member to a table member and a groove weld in the same abutting member that do not appear on approved drawings shall be 300 mm minimum.

5.5.6 Inserts and Doublers

Where local increase in plate thickness is required, insert plates shall be used instead of doubler plates.

When an insert is to be located within the shell envelope the minimum dimension shall be 1000 mm x 1000 mm. When an insert is to be located in other locations the minimum dimension shall be 300 mm x 300 mm. Welds should be connected to existing butts and seams whenever possible. The minimum corner radius used for all insert plates independent of location shall be 5 (t), 75 mm minimum.

For shell and weather deck plating, the rolling direction of an insert plate shall be fitted to match the rolling direction of the surrounding base plates.

Welding sequences shall be carefully developed in order that shrinkage stress is balanced and restraint cracking does not occur.

5.5.7 Edge Preparation and Fitted Tolerances

The edge preparation is to be accurate and uniform and the parts to be welded are to be fitted in accordance with the approved joint detail. Means are to be provided for maintaining the parts to be welded in correct position and alignment during the welding operation.

Occasional misalignment of joints fitted for welding shall not exceed dimensional tolerances detailed in CSA Standards W59 and W59.2 for steel and aluminum, respectively, and this Specification.

5.5.8 Intercostals

The occasional misalignment of intercostals for steel structures shall not exceed the limitations illustrated in Figure 5.2.

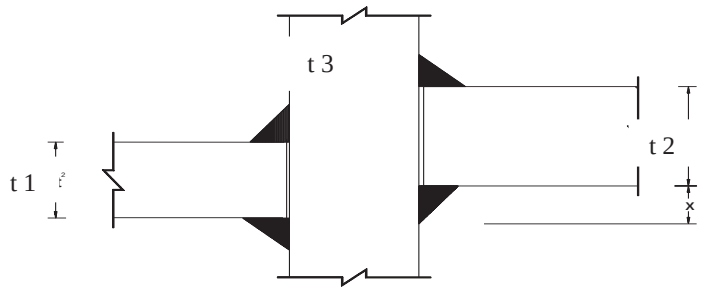

(X) = misalignment measured on the heel line; Where t 3 is less than t 1, then t 3 should be substituted for t 1		
For Strength Members:	- When (X) ≤ $t^1/3$	Increase Fillet Leg Size Equal to Offset
	- When (X) > $t^1/3$	Release and Re-Align
For Other Members:	- When (X) ≤ $t^1/2$	Increase Fillet Leg Size Equal to Offset
	- When (X) > $t^1/2$	Release and Re-Align

Figure 5.2 Intercostals

Misalignment of intercostals is not permitted in aluminum structures.

5.5.9 Dissimilar Plate Thickness

Plates of different thicknesses that are groove welded require a transition as follows:

- Exterior Shell Plating of Ice Transiting Steel Ships, 1 in 4
- Other, 1 in 3

When the difference in thickness is less than or equal to 5 mm and 3 mm for steel and aluminum, respectively, the transition may be created by welding as illustrated in Figure 5.3

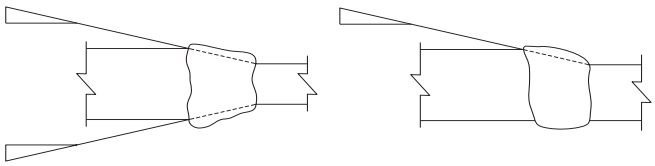

TRANSITION BY SLOPING WELD SURFACE

Figure 5.3 Sloping Weld

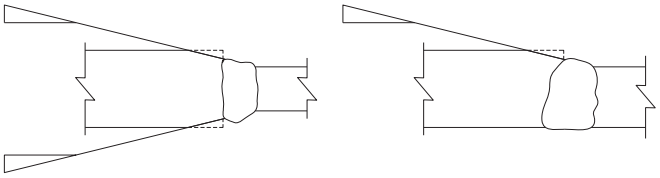

TRANSITION BY SLOPING WELD SURFACE AND CHAMFERING AFTER WELDING

When the difference in thickness exceeds 5 mm and 3 mm for steel and aluminum, respectively, the transition may be achieved by chamfering or a combination of chamfering and welding as illustrated in Figure 5.4.

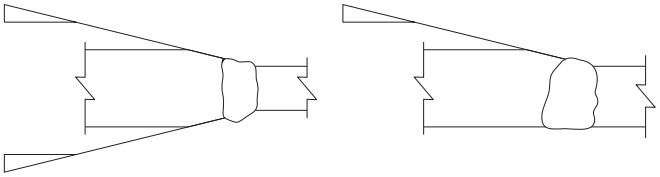

TRANSITION BY CHAMFERING THICKER PART PRIOR TO WELDING

Figure 5.4 Chamfering

5.5.10 Flush Tolerance

Surfaces of welds required to be flush shall meet requirements of CSA Standards W59 and W59.2 for steel and aluminum, respectively. In addition, for aluminum the weld shall be finished so as not to reduce the cross section below the base metal's mill tolerance set by the material's compliance standard.

5.5.11 Smooth Tolerance

Surfaces of groove welds required to be smooth shall be finished so as to ensure that the weld reinforcement does not exceed 1.5 mm. There shall be no valleys or grooves between individual weld beads and weld toes shall blend smoothly into the base metal without undercut or overlap.

5.5.12 Preparation of Welds for the Application of Coatings or Paints

Completed welds shall be prepared to the requirements of the coating and/or paint manufacturer prior to the materials being applied.

5.5.13 Distortion and Residual Stress

Welding of structures, sub-assemblies and parts shall progress symmetrically to minimize distortion. Members should remain unrestrained during welding to minimize stresses. Welds shall be deposited in a sequence that shall balance the heat applied throughout the welding process. Welds shall progress from points where the parts are relatively fixed in position towards points where they have relatively greater freedom of movement.

It should be noted, plain carbon steels are more forgiving than aluminum. The thermal expansion coefficient of aluminum is about twice that of steel. The total amount of thermal expansion varies inversely with the welding speed. As a result, fixtures should be designed so plate alignment will accommodate twice the dimensional change normally expected for welding a similar steel component.

Unlike steel, restrictions apply to correcting distortions in aluminum caused by welding. In addition, as-deposited weld metal elongation properties are 5 - 7% on average rendering weld deposits more prone to cracking under restraint.

Weld sizes shall be kept to a minimum. Excessive weld cross sections and over welding shall be avoided. Joints anticipated to cause significant shrinkage shall be welded first.

5.5.13.1 Submission of Welding Sequence

All Contractors shall submit a welding sequence to the Delegated Representative prior to performing any welding work. Welding sequences shall be developed for the method of construction (block or frame and plate) and for insert plates.

For block construction, a sequence for assembling blocks and erecting and welding blocks to each other at the berth is required.

For frame and plate construction, a sequence for welding shell butts and seams, frames and bulkheads to shell plating, tank top to inner bottom framing and "A" frames and stern tubes and other critical components is required.

5.5.13.2 Restrained Joints

When welding joints that are restrained and/or where significant shrinkage is anticipated, welding shall be carried out continuously or to a point that shall ensure freedom from cracking after the joint has cooled below the interpass temperature. Root passes shall be of adequate size to withstand shrinkage stress. Block welding or cascade welding techniques should be used wherever practicable.

5.5.13.3 Jigs and Fixtures

Jigs, fixtures, clamping and strong backs shall be used in such a manner as to avoid restraint during welding. Strong backs welded on one side of the joint and wedged on the other are preferred. When removing strong backs, care shall be taken not to scar the material to which they are welded. Repair of scars to base plates shall be in accordance with approved procedures.

5.5.13.4 Progression

Frames, stiffeners or intercostals should be welded to each other before they are welded to the plating. When joining sub-assemblies to each other, joints connecting plating should be welded prior to welding the butt joints of the sub-assembly framing.

Welding should be started in the centre of the ship and progress outward, forward and aft. Sub-assemblies should be welded in the same manner starting in the centre, progressing outward.

Transverse butts in plating should be welded prior to longitudinal seams.

5.5.13.5 Intersections and Release Distance

Care shall be taken when welding intersecting butts and seams. The techniques illustrated in Figure 5.5 and Figure 5.6 shall be followed.

1. Weld the butt between (B) and (C) and then the weld seam between (A) and (B).

Figure 5.5 Staggered Butt Weld

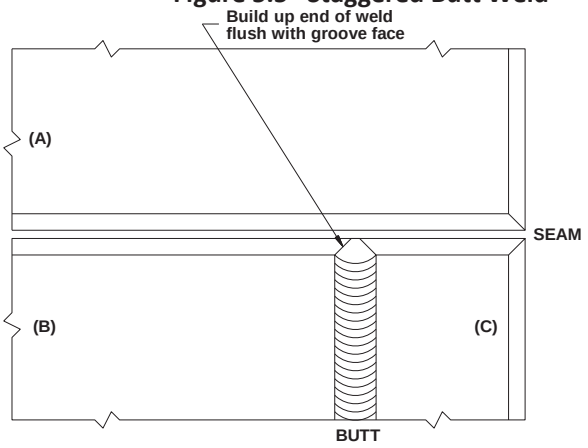

Figure 5.6 Aligned Butt Weld

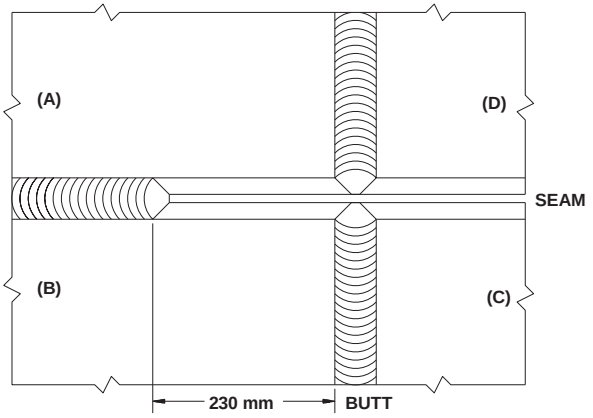

1) Weld seam between (A) and (B) to within 230 mm of butt.
2) Weld butt between (B) and (C).
3) Weld butt between (A) and (D).
4) Complete welding seam to within 230 mm of next butt.

Stiffeners fillet welded to plating that traverse butts or seams shall be released and remain unwelded for a distance of at least 230 mm in each direction until butts or seams they traverse have been fully welded. For plates $\geq$ 19 mm in thickness, release distance shall be increased to 300 mm minimum.

5.5.14 Repair of Distortion

When distortion of plating between stiffeners exceeds the limits detailed in Table 6.10 of IACS No. 47, Shipbuilding and Repair Quality Standard as reproduced below, straightening shall be required.

Members distorted by welding shall be straightened by carefully following the procedures approved by the Delegated Representative following the methods and controls offered in CSA Standards W59 and W59.2 for steel and aluminum, respectively, and this Specification.

Item	Standard	Limit	Item	Standard	Limit
Shell plate • Parallel part (side & bottom shell) • Fore and aft part	 4 mm 5 mm	 8 mm 8 mm	Forecastle & Poop deck • Bare part • Covered part	 4 mm 6 mm	 8 mm 9 mm
Tank top plate	4 mm	8 mm	Super structure deck • Bare part • Covered part	 4 mm 7 mm	 6 mm 9 mm
Bulkhead • Longl. Bulkhead • Trans. Bulkhead • Swash Bulkhead	 6 mm	 8 mm	House wall • Outside wall • Inside wall • Covered part	 4 mm 6 mm 7 mm	 6 mm 8 mm 9 mm
Strength deck • Parallel part • Covered part • Fore and aft part	 4 mm 6 mm 7 mm	 8 mm 9 mm 9 mm	Interior member (web of girder, etc.)	5 mm	7 mm
Second deck • Bare part • Covered part	 6 mm 7 mm	 8 mm 9 mm	Floor and girder in double bottom	5 mm	8 mm

5.5.15 Temporary Welds and Lug Removal

5.5.15.1 Temporary Welds

Temporary welds shall not be located on a welded butt or seam.
Temporary welds shall only be made using approved weld procedures.

5.5.15.2 Lug and Temporary Attachments

For the hull exterior, exposed bulkheads, decks, panels, superstructure, walkways, bulwarks, fairleads, bollards, and any other zone deemed necessary to avoid operational hazards and to provide a good cosmetic appearance to the vessel, all lugs, temporary fairing aids, studs, etc., shall be removed to render a flush and smooth surface.

5.5.15.3 Removal of Temporary Welds, Lugs and Attachments

Temporary welds shall be removed and the surface restored flush with the original surface.
Hammering or other mechanical means that will result in scars to base material shall be avoided.
Scars in plate surfaces shall be repaired by welding with approved procedures.

Welding electrodes and consumables for repairing scars in exterior shell plating shall be corrosion resistant in sea water and completed welds shall meet the acceptance criterion of this Specification.

Repair welds shall be ground flush or smooth as required by the Delegated Representative.

5.5.16 Arc Strikes

Arc strikes outside the area of welds should be avoided following the requirements of CSA Standards W59 and W59.2 for steel and aluminum, respectively, and of this Specification.
When an arc strike occurs in a location deemed critical by the Delegated Representative, the surface shall be lightly ground and inspected with the appropriate non-destructive inspection methods.
Repair of arc strikes shall be to the satisfaction of the Delegated Representative.

5.6 WELD INSPECTION REQUIREMENTS

All non-destructive inspections required in this Specification shall be considered the minimum requirements of the Owner and performed by a qualified third party retained by the contractor. The method and location of inspections shall be determined by the Delegated Representative. Inspection test results shall be returned to the Delegated Representative within requested time frame. No interpretation report or radiograph shall be destroyed or discarded.

The minimum number of locations ordered for examination at one time shall be a combination of any method cumulatively totalling 10, unless otherwise agreed to by the Delegated Representative.

Contractors desiring to use ultrasonic inspection in lieu of radiographic inspection to examine welds located in steel structures shall submit a detailed proposal to the Delegated Representative to consider. At the Delegated Representatives' discretion, ultrasonic inspection may be accepted in lieu of radiographic inspection if the length of inspection is as required for ultrasonic inspection in Table 5.7 herein and the ultrasonic inspection procedures and techniques are proven accurate and repeatable by 30% spot radiography of the first fifteen locations examined by ultrasonic methods. Substitute inspection methods are not permitted for examining welds located in aluminum structures.

5.6.1 Facility Welding Audits

In addition to the CWB biannual audits required to maintain certification to CSA Standards W47.1 and W47.2, at its own expense, the Owner shall retain the services of the CWB to perform audits of the contractor at a frequency deemed necessary by the Owner. The Owner's CWB auditor will not be the Certification Services Representative performing the contractor's biannual certification audits. The Owner's CWB audits shall measure the contractor's compliance with the requirements of this Specification and include as a minimum a pre-weld, weld, post weld and contractor third party inspection documentation review and check.

5.6.2 Non Destructive Inspection Audits

The Owner reserves the right to retain the services of the National Non Destructive Testing Certification Body of Natural Resources Canada (NRCAN) or another organization acceptable to the Owner to perform review and audits of NDT personnel qualifications, procedures, inspection activities and reported results. Audits shall measure the contractor's compliance with the requirements of this Specification.

5.6.3 Selection of Non Destructive Inspection Methods

The method of inspection shall be appropriate to depict discontinuities dependent on the material, joint and weld type, the orientation of potential discontinuities within the weld cross section and access to the part in need of inspection. All welds shall be examined by visual inspection.

Full penetration welds shall be selectively sampled by radiographic and ultrasonic inspection methods. Radiographic inspection shall be used for full penetration groove welds in butt joints. Ultrasonic inspection shall be used for full penetration groove welds in tee and corner joints.

Fillet welds in steel structures shall be selectively sampled by liquid penetrant and magnetic particle inspection. Fillet welds in aluminum structures shall be selectively sampled by liquid penetrant inspection.

5.6.4 Locations Subjected to Inspection

Welds subjected to non-destructive inspection shall include, but will not necessarily be limited to, the following locations:

Table 5.6 Locations Subjected to Inspection

Strength members	○ Flat and vertical keel; ○ Tank margin plates; ○ Sheer strake; ○ Bilge strake; ○ Deck stringer plates.
Shell plating:	○ Intersection of butts and seams; ○ Transverse butts; ○ Longitudinal seams.
Other:	○ Inserts and closure plates; ○ Cruciform welds; ○ Terminal welds.

The exact position of inspections shall be determined by the Delegated Representative

5.6.5 Extent of Inspections

5.6.5.1 Visual Inspection:

All welds shall be visually inspected their entire length.

5.6.5.2 NDE Methods – New Construction

For new construction, in addition to the requirements of Section 5.6.5.1 herein, the number of locations inspected by liquid penetrant, magnetic particle, radiographic and ultrasonic test methods shall be in accordance with the calculated requirements of Table 5.7a or Table 5.7b herein.

Table 5.7a Quantity of Inspections – New Construction Vessels ≥12 m LOA

Inspection Method	Formula for Determining the Number Required	
	Steel Vessels	**Aluminum Vessels**
UT Inspections	= 0.25 x (L+B+D)	= N/A
MT or PT Inspections	= 0.50 x (L+B+D)	= N/A for MT = 0.75 x (L+B+D) for PT
RT Inspections	= 0.75 x (L+B+D)	= 1.25 x (L+B+D)
Where: PT= Penetrant Inspections, **MT**= Magnetic Particle Inspections, **RT**= Radiographic Inspections, **UT**= Ultrasonic Inspections and **L**= Overall Length in meters, **B**= Greatest Moulded Breadth in meters and **D**= Moulded Depth at Side, in meters, measured at L/2.		

For example following the requirements of Table 5.7a: A lifeboat 15 meters in length having a breadth of 4.5 meters and a moulded depth of 2 meters will require:

Inspection Method	Formula for Determining the Number Required	
	Steel Vessels	**Aluminum Vessels**
UT Inspections - 1000 mm – butts or seams - 500 mm x 500 mm– intersecting butts & seams	= 6	= N/A
MT or PT Inspections - 1000 mm	= 11	= N/A for MT = 16 for PT
RT Inspections - 440 mm – butts or seams - 300 mm x 300 mm – intersecting butts & seams	= 16	= 26

Table 5.7b Quantity of Inspections – New Construction Vessels <12 m LOA

Inspection Method	Formula for Determining the Number Required	
	Steel Vessels	**Aluminum Vessels**
UT Inspections - 1000 mm – butts or seams - 500 mm x 500 mm– intersecting butts & seams	= 0.25 x (L+B+D)	= N/A
MT or PT Inspections - 1000 mm	= 0.50 x (L+B+D)	= N/A for MT = 0.50 x (L+B+D) for PT
RT Inspections - 440 mm – butts or seams - 300 mm x 300 mm – intersecting butts & seams	= 0.75x (L+B+D)	= 1.00 x (L+B+D)
Where: PT= Penetrant Inspections, **MT**= Magnetic Particle Inspections, **RT**= Radiographic Inspections, **UT**= Ultrasonic Inspections and **L**= Overall Length in meters, **B**= Greatest Moulded Breadth in meters and **D**= Moulded Depth at Side, in meters, measured at L/2.		

For example following the requirements of Table 5.7b: A service craft 10 meters in length having a breadth of 3.0 meters and a moulded depth of 1.00 meter will require:

Inspection Method	Formula for Determining the Number Required	
	Steel Vessels	**Aluminum Vessels**
UT Inspections	= 4	= N/A
MT or PT Inspections	= 8	= N/A for MT = 8 for PT
RT Inspections	= 10	= 14

When access does not permit the use of 300 mm by 300 mm film size at intersecting butts and seams, a series of films shall be positioned to offer examination of 150 mm of weld in all directions.

5.6.5.3 NDE Methods - Other

For work packages other than new construction, in addition to the requirements of Section 5.5.6.1 herein, the number of locations inspected by liquid penetrant, magnetic particle, radiographic and ultrasonic test methods shall be in accordance with the requirements of Table 5.8 herein.

Table 5.8 Quantity of Inspections – Other

Item	Method	Number
Entire Plate Renewal – Butts & Seams (shell, decks, bulkheads, tanktop etc)	RT	6 per plate
Entire Plate Renewal – Butts & Seams (secondary structure)	RT	2 per plate
Partial Plate Renewal – Butts & Seams (primary & secondary structure)	RT	See inserts herein
Insert – Butt & Groove Welds (shell, decks, bulkheads, tanktop etc.)	RT	4 per insert
Insert – Groove Welds (other primary structure)	RT	2 per insert
Insert – Groove Welds (secondary structure)	RT	1 per insert
Hull Penetration – Pipe or Plate to Shell Plate Opening (below waterline)	UT	Entire Weld Length
Pressure Pipe Girth Welds	RT	1 of each 5 welds Full Circumference

5.6.6 Surface Preparation Prior to Inspection

Prior to inspection by any method, welds and adjacent areas shall be cleaned so as to be free from all rust, scale, primer, paint, weld spatter and other foreign matter to enable accurate interpretation of the area of interest (weld zone). Staging and lighting shall be provided to permit safe access for inspection.

For liquid penetrant, magnetic particle and radiographic inspections weld profiles and contours shall be sufficiently smooth to ensure that geometric conditions do not cause false indications.

For ultrasonic inspection, the contact surfaces shall be smooth to the extent that the finish does not interfere with the inspection. Tests performed on rough surfaces shall require special calibration procedures.

5.6.7 Delayed Inspection

When testing welds subject to high restraint and/or when the steel yield strength is greater than 360 MPa, tests shall be delayed at least 48 hours after weld completion.

5.6.8 Inspection Personnel Qualifications and Certificates

5.6.8.1 Visual Inspection

Individuals performing and interpreting visual inspection shall be currently certified by the CWB in accordance with CSA Standard W178.2, Certification of Welding Inspectors. The individual shall be Level 2 or Level 3 and shall maintain the following Code endorsement categories: Ships and Marine Structures; and Buildings and Industrial Structures. Level 1 personnel may only observe and/or assist Level 2 and Level 3 personnel perform the inspections.

5.6.8.2 Other Inspection Methods

Individuals performing and interpreting liquid penetrant, magnetic particle, radiographic and ultrasonic inspections shall be currently qualified by the National Non Destructive Testing Certification Body of Natural Resources Canada (NRCAN) to CAN/CGSB 48.9712 Level 2 or Level 3. Level 1 personnel may only observe and/or assist Level 2 and Level 3 personnel perform the inspections.

5.6.8.3 Certificates

For each inspection method, a copy of the examining individual's current year qualification certificate shall be attached to the initial interpretation or verification report supplied to the Delegated Representative. If a new validation year is entered or if a different individual is used, new qualification certificates shall be supplied with any subsequent interpretation report being submitted.

5.6.9 Steel Structures

5.6.9.1 Inspection Procedures

Inspection procedures and techniques are to be prepared by Level 3 personnel for each inspection method required by this Specification and submitted to the Delegated Representative prior to performing any inspections of completed work. Procedures for visual inspection shall follow the requirements of Clause 7 of CSA Standard W59 and ASME Section V. Procedures for liquid penetrant and magnetic particle inspections shall follow the requirements of Clause 7 of CSA Standard W59. Procedures for radiographic and ultrasonic inspections shall follow the requirements of Clauses 7 and 8 of CSA Standard W59.

5.6.9.2 Acceptance Criterion

Visual and liquid penetrant inspection acceptance criterion shall be in accordance with Clause 12.5.4.1 of CSA Standard W59, except as modified by this Specification and the following:

- For welds in material thicknesses less than 5 mm, undercut must not exceed 0.5 mm.
- For welds in material thicknesses greater than or equal to 5 mm, undercut must not exceed 1.0 mm
- Pores open to the surface are not permitted in any weld of the primary structure as well as any weld of the secondary structure exposed to weather elements and fluids of any type.

The magnetic particle inspection acceptance criterion shall be in accordance with Clause 12.5.4.1 or 12.5.4.3 of CSA Standard W59. The radiographic inspection acceptance criterion shall be in accordance with Clause 12.5.4.3 of CSA Standard W59. The ultrasonic inspection acceptance criterion shall be in accordance with Clause 12.5.4.4 of CSA Standard W59.

5.6.9.3 Radiographic Inspection

5.6.9.3.1 Source of Radiation

Radiographs shall be made by either x-ray or gamma ray as follows:

- x-ray shall be used for material less than 6 mm in thickness.
- the minimum material thickness inspected by gamma ray shall be 6 mm.
- the maximum material thickness inspected by gamma ray shall be 50 mm. Material thicknesses greater than 50 mm shall be examined by ultrasonic methods.
- for gamma ray applications, the source of radiation shall be Iridium 192.

5.6.9.3.2 Radiographic Film

The class of film is dependent on material thickness, source of radiation and required sensitivity. The following shall apply:

- for x-ray on material thickness less than 6 mm, class II film may be used providing the 2-2(t) hole is clearly visible on the radiograph. Otherwise, class I film shall be used;
- when the material thickness is greater than or equal to 6 mm and less than 12 mm, class I film and iridium 192 gamma radiation shall be used;
- when the material thickness is greater than or equal to 12 mm, class I or class II film and iridium 192 gamma radiation may be used.

5.6.9.3.3 Display of Information and IQI Essential Holes

The exposed radiograph shall show the outline of the “Hole Type” Image Quality Indicator (IQI), shims, IQI identification number, essential hole, radiograph identification number, location markers, date it was taken, reference to the contract number or vessel identification and radiographer's initials.

- When x-ray is used on materials thicknesses < 6 mm, the image of the 2-2(t) hole shall appear clearly on the radiograph.
- When iridium 192 gamma radiation is used on material thicknesses $\geq$ 6 mm but < 12 mm where class 1 film is required, the image of the 2-2(t) hole shall appear clearly on the radiograph.
- When iridium 192 gamma radiation is used on material thicknesses $\geq$ 12 mm but $\leq$ 30 mm, the image of the 2-4(t) hole shall appear clearly on the radiograph.
- When iridium 192 gamma radiation is used on material thicknesses greater than 30 mm, the image of the 2-2(t) hole shall appear clearly on the radiograph.

5.6.9.3.4 Intensification Screens

Intensification screens shall not be used. If adequate contrast cannot be achieved with a single film when examining unequal thicknesses, a dual exposure technique shall be used.

5.6.10 Aluminum Structures

5.6.10.1.1 Inspection Procedures

Inspection procedures and techniques are to be prepared by Level 3 personnel for each inspection method required by this Specification and submitted to the Delegated Representative for approval prior to use.

Procedures for visual inspection shall follow the requirements of Clause 7 of CSA Standard W59.2 and ASME Section V. Procedures for liquid penetrant, radiographic and ultrasonic inspections shall follow the requirements of Clause 7 of CSA Standard W59.2, and of this Specification.

5.6.10.2 Acceptance Criterion

The visual, liquid penetrant, radiographic and ultrasonic inspection acceptance criterion shall be in accordance with Clause 6 of CSA Standard W59.2, except as modified by this Specification and the following:

- For welds in material thicknesses less than 5 mm, no undercut is permitted.
- For welds in material thicknesses greater than or equal to 5 mm, undercut must not exceed 0.5 mm.
- Pores open to the surface are not permitted in any weld of the primary structure as well as any weld of the secondary structure exposed to weather elements and fluids of any type.

If visual inspection reveals melt-through or suck-back, the affected weld metal or material shall be dressed by mechanical methods, repair welded if required and examined by liquid penetrant inspection its entire length.

5.6.10.3 Radiographic Inspection

5.6.10.3.1 Source of Radiation

Radiographs shall be made by x-ray. The maximum permissible kilovoltages shall be as shown in Table 5.9

Table 5.9 Thickness vs. Maximum Kilovoltage

Thickness	Max Kilovolts
Up to 6 mm	80
6 mm to 13 mm	80 to 120
13 mm to 19 mm	120 to 130
19 mm to 25 mm	130 to 150
Greater than 25 mm	170 maximum

5.6.10.3.2 Radiographic Film

All radiographic film shall be class I only.

5.6.10.3.3 Display of Information and IQI Essential Holes

The exposed radiograph shall show the outline of the “Hole Type” Image Quality Indicator (IQI), shims, IQI identification number, essential hole, radiograph identification number, location markers, the date it was taken, reference to the contract number or vessel identification and the radiographer's initials.

For material thickness less than 5 mm the 2-1 (t) essential hole shall appear clearly on the radiograph. For material thickness 5 mm and over, the image of the 2-2 (t) essential hole shall appear clearly on the radiograph.

5.6.10.3.4 Intensification Screens

Intensification screens shall not be used. If adequate contrast cannot be achieved with a single film when examining unequal thicknesses, a dual exposure technique shall be used.

5.6.11 Double Loaded Film Requirement

All radiographic inspection shall be taken with a double loaded film technique so that two film negatives are obtained for each inspection. One film negative shall be sent to the Director, Marine Engineering and the other film negative shall remain at the work site in the possession of the onsite Delegated Representative. At contract completion, the film negatives stored at the work site shall be sent to the Director, Marine Engineering.

5.6.12 Radiographic Film Viewer

The Contractor shall have a professional radiographic film high intensity viewer capable of penetrating film densities of 1.5 to 4.5. The viewer shall be kept at the work site and available for use by the Contractor and Delegated Representatives for the entire duration of the contract and warranty period.

5.6.13 Inspection Reports

Inspection reports shall record the date of inspection, builder/Contractor's name, vessel type and hull number, Owner's name, inspection organizations name, inspection procedure number, interpretation report number, item, location, all discontinuities including single and accumulated indications, weld acceptance criteria, location of discontinuities and the name, qualification, level and signature of the individuals performing the inspection and interpretation. Inspection reports shall reference material type, thickness, joint type and geometry.

When a portion of a weld is to be inspected by liquid penetrant, magnetic particle, radiographic or ultrasonic methods, the location shall be subjected to visual inspection in advance of the other inspection method. Interpretation reports are required for both inspection methods.

5.6.13.1 Visual Inspection

For block assembly new construction methods, a visual inspection verification report is required for each fabricated block and joining of blocks to each other.

For frame and plate new construction methods or work packages other than new construction, a verification report is required for each fabricated compartment (e.g. between two adjacent bulkheads/engine room compartment).

The verification report shall be a statement signed off by the Contractor’s qualified inspector which states all welds have been inspected and they conform to requirements of this Specification. Verification reports shall be presented to the Delegated Representative prior to the Owner’s scheduled audit date.

5.6.13.2 Radiographic Inspection

In addition to the requirements of Sections 5.6.13 and 5.6.13.1, radiographic interpretation reports shall reference IQI design and identification number, source of radiation, source to film distance, angle of incident radiation, film type and intensification screen design (if permitted) and, material type, thickness, joint type and geometry.

Each interpretation report shall contain a report number. The report number shall include the Contractor's hull number (i.e. #1-218, etc.) and/or ship’s name.Each location listed on the report shall be identified with an Inspection number (i.e., location #50 port is Inspection #3).

For radiographs, each film and its duplicate shall be submitted in a paper protective folder. The identification to appear on each folder shall be Inspection #, Report # and Hull # as illustrated below.

Inspection #		Report #		Hull #
3	-	1	-	218

Each repaired location shall reference the original report of the rejected location, for example:

Location #50	-	Port R1	-	See 3-1-218

5.6.13.3 Inspection Arrangement Drawings

The Contractor shall prepare an adequate number of non-destructive inspection arrangement drawings and sketches that accurately document the location of the inspections.

The inspection method, weld identification number and abbreviations for each inspection shall be accurately recorded on a progressive basis (e.g. UT #75-R1, RT # 150 - adjacent - aft, etc). A legend detailing the identification symbols used by the Contractor shall appear on each arrangement drawing.

The Contractor shall supply updated arrangement drawings to the Delegated Representative on a regular basis throughout the contract period. Three copies of the final drawings shall be supplied to the Delegated Representative at contract completion.

5.6.14 Overlapping Inspection

When a discontinuity extends to either or both ends of a location being inspected, additional overlapping inspection shall be required. The overlapping inspection shall show a portion of the original end.

When an overlapping inspection displays unacceptable discontinuities at either or both ends, the entire weld length shall be considered unacceptable unless proven otherwise by the Contractor. Under this condition, welds shall be repaired to the extent required by the Delegated Representative.

All overlapping inspections shall be taken prior to repair of the originally rejected location. If repair has occurred prior to overlapping inspections and the entire weld length has not been repaired, the overlapping inspections shall be placed to overlap the start and finish of the repair.

The Contractor shall be responsible for all costs associated with performing overlapping inspections.

5.6.15 Rejected Weld or Part

When a portion of a weld contains discontinuities not meeting the acceptance criteria of this Specification, corrective action may be taken providing the Delegated Representative has reviewed the extent of unacceptable discontinuities and is in agreement with the repair procedure.

The repaired area shall be inspected by at least the same non-destructive inspection method used for the original inspection. Care shall be taken to ensure that the inspection of the repaired area is accurately located so that it measures the original location that was rejected.

For each failed location, one new location shall be examined. All new locations shall be selected by the Delegated Representative. Each new location shall be considered in addition to the requirements of this Section. All costs associated with performing the additional inspections shall be at the Contractor's expense.

When an entire weld, base material, entire part or entire section contains unacceptable discontinuities as specified herein, no corrective action shall be taken until the repair procedure has been approved by the Delegated Representative and other interested parties.

Section 6 WELDING STRUCTURAL STAINLESS STEEL

6.1 SCOPE

The requirements of this Section shall apply to welding and inspection of all structural stainless steels.

6.2 DESIGN AND DRAWINGS

Weld design shall be to the Rules of a Classification Society that is an approved Recognized Organization by Transport Canada Marine Safety and Security.

Unless to the otherwise approved by the Delegated Representative, the following conditions shall be met:

- all groove welds in butt joints shall be full penetration; and,
- all corner joints shall be full penetration groove welds combined with a single continuous fillet weld.

A weld design schedule shall be submitted to the Delegated Representative in drawing form for review prior to commencing any welding work.

6.3 CERTIFICATION

Contractors undertaking the welding of stainless steel within the scope of this Specification shall be certified by the CWB to the requirements of CSA Standard W47.1 Division 1 or 2.

Welders, welding operators and welding procedures shall meet the requirements of CSA Standard W47.1, and of AWS D1.6 as permitted by CSA Standard W47.1.

6.4 WELDING ELECTRODES AND CONSUMABLES

Welding electrodes and consumables shall be selected following the requirements of AWS D1.6.

Welding electrodes and consumables for welding of stainless steel shall be certified by the CWB to the requirements of CSA Standard W48 or the applicable AWS A5 series of standards.

6.5 WORKMANSHIP

Welding shall meet the requirements of CSA Standard W47.1 and AWS D1.6, and of this Specification.

6.6 INSPECTION

All examination and inspection of structural stainless steel shall comply with the requirements of AWS D1.6

6.6.1 Personnel

All inspection personnel shall meet the requirements of Chapter 5.0, Section 5.6.8 of this Specification.

6.6.2 Inspections

All welds shall be visually examined along 100% of their length for correct size, profile and the presence of visible defects. Unacceptable conditions or defects shall be repaired to the satisfaction of the Delegated Representative.

Full penetration welds shall be selectively sampled. Radiographic inspection shall be used for full penetration groove welds in butt joints. Ultrasonic inspection shall be used for full penetration groove welds in tee and corner joints.

Fillet welds shall be selectively sampled by liquid penetrant and/or magnetic particle inspection.

All of the requirements of Section 5.5 of this Specification shall be met unless otherwise specified in this Chapter.

6.6.3 Acceptance Criterion

The visual inspection acceptance criterion shall be in accordance with Clauses 5.11 and 6.29.1 of AWS D1.6.

The liquid penetrant inspection acceptance criterion shall be in accordance with Clauses 6.7.6 and 6.29.4 of AWS D1.6.

The magnetic particle inspection acceptance criterion shall be in accordance with Clauses 6.7.7 and 6.29.2 of AWS D1.6.

The radiographic inspection acceptance criterion shall be in accordance with Clauses 6.9, 6.10 and 6.29.2 of AWS D1.6.

The ultrasonic inspection acceptance criterion shall be in accordance with Clause 6, Part “C” and Clause 6.29.3 of AWS D1.6.

Section 7 OTHER STRUCTURAL MATERIALS

7.1 SCOPE

The requirements of this Section shall apply to welding and inspection of all structural materials other than those included in the scope of CSA Standards W47.1, W59, W47.2 and W59.2 and AWS D1.6.

7.2 DESIGN AND DRAWINGS

Weld design shall be to the Rules of a Classification Society that is an approved Recognized Organization by Transport Canada Marine Safety and Security.

Unless otherwise approved by the Delegated Representative, the following conditions shall be met:

- all groove welds in butt joints shall be full penetration; and,
- all corner joints shall be full penetration groove welds combined with a single continuous fillet weld.

A weld design schedule shall be submitted to the Delegated Representative in drawing form for review prior to commencing any welding work.

7.3 CERTIFICATION

Welders, welding operators and welding procedures shall meet the requirements of ASME Section IX or other suitable standard(s) approved for use by the Designated Representative and the CWB.

All tests shall be fully witnessed and documented by the CWB.

7.4 WELDING ELECTRODES AND CONSUMABLES

Welding electrodes and consumables shall be selected following the requirements of ASME Section IX or other suitable standard(s) approved for use by the Designated Representative and the CWB.

Welding electrodes and consumables shall conform to the requirements of ASME Section IX and the applicable AWS A5 series of standards or other suitable standard(s) approved for use by the Designated Representative and the CWB.

7.5 WORKMANSHIP

Welding shall meet the requirements of CSA Standard W59, and of this Specification.

7.6 INSPECTION

7.6.1 Personnel

All inspection personnel shall meet the requirements of Chapter 5.0, Section 5.6.8 of this Specification.

7.6.2 Inspections

All welds shall be visually examined along 100% of their length for correct size, profile and the presence of visible defects. Unacceptable conditions or defects shall be repaired to the satisfaction of the Delegated Representative.

Full penetration welds shall be selectively sampled. Radiographic inspection shall be used for full penetration groove welds in butt joints. Ultrasonic inspection shall be used for full penetration groove welds in tee and corner joints.

Fillet welds shall be selectively sampled by liquid penetrant and/or magnetic particle inspection.

All of the requirements of Section 5.5 of this Specification shall be met unless otherwise specified in this Chapter.

7.6.3 Acceptance Criterion

The visual and liquid penetrant inspection acceptance criterion shall be in accordance with Clause 12.5.4.1 of CSA Standard W59.

The magnetic particle inspection acceptance criterion shall be in accordance with Clause 12.5.4.1 or 12.5.4.3 of CSA Standard W59.

The radiographic inspection acceptance criterion shall be in accordance with Clause 12.5.4.3 of CSA Standard W59.

The ultrasonic inspection acceptance criterion shall be in accordance with Clause 12.5.4.4 of CSA Standard W59.

Section 8 PRESSURE PIPE WELDING

8.1 SCOPE

The requirements of this Chapter shall apply to welding and inspection of all pressure piping in the absence of Classification Society oversight.

8.2 DESIGN AND DRAWINGS

Weld design for pressure piping shall be in accordance with ASME Code B31.1 - Power Piping. A weld design schedule for pressure piping shall be submitted to the Delegated Representative in drawing form for review prior to commencing any welding work.

8.3 WELDING ELECTRODES AND CONSUMABLES

All welding electrodes and consumables shall comply with ASME IX and ASME B31.1. Electrodes and consumables not covered by ASME Section IX may be used provided a weld procedure qualification test is successfully completed prior to performing any work. Tests shall reflect the requirements of ASME Section IX.

8.4 PERSONNEL QUALIFICATIONS

Qualification of welders and welding operators shall comply with the requirements of ASME Section IX and ASME B31.1. Testing and approval shall be administered by the local Provincial Pressure Vessel Authority. Personnel qualification records shall be forwarded to the Delegated Representative prior to welding.

8.5 QUALIFICATION OF WELD PROCEDURES

Welding procedures shall be qualified in accordance with ASME Section IX and ASME B31.1. Testing and approval shall be administered by the local Provincial Pressure Vessel Authority. Weld procedure qualification records shall be forwarded to the Delegated Representative prior to welding.

8.6 WORKMANSHIP

All workmanship shall be in accordance with the requirements of ASME B31.1.

8.7 INSPECTION

All examination and inspection of pressure piping, pressure vessels and pressure containment systems shall comply with the requirements of ASME B31.1.

8.7.1 Personnel

All inspection personnel shall meet the requirements of Chapter 5.0, Section 5.6.8 of this Specification.

8.7.2 Inspections

All welds in pressure piping and pressure containment systems shall be visually examined along 100% of their length for correct size, profile and the presence of visible defects. Unacceptable conditions or defects shall be repaired to the satisfaction of the Delegated Representative.

Full penetration groove welds shall be sampled by spot radiography at a frequency of one in every five welds produced by each welder. Welders shall be assigned a unique identification number that shall be stamped on each full penetration connection welded. If a radiograph reveals gross defects, one additional joint shall be inspected by radiography. If the new radiograph reveals gross defects, the remaining three welds shall be radiographed

Repair of defects shall be performed following procedures accepted by the Delegated Representative. Second repair attempts shall not be permitted without due consideration of the conditions and agreed to by the Delegated Representative.

8.7.3 Acceptance Criterion

For all inspection methods, welds shall be evaluated in accordance with the acceptance standards of ASME B31.1.

Annex A REFERENCED CODES, PUBLICATIONS AND STANDARDS

A.1 LIST OF CODES, PUBLICATIONS AND STANDARDS

ASME	B31.1	Power Piping
	Section V	Boiler and Pressure Vessel Code, Non-destructive Examination
	Section IX	Boiler and Pressure Vessel Code, Welding and Brazing Qualifications
AWS	A5 Series	Specifications for Filler Metals and Consumables
	A5.10	Specification for Bare Aluminum and Aluminum-Alloy Welding Electrodes and Rods
	D1.6	Structural Welding Code – Stainless Steel
CAN/CGSB	48.9712	Qualification and Certification of Non-Destructive Testing Personnel
CAN/ISO	14341:XX	Welding consumables – Wire electrodes and deposits for gas shielded metal arc welding of non-alloy and fine grain steels - Classification
CSA	G40.21	Structural Quality Steel
	W47.1	Certification of Companies for Fusion Welding of Steel
	W47.2	Certification of Companies for Fusion Welding of Aluminum
	W48	Filler Metals and Allied Materials for Metal Arc Welding
	W59	Welded Steel Construction (Metal Arc Welding)
	W59.2	Welded Aluminum Construction
	W178.2	Certification of Welding Inspectors

Annex B TESTS FOR RATING CORROSION RESISTANCE OF CARBON STEEL WELD METALS IN SEA WATER

B.1 SCOPE

When required by Section 5.4.1.9 and 5.4.1.10 of this Specification, weld metals shall be tested for corrosion resistance in sea water following the procedures detailed herein. This Annex specifies the requirements for welding and testing plate assemblages. Organizations performing machining, mechanical testing of welds and corrosion tests shall be approved by the Delegated Representative in advance of any tests. Welding of test assemblies shall be fully witnessed and documented by the CWB.

B.2 TEST ASSEMBLY

Test assemblies shall be made in accordance with the requirements of Figure B1 herein.

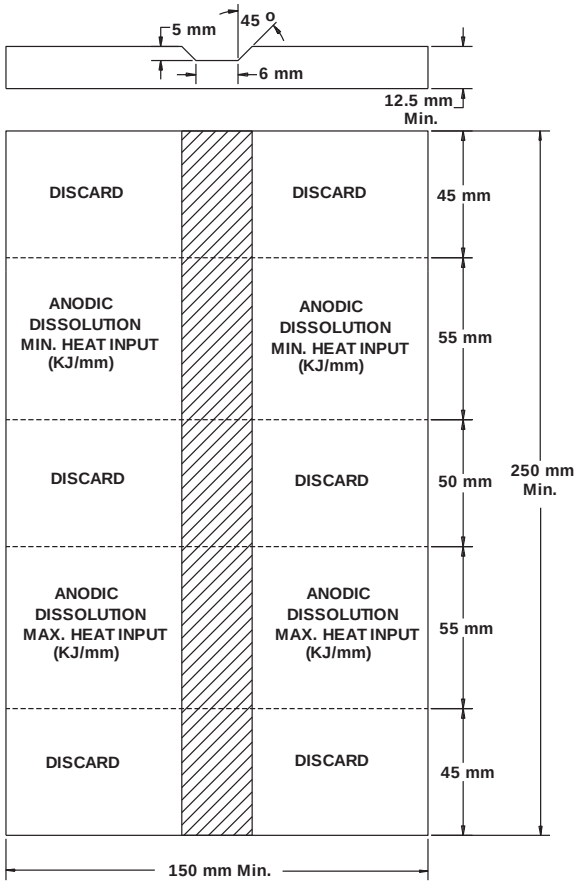

Figure B1 Anodic Dissolution Test Plate Assembly

Welds shall be deposited following a stringer temper bead sequence at the lowest and highest heat input (kj/mm) planned for production as illustrated in Fig. B2 herein. The centre 50 mm discard portion of the test assembly shall be used as a transition between low and high heat input welds (stop/starts).

For automatic welding using the submerged arc welding process, two test assemblies may be used; one for high heat input and the other for low heat input welds. Bead and layer sequences shall be adjusted to offer split layer finish to the weld.

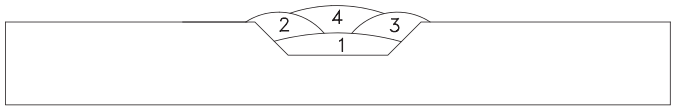

Figure B2 Bead Sequence

B.3 ANODIC DISSOLUTION TESTING

Specimens removed from the test assemblages detailed in Section B2.0 of this Annex shall be prepared by machining as illustrated in Figure B3 herein.

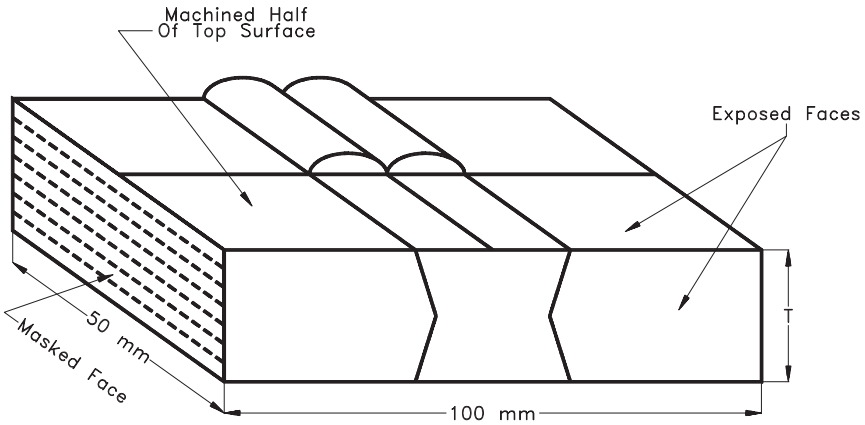

Figure B3 Anodic Dissolution Test Specimen

Each of the specimens shall be corroded at room temperature at a nominal current density of 0.88 mA/cm² for a period of 15 days. The test solution shall be 3.5% NaCl. Intermixing of the anolyte and catholyte shall be prevented by placing a membrane over the opening to the cathode compartment. The test system shall be as illustrated in Figure B4 herein.

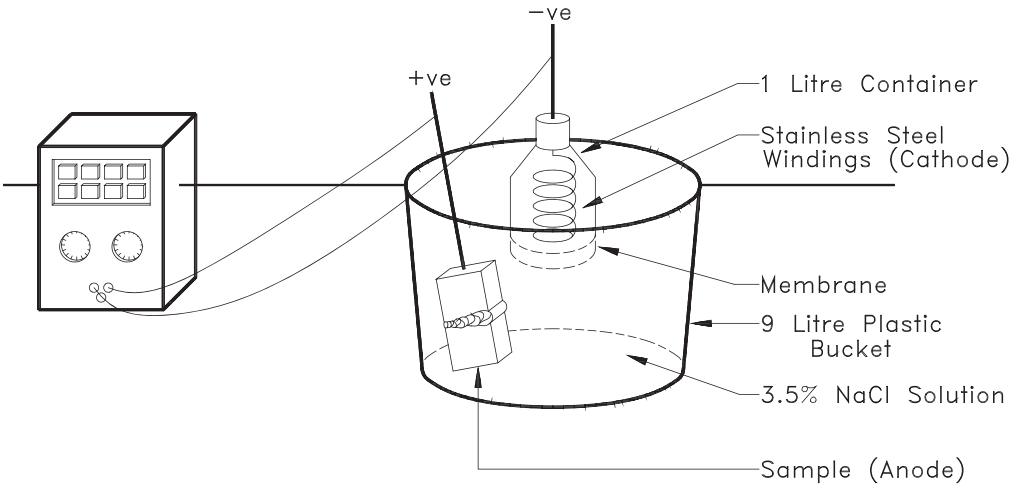

Figure B4 Anodic Dissolution Test System

Anolyte and catholyte pH shall be monitored daily to ensure the membrane is not leaking. Anolyte pH should be in the range of 6 to 8.5 units and anode potentials should be in the range of -600 to -560 mV vs. SCE which are potentials typical of unprotected steel in sea water. When the potential is > -600 mV vs. SCE, daily stirring shall occur to avoid pH stratification of the anolyte.

B.4 REPORTING TEST RESULTS

Mechanical test results, base plate and weld metal chemistries shall be recorded on weld procedure qualification record forms.

Corrosion test results shall be accurately documented and supported by colour photographs and black and white macro examination photo records at 5X magnification.

Corrosion loss shall be quantified by taking a series of profile measurements across the weld zone using a profilometer system having resolution in the "Z" direction of ± 0.0125 mm. The depth of attack shall be well documented for each area of interest in the weld zone; unaffected base plate, heat affected zone and weld metal.

Three copies of the test result reports shall be provided to the Delegated Representative for review and approval of the optimum corrosion resistant weld metal.

Annex C FORMING & THERMAL REQUIREMENTS - ALUMINUM

C.1 HOT FORMING

All hot forming procedures shall be approved by the Delegated Representative in advance of hot forming operations.

The majority of aluminum sections can be formed cold. For severe forming, heat may be used. Maximum holding times for the forming of aluminum alloys at various temperatures are given in Table C1.

Hot forming of 5000 series aluminum alloys is generally conducted at temperatures between 260°C and 425°C. Appropriate temperature control methods are to be used in all hot forming and stress relieving operations. In hot forming or stress relieving, exposure of the 5000 Series alloys to the 65°C to 200°C temperature range is to be minimized by the use of appropriate cooling techniques.

Table C1 Maximum Heat Exposure Time at Temperature Preparatory to Forming Aluminum Alloys

Holding Temperature (Note 1) 0°C	6061-T4, T5 6061-T5, 6063-T5, 356.0-T4, (Note 2)	5454 (Note 3)	5083, 5086, 5154, 5254, 5456
430	NR(4)	50 Hours	50 Hours
260	NR(4)	50 Hours	50 Hours
230	5 Minutes	50 Hours	50 Hours
220	15 Minutes	50 Hours	50 Hours
205	30 Minutes	50 Hours	50 Hours
190	1-2 Hours	50 Hours	NR(4)
175	8-10 Hours	50 Hours	NR(4)
120-165	50 Hours	50 Hours	NR(4)

NOTES:

1. *Equal formability may be obtained with shorter periods of heating at correspondingly higher temperatures. Time at temperature for clad alloys should be kept at a minimum to prevent diffusion of the cladding into the core alloy. Heating should be as rapid as possible, particularly for temperatures 205°C and above. Excessive time to approach the desired temperatures can have deleterious effects similar to those resulting from excess time at temperature.*
2. *Losses in strength for these alloys in the T6 temper will not exceed about 5% when heated at the temperature and for the periods shown. Strength of the T4 temper alloys will increase.*
3. *These alloys will be annealed at 345°C and above.*
4. *NR = Not Recommended*

C.2 COLD FORMING

Cold forming of 5000 series aluminum alloys is to be conducted at temperatures below 50°C, except for the 5454 alloy, where the maximum temperature may be 150°C. When the extent of cold forming is such that base plate properties are changed beyond acceptable limits, appropriate re-heat or stress relief treatments are to be used to re-establish acceptable properties.

APPENDIX 2 STORAGE CONTAINER MARKINGS

The Contactor must meet the requirements identified in Appendix 2.

The contents of Appendix 2 are contained within the following electronic files:

- F7047-160033_AnnexB_Appendix2_Part1.zip; and
- F7047-160033_AnnexB_Appendix2_Part2.zip.

The files are available upon request by e-mailing the Contracting Authority.
Bidders will be required to sign and submit a Non-Disclosure Agreement before they are provided a copy of the files.

ANNEX C

TASK AUTHORIZATION FORM PWGSC-TPSGC 572

Task Authorization
Autorisation de tâche

Instruction for completing the form PWGSC - TPSGC 572 - Task Authorization *(Use form DND 626 for contracts for the Department of National Defence)*	Instruction pour compléter le formulaire PWGSC - TPSGC 572 - Authorization de tâche *(Utiliser le formulaire DND 626 pour les contrats pour le ministère de la Défense)*
Contract Number Enter the PWGSC contract number.	**Numéro du contrat** Inscrire le numéro du contrat de TPSGC.
Contractor's Name and Address Enter the applicable information	**Nom et adresse de l'entrepreneur** Inscrire les informations pertinentes
Security Requirements Enter the applicable requirements	**Exigences relatives à la sécurité** Inscrire les exigences pertinentes
Total estimated cost of Task (Applicable taxes extra) Enter the amount	**Coût total estimatif de la tâche (Taxes applicables en sus)** Inscrire le montant
For revision only	**Aux fins de révision seulement**
TA Revision Number Enter the revision number to the task, if applicable.	**Numéro de la révision de l'AT** Inscrire le numéro de révision de la tâche, s'il y a lieu.
Total Estimated Cost of Task (Applicable taxes extra) before the revision Enter the amount of the task indicated in the authorized TA or, if the task was previously revised, in the last TA revision.	**Coût total estimatif de la tâche (Taxes applicables en sus) avant la révision** Inscrire le montant de la tâche indiquée dans l'AT autorisée ou, si la tâche a été révisée précédemment, dans la dernière révision de l'AT.
Increase or Decrease (Applicable taxes extra), as applicable As applicable, enter the amount of the increase or decrease to the Total Estimated Cost of Task (Applicable taxes extra) before the revision.	**Augmentation ou réduction (Taxes applicables en sus), s'il y a lieu** S'il y a lieu, inscrire le montant de l'augmentation ou de la réduction du Coût total estimatif de la tâche (Taxes applicables en sus) avant la révision.

1. Required Work: Complete sections A, B, C, and D, as required.

A. Task Description of the Work required:

Complete the following paragraphs, if applicable. Paragraph (a) applies only if there is a revision to an authorized task.

(a) Reason for revision of TA, if applicable:
Include the reason for the revision; i.e. revised activities; delivery/completion dates; revised costs. Revisions to TAs must be in accordance with the conditions of the contract. See Supply Manual 3.35.1. 50 or paragraph 6 of the Guide to Preparing and Administering Task Authorizations.

(b) Details of the activities to be performed (include as an attachment, if applicable)

(c) Description of the deliverables to be submitted (include as an attachment, if applicable).

(d) Completion dates for the major activities and/or submission dates for the deliverables (include as an attachment, if applicable).

1. Travaux requis : Remplir les sections A, B, C et D, au besoin.

A. Description de tâche des travaux requis :

Remplir les alinéas suivants, s'il y a lieu : L'alinéa (a) s'applique seulement s'il y a révision à une tâche autorisée.

(a) Motif de la révision de l'AT, s'il y a lieu : Inclure le motif de la révision c.-à.-d., les activités révisées, les dates de livraison ou d'achèvement, les coûts révisés. Les révisions apportées aux AT doivent respecter les conditions du contrat. Voir l'article 3.35. 1.50 du Guide des approvisionnements ou l'alinéa 6 du Guide sur la préparation et l'administration des autorisations de tâches.

(b) Détails des activités à exécuter (joindre comme annexe, s'il y a lieu).

(c) Description des produits à livrer (joindre comme annexe, s'il y a lieu).

(d) Les dates d'achèvement des activités principales et (ou) les dates de livraison des produits (joindre comme annexe, s'il y a lieu).

B. Basis of Payment:
Insert the basis of payment or bases of payment that form part of the contract that are applicable to the task description of the work; e.g. firm lot price, limitation of expenditure, firm unit price

B. Base de paiement :
Insérer la base ou les bases de paiement qui font partie du contrat qui sont applicables à la description du travail à exécuter : p. ex., prix de lot ferme, limitation des dépenses et prix unitaire ferme.

C. Cost of Task:

Insert Option 1 or 2:

Option 1:
Total estimated cost of Task (Applicable taxes extra): Insert the applicable cost elements for the task determined in accordance with the contract basis of payment; e.g. Labour categories and rates, level of effort, Travel and living expenses, and other direct costs.

Option 2:
Total cost of Task (Applicable taxes extra): Insert the firm unit price in accordance with the contract basis of payment and the total estimated cost of the task.

D. Method of Payment
Insert the method(s) of payment determined in accordance with the contract that are applicable to the task; i.e. single payment, multiple payments, progress payments or milestone payments. For milestone payments, include a schedule of milestones.

C. Coût de la tâche :

Insérer l'option 1 ou 2

Option 1 :
Coût total estimatif de la tâche (Taxes applicables en sus) Insérer les éléments applicables du coût de la tâche établies conformément à la base de paiement du contrat. p. ex., les catégories de main d'œuvre, le niveau d'effort, les frais de déplacement et de séjour et autres coûts directs.

Option 2 :
Coût total de la tâche (Taxes applicables en sus) : Insérer le prix unitaire ferme conformément à la base de paiement du contrat et le coût estimatif de la tâche.

D. Méthode de paiement
Insérer la ou les méthode(s) de paiement établit conformément au contrat et qui sont applicable(s) à la tâche; c.-à.-d., paiement unique, paiements multiples, paiements progressifs ou paiements d'étape. Pour ces derniers, joindre un calendrier des étapes.

2. Authorization(s):
The client and/or PWGSC must authorize the task by signing the Task Authorization in accordance with the conditions of the contract. The applicable signatures and the date of the signatures is subject to the TA limits set in the contract. When the estimate of cost exceeds the client Task Authorization's limits, the task must be referred to PWGSC.

3. Contractor's Signature
The individual authorized to sign on behalf of the Contractor must sign and date the TA authorized by the client and/or PWGSC and provide the signed original and a copy as detailed in the contract.

2. Autorisation(s) :
Le client et (ou) TPSGC doivent autoriser la tâche en signant l'autorisation de tâche conformément aux conditions du contrat. Les signatures et la date des signatures appropriées sont assujetties aux limites d'autorisation de tâche établies dans le contrat . Lorsque l'estimation du coût dépasse les limites d'autorisation de tâches du client, la tâche doit être renvoyée à TPSGC.

3. Signature de l'entrepreneur
La personne autorisée à signer au nom de l'entrepreneur doit signer et dater l'AT, autorisée par le client et (ou) TPSGC et soumettre l'original signé de l'autorisation et une copie tel que décrit au contrat.

Public Works and Government Services Canada | Travaux publics et Services gouvernementaux Canada

Annex
Annexe ____

Task Authorization
Autorisation de tâche

Contract Number - Numéro du contrat

Contractor's Name and Address - Nom et l'adresse de l'entrepreneur	Task Authorization (TA) No. - N° de l'autorisation de tâche (AT)
	Title of the task, if applicable - Titre de la tâche, s'il y a lieu
	Total Estimated Cost of Task (Applicable taxes extra) Coût total estimatif de la tâche (Taxes applicables en sus) $

Security Requirements: This task includes security requirements
Exigences relatives à la sécurité : Cette tâche comprend des exigences relatives à la sécurité

☐ No - Non ☐ Yes - Oui

If YES, refer to the Security Requirements Checklist (SRCL) included in the Contract
Si OUI, voir la Liste de vérification des exigences relative à la sécurité (LVERS) dans le contrat

For Revision only - Aux fins de révision seulement

TA Revision Number, if applicable Numéro de révision de l'AT, s'il y a lieu	Total Estimated Cost of Task (Applicable taxes extra) before the revision Coût total estimatif de la tâche (Taxes applicables en sus) avant la révision $	Increase or Decrease (Applicable taxes extra), as applicable Augmentation ou réduction (Taxes applicables en sus), s'il y a lieu $

Start of the Work for a TA : Work cannot commence until a TA has been authorized in accordance with the conditions of the contract.

Début des travaux pour l'AT : Les travaux ne peuvent pas commencer avant que l'AT soit autorisée conformément au contrat.

1. Required Work: - Travaux requis :

A.Task Description of the Work required - Description de tâche des travaux requis — See Attached - Ci-joint ☐

B. Basis of Payment - Base de paiement — See Attached - Ci-joint ☐

C. Cost of Task - Coût de la tâche — See Attached - Ci-joint ☐

D. Method of Payment - Méthode de paiement — See Attached - Ci-joint ☐

Annex
Annexe ____

Contract Number - Numéro du contrat

2. Authorization(s) - Autorisation(s)

By signing this TA, the authorized client and (or) the PWGSC Contracting Authority certify(ies) that the content of this TA is in accordance with the conditions of the contract.

The client's authorization limit is identified in the contract. When the value of a TA and its revisions is in excess of this limit, the TA must be forwarded to the PWGSC Contracting Authority for authorization.

En apposant sa signature sur l'AT, le client autorisé et (ou) l'autorité contractante de TPSGC atteste(nt) que le contenu de cette AT respecte les conditions du contrat.

La limite d'autorisation du client est précisée dans le contrat. Lorsque la valeur de l'AT et ses révisions dépasse cette limite, l'AT doit être transmise à l'autorité contractante de TPSGC pour autorisation.

Name and title of authorized client - Nom et titre du client autorisé à signer

Signature | Date

PWGSC Contracting Authority - Autorité contractante de TPSGC

Signature | Date

3. Contractor's Signature - Signature de l'entrepreneur

Name and title of individual authorized - to sign for the Contractor
Nom et titre de la personne autorisée à signer au nom de l'entrepreneur

Signature | Date

ANNEX 1 to PART 3 OF THE BID SOLICITATION

ELECTRONIC PAYMENT INSTRUMENTS

The Bidder accepts to be paid by any of the following Electronic Payment Instrument(s):

( ) VISA Acquisition Card;

( ) MasterCard Acquisition Card;

( ) Direct Deposit (Domestic and International);

( ) Electronic Data Interchange (EDI);

( ) Wire Transfer (International Only).

Annex D

Technical Bid Evaluation Plan

Environmental Response Equipment Modernization/ Mobile Incident Command Equipment Project

Boom – Curtain – Round Floatation Boom 24”

Section 1 INTRODUCTION

1.1 PURPOSE

This document is the Technical Bid Evaluation Plan which defines the criteria and the scoring system that will be used to evaluate the technical portion of each bid submitted in response to the Solicitation.

1.2 SCOPE

This document and the associated appendix contain a description of the technical evaluation process, identifies all the mandatory requirements to be evaluated, how each requirement will be scored, and defines the information required from the Bidder for its bid to be evaluated.

The technical portion of the bid submitted in response to the Solicitation will be evaluated as detailed within this technical evaluation plan, and the evaluation matrix that is included in Appendix A to this document.

Section 2 TECHNICAL BID EVALUATION

2.1 EVALUATION METHOD

By submitting a bid, the Bidder certifies that it meets all of the requirements of the Solicitation including those identified in the Statement of Work (SOW) and Technical Statement of Requirements (TSOR).

The technical portion of the bid will be evaluated using **Mandatory Criteria**, thus a bid must meet all mandatory criteria specified in Appendix A.

Mandatory criteria (M) are defined as requirements that must be met in order for the bid to be further considered for financial evaluation. Mandatory criteria listed in Appendix A refer to mandatory criteria that will be evaluated on a Compliant/Non-compliant basis only. The bid must provide evidence or substantiation as specified, and that evidence will be evaluated on a Compliant/Non-compliant basis. Failure to meet a mandatory criterion will render the bid non-responsive and it will be given no further consideration. If the bid meets all mandatory criteria, only then will the bid proceed to the financial evaluation performed by the Contracting Authority.

2.2 RESPONDING TO EVALUATION CRITERIA

Bidders must note that this document must be read in the context of the SOW and TSOR to ensure the requirements are fully understood in the context of the section of the SOW and TSOR from which they have been extracted.

For each mandatory criterion, the bid must comply with the criteria stated in **M1** to **M28** inclusively. The bid must clearly demonstrate how each criterion is met through the indicated method of compliance (refer to 2.2.1), and should respond with a 'YES' or 'NO' in the 'Compliant' column. Additionally, the bid should provide the appropriate cross-reference where the information is located in the bid in the 'Bid Cross-Reference' column.

Canada will evaluate only the documentation provided with the bid. Canada will not evaluate information such as references to Web site addresses where additional information can be found, or technical manuals or brochures not submitted with the bid.

2.2.1 Method of Compliance

The following methods, as indicated in the "Method of Compliance" column of Appendix A, will be used to define the minimum information required in the bid against each requirement:

Technical Drawing: The bid must provide a visual representation of the specified piece of equipment (rendered to scale) that defines all the requirements needed for its manufacture or fabrication to illustrate how the proposed equipment fully complies with the requirement.

Description: The bid must provide a description (including, though not limited to, qualities and characteristics) of the specified piece of equipment, management system, or procedure to illustrate in detail how it fully complies with the requirement.

Bill of Materials: The bid must provide a bill of materials, including all parts, sub-assemblies, and components, as well as a brief description and quantity of each item used for the specified piece of equipment that pertains to the complementary drawing. The bill of materials will be used to illustrate how the proposed equipment fully complies with the requirement.

Specification: The bid must provide a detailed technical description of the specified piece of equipment, including, though not limited to physical dimensions and material properties of the equipment, to illustrate how the proposed equipment fully complies with the requirement.

Data Analysis: The bid must provide a detailed technical or engineering analysis in sufficient detail to demonstrate how the proposed equipment fully complies with the requirement.

Certification: The bid must provide an official document produced by a registered or accredited body that provides verification of the performance and/or manufacturing process of the specified piece of equipment (or individual components) to demonstrate how the proposed equipment fully complies with the requirement.

Invoice: The bid must provide copies of applicable invoices listing the goods provided including the following:

- Dates invoices were issued;
- Dates of deliveries of goods;
- Company name(s) or Government organization(s); and
- Associated quantities of goods sold.

Quality Acceptance Letter: The bid must provide a letter of reference from the customer who previously purchased produced goods from the Bidder which details, at a minimum, the delivery and quality acceptance of the goods in question. The letter must provide a brief description of the work performed, and time (month/year) at which the contract was awarded and completed. The letter must be produced on company

letterhead, include a phone number and/or email address which can be used to contact the customer, and be signed by an authorized representative of the company.

APPENDIX A MANDATORY CRITERIA

Item	Mandatory Criteria	Evaluation Factor or Reference	Evaluation	Method of Compliance	Compliant? Yes/No	Bid Cross Reference
M1	The nominal height of each curtain boom section must be no less than 22 inches (in) and no larger than 24 in.	TSOR 3.3.1.4	Verification of curtain boom design and how the specified requirement is achieved.	Technical Drawing AND Bill of Materials.		
M2	The cross-section of each floatation element must be circular, with a constant nominal diameter no less than 6 in and no larger than 8 in.	TSOR 3.3.3.3	Verification of curtain boom design and how the specified requirement is achieved.	Technical Drawing AND Bill of Materials.		
M3	Each floatation element fitted between the end of a curtain boom section and a fold point, or two fold points must be a single, continuous extrusion.	TSOR 3.3.3.4	Verification of the internal construction of the curtain boom floats	Technical Drawing AND Description		
M4	The ends of each floatation element must facilitate flaking without adversely affecting the freeboard of the curtain boom sections (e.g., beveled ends).	TSOR 3.3.3.6	Verification of curtain boom design and how the specified requirement is achieved.	Technical Drawing AND Bill of Materials AND Description		
M5	Each curtain boom section must be constructed with a fully enclosed pocket to house the ballast chain tension member.	TSOR 3.3.4.7	Verification of the ballast chain tension member pocket requirements.	Technical Drawing AND Bill of Materials.		

Item	Mandatory Criteria	Evaluation Factor or Reference	Evaluation	Method of Compliance	Compliant? Yes/No	Bid Cross Reference
M6	The ballast chain tension member pocket must be double-layered (at a minimum) to protect against abrasion.	TSOR 3.3.4.9	Verification of the ballast chain tension member pocket requirements.	Technical Drawing		
M7	Both longitudinal ends of each curtain boom section must incorporate the connector and cross-pin construction defined in the following Standard: ASTM F962-04 (2010), Standard Specification for Oil Spill Response Connection: **Z-Connector**. Canada will specify which type of ASTM end connector must be fitted to each curtain boom section.	TSOR 3.3.5.1	Verification of the dimensions and components of the end connectors.	Technical Drawing AND Description		
M8	Both longitudinal ends of each curtain boom section must incorporate the connector and cross-pin construction defined in the following Standard: ASTM F2438-04 (2017), Standard Specification for Oil Spill Response Boom Connection: **Slide Connector**. Canada will specify which type of ASTM end connector must be fitted to each curtain boom section.	TSOR 3.3.5.1	Verification of the dimensions and components of the end connectors.	Technical Drawing AND Description		

Item	Mandatory Criteria	Evaluation Factor or Reference	Evaluation	Method of Compliance	Compliant? Yes/No	Bid Cross Reference
M9	Any mechanical attachment point between the curtain boom material and the end connectors must minimize stress concentrations that could result in excessive abrasion or tearing.	TSOR 3.3.5.2	Verification of curtain boom design and how the specified requirement is achieved.	Technical Drawing AND Description		
M10	Each 50 ft curtain boom section must contain a minimum of one anchor point.	TSOR 3.3.6.1	Verification of curtain boom anchor points.	Technical Drawing		
M11	Each webbing handle must be attached to the top tension member using a seam construction (i.e., seam type, width, and stitching pattern) that allows the webbing handle to support (at a minimum) 200 pounds (lb) without permanent set, tearing, or elongation.	TSOR 3.3.6.6	Verification of curtain boom webbing handles requirements.	Technical Drawing AND Description		
M12	The buoyancy to weight ratio of each curtain boom section must be a minimum of 6-to-1.	TSOR 3.3.7.1	Verification of the calculation of the buoyancy ratio of a single section of boom.	Specification AND Data Analysis		
M13	The curtain boom fabric must have the minimum mechanical properties listed in Table 1(of Annex B) when tested in accordance with ASTM D751-06 (2011), Standard Test Methods for Coated Fabrics.	TSOR 3.3.7.2	Verification of curtain boom fabric requirements.	Materials Specification		

Item	Mandatory Criteria	Evaluation Factor or Reference	Evaluation	Method of Compliance	Compliant? Yes/No	Bid Cross Reference
M14	The tensile strength of the webbing top tension member must be a minimum of 8,000 lb when tested in accordance with ASTM D6775-13, Standard Test Method for Breaking Strength and Elongation of Textile Webbing, Tape, and Braided Material.	TSOR 3.3.7.3	Verification of the tensile strength of the webbing top tension member.	Materials Specification		
M15	The total tensile strength of each curtain boom section must be a minimum of 10,000 lb when tested in accordance with ASTM F1093-99 (2012), Standard Test Methods for Tensile Strength Characteristics of Oil Spill Response Boom.	TSOR 3.3.7.5	Verification of the tensile strength of a complete section of boom.	Specification AND Data Analysis		
M16	The curtain boom fabric must consist of a polyester substrate and a polyvinyl chloride (PVC) topcoat.	TSOR 3.3.8.3	Verification of curtain boom fabric requirements.	Specification		
M17	The surface density of the curtain boom fabric must be a minimum of 22 ounces per square yard (oz/yd^2).	TSOR 3.3.8.4	Verification of curtain boom fabric requirements.	Specification		
M18	All integral flotation elements must be fabricated from closed-cell, polyethylene foam.	TSOR 3.3.8.6	Verification of floatation element material requirements.	Specification		
M19	All end connectors must be extruded from aluminum alloy 6061-T6 as per ASTM B221-14, Standard Specification for Aluminum and Aluminum-Alloy Extruded Bars, Rods, Wire, Profiles, and Tube.	TSOR 3.3.8.11	Verification of end connector material requirements.	Specification		

Item	Mandatory Criteria	Evaluation Factor or Reference	Evaluation	Method of Compliance	Compliant? Yes/No	Bid Cross Reference
M20	All curtain boom fabric seams must be radio-frequency (RF) welded.	TSOR 3.3.9.1	Verification of curtain boom seam construction	Description		
M21	Each tow paravane must ensure that the curtain boom maintains a vertical attitude under tow.	TSOR 3.4.3.1	Verification of the performance of the tow paravane.	Technical Drawing AND Description		
M22	All attachments and hardware fitted to the tow paravane must withstand the minimum tensile strength specified in 3.4.2.2.	TSOR 3.4.3.10	Verification of the ability of the curtain boom to retain original freeboard while being towed using the paravane.	Technical Drawing AND Description		
M23	The minimum cumulative holding power of the five fluke-style, patent anchors must be sufficient to keep the length of curtain boom specified in 3.3.1.1 in a fixed position (given the water body type specified in 3.1.1.5 and a silt bed).	TSOR 3.4.5.3	Verification of the curtain boom anchor kit requirements.	Data Analysis		
M24	Any storage container supplied by the Respondent must be an off-the-shelf item.	TSOR 3.5.1.1	Verification of the storage container requirements.	Technical Drawing		
M25	The storage container must conform to the dimensions (and tolerances) listed in Table 2 (of Annex B).	TSOR 3.5.1.1	Verification of the storage container requirements.	Technical Drawing		

Item	Mandatory Criteria	Evaluation Factor or Reference	Evaluation	Method of Compliance	Compliant? Yes/No	Bid Cross Reference
M26	Unless otherwise specified by Canada, all supplied rigging equipment must conform to the requirements defined in the following Standards: a) SOR/2007 128, Cargo, Fumigation, and Tackle Regulations; b) ASME B30.26-2015: Rigging Hardware; and c) ASME B30.9-2014: Slings.	TSOR 3.5.6.2	Verification of the characteristics of the rigging equipment.	Certification		
M27	The Respondent's Quality Management System must comply with the requirements of: ISO 9001:2015 - Quality Management Systems as specified in the SOW.	SOW 3.2	Verification of the Respondent's quality management systems with reference to the stipulated ISO 9001:2015 standards.	Description AND Certification		

Item	Mandatory Criteria	Evaluation Factor or Reference	Evaluation	Method of Compliance	Compliant? Yes/No	Bid Cross Reference
M28	The Respondent must have successfully* provided curtain boom for two (2) different customers with each contract containing the following terms: (a) Deliveries made after January 1, 2008; (b) Delivery of a minimum of 25,000 ft. of curtain boom; (c) Customer must be from one of the following categories: (1) Oil and Gas Industry; (2) Marine Spill Response Organization; or (3) Government Department / Agency. * met delivery and quality requirements as stipulated in the contract	Proven recent experience	Verification of the Respondent's recent experience conducting large-scale asset procurements with different customers.	Invoice for each completed contract AND Quality Acceptance Letter for each completed contract		

ANNEX 1 to PART 5 OF THE BID SOLICITATION

FEDERAL CONTRACTORS PROGRAM FOR EMPLOYMENT EQUITY – CERTIFICATION

I, the Bidder, by submitting the present information to the Contracting Authority, certify that the information provided is true as of the date indicated below. The certifications provided to Canada are subject to verification at all times. I understand that Canada will declare a bid non-responsive, or will declare a contractor in default, if a certification is found to be untrue, whether during the bid evaluation period or during the contract period. Canada will have the right to ask for additional information to verify the Bidder's certifications. Failure to comply with any request or requirement imposed by Canada may render the bid non-responsive or constitute a default under the Contract.

For further information on the Federal Contractors Program for Employment Equity visit Employment and Social Development Canada (ESDC) – Labour's website.

Date:_____(YYYY/MM/DD) (If left blank, the date will be deemed to be the bid solicitation closing date.)

Complete both A and B.

A. Check only one of the following:

( ) A1. The Bidder certifies having no work force in Canada.

( ) A2. The Bidder certifies being a public sector employer.

( ) A3. The Bidder certifies being a federally regulated employer being subject to the *Employment Equity Act*.

( ) A4. The Bidder certifies having a combined work force in Canada of less than 100 permanent full-time and/or permanent part-time employees.

A5. The Bidder has a combined workforce in Canada of 100 or more employees; and

( ) A5.1. The Bidder certifies already having a valid and current Agreement to Implement Employment Equity (AIEE) in place with ESDC-Labour.

OR

( ) A5.2. The Bidder certifies having submitted the Agreement to Implement Employment Equity (LAB1168) to ESDC-Labour. As this is a condition to contract award, proceed to completing the form Agreement to Implement Employment Equity (LAB1168), duly signing it, and transmit it to ESDC-Labour.

B. Check only one of the following:

( ) B1. The Bidder is not a Joint Venture.

OR

( ) B2. The Bidder is a Joint venture and each member of the Joint Venture must provide the Contracting Authority with a completed annex Federal Contractors Program for Employment Equity - Certification. (Refer to the Joint Venture section of the Standard Instructions).