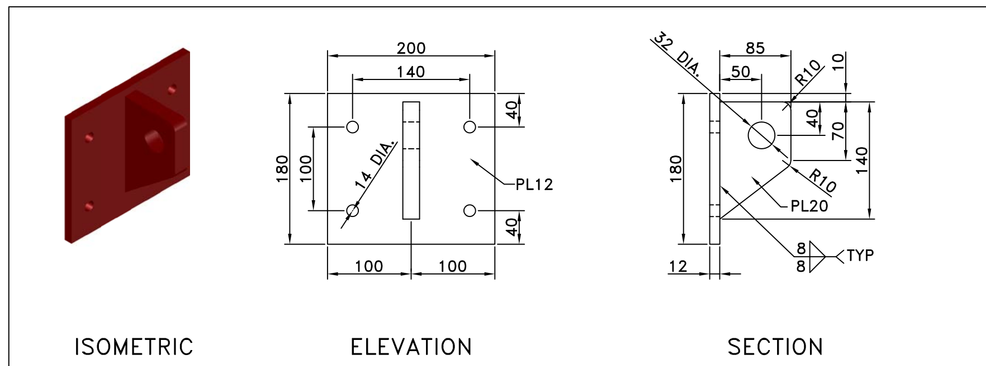

HINGE H1
SCALE: 1:5

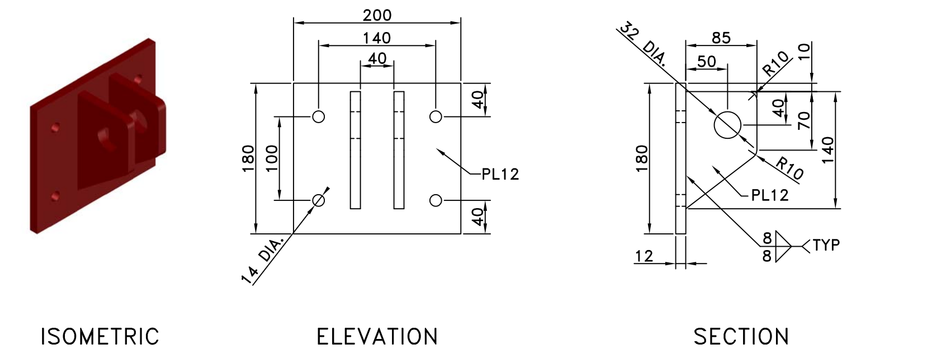

HINGE H2
SCALE: 1:5

NOTE:
HINGE H2 c/w 30 DIA. MACH. BOLT, NUT H.D.
COTTER PIN AND 2 – 10 THK. PLASTIC BUSHINGS

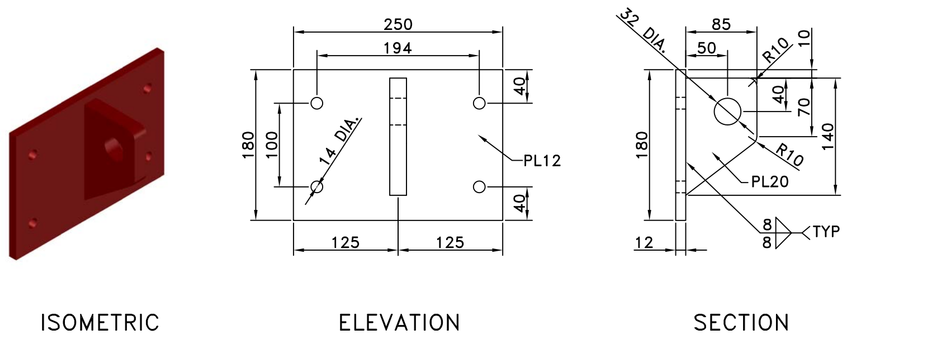

HINGE H3
SCALE: 1:5

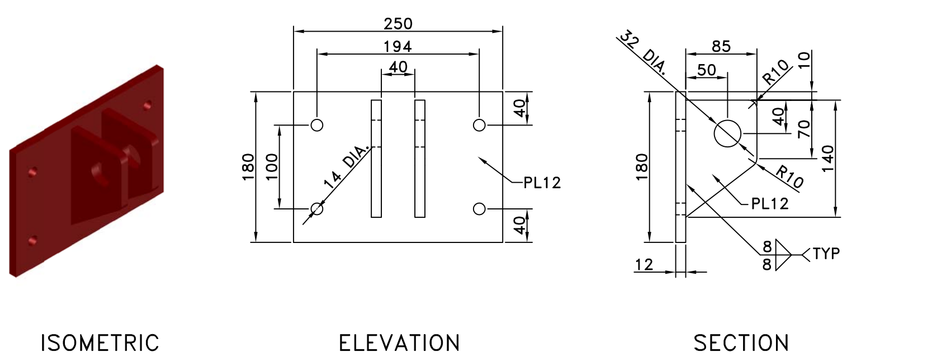

HINGE H4
SCALE: 1:5

NOTE:
HINGE H4 c/w 30 DIA. MACH. BOLT, NUT H.D.
COTTER PIN AND 2 – 10 THK. PLASTIC BUSHINGS

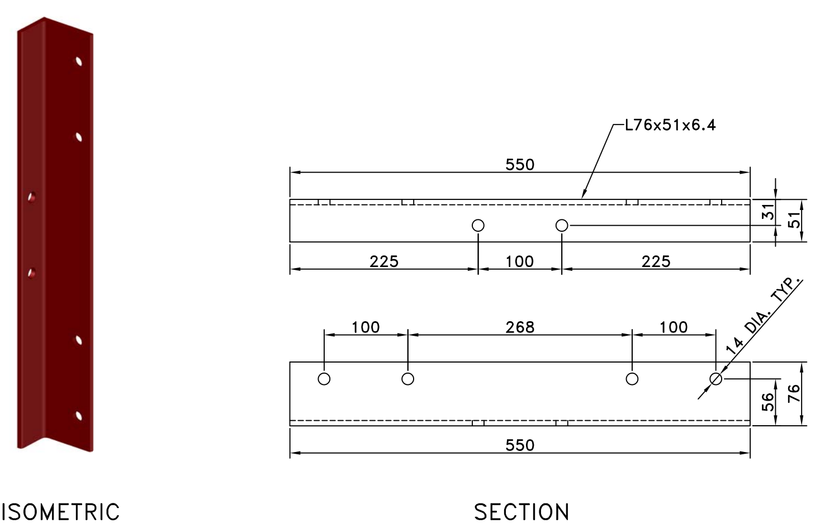

BRACKET B4 – FENDER BRACE
SCALE: 1:5

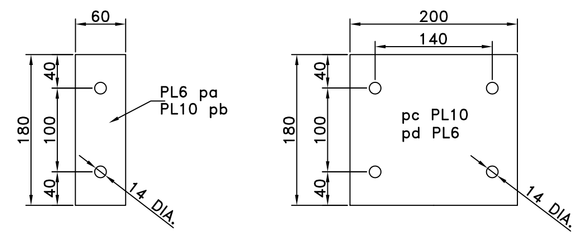

PLATE WASHERS
SCALE: 1:5

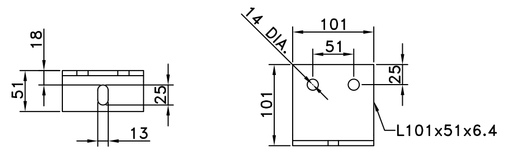

TUB MOUNTING BRACKET
SCALE: 1:5

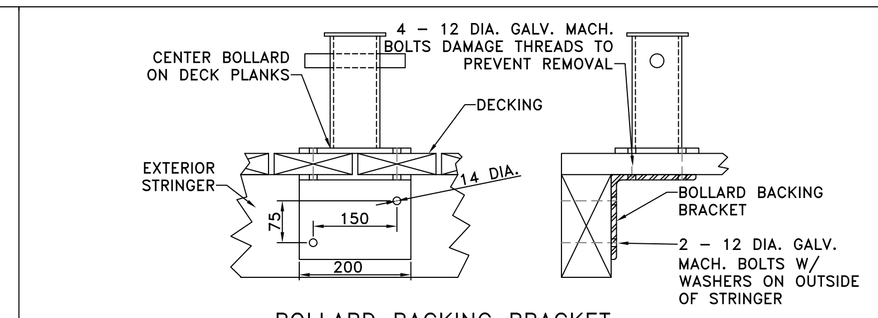

BOLLARD BACKING BRACKET
SCALE: 1:5

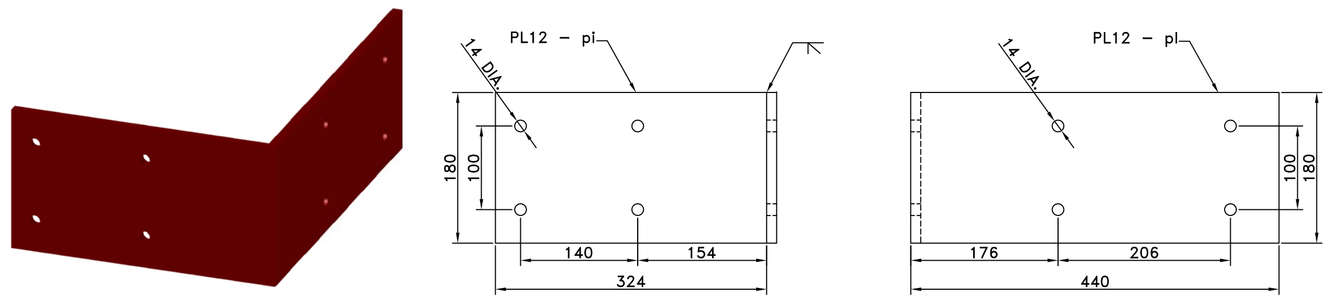

BRACKET B5 r/l
SCALE: 1:5

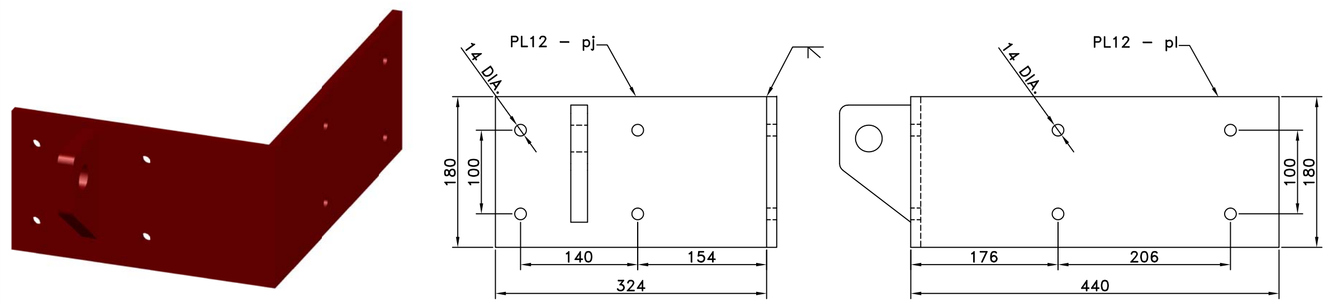

BRACKET B6 r/l
(SEE DETAIL "HINGE H1")
SCALE: 1:5

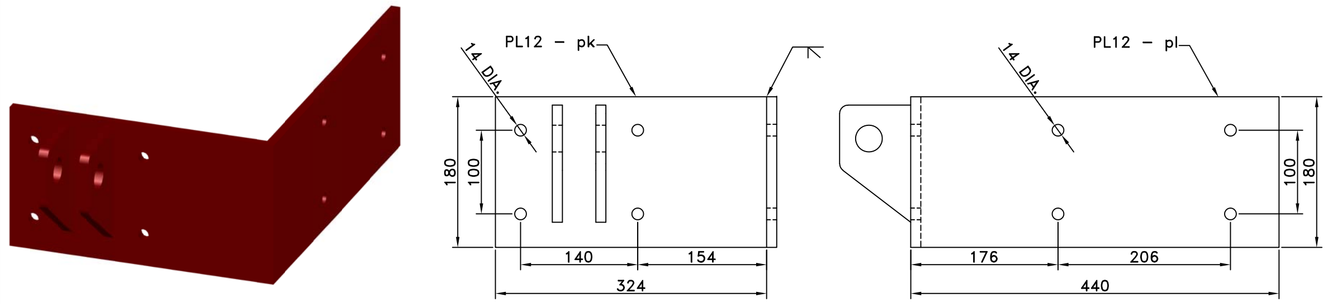

BRACKET B7 r/l
(SEE DETAIL "HINGE H2")
SCALE: 1:5

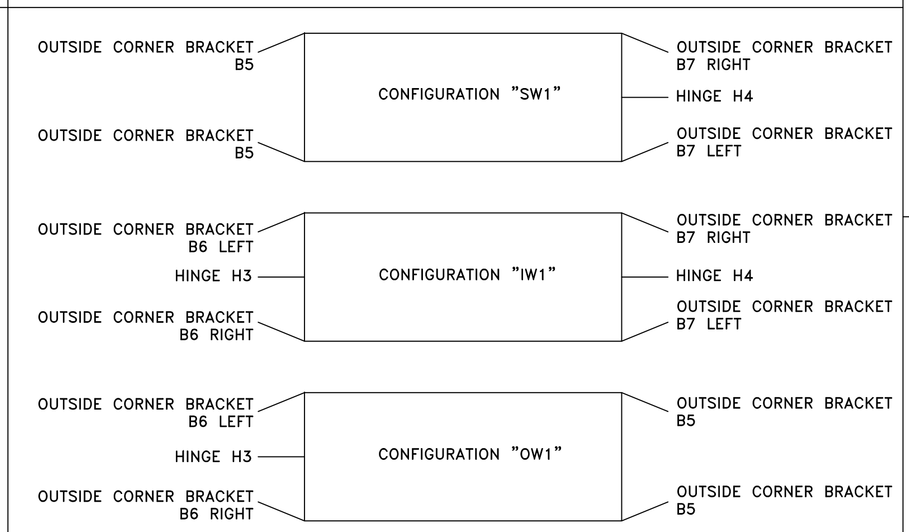

FLOAT HINGE CONFIGURATIONS
SCALE: N.T.S

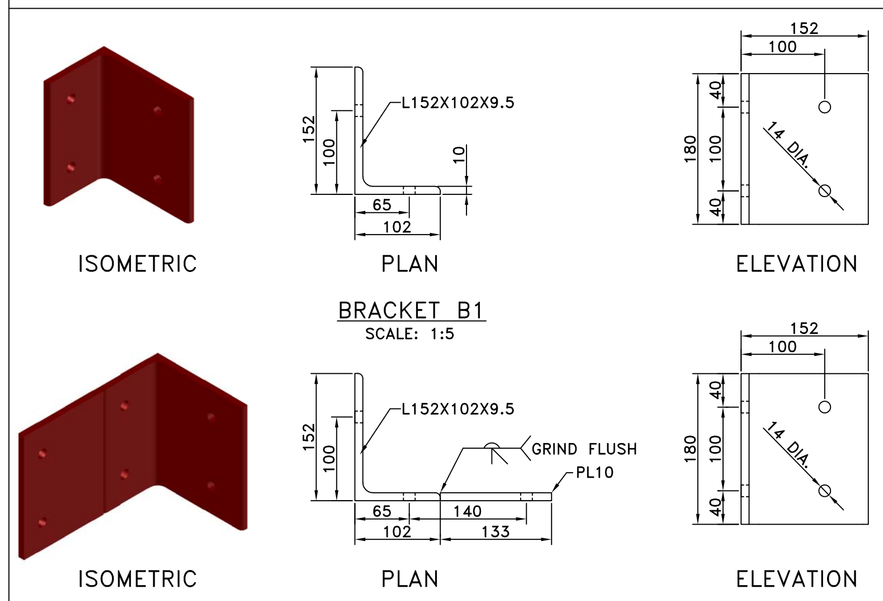

BRACKET B1
SCALE: 1:5

BRACKET B2
SCALE: 1:5

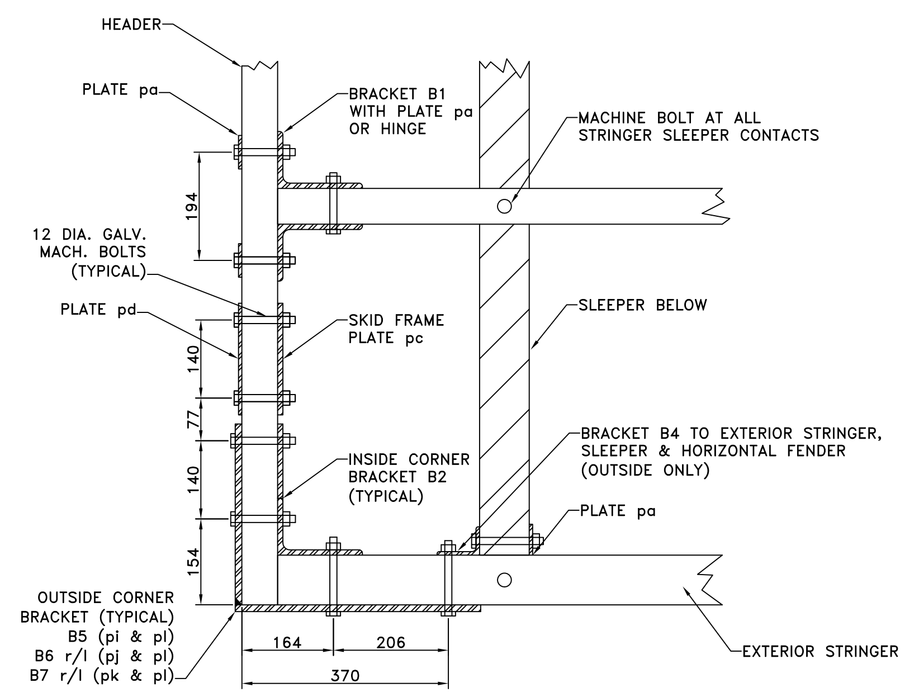

CONNECTION DETAILS
SCALE: 1:7.5

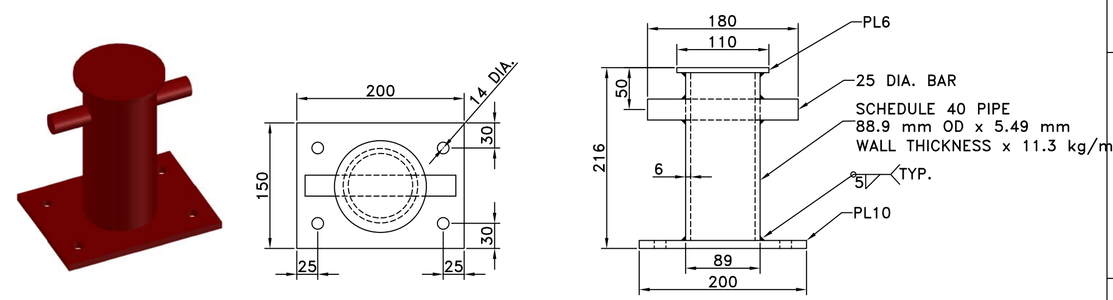

BOLLARD DETAILS
SCALE: 1:5

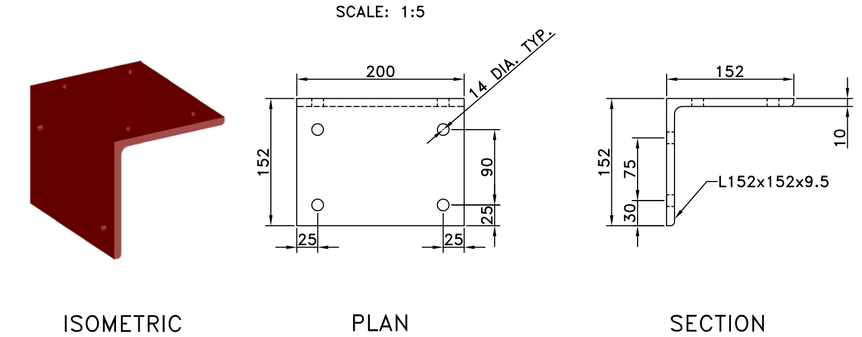

BOLLARD BACKING BRACKET
SCALE: 1:5

GOVERNMENT OF CANADA — GOUVERNEMENT DU CANADA
FISHERIES AND OCEANS — PÊCHES ET OCÉANS

SMALL CRAFT HARBOURS
CENTRAL AND ARCTIC REGION

NOTES:

1. DIMENSIONS ARE IN MILLIMETRES UNLESS OTHERWISE STATED
2. CONTRACTOR TO SHOP PAINT ALL STEEL HARDWARE WITH 2 COATS OF RED RUST INHIBITOR PAINT

REVISIONS:		DATE:
0	ISSUED FOR TENDER	NOV. 9, 2017

SCALE: AS SHOWN	CLASS:
PROJECT: HARBOUR REVITALIZATION	
DESCRIPTION: 2.7m x 7.9m FLOATS CONNECTION DETAILS	
DRAWN: S.K	APPROVED: A.B
DATE: AUG. 2016	DATE: AUG. 2016
LOCATION: WHITEFISH POINT MANITOBA	
DRAWING NO.: C-6 OF 6	LOCATOR CODE: 5563