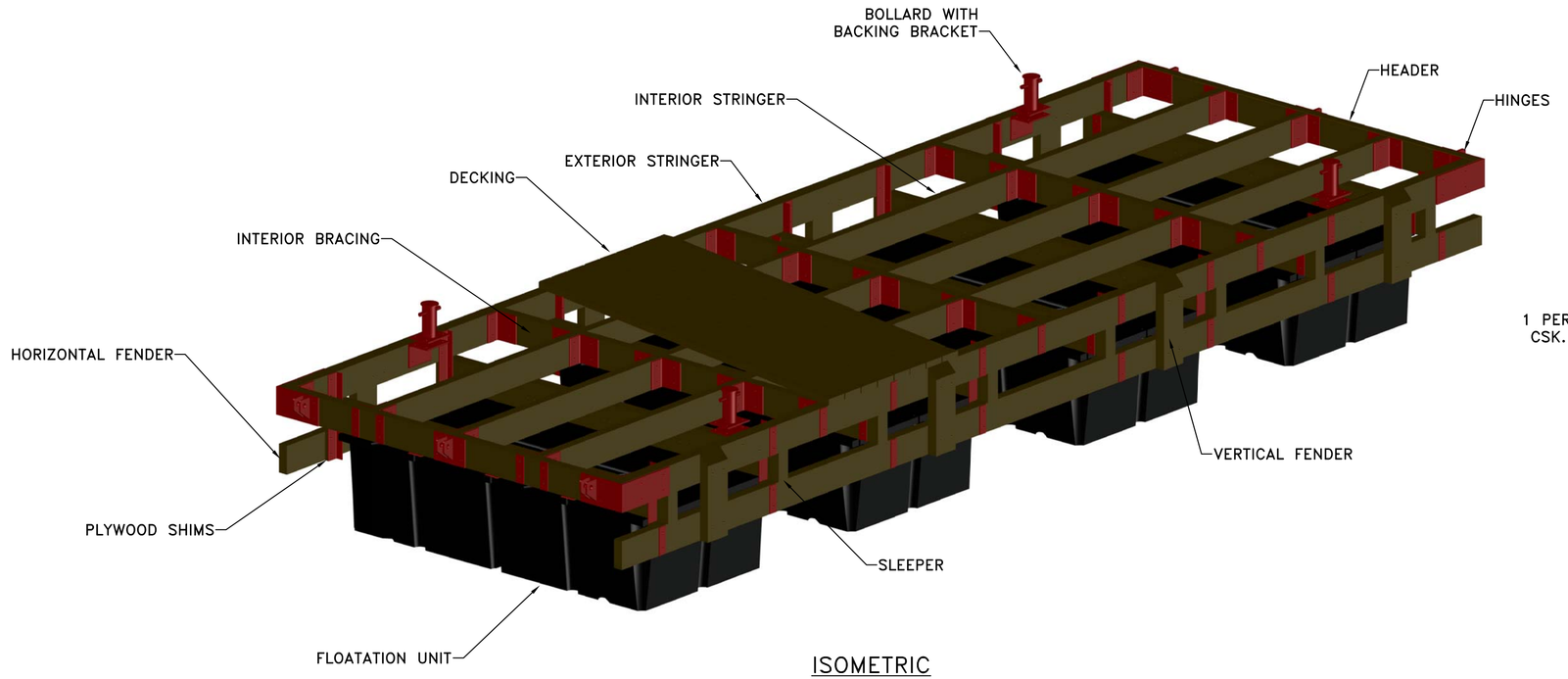

ISOMETRIC
SCALE: 1:25

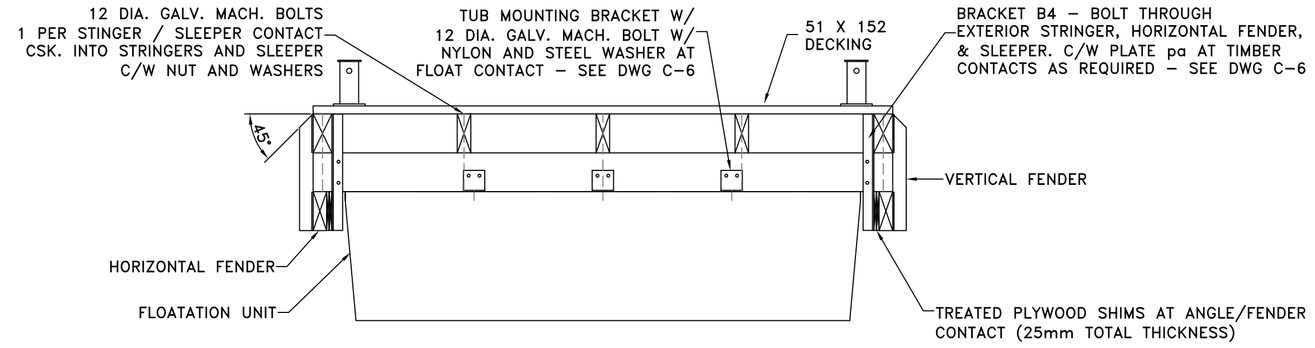

SECTION A–A
SCALE: 1:20

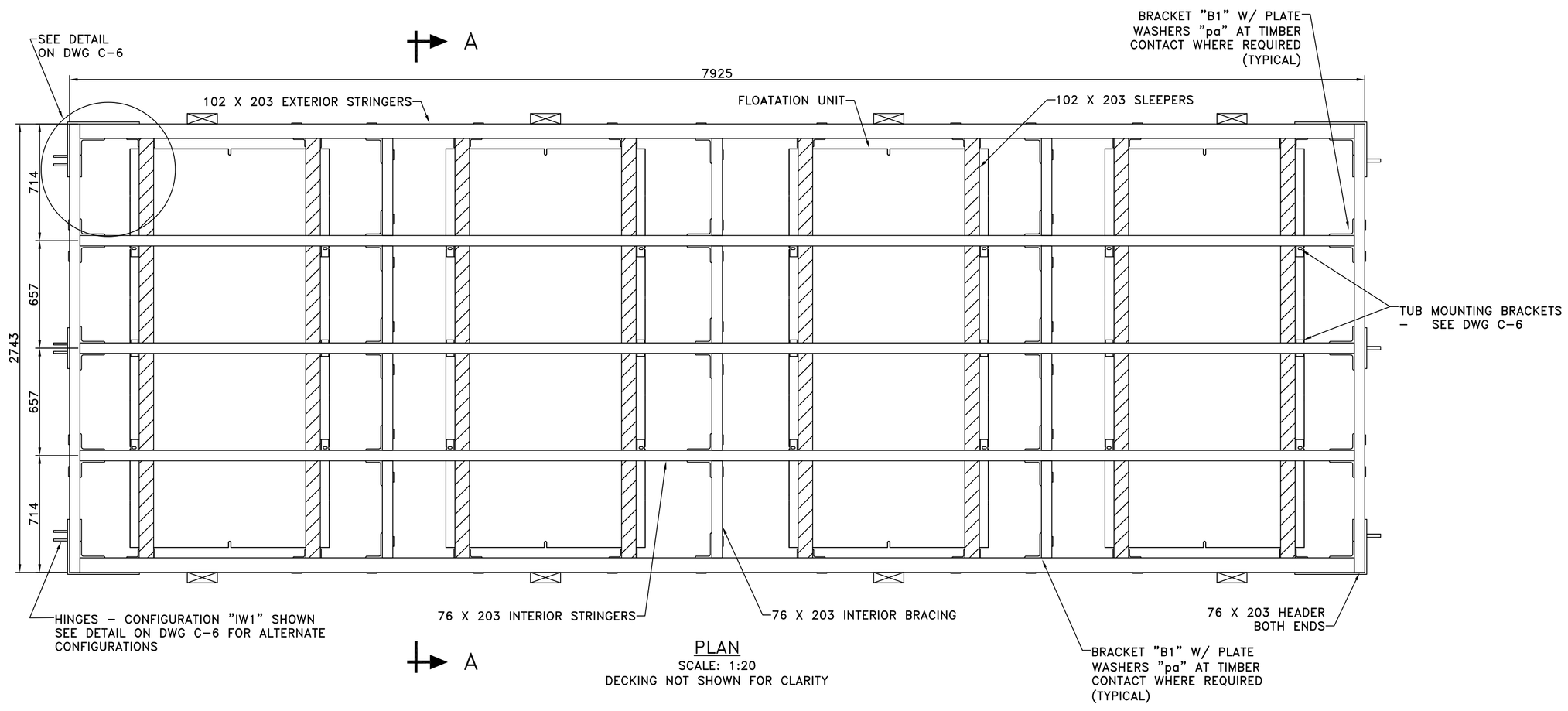

PLAN
SCALE: 1:20
DECKING NOT SHOWN FOR CLARITY

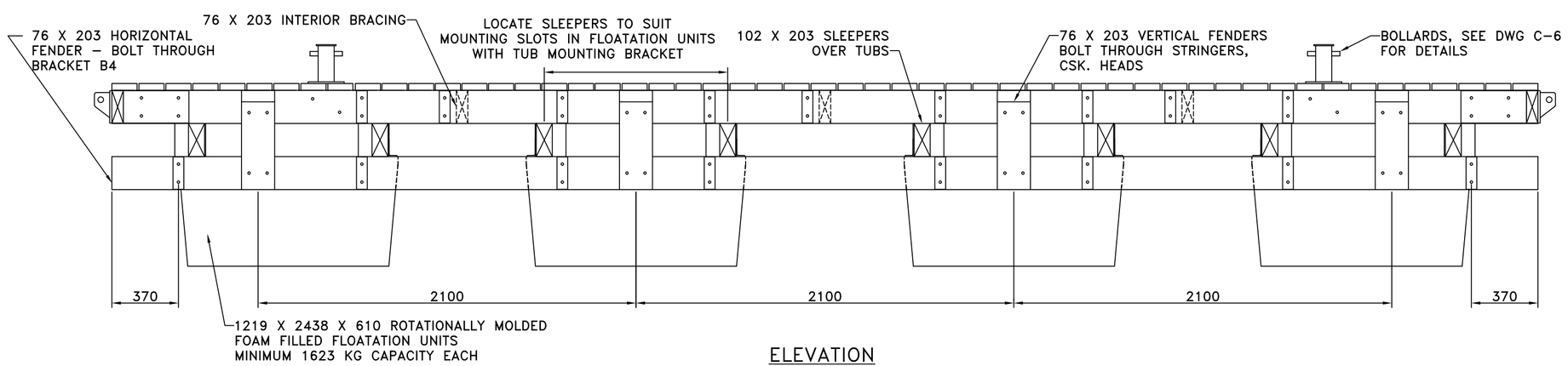

ELEVATION
SCALE: 1:20

GOVERNMENT OF CANADA / GOUVERNEMENT DU CANADA
FISHERIES AND OCEANS / PÊCHES ET OCÉANS

SMALL CRAFT HARBOURS
CENTRAL AND ARCTIC REGION

NOTES:

1. DIMENSIONS ARE IN MILLIMETRES UNLESS OTHERWISE STATED
2. CONTRACTOR TO SHOP PAINT ALL STEEL HARDWARE WITH 2 COATS OF RED RUST INHIBITOR PAINT

REVISIONS:		DATE:
0	ISSUED FOR TENDER	NOV. 9, 2017

SCALE: AS SHOWN
CLASS:

PROJECT: HARBOUR REVITALIZATION

DESCRIPTION: CONSTRUCTION DETAILS – 2.7m x 7.9m FLOAT WHARF

DRAWN: S.K
APPROVED: A.B
DATE: AUG. 2016
DATE: AUG. 2016

LOCATION: WHITEFISH POINT MANITOBA

DRAWING NO.: C-5 of 6
LOCATOR CODE: 5563