NOTE:
1. CONSTRUCTION SIMILAR TO 2743 x 7925 FLOAT SHOWN ON DRAWINGS C-5 AND C-6.
2. PROVIDE 3 BOLLARDS ON ANGLE FLOAT. SEE DETAIL ON DRAWING C-6.

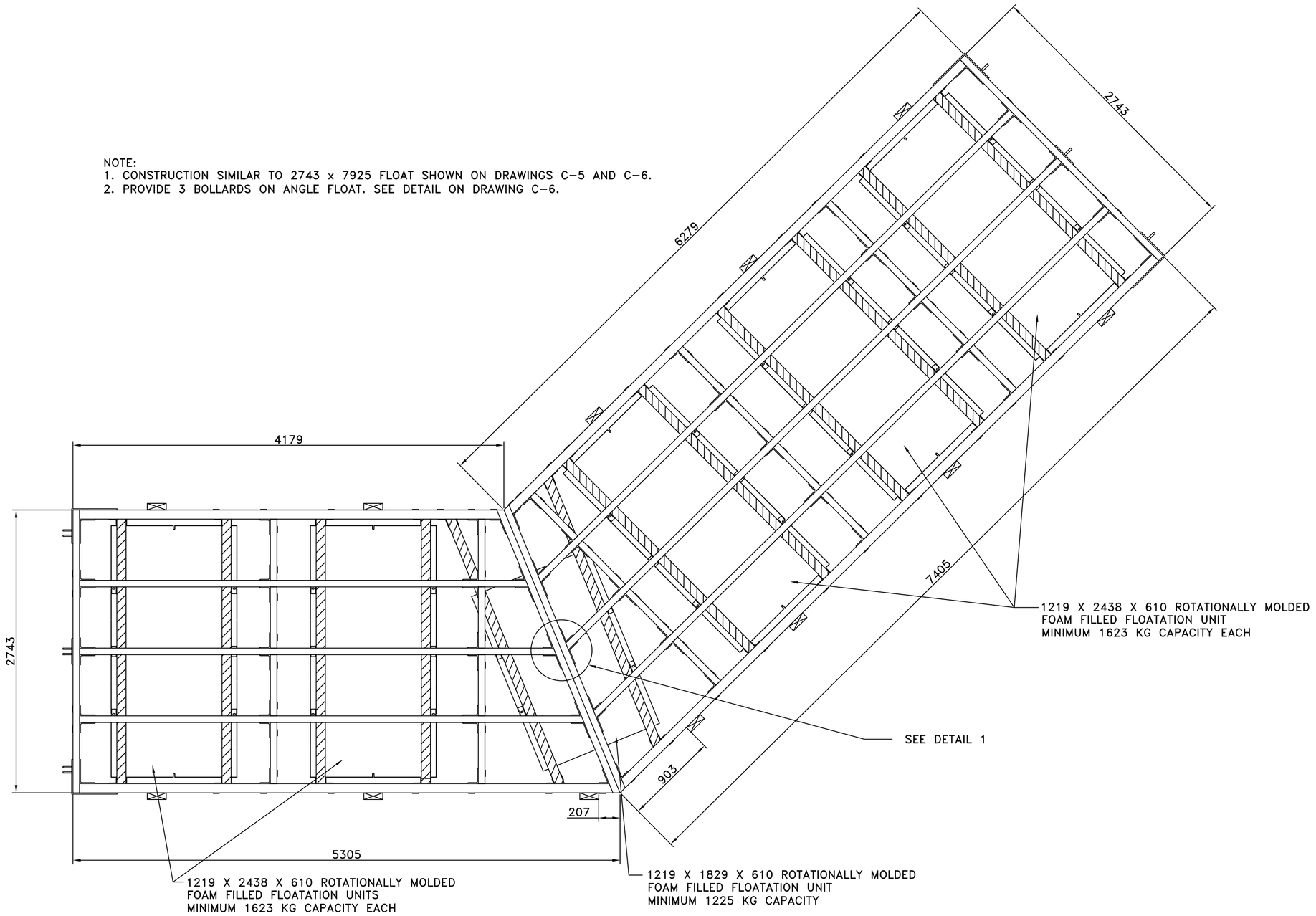

PLAN VIEW – ANGLE FLOAT
SCALE: 1:30

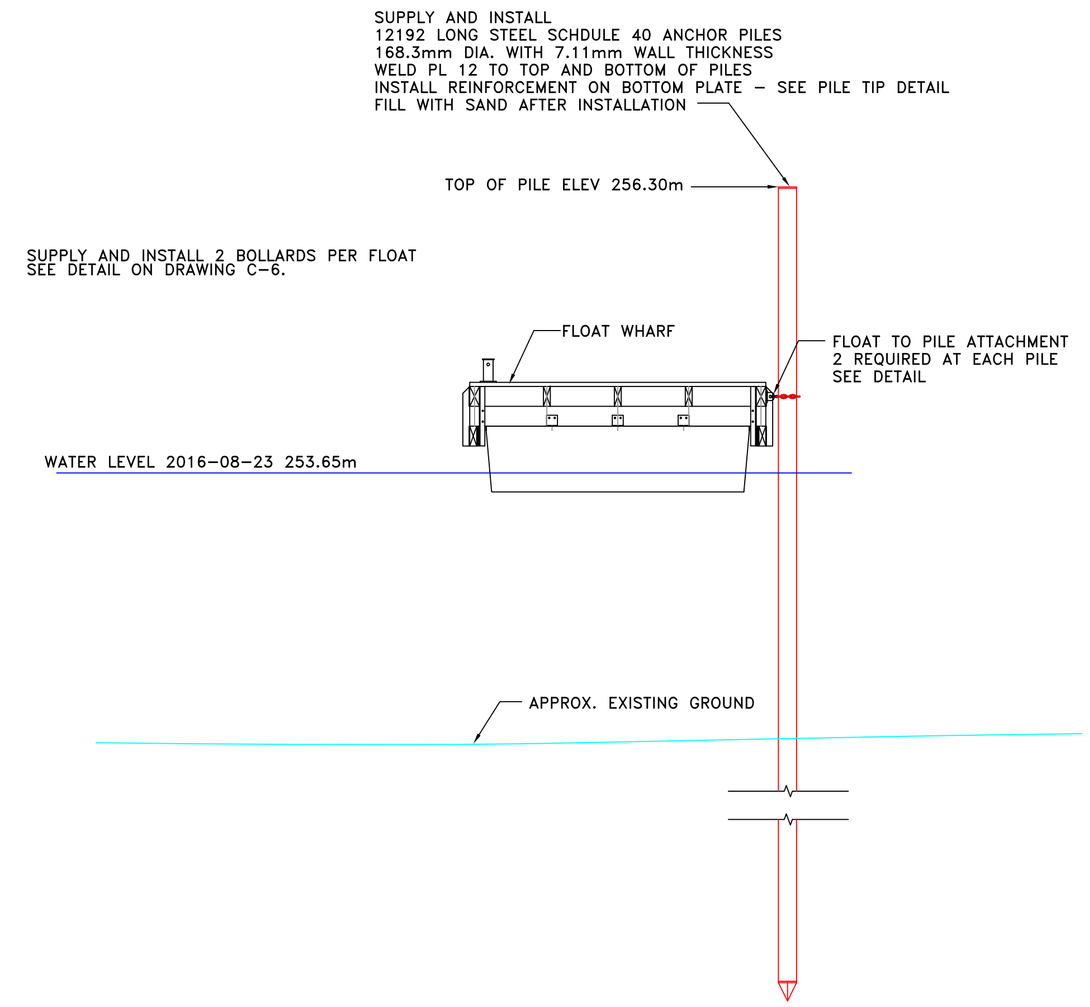

PILE INSTALLATION DETAIL
SCALE: 1:40

NOTE:
1. BRACKETS S1 AND S2 SIMILAR TO BRACKET BI ON DRAWING C-5
2. FABRICATE BRACKETS TO MATCH ANGLE ON FLOAT WHARF
3. CONFIRM DISTANCE TO BOLT HOLES BEFORE FABRICATING BRACKET

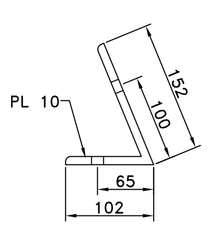

BRACKET S1
SCALE: 1:5

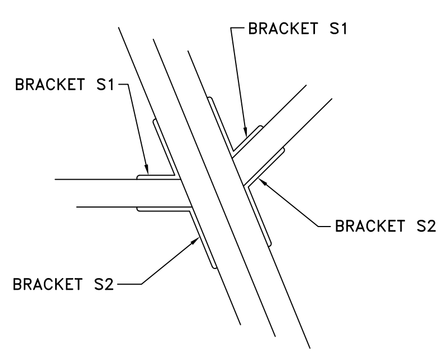

DETAIL 1
SCALE: 1:10

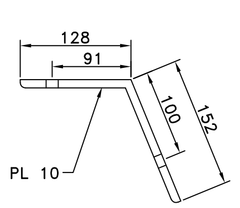

BRACKET S2
SCALE: 1:5

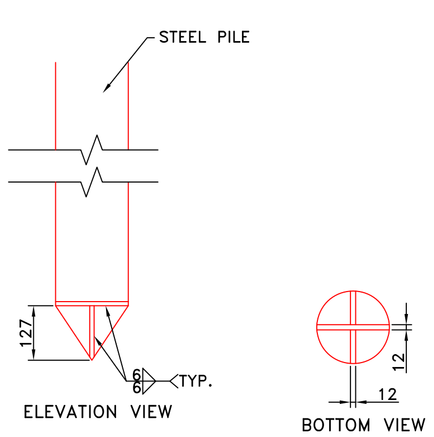

PILE TIP DETAIL
SCALE: 1:10

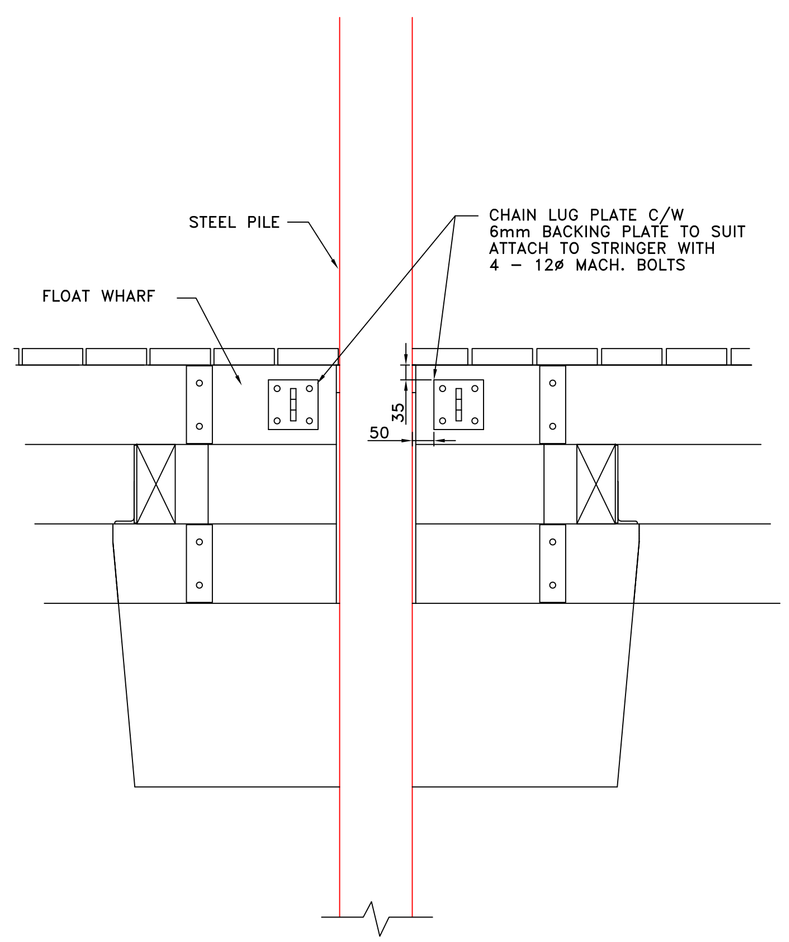

FLOAT TO PILE ATTACHMENT DETAIL
SCALE: 1:10

NOTES:

1. CONTRACTOR TO SUPPLY ALL HARDWARE
2. ALL HARDWARE TO BE COATED WITH 2 COATS RED SHOP PRIMER
3. SUPPLY 6mm BACKING PLATE TO MATCH

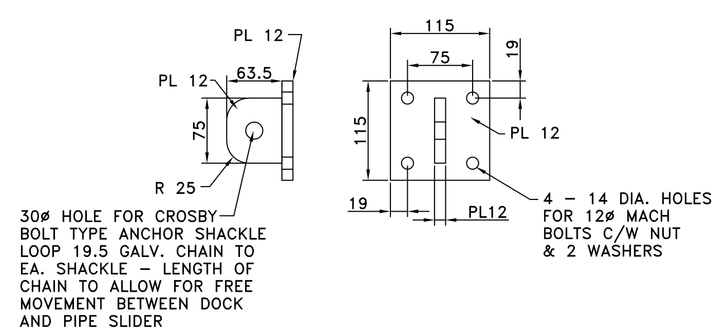

FLOAT TO PILE ATTACHMENT
SCALE: 1:5

GOVERNMENT OF CANADA / GOUVERNEMENT DU CANADA
FISHERIES AND OCEANS / PÊCHES ET OCÉANS

SMALL CRAFT HARBOURS
CENTRAL AND ARCTIC REGION

NOTES:

1. ALL DIMENSIONS ARE IN MILLIMETRES UNLESS OTHERWISE STATED
2. ALL TIMBER TO BE ROUGH SAWN
3. DECKING TO BE ROUGH SAWN SIZED
4. ELEVATIONS SHOWN ARE IN METRES
5. ALL WELDS TO BE 6mm CONTINUOUS FILLET WELDS UNLESS OTHERWISE NOTED

REVISIONS:		DATE:
0	ISSUED FOR TENDER	NOV. 9, 2017

SCALE: AS SHOWN
CLASS:

PROJECT: HARBOUR REVITALIZATION

DESCRIPTION: CONSTRUCTION DETAILS – ANGLE FLOAT

DRAWN: W.B.
APPROVED: E.M.
DATE: NOV. 2017
DATE: NOV. 2017

LOCATION: WHITEFISH POINT MANITOBA

DRAWING NO.: C-3 of 6
LOCATOR CODE: 5563