Public Services and
Procurement Canada

Real Property Branch
Major Crown Projects

PARSONS

SOB ENGINEERING

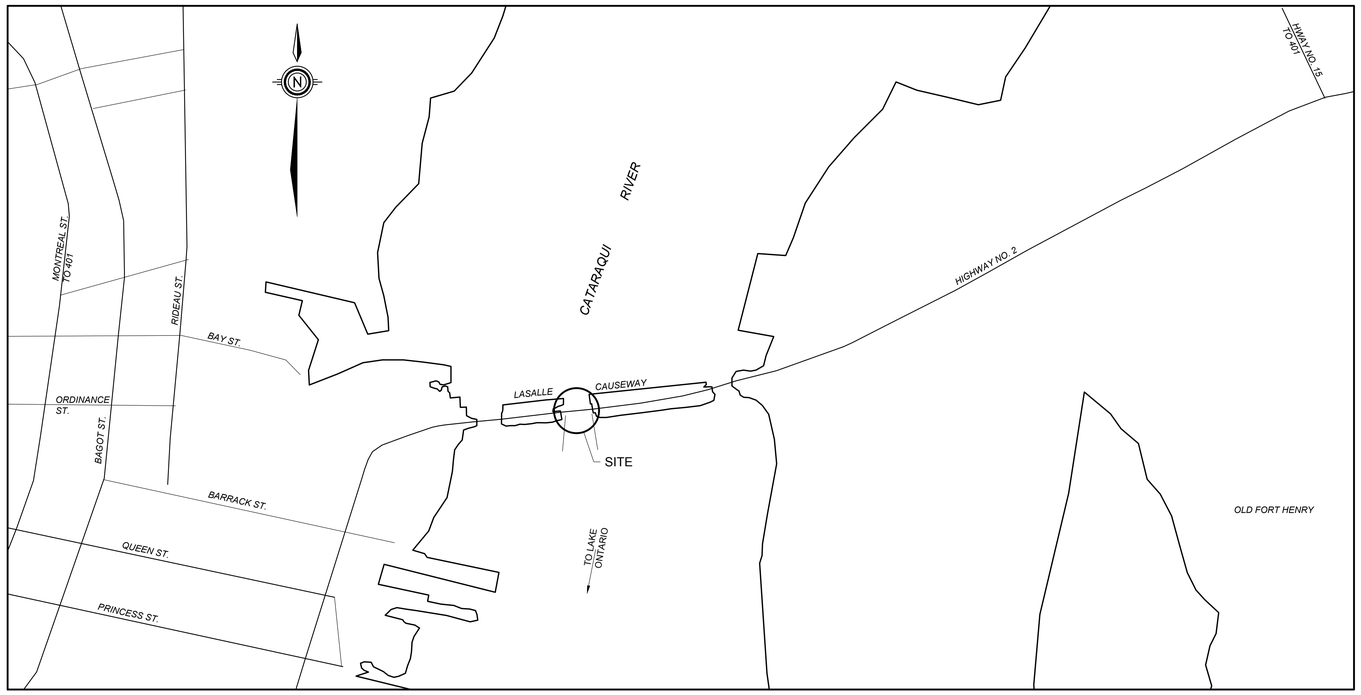

KEY PLAN

MOTOR CONTROL
LASALLE CAUSEWAY
BASCULE BRIDGE

ISSUED
FOR TENDER
15-November-2017

PROJECT R.089507.020

2017

DRAWING LIST FOR LASALLE BRIDGE: MOTOR CONTROLS	
GENERAL	
DRAWING NO.	TITLE
G-1	COVER SHEET
G-2	INDEX OF DRAWINGS AND GENERAL NOTES
G-3	GENERAL BRIDGE ELEVATION-SECTION-PLAN
G-4	SUGGESTED STAGING AREA

ELECTRICAL	
DRAWING NO.	TITLE
E-01	ELECTRICAL DRAWING INDEX AND GENERAL NOTES
E-02	SYMBOLS AND ABBREVIATIONS
E-03	BRIDGE PLAN AND ELEVATIONS
E-04	ELECTRICAL ONE-LINE DIAGRAM
E-05	DEMOLITION PLAN
E-06	OPERATORS HOUSE - ELECTRICAL LAYOUT
E-07	CONTROL CONSOLE MODIFICATION
E-08	MCC AND DRIVE ELEVATION
E-09	PANEL-1 AND UPS SCHEDULE
E-10	CONTROL LOGIC MODIFICATION
E-11	DRIVE CONTROL DIAGRAM
E-12	MACHINERY ROOM - ELECTRICAL MODIFICATION
E-13	VFD CABLE AND CONDUIT ROUTING DETAILS

MECHANICAL	
DRAWING NO.	TITLE
M-1	IDENTIFICATION OF WORK
M-2	PINION SHAFT ASSEMBLY WORK
M-3	GUIDE ROLLER ASSEMBLY WORK

GENERAL NOTES:

1. DO NOT SCALE DRAWINGS
2. THE LATEST VERISON OF ALL REFERENCE DOCUMENTS SHALL APPLY.
3. ALL WORK TO BE CARRIED OUT IN ACCORDANCE WITH THE CANADIAN HIGHWAY BRIDGE DESIGN CODE CSA S6-06 (2014 EDITION).
4. FEATURES OF CONSTRUCTION NOT FULLY SHOWN SHALL BE OF THE SAME CHARACTER AS SHOWN FOR SIMILAR CONDITIONS.
5. DIMENSIONS RELATING TO EXISTING CONSTRUCTION MUST BE FIELD VERIFIED BY CONTRACTOR BEFORE STARING ANY WORK OR FABRICATION.
6. THE CONTRACTOR SHALL EXAMINE THE SITE AND SATISFY HIMSELF OF THE ACTUAL CONDITIONS AND REQUIREMENTS OF THE WORK.
7. DISASSEMBLY OF COMPONENTS IS TO BE DONE IN A NONDESTRUCTIVE MANNER.

GENERAL CONSTRUCTION AND PROCEDURES:

1. THE CONTRACTOR SHALL PLAN AND CONTROL THE PROCESS/PROCEDURES TO THE EXTENT NECESSARY TO ENSURE THAT TOLERANCES IN THE CONTRACT DOCUMENTS ARE COMPLIED WITH. THE DEPARTMENTAL REPRESENTATIVE SHALL BE ENTITLED TO DEMAND THAT ANY SPECIFIC WORKING /INSPECTION PROCEDURE BE ADJUSTED IF SUCH PROCEDURE APPEARS NOT TO PROVIDE ADEQUATE SECURITY AGAINST EXCEEDING OF TOLERANCES.
2. ACTUAL FIELD CONDITIONS MAY REQUIRE MODIFICATION TO CONSTRUCTION DETAILS AND WORK QUANTITIES. THE CONTRACTOR SHALL PERFORM THE WORK IN ACCORDANCE WITH FIELD CONDITIONS FOLLOWING WRITTEN APPROVAL FROM DEPARTMENTAL REPRESENTATIVE.
3. IF THE CONTRACTOR DAMAGES ANY MATERIALS WHICH ARE TO REMAIN IN PLACE, OR WHICH ARE TO REMAIN THE PROPERTY OF THE OWNER, THE DAMAGED MATERIALS SHALL BE REPAIRED OR REPLACED IN A MANNER SATISFACTORY TO THE DEPARTMENTAL REPRESENTATIVE AT THE EXPENSE OF THE CONTRACTOR.
4. THE CONTRACTOR SHALL TAKE PRECAUTIONS SO AS NOT TO LEAVE DEBRIS, MATERIALS, TOOLS, ETC. ON THE BRIDGE SURFACE WHEN LEAVING THE WORK AREA ON A DAILY BASIS.
5. HORIZONTAL, VERTICAL AND DETAIL DIMENSIONS AND ELEVATIONS SHOWN ON THESE PLANS HAVE BEEN OBTAINED FROM THE ORIGINAL DESIGN DRAWINGS, SHOP DRAWINGS, AND SUBSEQUENT MODIFICATION DRAWINGS OF THE EXISTING STRUCTURES. THE CONTRACTOR SHALL PERFORM FIELD MEASUREMENTS TO ESTABLISH CONTROL POINTS AND TO VERIFY ALL EXISTING DIMENSIONS AFFECTING FABRICATION AND CONSTRUCTION. SHOP AND CONSTRUCTION DRAWINGS SHALL SHOW DESIGN DIMENSIONS AND FIELD DIMENSIONS WHENEVER THEY DIFFER.
6. RECORD DRAWINGS OF THE EXISTING STRUCTURE ARE ON FILE AT THE OFFICES OF PWGSC. RECORD DRAWINGS OF THE EXISTING STRUCTURE WILL BE MADE AVAILABLE TO THE SUCCESSFUL BIDDER FOR REFERENCE, BUT MAY NOT BE REMOVED,
7. EXCEPT AS SHOWN ON THE PLANS, NO WELDING OF ANY NATURE SHALL BE PERFORMED WITHOUT THE WRITTEN CONSENT OF THE DEPARTMENTAL REPRESENTATIVE AND THEN ONLY IN THE MANNER AND LOCATION(S) DESIGNATED IN THE AUTHORIZATION.
8. THE CONTRACTOR SHALL SUBMIT TO THE DEPARTMENTAL REPRESENTATIVE A DETAILED WRITTEN PLAN OF OPERATIONS COINCIDENT WITH THE PROJECT SCHEDULE AND EACH SUBSEQUENT SCHEDULE UPDATE AS DEFINED WITHIN THE CONTRACT SPECIFICATIONS.
9. THE CONTRACTOR SHALL PERFORM ALL WORK IN ACCORDANCE WITH THE PERMITTED LANE CLOSURES AS DEFINED IN THE CONTRACT SPECIFICATIONS. WORK THAT DOES NOT AFFECT THE TRAFFIC MAY BE PERFORMED OUTSIDE THE TIMES OF THE RESTRICTIVE LANE CLOSURES BUT MUST REMAIN IN CONFORMANCE WITH THE ACCEPTED WRITTEN PLAN OF OPERATIONS. AND DEPARTMENTAL REPRESENTATIVE'S APPROVALS.
10. DURING REMOVAL AND CONSTRUCTION OPERATIONS, THE CONTRACTOR SHALL NOT BE PERMITTED TO DROP MATERIAL OR DEBRIS FROM THE BRIDGE NOR SHALL ANY WATER WHICH IS USED FOR WASHING PURPOSES OR OTHER SIMILAR OPERATIONS WHICH CAUSES IT TO BECOME POLLUTED WITH SAND, SILT, CEMENT, OIL OR OTHER IMPURITIES BE DEPOSITED INTO THE CATARAQUI RIVER
11. PROTECTIVE SHIELDS SHALL BE USED TO CATCH POTENTIAL FALLING MATERIAL AND SHIELD THE AREA BELOW THE WORK. THE LOAD CARRYING CAPACITY OF THE PROTECTIVE SHIELDS SHALL BE CONSISTENT WITH THE NATURE OF THE WORK BEING PERFORMED IN ANY PARTICULAR LOCATION. IF THE ENGINEER DETERMINES THAT ADEQUATE PROTECTIVE SHIELDS ARE NOT BEING PROVIDED, THE WORK SHALL BE SUSPENDED UNTIL ADEQUATE WORK SHIELD ARE EMPLOYED.
12. THE CONTRACTOR SHALL SUBMIT TO THE DEPARTMENTAL REPRESENTATIVE FINAL DESIGN DRAWINGS AND DESIGN CALCULATIONS OF ALL TEMPORARY ACCESS AND CONSTRUCTION PLATFORMS AND PROTECTIVE SHIELDS. THESE DRAWINGS SHALL BE FULLY DIMENSIONED AND SHALL SHOW ALL ATTACHMENTS TO THE EXISTING BRIDGE MEMBERS. DRAWINGS AND CALCULATIONS SHALL EACH BEAR THE SIGNATURE AND SEAL OF THE DESIGNER WHO SHALL BE A LICENSED PROFESSIONAL ENGINEER IN ONTARIO. ATTACHMENTS TO THE EXISTING STRUCTURE, THAT IN THE OPINION OF DEPARTMENTAL REPRESENTATIVE, COULD BE DAMAGING TO ANY COMPONENT OF THE BRIDGE STRUCTURE SHALL NOT BE USED.
13. THE CONTRACTOR SHALL OBTAIN HIS OWN ELECTRICAL POWER SOURCE FOR ALL CONSTRUCTION OPERATIONS AND SHALL NOT BE PERMITTED TO USE ANY EXISTING UTILITIES ON THE BRIDGE AS A SOURCE OF POWER.
14. EXCEPT WHILE INCLUDED WITHIN A PARTICULAR PHASE OF CONSTRUCTION, THE BRIDGE MAINTENANCE WALKS, THE ROADWAY, AND ANY BRIDGE EASEMENT SHALL NOT BE USED FOR STORAGE OF MATERIALS OR EQUIPMENT AND SHALL NOT BE COVERED OR BLOCKED IN ANY WAY WITHOUT WRITTEN AUTHORIZATION BY DEPARTMENTAL REPRESENTATIVE.
15. THE CONTRACTOR SHALL SUBMIT TO DEPARTMENTAL REPRESENTATIVE FOR APPROVAL, HIS PLAN AND SCHEDULE FOR ERECTING ALL NEW STRUCTURAL STEEL ON THE BRIDGE SUPERSTRUCTURE. THIS PLAN MUST BE SUBMITTED AT LEAST 7 DAYS PRIOR TO THE COMMENCEMENT OF ANY REMOVAL WORK.
16. CONTRACTOR TO SUBMIT A DETAILED PLAN OF HIS PROPOSED REMOVAL AND INSTALLATION OF ALL COMPONENTS TO THE DEPARTMENTAL REPRESENTATIVE FOR APPROVAL. THIS PLAN MUST BE SUBMITTED AT LEAST 7 DAYS PRIOR TO COMMENCEMENT OF ANY WORK.
17. CONTRACTOR TO SUBMIT SITE-SPECIFIC HEALTH AND SAFETY PLAN PER SPECIFICATION REQUIREMENTS.

Canada

Public Services and Procurement Canada

Real Properties Branch

PARSONS

Verify all dimensions and conditions on site and immediately notify the Departmental Representative of all discrepancies.

SOB ENGINEERING

LICENSED PROFESSIONAL ENGINEER
M. MANSFIELD
100193767
15-Nov-17
PROVINCE OF ONTARIO

revisions	description	date
A	ISSUED FOR TENDER	15-NOV-2017

A detail no.
B location drawing no.
C drawing no.

project

MOTOR CONTROLS
LASALLE CAUSEWAY
BASCULE BRIDGE

KINGSTON, ONTARIO

drawing

INDEX OF DRAWINGS
AND
GENERAL NOTES

Designed By M. MANSFIELD
Date

Drawn By M. BRUNO
Date

Reviewed By M. MANSFIELD
Date

Approved By M. MANSFIELD
Date

Tender
R GRATL
Project Manager

Project no.
R.089507.020

Drawing no.
G-2

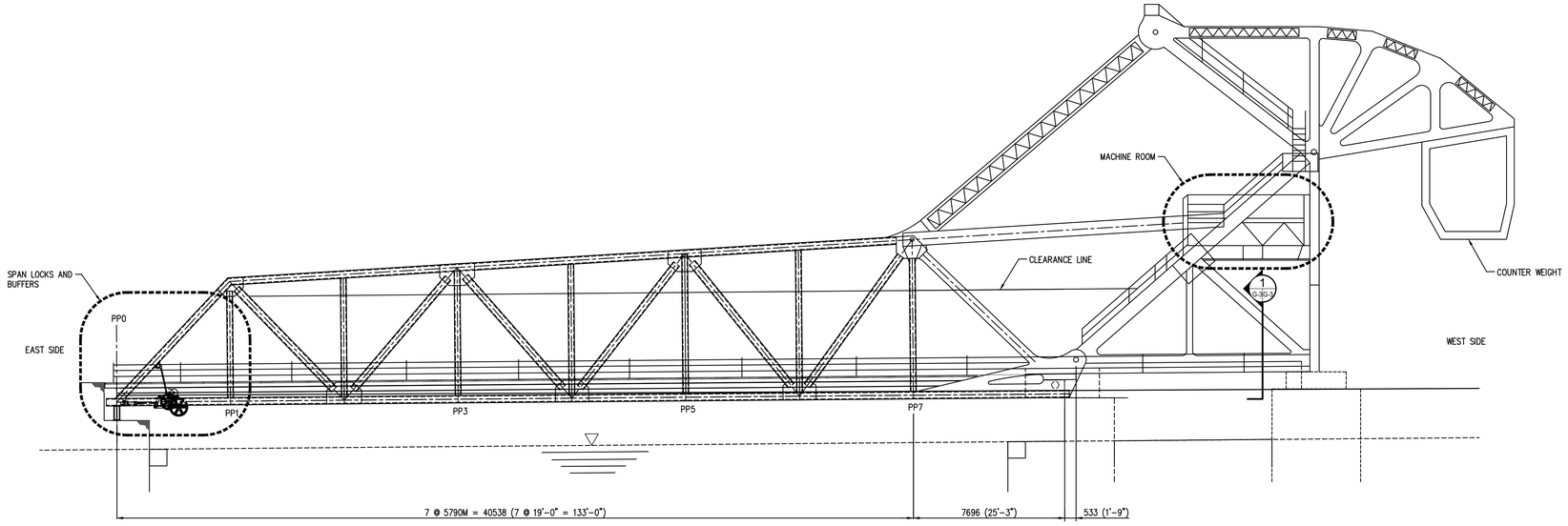

ELEVATION

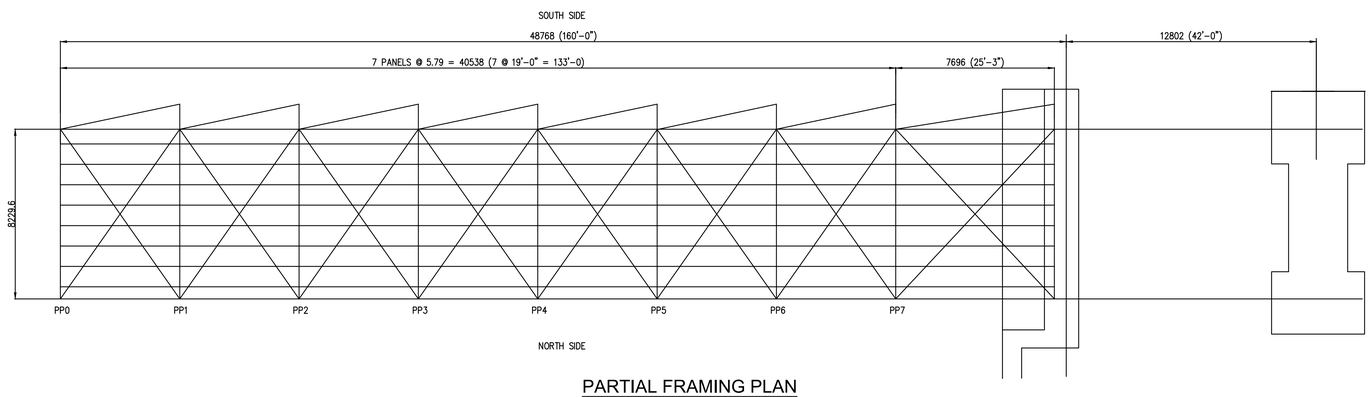

PARTIAL FRAMING PLAN

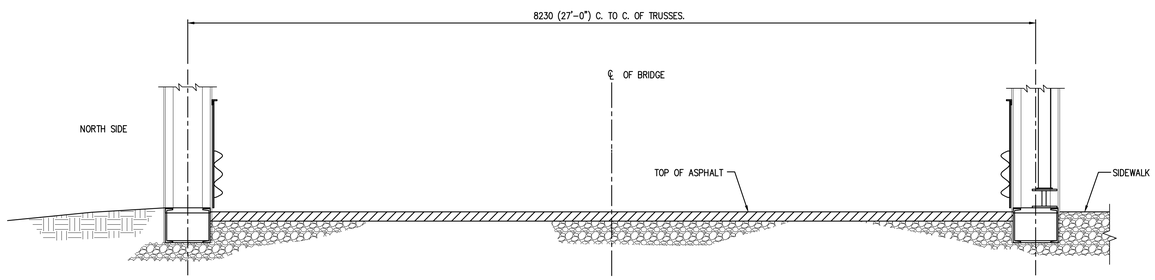

SECTION BELOW MACHINE ROOM

SECTION 1 G-3 G-3

Canada

Public Services and Procurement Canada

Real Properties Branch

PARSONS

Verify all dimensions and conditions on site and immediately notify the Departmental Representative of all discrepancies.

SOB ENGINEERING

LICENSED PROFESSIONAL ENGINEER
M. MANSFIELD
100193767
15-Nov-17
PROVINCE OF ONTARIO

revisions	description	date
A	ISSUED FOR TENDER	15-NOV-2017

A detail no.
B location drawing no.
C drawing no.

project

MOTOR CONTROLS
LASALLE CAUSEWAY
BASCULE BRIDGE

KINGSTON, ONTARIO

drawing

GENERAL BRIDGE
ELEVATION, SECTION
AND PLAN

Designed By M. MANSFIELD
Date

Drawn By M. BRUNO
Date

Reviewed By M. MANSFIELD
Date

Approved By M. MANSFIELD
Date

Tender

R GRATL
Project Manager

Project no.
R.089507.020

Drawing no.
G-3

Page Setup: ----

LEGEND:

CONSTRUCTION STAGING AREA.

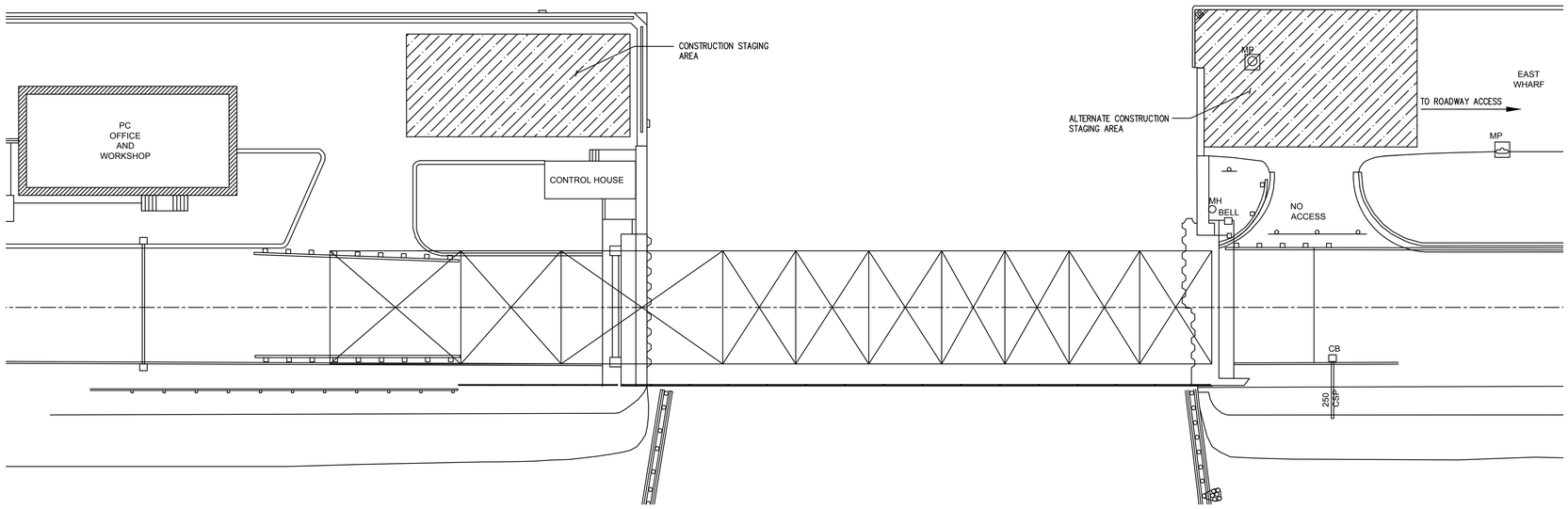

PLAN
1:200

Canada

Public Services and Procurement Canada

Real Properties Branch

PARSONS

Verify all dimensions and conditions on site and immediately notify the Departmental Representative of all discrepancies.

SOB ENGINEERING

LICENSED PROFESSIONAL ENGINEER
M. MANSFIELD
100193767
15-Nov-17
PROVINCE OF ONTARIO

revisions	description	date
A	ISSUED FOR TENDER	15-NOV-2017

A detail no.
B location drawing no.
C drawing no.

project

MOTOR CONTROLS
LASALLE CAUSEWAY
BASCULE BRIDGE

KINGSTON, ONTARIO

drawing

SUGGESTED
STAGING AREA

Designed By M. MANSFIELD
Date

Drawn By M. BRUNO
Date

Reviewed By M. MANSFIELD
Date

Approved By M. MANSFIELD
Date

Tender
R GRATL
Project Manager

Project no.
R.089507.020

Drawing no.
G-4

Consultant's Information: H:\ISD\476073\3020 Motor Controls Phase 2 Detailed Design\Issue For Tender (13-Nov-2017)\476073_La Salle Causeway_G-4.dwg Last Saved: P0076030 Plot Date: Wednesday, November 15, 2017 1:46:52 PM

PWGSC B1 (1000 x 707)

Page Setup: ----

INDEX OF DRAWING	
NUMBER	DRAWING TITLE
E–01	ELECTRICAL DRAWING INDEX AND GENERAL NOTES
E–02	SYMBOLS AND ABBREVIATIONS
E–03	BRIDGE PLAN AND ELEVATION
E–04	ELECTRICAL ONE–LINE DIAGRAM
E–05	DEMOLITION PLAN
E–06	OPERATORS HOUSE ELECTRICAL LAYOUT
E–07	CONTROL CONSOLE MODIFICATION
E–08	MCC AND DRIVE ELEVATION
E–09	PANEL–1 AND UPS SCHEDULE
E–10	CONTROL LOGIC MODIFICATION
E–11	DRIVE CONTROL DIAGRAM
E–12	MACHINERY ROOM ELECTRICAL MODIFICATIONS
E–13	VFD CABLE AND CONDUIT ROUTING DETAILS

STAGED CONSTRUCTION NOTES:

THE PROJECT SHALL BE IMPLEMENTED IN STAGES AS FOLLOWS:

STAGE 1:
- INSTALL POWER AND CONTROL MODIFICATIONS AND ADDITIONS AS DESCRIBED IN THE CONTRACT DOCUMENTS EXCLUDING THE DISCONNECTION AND REMOVAL OF THE EXISTING MOTOR NO.2 DRIVE CONTROLLER IN EXISTING MCC.
- TEST BRIDGE OPERATING SYSTEM USING EXISTING MOTOR NO.2 DRIVE CONTROLLER IN EXISTING MCC. THIS TEST IS TO PROVE THE BRIDGE CAN STILL BE OPERATED WITH EXISTING DRIVE AND DRIVE MOTOR NO.2 PRIOR TO REMOVING EXISTING DRIVE MOTOR NO.1.
- REMOVE EXISTING MOTOR NO.1 AND REPLACE WITH NEW MOTOR NO.1.
- INSTALL NEW MOTOR NO.1, TUNE AND TEST WITH NEW VFD DRIVE NO.1.

STAGE 2:
- REMOVE EXISTING MOTOR NO2 AND REPLACE WITH NEW MOTOR NO.2.
- INSTALL NEW MOTOR NO.2, TUNE AND TEST WITH NEW VFD DRIVE NO2.

STAGE 3:
- TUNE AND TEST DRIVE NO.1 AND DRIVE NO.2 OPERATING AS A PAIR OF DRIVES WITH LOAD SHARING.

GENERAL NOTES:

1. ALL DIMENSIONS ARE IN MILLIMETRES UNLESS OTHERWISE NOTED.
2. ALL DIMENSIONS SHOWN ON THESE CONTRACT DRAWINGS SHALL BE VERIFIED IN THE FIELD BY THE CONTRACTOR AND ANY DISCREPANCIES REPORTED TO THE DEPARTMENT REPRESENTATIVE PRIOR TO PROCEEDING WITH PROCUREMENT OF MATERIALS OR INSTALLATION IMPACTED BY THE PERCEIVED DISCREPANCY.
3. UNLESS OTHERWISE NOTED, THE MINIMUM WIRE SIZE IN CONDUITS AND MULTICONDUCTOR CABLES SHALL BE NO. 12 AWG.
4. SEPARATE WIRE DESIGNATIONS SHALL BE ASSIGNED FOR EACH BRANCH CIRCUIT NEUTRAL WIRE.
5. EACH WIRE IS TO BE NUMBERED FOR IDENTIFICATION, AND THE SAME NUMBER SHALL BE USED THROUGHOUT.
6. ALL WORK SHALL BE PERFORMED IN CONFORMANCE TO CHBC, UL, CSA AND NEMA CODES, STANDARDS, AND PRACTICES.
7. ALL CONDUITS SHALL BE PVC COATED RIGID GALVANIZED STEEL UNLESS OTHERWISE NOTED.
8. CONTRACTOR SHALL SUBMIT COMPLETE CONDUIT ROUTING LAYOUTS AND SUPPORT DETAIL DIAGRAMS FOR REVIEW AND APPROVAL BY THE DEPARTMENT REPRESENTATIVE PRIOR TO INSTALLATION.
9. ALL FASTENERS AND SUPPORTS FOR ELECTRICAL EQUIPMENT SHALL BE 300 SERIES STAINLESS STEEL. ALL ELECTRICAL BOXES SHALL BE NEMA 4X STAINLESS STEEL UNLESS OTHERWISE NOTED.
10. THE DRAWINGS SHALL BE READ IN CONJUNCTION WITH ALL RELEVANT ELECTRICAL SPECIFICATIONS.
11. DISCONNECT SWITCHES SHALL BE FURNISHED AND INSTALLED IN ACCORDANCE WITH SPECIFICATION 26 28 23.
12. ALL CONDUITS SHALL BE FURNISHED AND INSTALLED IN ACCORDANCE WITH SPECIFICATION 26 05 00.
13. ALL JUNCTION AND PULL BOXES SHALL BE FURNISHED AND INSTALLED IN ACCORDANCE WITH SPECIFICATION 26 05 00.

Canada

Public Works and Government Services Canada

REAL PROPERTIES BRANCH

PARSONS

Verify all dimensions and conditions on site and immediately notify the Departmental Representative of all discrepancies.

SOB ENGINEERING

LICENSED PROFESSIONAL ENGINEER G. T. REES 100120282 11/15/17 PROVINCE OF ONTARIO

revisions	description	date
A	ISSUED FOR TENDER	15-NOV-17

A detail no.
B location drawing no.
C drawing no.

project

MOTOR CONTROLS
LASALLE CAUSEWAY
BASCULE BRIDGE

KINGSTON, ONTARIO

drawing

ELECTRICAL DRAWING INDEX AND GENERAL NOTES

Designed By L. Xu
Date
Drawn By L. Xu
Date
Reviewed By G. REES
Date
Approved By M. MANSFIELD
Date
Tender
R GRATL
Project Manager
Project no.
R.089507.020
Drawing no.
E-01

Consultant's information: M:\SB\SB790-SB790 - Parsons Lasalle On Call\SB790A Motor And Drive Replacement\Electrical\ACAD\E01-Electrical Drawing Index And General Notes.dwg Plot Date: Wednesday, November 15, 2017 3:12:58 PM

PWGSC B1 (1000 x 707)

GENERAL ELECTRICAL SYMBOLS

- #AT / #AF — CIRCUIT BREAKER (CB). 'AT' DENOTES TRIP RATING 'AF' DENOTES FRAME RATING
- 3 / 9–30 — MOTOR CIRCUIT PROTECTOR (MCP) 3–CONTINUOUS CURRENT RATING (AMPS) 9–30 TRIP SETTING RANGE (AMPS)
- 2P, 30A — DISCONNECT SWITCH. RATINGS AND NO. OF POLES AS SHOWN.
- OL — OVERLOAD RELAY
- # — MOTOR # DENOTES HORSEPOWER RATNG
- G — GENERATOR
- F — FUSED DISCONNECT SWITCH
- DISCONNECT SWITCH (NON–FUSED)
- ATS — AUTOMATIC TRANSFER SWITCH RATING AS INDICATED
- #A — FUSE, RATING AS INDICATED #
- GROUND
- X# — CONTROL/RELAY OR CONTACTOR COIL, X INDICATES TYPE:
  CR – CONTROL RELAY
  DP – DEFINITE PURPOSE RELAY
  LC – LIGHTING CONTACTOR
  M – MOTOR STARTER
  PC – PHOTOCELL
  TC – TIME CLOCK
  TR – TIMING RELAY
  # – NUMBER
- NORMALLY OPEN CONTACT (N.O.)
- NORMALLY CLOSED CONTACT (N.C.)
- TRANSFORMER
- NORMALLY OPEN LIMIT SWITCH, CONTACT CLOSES ON REACHING LIMIT
- NORMALLY OPEN LIMIT SWITCH, HELD CLOSED
- NORMALLY CLOSED LIMIT SWITCH, CONTACT OPENS ON REACHING LIMIT
- NORMALLY CLOSED LIMIT SWITCH, HELD OPEN
- SELECTOR SWITCH, 3 POSITION MAINTAINED
- NORMALLY OPEN PUSHBUTTON, MOMENTARY CONTACT UNLESS OTHERWISE NOTED
- NORMALLY CLOSED PUSHBUTTON, MOMENTARY CONTACT UNLESS OTHERWISE NOTED
- JB — BOX, CABINET
  JB = JUNCTION BOX
  PB = PULL BOX
  TC = TERMINATION CABINET
- G — INDICATOR LIGHT
  G – GREEN
  Y – YELLOW
  R – RED
- WP — DUPLEX RECEPTACLE, NEMA 5–20R 'WP' INDICATES WEATHERPROOF
- REACTOR
- ENC — ENCODER
- RESISTOR
- R — RESOLVER
- T — ELECTRONIC TRIP UNIT
- TWO WIRES CROSSING AND CONNECTED
- TWO WIRES CROSSING AND NOT CONNECTED

GENERAL ELECTRICAL (CONT'D)

- DISCONNECT SWITCH
- KEYED SWITCH
- EMERGENCY STOP
- NORMALLY CLOSED TIME DELAY CONTACT
- NORMALLY OPEN TIME DELAY CONTACT
- SELECTOR SWITCH, TWO POSITION MAINTAINED

WIRING

- X — HOME RUN. ARROW DENOTES NUMBER OF CIRCUITS 'X' DENOTES SOURCE PANEL AND CKT NO.
- UNDERGROUND OR IN SLAB CONDUITS OR OTHERWISE NOTED, SIZED AS NOTED

ABBREVIATIONS

A, AMP	AMPERE
AF	AMP FRAME
AT	AMP TRIP
AM	AMMETER
ATS	AUTOMATIC TRANSFER SWITCH
AUX	AUXILIARY
AWG	AMERICAN WIRE GAUGE
BP	BYPASS
C	CONDUIT
CB	CIRCUIT BREAKER
CCTV	CLOSED CIRCUIT TELEVISION
CH	CONTROL HOUSE
CHBC	CANADIAN HIGHWAY BRIDGE CODE
CKT	CIRCUIT
CP	CONTROL PANEL
CR	CONTROL RELAY
CT	CURRENT TRANSFORMER
DISC	DISCONNECT
DWG	DRAWING
EM	EMERGENCY
ENC	ENCODER
EOT	END OF TRAVEL
ESTOP	EMERGENCY STOP
F.C.	FULLY CLOSED
FO	FIBER OPTIC
F.O.	FULLY OPEN
FPR	FEEDER PROTECTION RELAY
FRE	FIBERGLASS REINFORCED EPOXY
FU	FUSE
FVR	FULL VOLTAGE REVERSING
FVNR	FULL VOLTAGE NON REVERSING
G	GREEN
GND	GROUND
GEN	GENERATOR
HP	HORSE POWER
HPU	HYDRAULIC POWER UNIT
HMI	HUMAN MACHINE INTERFACE
IL	INDICATOR LIGHTS
I/O	INPUT / OUTPUT
JB	JUNCTION BOX
KAIC	INTERRUPT CURRENT
KW	KILOWATT
KVA	KILOVOLT–AMPERES
LA	LIGHTING ARRESTOR
LGT	LIGHT
LP	LIGHTING PANEL
LS	LIMIT SWITCH
MC	MOTOR CONTACTOR
MCC	MOTOR CONTROL CENTRE
MCP	MOTOR CIRCUIT PROTECTOR
MLO	MAIN LUG ONLY
N	NORTH
NAV.	NAVIGATION
N.C.	NORMALLY CLOSED / NEARLY CLOSED
NE	NORTHEAST
NEUT	NEUTRAL
N.O.	NORMALLY OPEN / NEARLY OPEN
NOC	NORTH ON–COMING
NOG	NORTH OFF–GOING
NTS	NOT TO SCALE
NW	NORTHWEST
OC	OVERCURRENT
OL	OVERLOAD
OT	OVER TRAVEL
P	POLE
PA	PUBLIC ADDRESS
PB	PUSH BUTTON / PULL BOX
PLC	PROGRAMMABLE LOGIC CONTROLLER
PM	POWER MONITOR
PP	POWER PANEL
R	RED
RECPT	RECEPTACLE
RES	RESISTOR
RGS	RIGID GALVANIZED STEEL
S	SOUTH
SE	SOUTHEAST
SL	SPAN LOCK
SOC	SOUTH ON–COMING
SOG	SOUTH OFF–GOING
SP	SPAN
SW	SWITCH/SOUTHWEST
SWGR	SWITCHGEAR
TD	TIME DELAY
TG	TRAFFIC GATE
THERMO	THERMOSTAT
TL	TRAFFIC LIGHT
TS	THERMOSTAT SWITCH
TYP	TYPICAL
UPS	UNINTERRUPTIBLE POWER SUPPLY
V	VOLTAGE
VM	VOLTMETER
W	WHITE
WG	WARNING GATE
WM	WATTMETER
WP	WEATHERPROOF
XMFR	TRANSFORMER
Y	YELLOW

Canada

Public Works and Government Services Canada
REAL PROPERTIES BRANCH

PARSONS

Verify all dimensions and conditions on site and immediately notify the Departmental Representative of all discrepancies.

SOB ENGINEERING

LICENSED PROFESSIONAL ENGINEER G. T. REES 100120262 11/15/17 PROVINCE OF ONTARIO

revisions	description	date
A	ISSUED FOR TENDER	15-NOV-17

A detail no.
B location drawing no.
C drawing no.

project
MOTOR CONTROLS
LASALLE CAUSEWAY
BASCULE BRIDGE
KINGSTON, ONTARIO

drawing
SYMBOLS AND ABBREVIATIONS

Designed By L. Xu
Date
Drawn By L. Xu
Date
Reviewed By G. REES
Date
Approved By M. MANSFIELD
Date
Tender
R.GRATL
Project Manager
Project no.
R.089507.020
Drawing no.
E-02

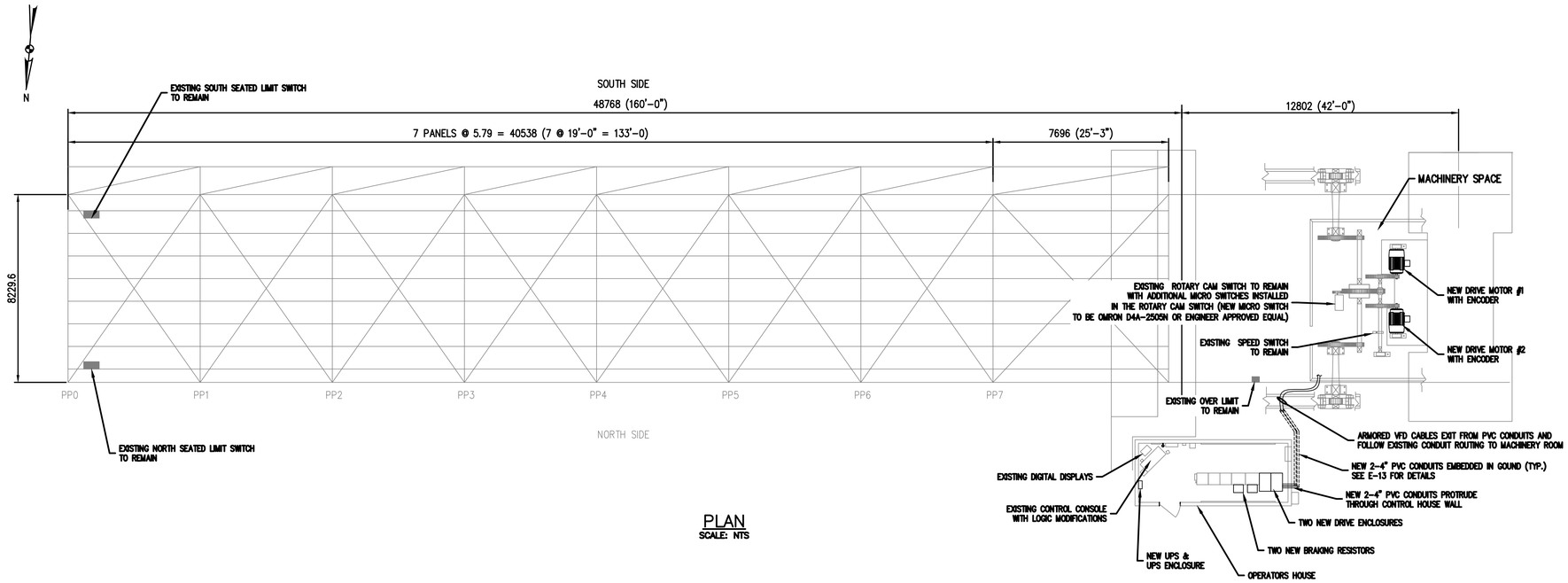

PLAN
SCALE: NTS

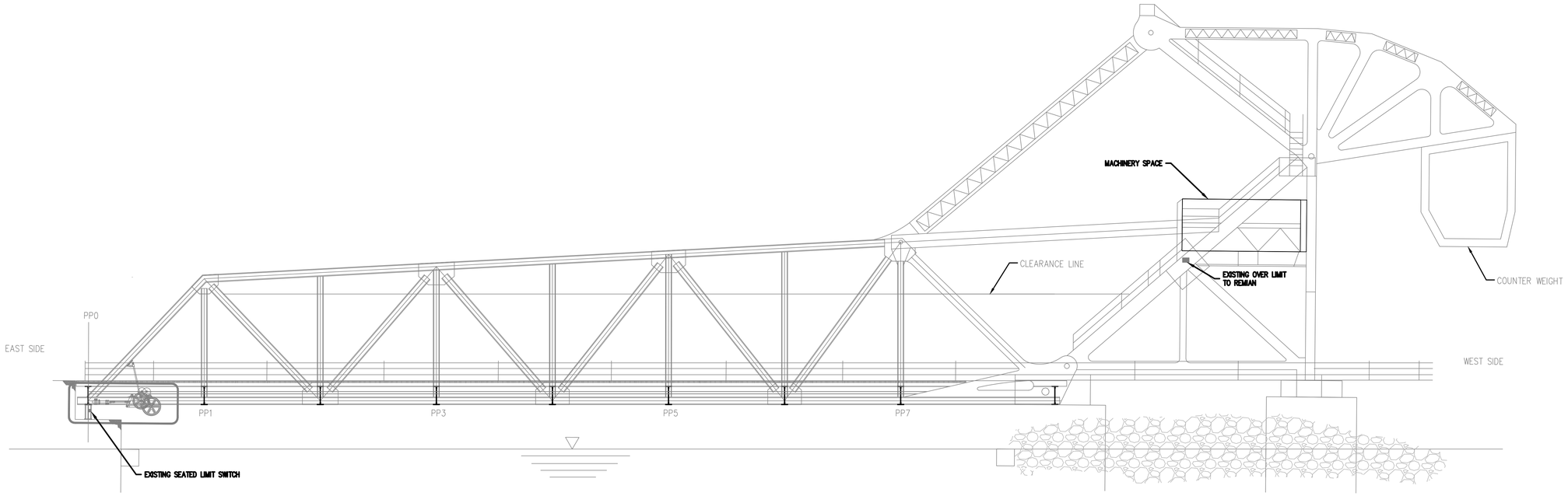

ELEVATION
SCALE: NTS

Canada

Public Works and Government Services Canada

REAL PROPERTIES BRANCH

PARSONS

Verify all dimensions and conditions on site and immediately notify the Departmental Representative of all discrepancies.

SOB ENGINEERING

LICENSED PROFESSIONAL ENGINEER G. T. REES 100120262 NOV 15/17 PROVINCE OF ONTARIO

revisions	description	date
A	ISSUED FOR TENDER	15-NOV-17

A detail no.
B location drawing no.
C drawing no.

project
MOTOR CONTROLS
LASALLE CAUSEWAY
BASCULE BRIDGE

KINGSTON, ONTARIO

drawing
BRIDGE PLAN AND ELEVATION

Designed By L. Xu
Date
Drawn By L. Xu
Date
Reviewed By G. REES
Date
Approved By M. MANSFIELD
Date
Tender
R GRATL
Project Manager
Project no. R.089507.020
Drawing no. E-03

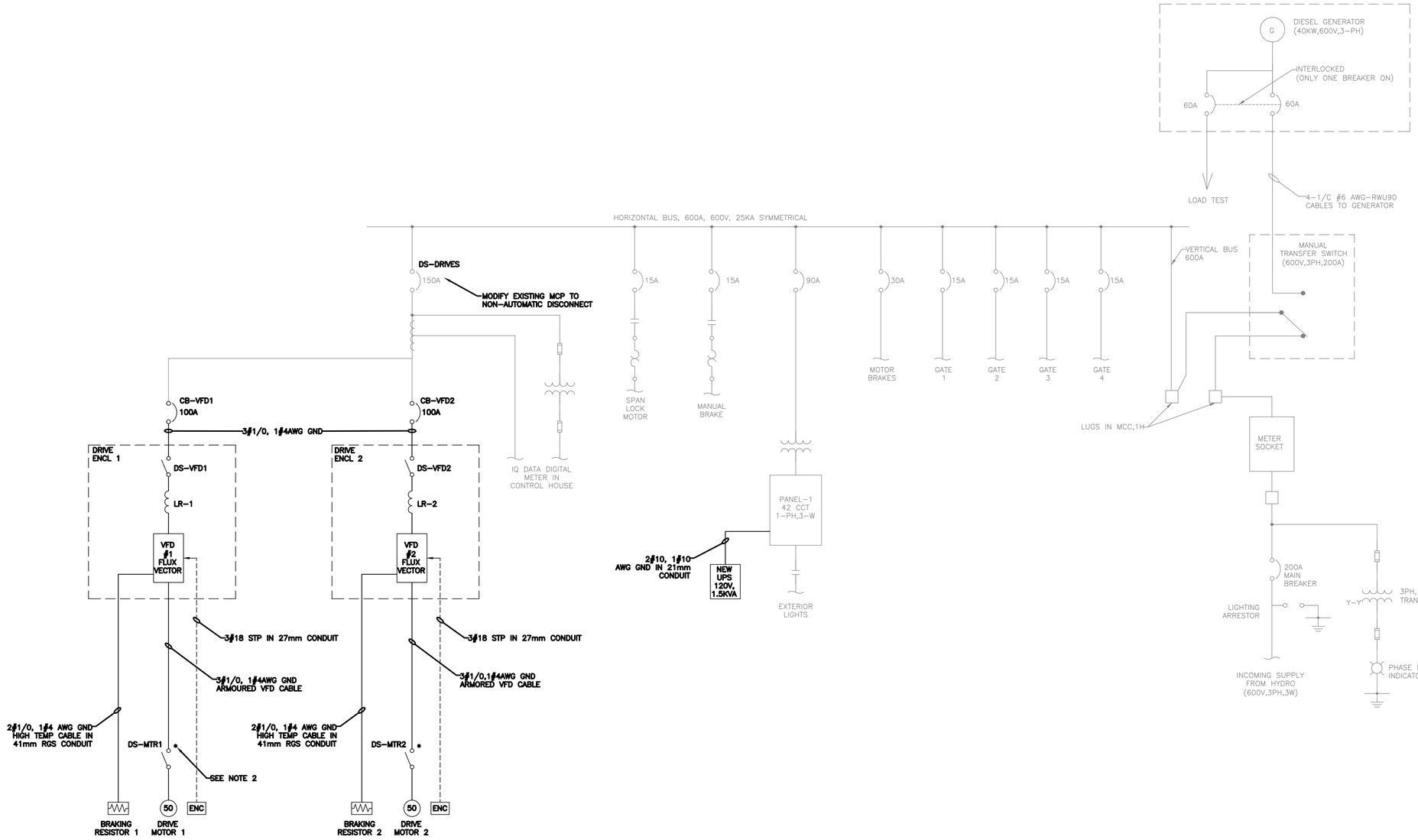

NOTES:

1. SEE DRAWING E-02 FOR SYMBOLS AND ABBREVIATIONS.
2. ALL SAFETY DISCONNECT SWITCHES INDICATED THUS '*' ARE FOR DEVICES FURNISHED WITH HEATERS AND SHALL BE PROVIDED WITH THREE (3) MAIN POLES RATED AS INDICATED AND ONE (1) AUXILIARY POLE RATED AT 15 AMPS FOR HEATER DISCONNECT
3. ALL FIELD WIRING SHALL BE RUN IN PVC COATED CONDUITS TO THE RESPECTIVE FIELD DEVICES.
4. THE NEW UPS SHALL BE FED FROM A 120V CIRCUIT ON PANEL-1.
5. VFD CABLES SHALL BE INSTALLED PER MANUFACTURER'S RECOMMENDATION.
6. CONDUIT INSTALLATION AND ROUTING TO SHALL BE FIELD DETERMINED. CONTRACTOR SHALL SUBMIT THE RACEWAY INSTALLATION SHOP DRAWINGS FOR REVIEW PRIOR TO THE CONSTRUCTION.
7. RIGID METAL CONDUITS WITHOUT PVC COATING ARE ONLY ACCEPTABLE IN THE OPERATORS HOUSE AND MACHINERY ROOM. PVC COATED RGS CONDUIT SHALL BE USED FOR EXTERIOR APPLICATIONS.

Canada

Public Works and Government Services Canada

REAL PROPERTIES BRANCH

PARSONS

Verify all dimensions and conditions on site and immediately notify the Departmental Representative of all discrepancies.

SB ENGINEERING

LICENSED PROFESSIONAL ENGINEER G. T. REES 100120262 NOV 15/17 PROVINCE OF ONTARIO

revisions	description	date
A	ISSUED FOR TENDER	15-NOV-17

A detail no.
B location drawing no.
C drawing no.

project

MOTOR CONTROLS
LASALLE CAUSEWAY
BASCULE BRIDGE

KINGSTON, ONTARIO

drawing

ELECTRICAL ONE-LINE DIAGRAM

Designed By L. Xu
Date

Drawn By L. Xu
Date

Reviewed By G. REES
Date

Approved By M. MANSFIELD
Date

Tender
R.GRATL
Project Manager

Project no. R.089507.020

Drawing no. E-04

Page Setup: ----

Plot Date: Wednesday, November 15, 2017 3:13:13 PM

Last Saved: Lin

Consultant's Information: M:\SBE\SB790-SB799 - Parsons Lasalle Cn Cut\SB790A Motor And Drive Replacement\Electrical\ACAD\E04-Electrical One Line Diagram.dwg

PWGSC B1 (1000 x 707)

Page Setup: ----

LEGENDS:

STAGE 1 REMOVAL

STAGE 2 REMOVAL

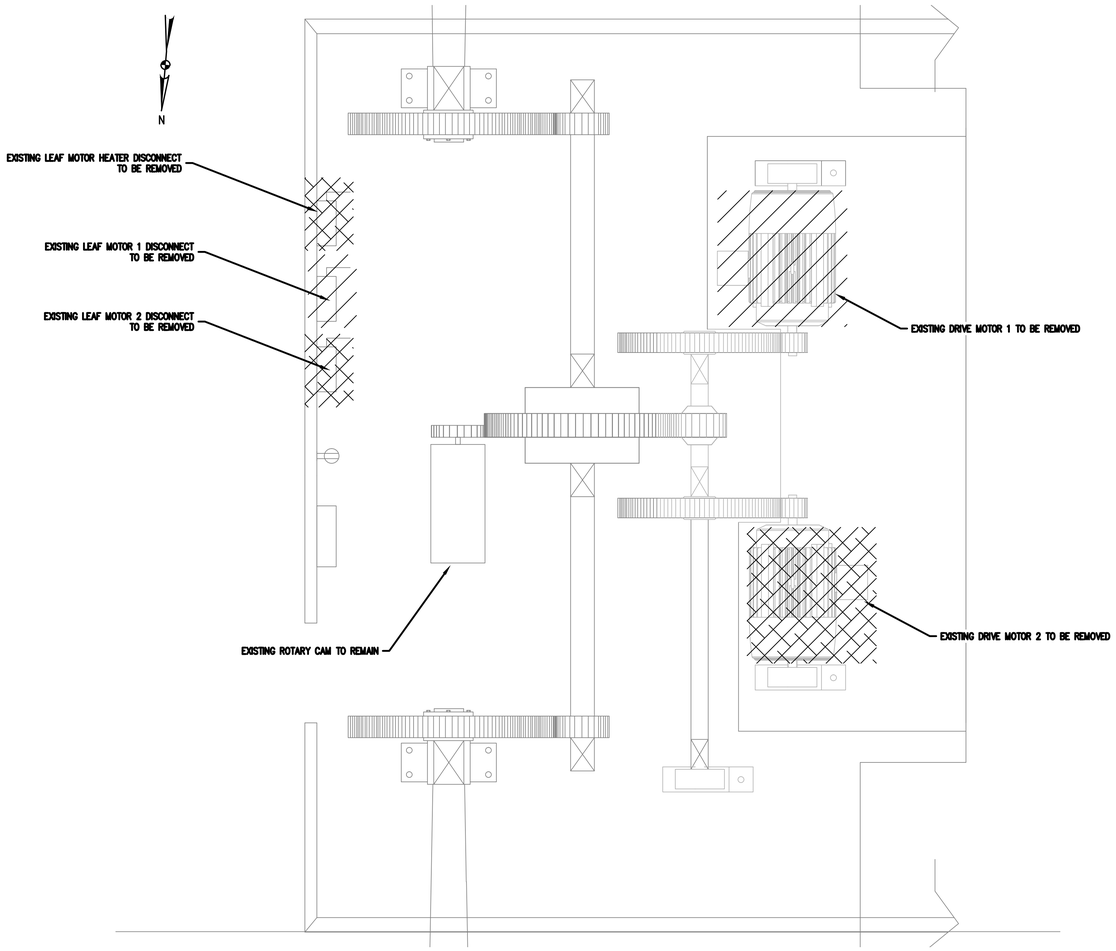

MACHINERY SPACE DEMOLITION PLAN

SCALE: NTS

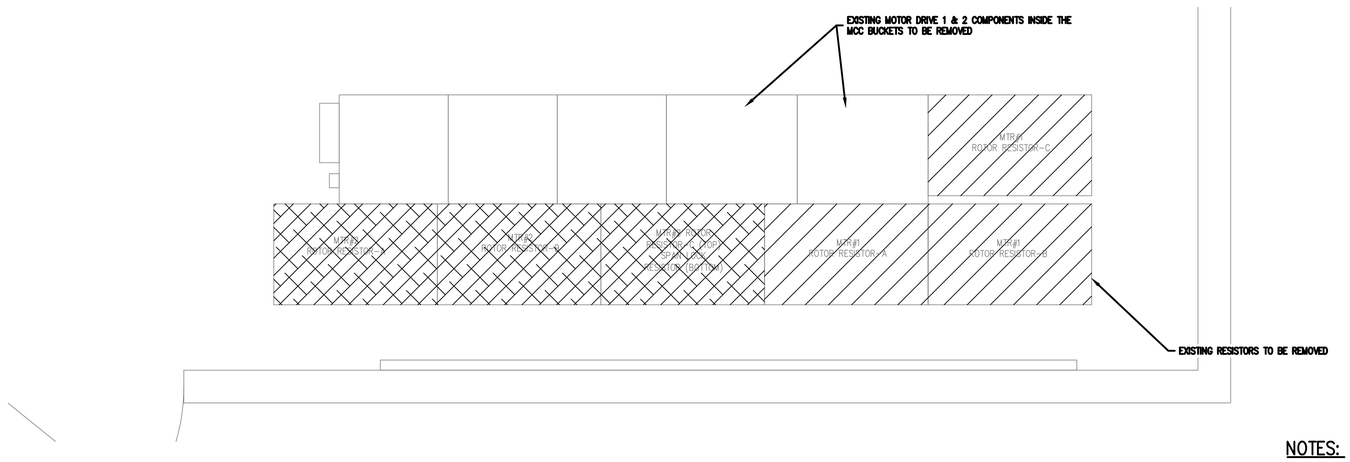

OPERATORS HOUSE DEMOLITION PLAN

SCALE: NTS

NOTES:

1. FOR STAGED DEMOLITION SEE DWG E-01 ELECTRICAL DRAWING INDEX AND GENERAL NOTES.
2. MACHINERY SPACE LAYOUT SHOWN IS FOR REFERENCE ONLY FOR ELECTRICAL WORK IDENTIFICATION. SEE MECHANICAL DRAWINGS FOR THE MACHINERY DETAILS.

Canada

Public Works and Government Services Canada

REAL PROPERTIES BRANCH

PARSONS

Verify all dimensions and conditions on site and immediately notify the Departmental Representative of all discrepancies.

SOB ENGINEERING

LICENSED PROFESSIONAL ENGINEER G. T. REES 100120262 PROVINCE OF ONTARIO

revisions	description	date
A	ISSUED FOR TENDER	15-NOV-17

A detail no.
B location drawing no.
C drawing no.

project

MOTOR CONTROLS
LASALLE CAUSEWAY
BASCULE BRIDGE

KINGSTON, ONTARIO

drawing

DEMOLITION PLAN

Designed By L. Xu
Date

Drawn By L. Xu
Date

Reviewed By G. REES
Date

Approved By M. MANSFIELD
Date

Tender
R GRATL
Project Manager

Project no. R.089507.020

Drawing no. E-05

Plot Date: Wednesday, November 15, 2017 3:13:18 PM

Last Saved: Lin

Consultant's Information: M:\SBE\SB790-\SB790 - Parsons Lasalle On Call\SB790A Motor And Drive Replacement\Electrical\ACAD\E05-Demolition Plan.dwg

PWGSC B1 (1000 x 707)

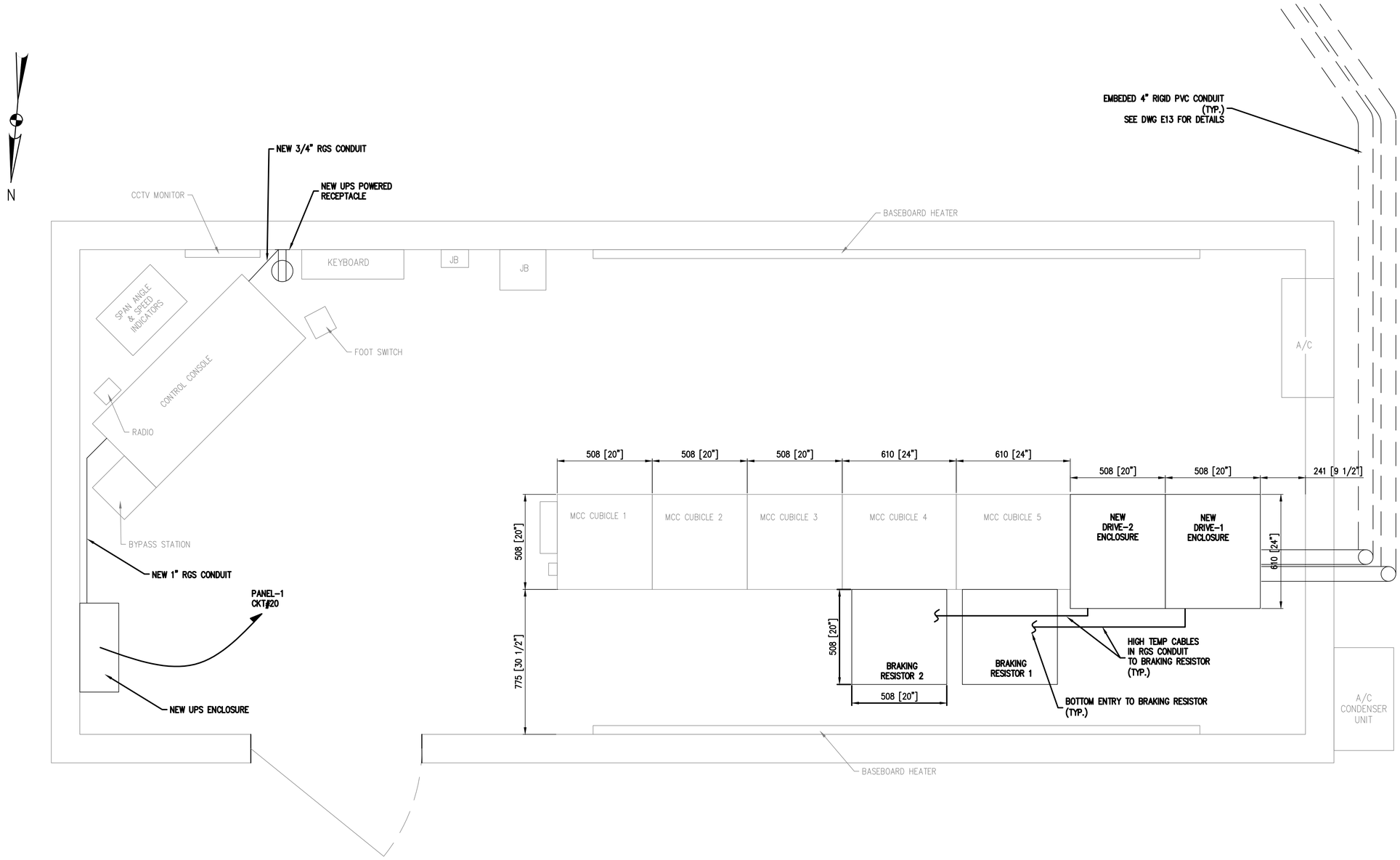

OPERATORS HOUSE ELECTRICAL LAYOUT
SCALE: NTS

NOTES:

1. DRIVE ENCLOSURE AND BRAKING RESISTOR DIMENSIONS SHOWN ARE FOR REFERENCE ONLY. ACTUAL DIMENSIONS SHALL BE PROVIDED BY THE MANUFACTURER.
2. CONTRACTOR SHALL PROVIDE ALL NECESSARY WIRING FOR THE DRIVES, MOTORS AND THE BRAKING RESISTORS.

Canada

Public Works and Government Services Canada
REAL PROPERTIES BRANCH

PARSONS

Verify all dimensions and conditions on site and immediately notify the Departmental Representative of all discrepancies.

SOB ENGINEERING

LICENSED PROFESSIONAL ENGINEER G. T. REES 100120262 PROVINCE OF ONTARIO

revisions	description	date
A	ISSUED FOR TENDER	15-NOV-17

A detail no.
B location drawing no.
C drawing no.

project
MOTOR CONTROLS
LASALLE CAUSEWAY
BASCULE BRIDGE

KINGSTON, ONTARIO

drawing
OPERATORS HOUSE
ELECTRICAL LAYOUT

Designed By L. Xu
Date
Drawn By L. Xu
Date
Reviewed By G. REES
Date
Approved By M. MANSFIELD
Date
Tender
R GRATL
Project Manager
Project no. R.089507.020
Drawing no. E-06

LEGENDS:

- PUSH BUTTON
- INDICATOR LIGHT
  G – GREEN
  Y – YELLOW
  R – RED
- SELECTOR
- KEYED SWITCH
- E–STOP

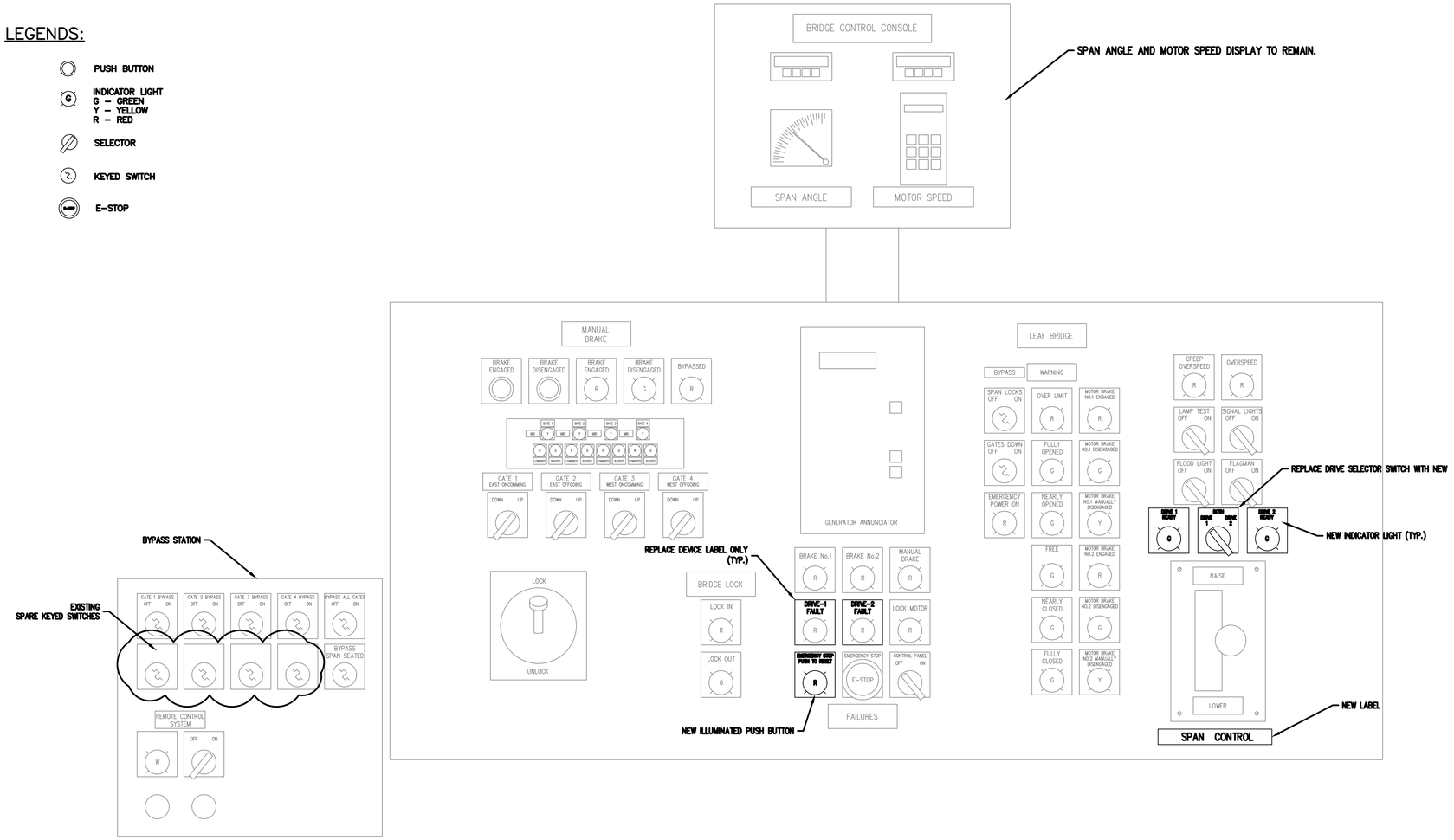

CONTROL CONSOLE PLAN VIEW

SCALE: NTS

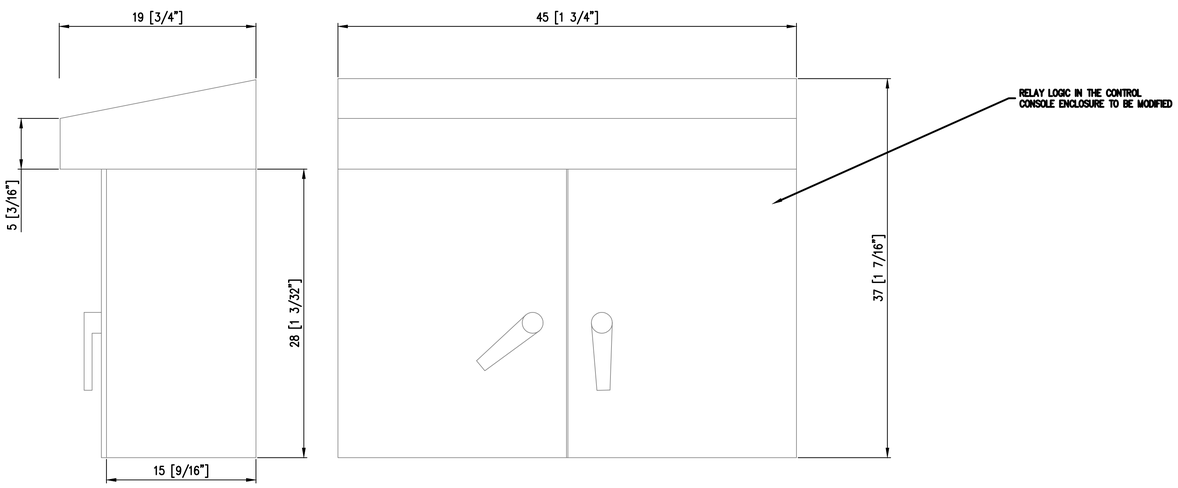

EXISTING CONTROL CONSOLE ELEVATION

SCALE: NTS

NOTES:

1. THE EXISTING RELAY LOGIC TO BE MODIFIED FOR THE NEW DRIVE AND MOTOR PROJECT. THE CONTROL AND INDICATION DEVICES ON THE CONSOLE TOP ARE TO REMAIN BUT WITH THE NECESSARY AND INDICATED NEW DEVICES AND LABELING ADDED.
2. THE EXISTING CONTROL CONSOLE DIMENSIONS ARE PROVIDED FOR REFERENCE ONLY.

Canada

Public Works and Government Services Canada

REAL PROPERTIES BRANCH

PARSONS

Verify all dimensions and conditions on site and immediately notify the Departmental Representative of all discrepancies.

SB ENGINEERING

LICENSED PROFESSIONAL ENGINEER G. T. REES 100120262 PROVINCE OF ONTARIO

revisions	description	date
A	ISSUED FOR TENDER	15-NOV-17

A detail no.
B location drawing no.
C drawing no.

project
MOTOR CONTROLS
LASALLE CAUSEWAY
BASCULE BRIDGE

KINGSTON, ONTARIO

drawing
CONTROL CONSOLE MODIFICATION

Designed By L. Xu
Date
Drawn By L. Xu
Date
Reviewed By G. REES
Date
Approved By M. MANSFIELD
Date
Tender
R.GRATL
Project Manager
Project no. R.089507.020
Drawing no. E-07

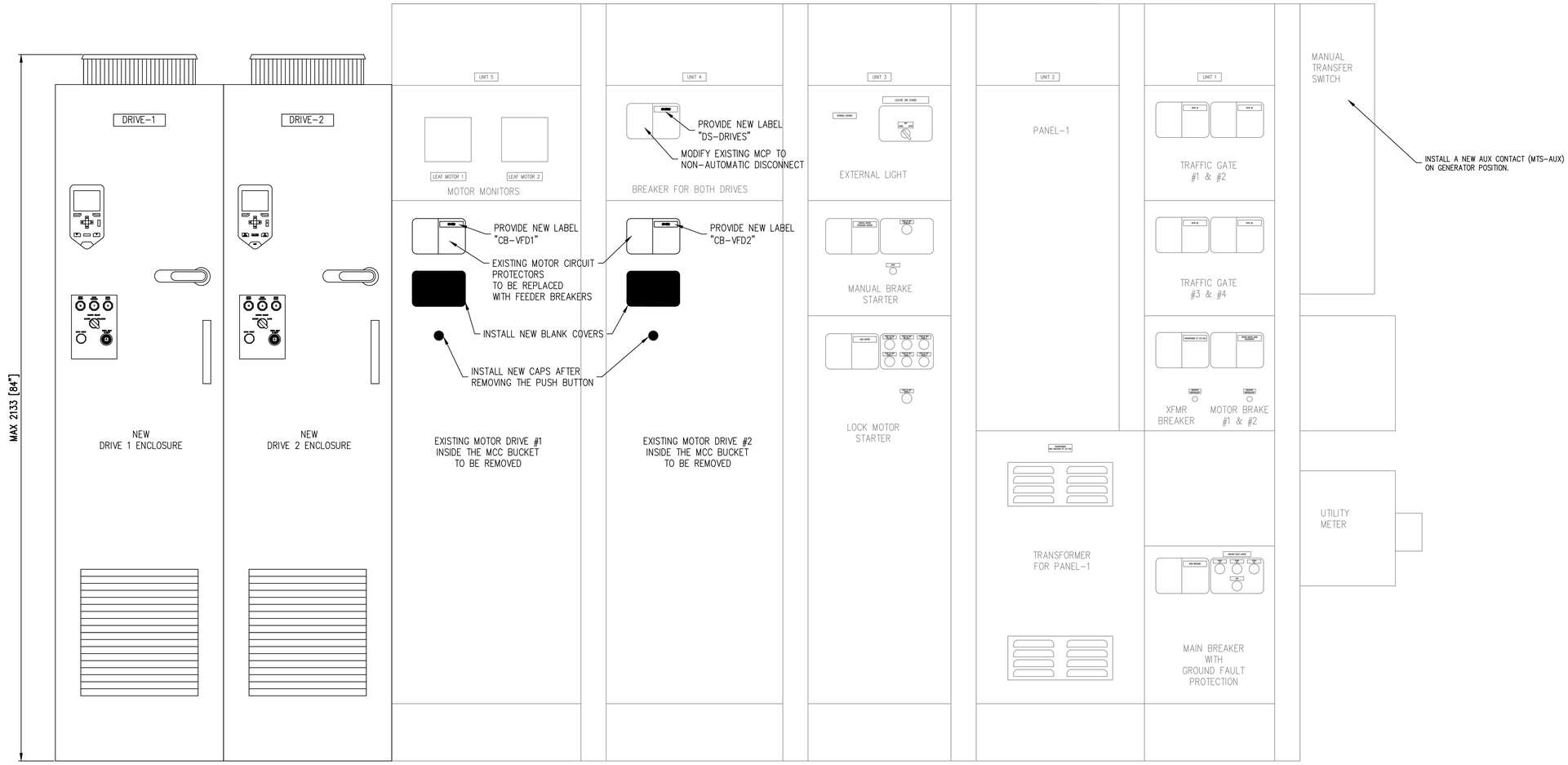

MCC AND DRIVE ELEVATION

SCALE: NTS

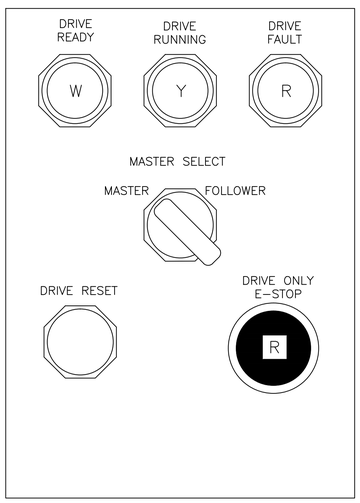

DRIVE FRONT CONTROL PANEL LAYOUT

SCALE: NTS

NOTES:

1. **DRIVE ENCLOSURE ELEVATION AND PANEL LAYOUT ARE PROVIDED FOR REFERENCE ONLY. DRIVE MANUFACTURER SHALL PROVIDE DRIVE ENCLOSURE SHOP DRAWING FOR REVIEW.**
2. **CONTRACTOR SHALL INSTALL ALL NECESSARY WIRING TO THE DRIVES TO COMPLETE THE DRIVE CONTROL CIRCUITS IN ACCORDANCE WITH APPROVED DRIVE SHOP DRAWINGS..**

Canada

Public Works and Government Services Canada

REAL PROPERTIES BRANCH

PARSONS

Verify all dimensions and conditions on site and immediately notify the Departmental Representative of all discrepancies.

SOB ENGINEERING

LICENSED PROFESSIONAL ENGINEER G. T. REES 100120262 11/15/17 PROVINCE OF ONTARIO

revisions	description	date
A	ISSUED FOR TENDER	15-NOV-17

A detail no.
B location drawing no.
C drawing no.

project

MOTOR CONTROLS
LASALLE CAUSEWAY
BASCULE BRIDGE

KINGSTON, ONTARIO

drawing

MCC AND DRIVE ELEVATION

Designed By L. Xu
Date
Drawn By L. Xu
Date
Reviewed By G. REES
Date
Approved By M. MANSFIELD
Date
Tender
Project Manager R GRATL
Project no. R.089507.020
Drawing no. E-08

PANEL	1		SCHEDULE						
PANEL LOCATION			MCC					42	CKT
120/208 VOLTS, SINGLE PHASE, 3 WIRES				A	B			65	KAIC
C.B.	C.B.	WATTS	LOAD DESCRIPTION	CKT.	CKT.	LOAD DESCRIPTION	WATTS	C.B.	C.B.
POLE	TRIP			NO.	NO.			TRIP	POLE
NO.	AMPS							AMPS	NO.
1	15		CONTROL ROOM LIGHTING	1	2	CONTROL ROOM RECEPTACLE		15	1
1	15		LIFT BRIDGE LIGHTS	3	4	MOTOR ROOM		20	1
1	15		LIFT BRIDGE LIGHTS	5	6	PIER LIGHTS		15	1
1	20		FAR EAST ST. LIGHT	7	8	MARINE PLUGS		15	1
1	20		WEST BRIDGE LIGHTS	9	10	SPARE		15	1
1	20		POLE LIGHTS	11	12	NEAR EAST ST LIGHTS		20	1
2	20		ELECTRIC HEAT	13	14	ELECTRIC HEAT		20	2
				15	16				
1	15		SPARE	17	18	MARINE NAV LIGHTS		15	1
1	15		LEAF MOTOR HEATERS	19	20	**NEW UPS FEEDER**		15	1
1	15		**TRAFFIC LIGHTS**	21	22	FLOOD LIGHT		15	1
1	15		STREET LIGHT CONTACTOR	23	24	AIR CONDITIONER		25	2
1	15		FLAGMAN	25	26				
1	15		HEATER, SPAN LOCK MOTOR	27	28	SPARE		15	1
2	30		MOTOR ROOM HEATER	29	30	SUB-FEED, OFFICE BLDG.		60	2
				31	32				
1	15		GENERATOR RECEPTACLE	33	34	SOUTH PLUG		15	1
1	15			35	36	EAST PLUG		15	1
1			BLANK	37	38	NORTH PLUG		15	1
1			BLANK	39	40	WEST PLUG		15	1
1			BLANK	41	42	BLANK			1

TRAFFIC LIGHT POWER TO BE SEPARATED FROM EXISTING CONTROL POWER FEED

PANEL–1 CIRCUIT MODIFICATION

NEW UPS, 1.5 KVA 120V SINGLE PHASE		
CKT. NO.	LOAD DESCRIPTION	TRIP
1	CONSOLE CONTROL POWER	15A
2	SPARE	5A
3	SPARE	5A
4	UPS POWERED RECEPTACLE	10A
5		
6		

UPS POWER DISTRIBUTION

NOTES:

1. **PANEL–1 CIRCUIT TO TO BE MODIFIED AS INDICATED.**
2. **UPS TO BE INSTALLED IN A ENCLOSURE. ALL UPS CONNECTIONS SHALL BE HARDWIRED.**
3. **TRAFFIC LIGHT CIRCUIT TO BE INVESTIGATED AND MODIFIED IN THE FIELD.**

Canada

Public Works and Government Services Canada

REAL PROPERTIES BRANCH

PARSONS

Verify all dimensions and conditions on site and immediately notify the Departmental Representative of all discrepancies.

SOB ENGINEERING

LICENSED PROFESSIONAL ENGINEER G. T. REES 100120262 PROVINCE OF ONTARIO

revisions	description	date
A	ISSUED FOR TENDER	15-NOV-17

A detail no.
B location drawing no.
C drawing no.

project

MOTOR CONTROLS
LASALLE CAUSEWAY
BASCULE BRIDGE

KINGSTON, ONTARIO

drawing

PANEL-1 AND UPS SCHEDULE

Designed By L. Xu
Date

Drawn By L. Xu
Date

Reviewed By G. REES
Date

Approved By M. MANSFIELD
Date

Tender
R GRATL
Project Manager

Project no. R.089507.020

Drawing no. E-09

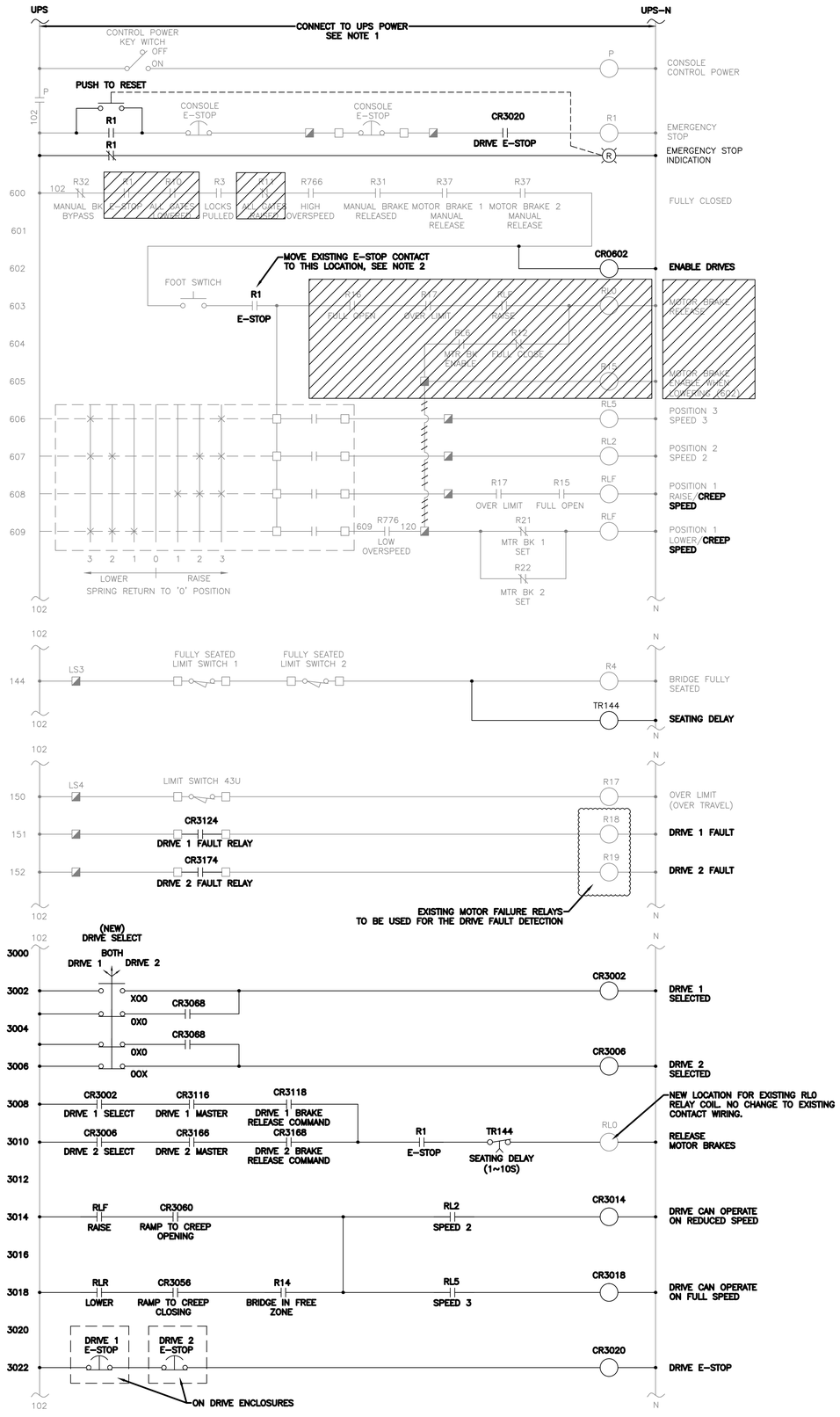

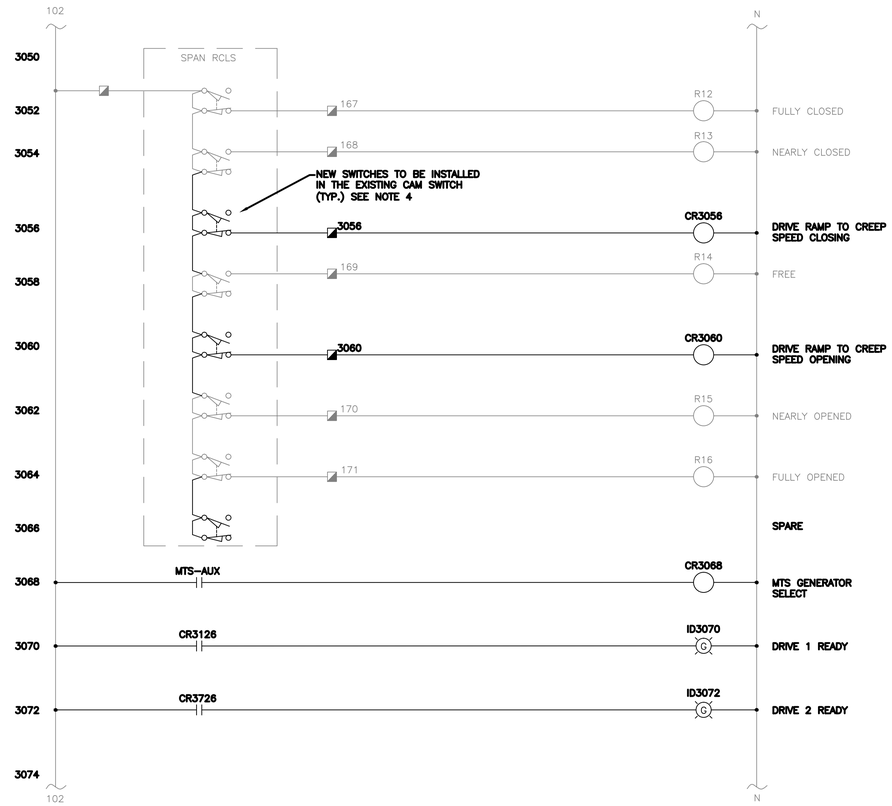

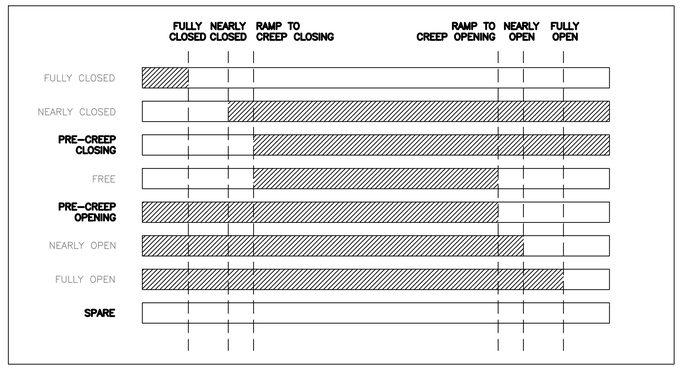

SPAN RCLS LIMIT SWITCH DEVELOPMENT

NOTES:

1. CONSOLE CONTROL POWER SHALL BE CONNECTED TO THE NEW UPS.
2. JUMPERS SHOULD BE INSTALLED TO COMPLETE THE CIRCUIT WHEN REMOVING DEVICES FROM THE CIRCUIT AS INDICATED. SOME DEVICES INDICATED TO BE REMOVED ARE TO BE REUSED FOR CONTROL CIRCUIT AS INDICATED.
3. CONTRACTOR SHALL FIELD ADJUST EXISTING ROTARY CAM SWITCH TO ACHIEVE PROPER CONTROL AS INDICATED ABOVE.
4. EXISTING ROTARY CAM SWITCH TO REMAIN WITH ADDITIONAL MICRO SWITCHES INSTALLED IN THE ROTARY CAM SWITCH (NEW MICRO SWITCH TO BE OMRON D4A-2505N OR ENGINEER APPROVED EQUAL)

Canada

Public Works and Government Services Canada
REAL PROPERTIES BRANCH

PARSONS

Verify all dimensions and conditions on site and immediately notify the Departmental Representative of all discrepancies.

SOB ENGINEERING

LICENSED PROFESSIONAL ENGINEER G. T. REES 100120282 11/15/17 PROVINCE OF ONTARIO

revisions	description	date
A	ISSUED FOR TENDER	15-NOV-17

A detail no.
B location drawing no.
C drawing no.

project
MOTOR CONTROLS
LASALLE CAUSEWAY
BASCULE BRIDGE
KINGSTON, ONTARIO

drawing
CONTROL LOGIC MODIFICATION

Designed By L. Xu
Date
Drawn By L. Xu
Date
Reviewed By G. REES
Date
Approved By M. MANSFIELD
Date
Tender
R GRATL
Project Manager
Project no. R.089507.020
Drawing no. E-10

Page Setup: ----
Plot Date: Wednesday, November 15, 2017 3:13:43 PM
Last Saved: Lin
Consultant's Information: M:\SBES8790\S8790 - Parsons Lasalle On Call\8790A Motor And Drive Replacement\Electrical\ACAD\E10 - Control Logic Modification.dwg
PWGSC B1 (1000 x 707)

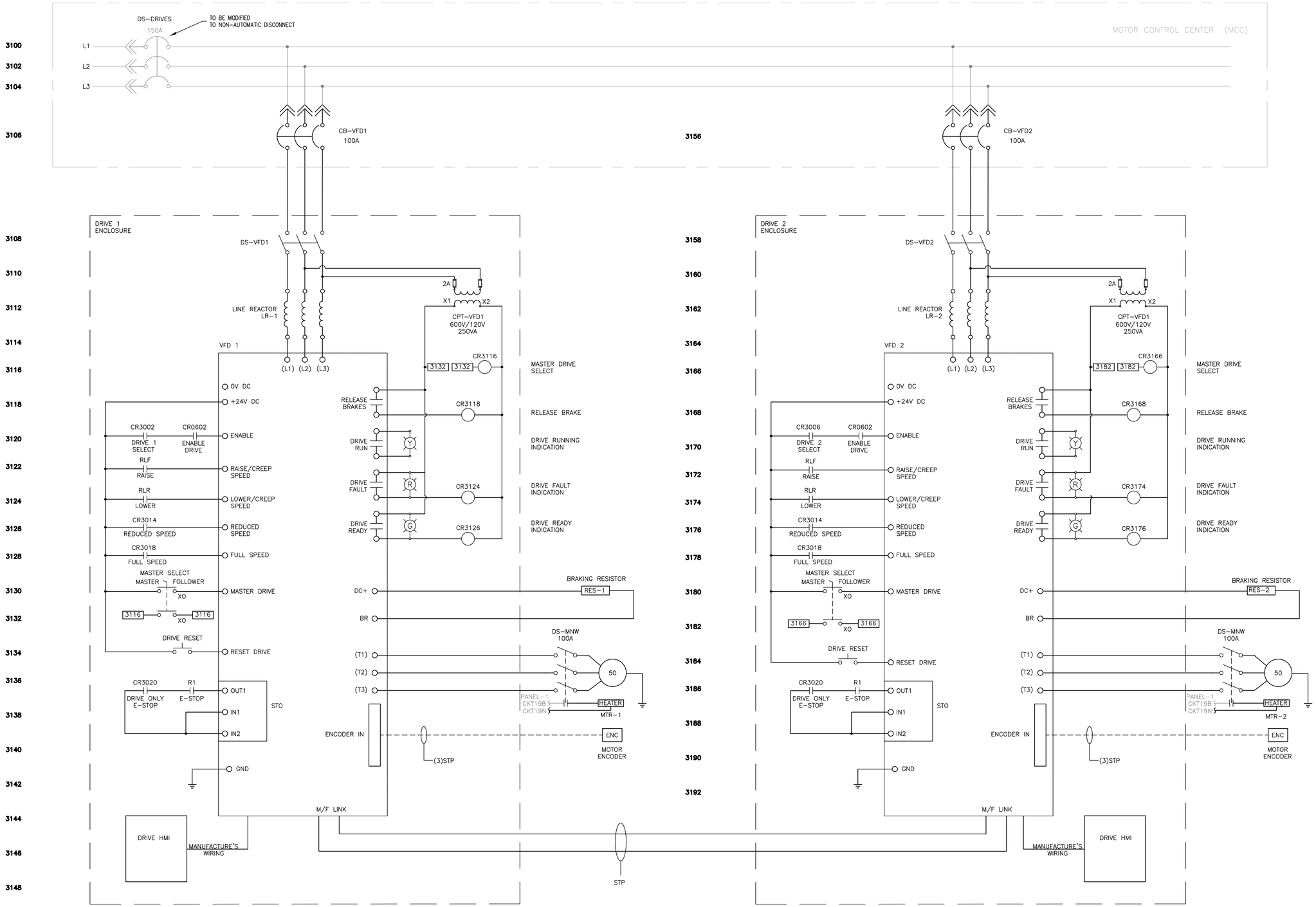

NOTES:

1. DRIVE ENCLOSURE CONFIGURATION AND WIRING ARE PROVIDED FOR REFERENCE ONLY. DRIVE MANUFACTURER'S SHOP DRAWING SHALL BE SUBMITTED FOR REVIEW AND COORDINATION.

Canada

Public Works and Government Services Canada

REAL PROPERTIES BRANCH

PARSONS

Verify all dimensions and conditions on site and immediately notify the Departmental Representative of all discrepancies.

SOB ENGINEERING

LICENSED PROFESSIONAL ENGINEER G. T. REES 100120262 PROVINCE OF ONTARIO

revisions	description	date
A	ISSUED FOR TENDER	15-NOV-17

A detail no. B location drawing no. C drawing no.

project

MOTOR CONTROLS
LASALLE CAUSEWAY
BASCULE BRIDGE

KINGSTON, ONTARIO

drawing

DRIVE CONTROL DIAGRAM

Designed By L. Xu
Date
Drawn By L. Xu
Date
Reviewed By G. REES
Date
Approved By M. MANSFIELD
Date
Tender
Project Manager R GRATL
Project no. R.089507.020
Drawing no. E-11

Page Setup: ----

Plot Date: Wednesday, November 15, 2017 4:01:28 PM

Last Saved: Lin

Consultant's information: M:\SBE\SB790-\SB790 - Parsons Lasalle On Call\SB790A Motor And Drive Replacement\Electrical\ACAD\E11 - Drive Control Diagram.dwg

PWGSC B1 (1000 x 707)

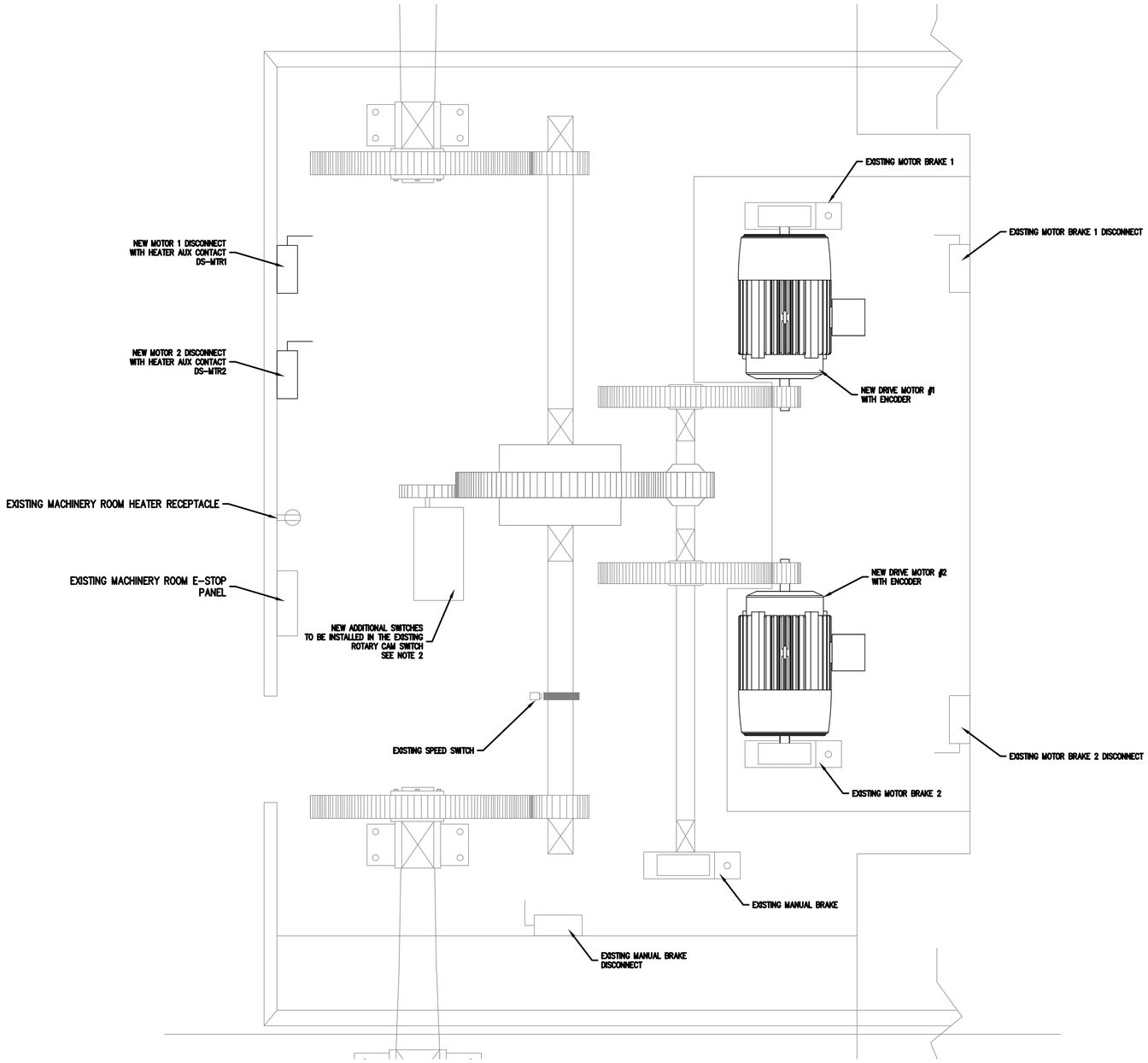

MACHINERY ROOM LAYOUT

SCALE: NTS

NOTES:

1. THE LEAF MOTOR HEATERS TO BE WIRED THROUGH THE CORRESPONDING DISCONNECT AUX CONTACT.
2. CONTRACTOR SHALL PROCURE COMPATIBLE SWITCHES (OMRON D4A-2505N) AND INSTALL IN THE EXISTING CAM SWITCH AS DESCRIBED ON DWG E-10.
3. MACHINERY SPACE LAYOUT SHOWN IS FOR REFERENCE ONLY FOR ELECTRICAL WORK IDENTIFICATION. SEE MECHANICAL DRAWINGS FOR THE MACHINERY DETAILS.

Canada

Public Works and Government Services Canada

REAL PROPERTIES BRANCH

PARSONS

Verify all dimensions and conditions on site and immediately notify the Departmental Representative of all discrepancies.

SOB ENGINEERING

LICENSED PROFESSIONAL ENGINEER G. T. REES 100120262 PROVINCE OF ONTARIO

revisions	description	date
A	ISSUED FOR TENDER	15-NOV-17

A detail no. / B location drawing no. / C drawing no.

project

MOTOR CONTROLS
LASALLE CAUSEWAY
BASCULE BRIDGE

KINGSTON, ONTARIO

drawing

MACHINERY ROOM
ELECTRICAL MODIFICATIONS

Designed By L. Xu
Date

Drawn By L. Xu
Date

Reviewed By G. REES
Date

Approved By M. MANSFIELD
Date

Tender
R.GRATL
Project Manager

Project no. R.089507.020

Drawing no. E-12

Page Setup: ----

Plot Date: Wednesday, November 15, 2017 3:13:53 PM

Last Saved: Lin

Consultant's Information: M:\SBE\SB790-\SB790 - Parsons Lasalle On Cal\SB790A Motor And Drive Replacement\Electrical\ACAD\E12-Machinery Room Electrical Details.dwg

PWGSC B1 (1000 x 707)

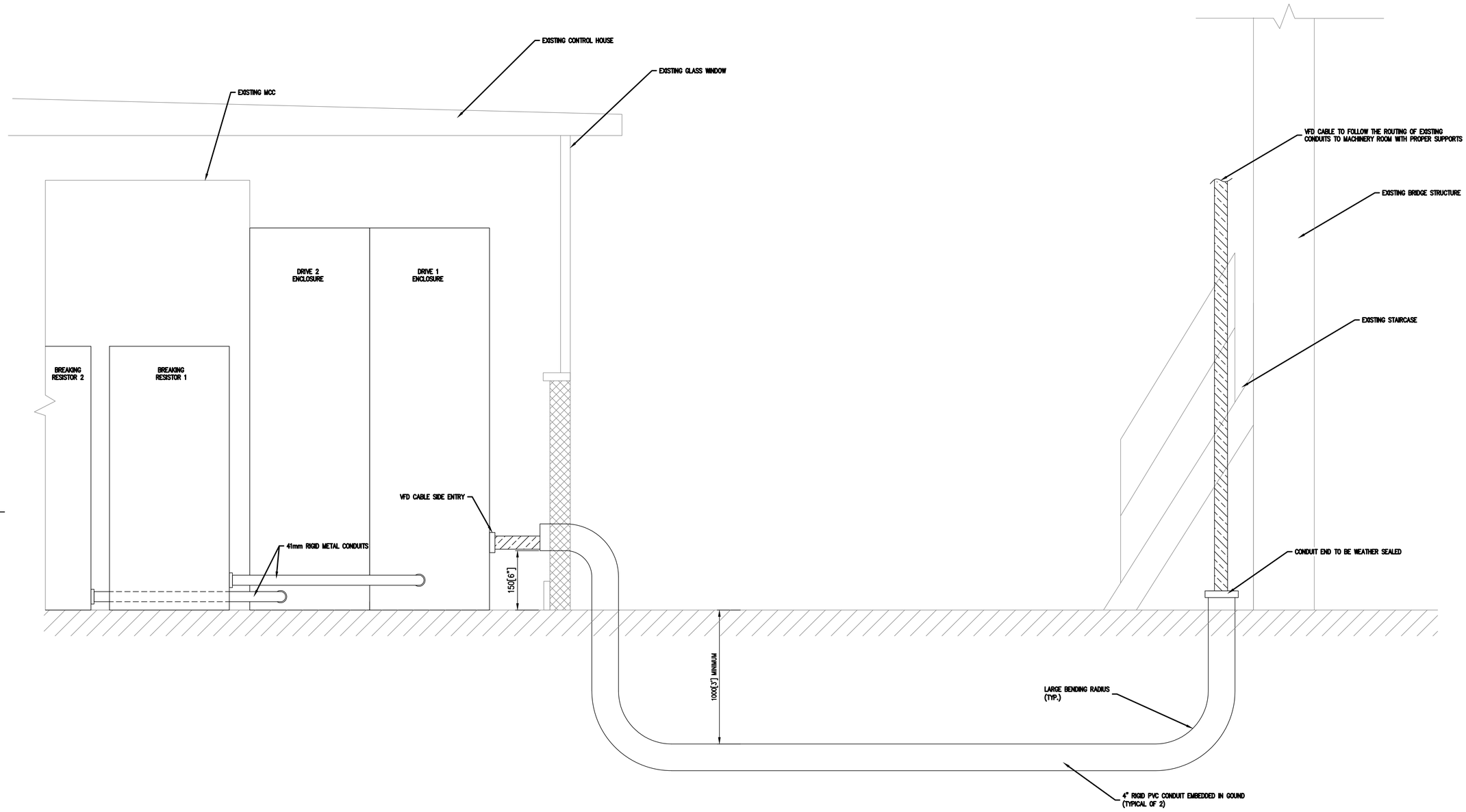

VFD CABLES AND CONDUIT ROUTING DETAILS

SCALE: NTS

NOTES:

1. CONDUIT AND VFD CABLE ROUTING SHOWN FOR REFERENCE ONLY. CONTRACTOR SHALL SUBMIT THE VFD AND CONDUIT ROUTING SHOP DRAWINGS FOR REVIEW PRIOR TO INSTALLATION.

Canada

Public Works and Government Services Canada

REAL PROPERTIES BRANCH

PARSONS

Verify all dimensions and conditions on site and immediately notify the Departmental Representative of all discrepancies.

SOB ENGINEERING

LICENSED PROFESSIONAL ENGINEER G. T. REES 100120262 PROVINCE OF ONTARIO

revisions	description	date
A	ISSUED FOR TENDER	15-NOV-17

A detail no.
B location drawing no.
C drawing no.

project

MOTOR CONTROLS
LASALLE CAUSEWAY
BASCULE BRIDGE

KINGSTON, ONTARIO

drawing

VFD CABLE AND CONDUIT ROUTING DETAILS

Designed By L. Xu
Date
Drawn By L. Xu
Date
Reviewed By G. REES
Date
Approved By M. MANSFIELD
Date
Tender
R.GRATL
Project Manager
Project no. R.089507.020
Drawing no. E-13

Consultant's Information: M:\SBE\SB790-\SB790 - Parsons Lasalle On Call\SB790A Motor And Drive Replacement\Electrical\ACAD\E13 - VFD Cable Conduit Routing Details.dwg Last Saved: Lin Plot Date: Wednesday, November 15, 2017 3:13:58 PM

PWGSC B1 (1000 x 707)

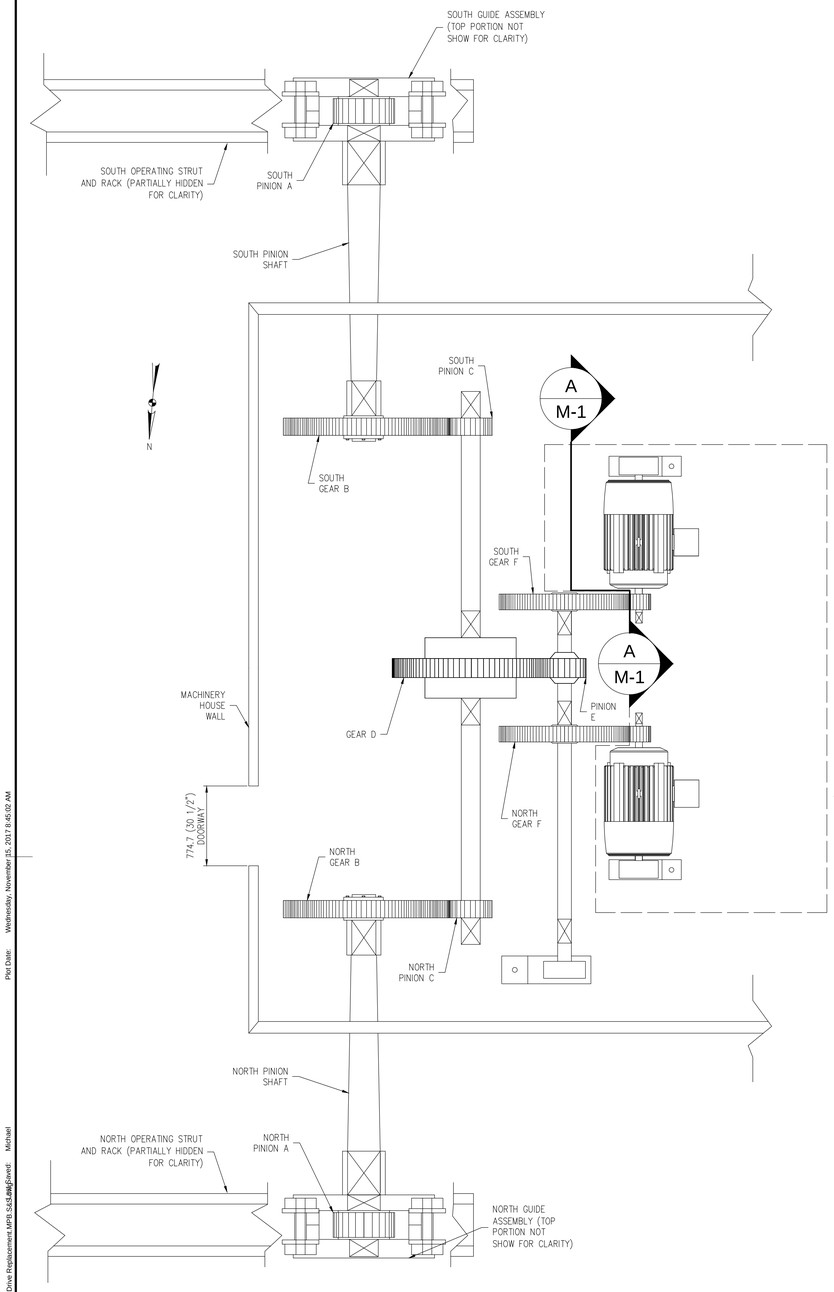

PLAN VIEW OF EXISTING SPAN DRIVE MACHINERY
IDENTIFICATION OF WORK
NOT TO SCALE

SUGGESTED CONSTRUCTION SEQUENCE:

1. FIELD VERIFY ALL PERTINENT DIMENSIONS AS PART OF THE DEVELOPMENT OF THE SHOP DRAWINGS.
2. DOCUMENT EXISTING MOTOR SHAFT AND PINION LOCATION AND ESTABLISH BENCHMARKS TO FACILITATE ALIGNMENT OF MK5 MOTOR SUPPORT PLATE. DETERMINE THE REQUIRED THICKNESS OF THE FILL PLATES BETWEEN THE MK5 MOTOR SUPPORT PLATE AND THE EXISTING SUPPORT STEEL.
3. PROTECT EXISTING COMPONENTS WHICH ARE TO REMAIN FROM CONTAMINATION FROM CONSTRUCTION DEBRIS.
4. REMOVE EXISTING COMPONENTS. TAKE CARE NOT TO DAMAGE THE EXISTING BRAKE ASSEMBLIES WHICH ARE TO BE REUSED OR THE EXISTING SUPPORT STEEL WHICH IS TO REMAIN.
5. SHOP WORK:

5.1. LAY OUT THE HOLES FOR THE NEW MOUNTING BOLTS BETWEEN THE MK4 MOTOR MOUNTING PLATE AND THE NEW MOTOR.
5.2. DRILL AND MILL THE SLOTS FOR THE MOTOR MOUNTING BOLTS IN THE MK4 MOTOR MOUNTING PLATE.
5.3. TEMPORARILY BOLT THE NEW MOTOR WITH THE PINION AND BRAKE WHEEL INSTALLED ON THE SHAFTS IN PLACE ON THE MK4 MOTOR MOUNTING PLATE. DRILL DOWEL PIN HOLES IN THE MOTOR FOOT AND THE MK4 MOTOR MOUNTING PLATE.
5.4. SET THE EXISTING BRAKE ASSEMBLY IN PLACE ON THE MK4 MOTOR MOUNTING PLATE WITH NOMINAL SHIMS AND THE ASSEMBLY CENTERED ON THE BRAKE WHEEL. MARK THE HOLE LOCATIONS FOR THE BRAKE ASSEMBLY MOUNTING BOLTS ON THE MK4 MOTOR MOUNTING PLATE.
5.5. DRILL AND MILL THE SLOTS FOR THE BRAKE MOUNTING BOLTS IN THE MK4 MOTOR MOUNTING PLATE.
5.6. INSTALL DOWEL PINS AND PERMANENT MOUNTING BOLTS FOR THE MOTOR AND BRAKE ASSEMBLY TO COMPLETE THE SUB-ASSEMBLY
5.7. ADJUST THE BRAKE TO PROVIDE THE REQUIRED TORQUE WITH THE PROPER RESERVE STROKE PER THE MANUFACTURER'S INSTRUCTIONS. MOUNT AN ADAPTER TO THE BRAKE WHEEL AND PHYSICALLY VERIFY THE TORQUE SETTINGS WITH A TORQUE WRENCH.

6. FIELD WORK:

6.1. PREP THE FAYING SURFACES OF THE EXISTING SUPPORT STEEL FOR THE NEW FILL PLATES.
6.2. LAY OUT THE HOLES FOR THE NEW MOUNTING BOLTS BETWEEN THE MK5 MOTOR SUPPORT PLATE AND THE EXISTING SUPPORT STEEL.
6.3. DRILL AND COUNTERSINK THE HOLES FOR THE MK5 MOTOR SUPPORT PLATE.
6.4. INSTALL AND TEMPORARILY BOLT UP THE MK5 MOTOR SUPPORT PLATE AND THE FILL PLATES TO THE EXISTING SUPPORT STEEL. USE A STRAIGHT EDGE AND LEVEL TO VERIFY THAT THE TOP SURFACE OF THE MK5 MOTOR SUPPORT PLATE IS FLAT AND LEVEL WITHIN 0.25MM (0.10") OVER THE ENTIRE SURFACE OF THE PLATE AND THE TOP OF THE PLATE IS AT THE PROPER ELEVATION WITHIN 3MM (1/8"). MACHINE OR MODIFY THE FILL PLATES AS NEEDED TO ACHIEVE THESE REQUIREMENTS.
6.5. SET THE MOTOR/BRAKE/MOUNTING PLATE SUB-ASSEMBLY IN PLACE ON NOMINAL SHIMS.
6.6. ADJUST SHIMS AS NEEDED AND ALIGN THE SUB-ASSEMBLY SO THAT THE NEW PINION G MATES WITH THE EXISTING GEAR F. TEMPORARILY CLAMP THE MK4 MOTOR MOUNTING PLATE TO THE MK5 MOTOR SUPPORT PLATE AND DOCUMENT ACCEPTABLE BACKLASH, TIP CLEARANCE, AND CROSS MESH.
6.7. DRILL HOLES FOR THE MOUNTING BOLTS TROUGH THE MK4 MOTOR MOUNTING PLATE AND THE MK5 MOTOR SUPPORT PLATE. INSTALL AND TIGHTEN THE PERMANENT BOLTS AND DOCUMENT ACCEPTABLE BACKLASH, TIP CLEARANCE, AND CONTACT.
6.8. MOUNT AN ADAPTER TO THE BRAKE WHEEL AND PHYSICALLY VERIFY THE TORQUE SETTINGS WITH A TORQUE WRENCH.
6.9. OPERATE THE LEAF AND DOCUMENT FINAL GEAR ALIGNMENT (BACKLASH, TIP CLEARANCE, CROSS MESH, AND CONTACT) AT FOUR EQUALLY SPACED LOCATIONS AROUND GEAR F.
6.10. CLEAN THE EXISTING GREASE FROM ALL OPEN GEARING WITHIN THE MACHINERY HOUSE AND APPLY FRESH GREASE.
6.11. PURGE ALL BEARING WITH FRESH GREASE AND CLEAN UP EXCESS LUBRICANT THAT ESCAPES FROM THE BEARINGS.
6.12. COMMISSION THE NEW MOTORS AND DRIVES.

MOTOR REPLACEMENT SCHEDULE

MK. NO.	QTY.	COMPONENT	DESCRIPTION
MK1	2	NEW MOTOR PINION G	NEW FORGED STEEL GEAR
MK2	2	NEW BRAKE WHEEL	NEW MAGNETEK BRAKE WHEEL
MK3	4	NEW MOTOR PINION AND BRAKE KEY	NEW FORGED STEEL KEY
MK4	2	NEW MOTOR MOUNTING PLATE	NEW STEEL PLATE
MK5	2	NEW MOTOR SUPPORT PLATE	NEW STEEL PLATE
MK6	2	NEW MOTOR	NEW MOTOR

NOTES:

1. FILL PLATE THICKNESS IS TO BE FIELD VERIFIED IN ORDER TO BRING MK5 MOTOR SUPPORT PLATE LEVEL TO WITHIN 0.25MM (0.010") OVER THE ENTIRE SURFACE OF THE PLATE WITH MK5 MOUNTING BOLTS TIGHT. FILL PLATES ARE TO BE MADE FROM CSA G40.21-04 GRADE 350W STEEL.

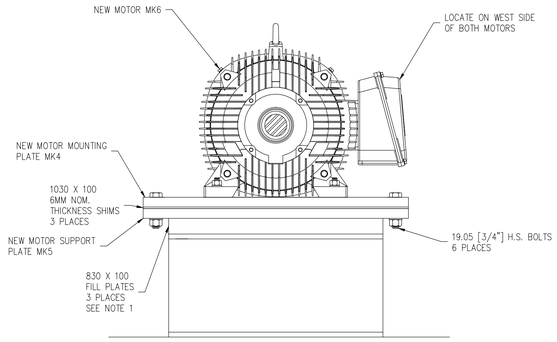

VIEW
ELEVATION VIEW OF NEW MOTOR AND SUPPORT
NOT TO SCALE
B
M-1

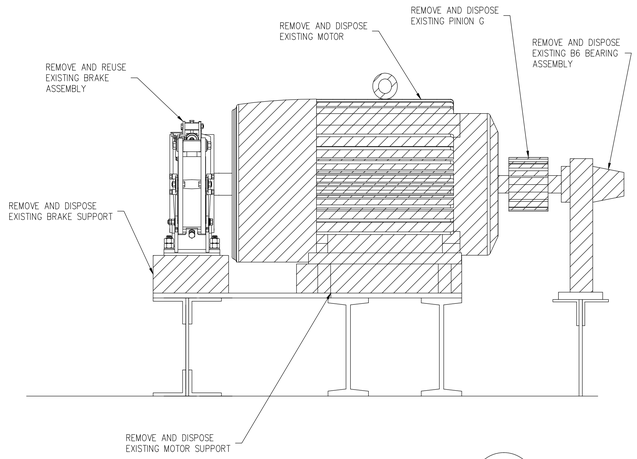

VIEW
ELEVATION VIEW
EXISTING IDENTIFICATION OF WORK
NOT TO SCALE
A
M-1

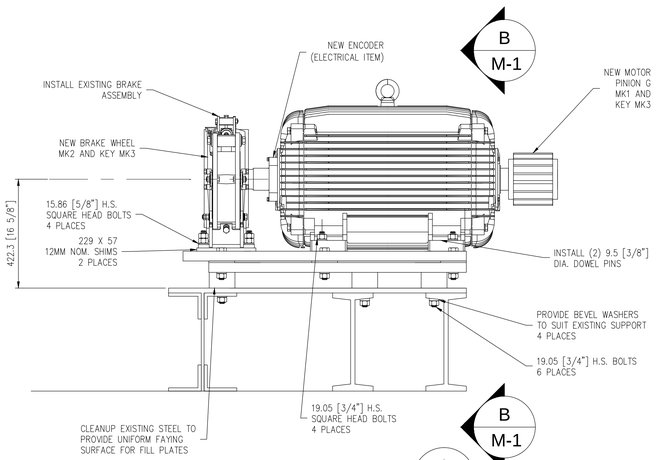

VIEW
ELEVATION VIEW
NEW IDENTIFICATION OF WORK
NOT TO SCALE
A
M-1

Canada

Public Works and Government Services Canada
REAL PROPERTIES BRANCH

PARSONS

Verify all dimensions and conditions on site and immediately notify the Departmental Representative of all discrepancies.

SOB ENGINEERING

LICENSED PROFESSIONAL ENGINEER
J.R. WILLIAMS
100175197
11/15/17
PROVINCE OF ONTARIO

revisions	description	date
A	ISSUED FOR TENDER	15-NOV-17

A detail no.
B location drawing no.
C drawing no.

project
MOTOR CONTROLS
LASALLE CAUSEWAY
BASCULE BRIDGE
KINGSTON, ONTARIO

drawing

Designed By M. DENIS-ROHR
Date
Drawn By M. DENIS-ROHR
Date
Reviewed By J. WILLIAMS
Date
Approved By M. MANSFIELD
Date
Tender
R GRATL
Project Manager
Project no. R.089507.020
Drawing no. M-1

Page Setup: ----
Plot Date: Wednesday, November 15, 2017 8:45:02 AM
Consultant's Information: M:\SBE\SB790\SB790 - Parsons Lasalle On Cat\SB790A Motor And Drive Replacement\CAD\S&S Submits\Motor And Drive Replacement MPB S&S.dwg\Sheet: Michael
PWGSC B1 (1000 x 707)

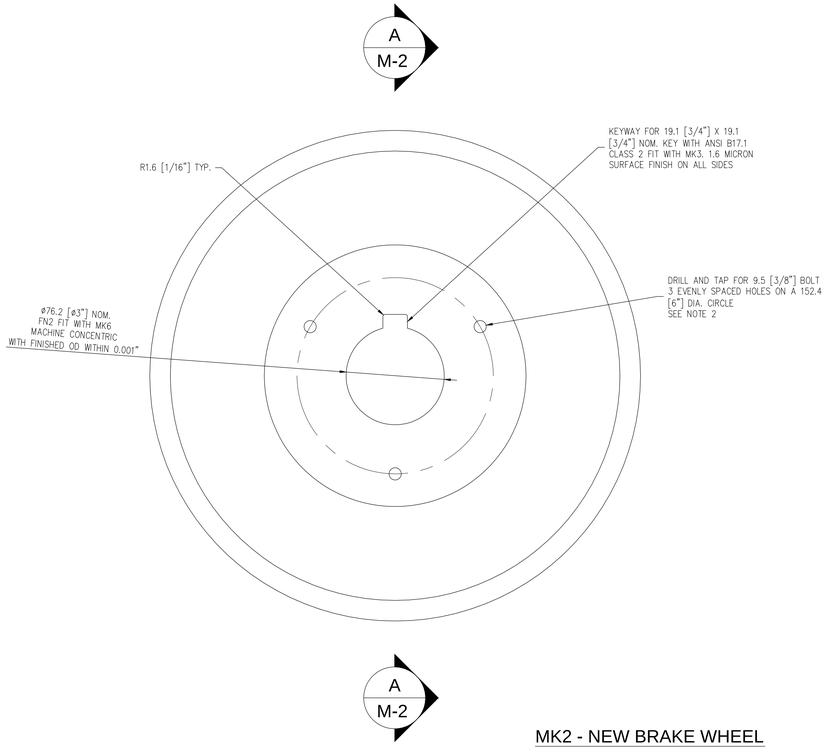

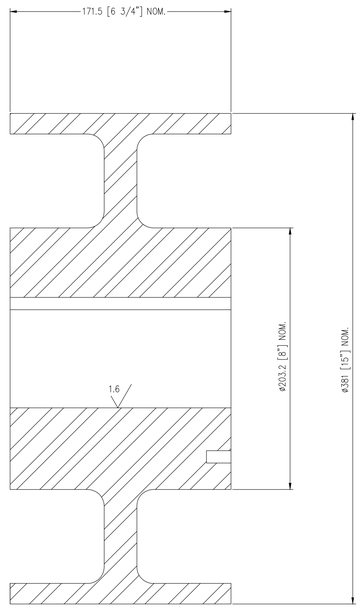

SECTION A / M-2

MK2 - NEW BRAKE WHEEL

QUANTITY: 2 EACH
MATERIAL: SEE NOTE 1

NOTES:

1. PROVIDE NEW BRAKE WHEEL TO SUIT EXISTING BRAKE ASSEMBLY. NEW BRAKE WHEEL SHALL BE SUPPLIED BY THE SAME MANUFACTURER AS THE EXISTING BRAKE ASSEMBLY AND MEET ALL MANUFACTURER REQUIREMENTS.
2. CONTRACTOR TO PROVIDE AN ADAPTER WHICH ATTACHES TO THE 3 BOLT HOLES AND ALLOWS THE BRAKE TORQUE TO BE CHECKED WITH A STANDARD TORQUE WRENCH

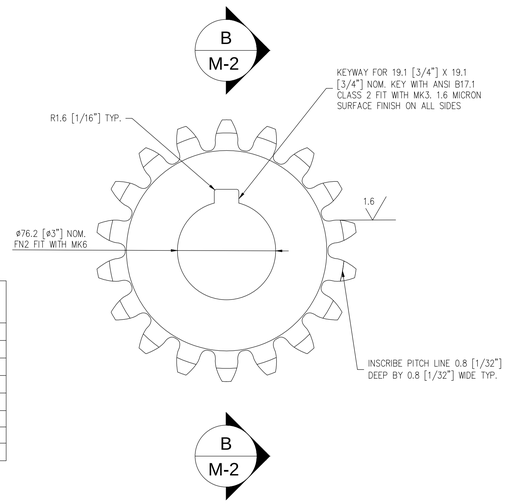

GEAR TOOTH DATA		
NUMBER OF TEETH	18 (UL)	
DIAMETRAL PITCH	63.50 (MM)	2.500 (IN)
PITCH DIAMETER	182.88 (MM)	7.200 (IN)
OUTER DIAMETER	203.20 (MM)	8.000 (IN)
ROOT DIAMETER	157.48 (MM)	6.200 (IN)
PRESSURE ANGLE	20°	
TOOTH FORM	STD. INVOLUTE	
BACKLASH REMOVED	0	

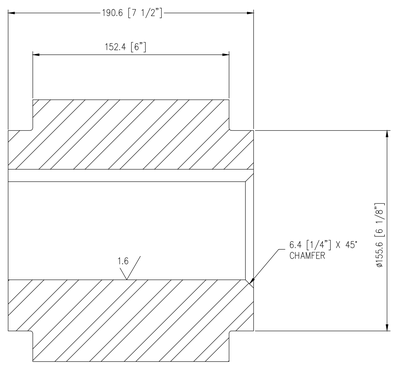

SECTION B / M-2

MK1 - NEW MOTOR PINION G

QUANTITY: 2 EACH
MATERIAL: ASTM A668 CLASS K
PROVIDE 3.2 MICRON SURFACE FINISH
UNLESS NOTED OTHERWISE

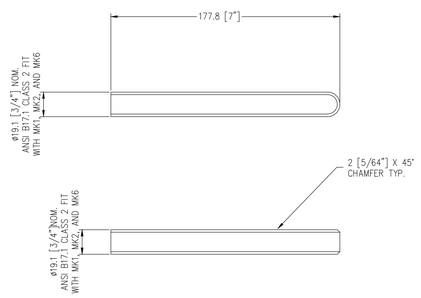

MK3 - NEW MOTOR PINION AND BRAKE KEY

QUANTITY: 4 EACH
MATERIAL: ASTM A668 CLASS D
PROVIDE 1.6 MICRON SURFACE FINISH
UNLESS NOTED OTHERWISE

Canada

Public Works and Government Services Canada

REAL PROPERTIES BRANCH

PARSONS

Verify all dimensions and conditions on site and immediately notify the Departmental Representative of all discrepancies.

SCB ENGINEERING

LICENSED PROFESSIONAL ENGINEER
J.R. WILLIAMS
100175197
11/15/17
PROVINCE OF ONTARIO

revisions	description	date
A	ISSUED FOR TENDER	15-NOV-17

A detail no.
B location drawing no.
C drawing no.

project
MOTOR CONTROLS
LASALLE CAUSEWAY
BASCULE BRIDGE

KINGSTON, ONTARIO

drawing

Designed By M. DENIS-ROHR
Date
Drawn By M. DENIS-ROHR
Date
Reviewed By J. WILLIAMS
Date
Approved By M. MANSFIELD
Date
Tender
R GRATL
Project Manager
Project no. R.089507.020
Drawing no. M-2

Page Setup: ----

NOTES:

1. THE NEW MOTOR IS AN ELECTRICAL ITEM. INSTALLATION BY MECHANICAL CONTRACTOR EXCEPT FOR ELECTRICAL CONNECTIONS. THE NEW MOTOR DIMENSIONS SHALL CONFORM TO NEMA 447T FRAME DIMENSIONS EXCEPT FOR CUSTOM SHAFT DIMENSIONS AS SHOWN. MOTOR MOUNTING HOLES IN MK4 SHALL NOT BE DRILLED UNTIL MOTOR IS AT SHOP AND DIMENSIONS HAVE BEEN VERIFIED.
2. LOCATE HOLES SO THAT THEY ARE A MINIMUM OF 30MM FROM THE EDGE OF THE SUPPORT MEMBER FLANGE OR ANY EXISTING HOLES. AS SHOWN ON DRAWING M-1.

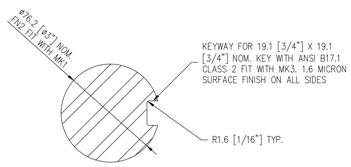

SECTION A / M-3

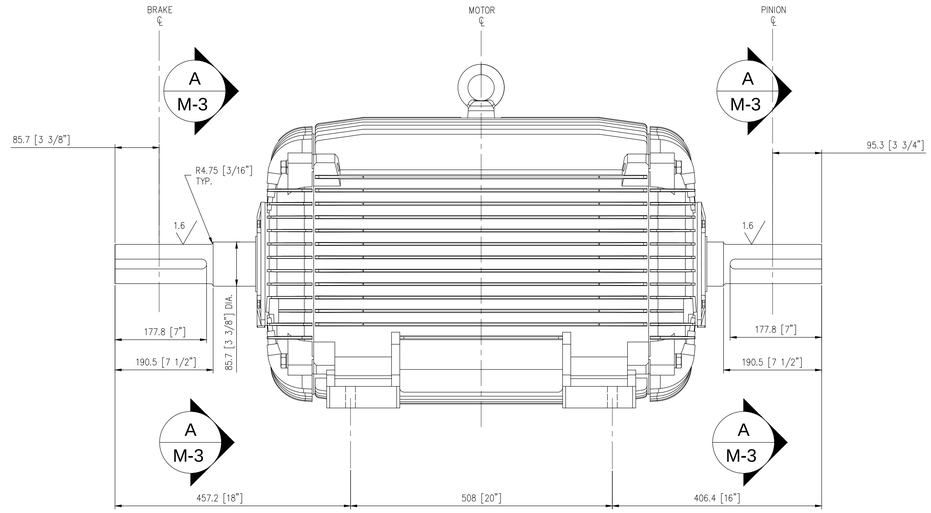

MK6 - NEW MOTOR

QUANTITY: 2 EACH
MATERIAL: NEW MOTOR
SEE NOTE 1

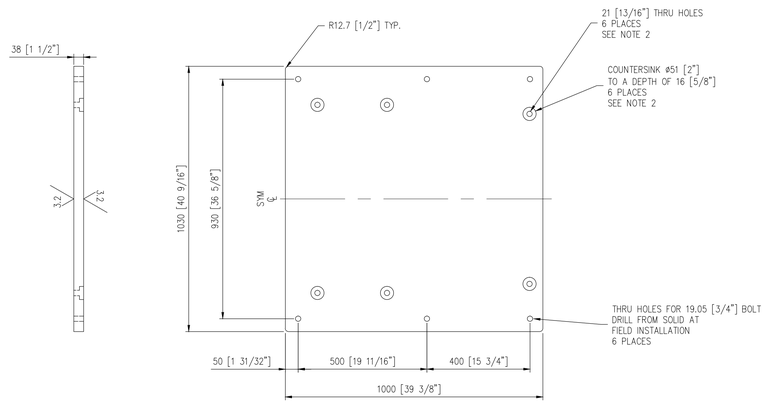

MK5 - NEW MOTOR SUPPORT PLATE

QUANTITY: 2 EACH
MATERIAL: CSA G40.21-04 GRADE 350W
FINISH PLATE ON BOTH SIDES TO BE FLAT WITHIN 0.25 (.010")

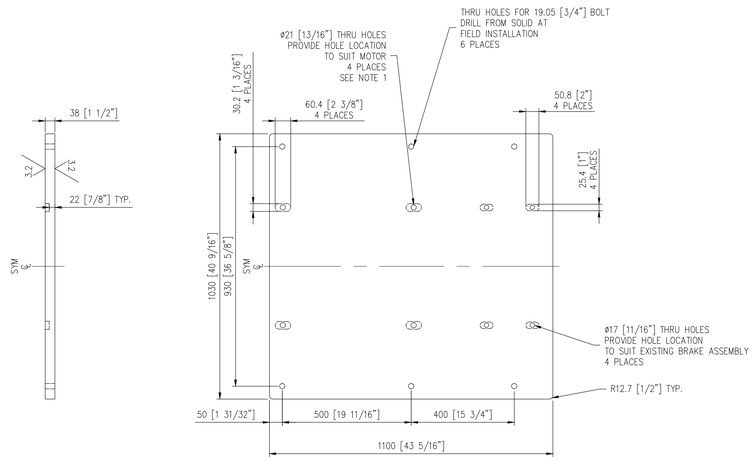

MK4 - NEW MOTOR MOUNTING PLATE

QUANTITY: 2 EACH
MATERIAL: CSA G40.21-04 GRADE 350W
FINISH PLATE ON BOTH SIDES TO BE FLAT WITHIN 0.25 (.010")

Canada

Public Works and Government Services Canada

REAL PROPERTIES BRANCH

PARSONS

Verify all dimensions and conditions on site and immediately notify the Departmental Representative of all discrepancies.

SB ENGINEERING

LICENSED PROFESSIONAL ENGINEER
J. R. WILLIAMS
100175197
11/15/17
PROVINCE OF ONTARIO

revisions	description	date
A	ISSUED FOR TENDER	15-NOV-17

A detail no.
B location drawing no.
C drawing no.

project
MOTOR CONTROLS
LASALLE CAUSEWAY
BASCULE BRIDGE

KINGSTON, ONTARIO

drawing

Designed By M. DENIS-ROHR
Date
Drawn By M. DENIS-ROHR
Date
Reviewed By J. WILLIAMS
Date
Approved By M. MANSFIELD
Date
Tender
Project Manager R GRATL
Project no. R.089507.020
Drawing no. M-3

Plot Date: Wednesday, November 15, 2017 8:45:28 AM

Consultant's Information: M:\SB\SB790-SB790 - Parsons Lasalle On Call\SB790A Motor And Drive Replacement\ACAD\SAS Submittal\Motor And Drive Replacement MPB 5.dwg\Sheet\ Michael

PWGSC B1 (1000 x 707)