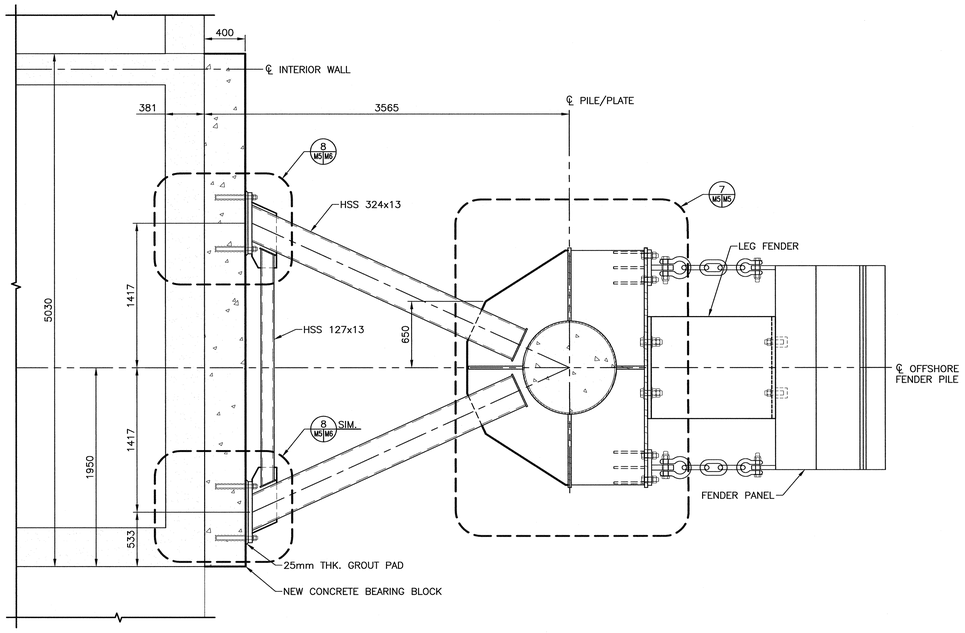

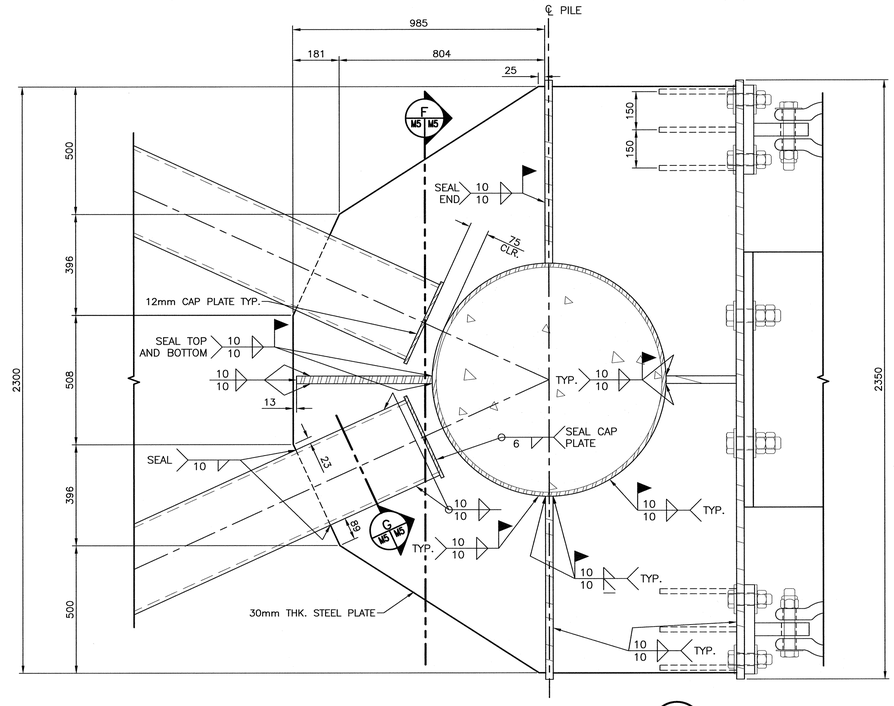

LOWER STRUT CONNECTION TO PILE DETAIL 7 M5 M5 △1

SCALE : 1:10

0mm 100 200 300 400 500 600 700 800 900 1000mm

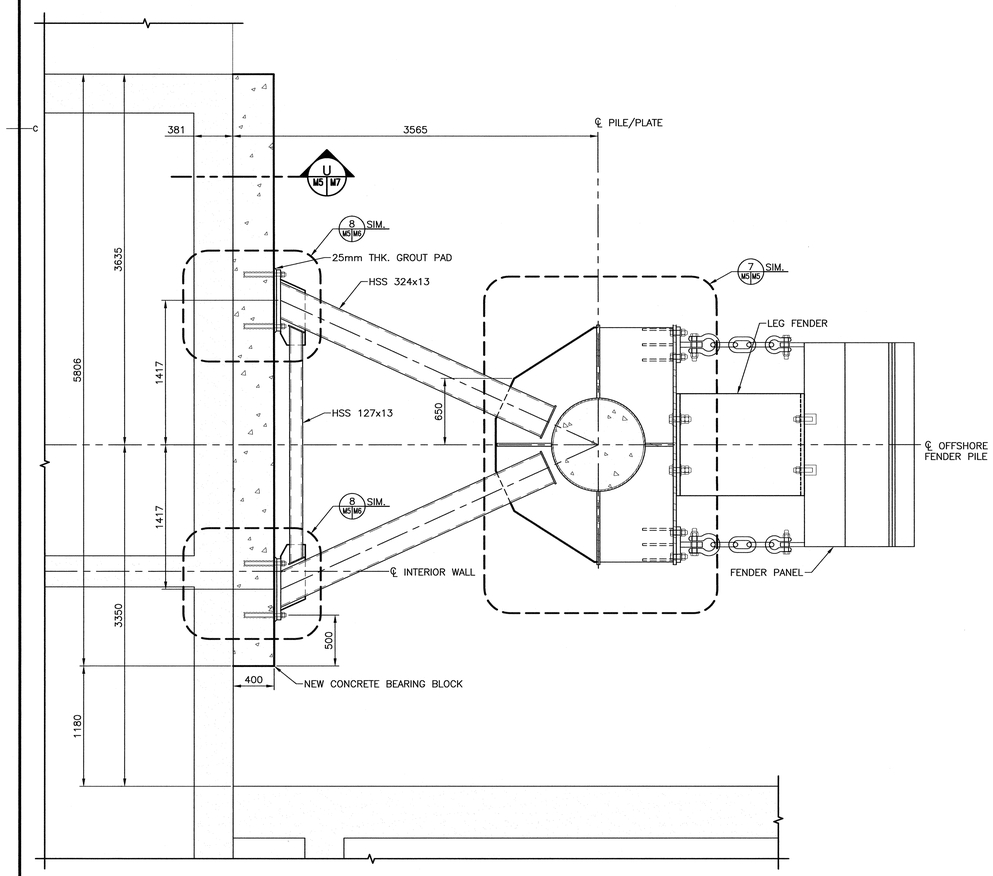

LOWER CONNECTION STRUT SECTION E M4 M5 △1

SCALE : 1:25

0mm 500mm 1000mm 1500mm 2000mm 2500mm

LOWER STRUT CAP PLATE SECTION G M5 M5

SCALE : 1:5

0mm 100mm 200mm 300mm 400mm 500mm

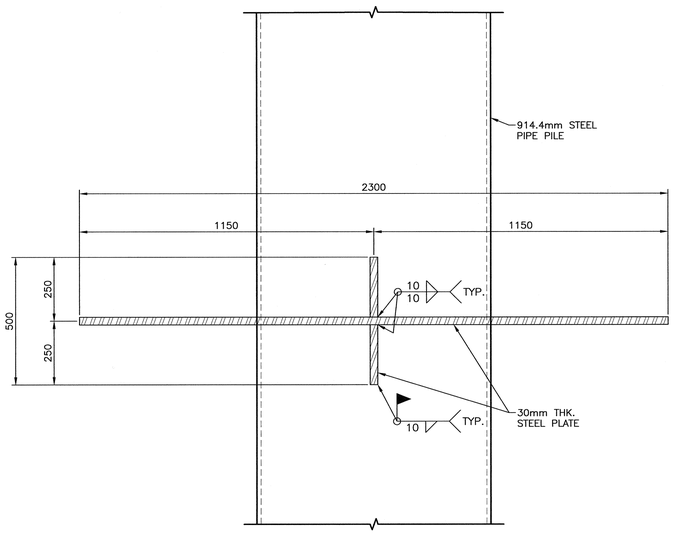

LOWER STRUT CONNECTION TO PILE SECTION F M5 M5

SCALE : 1:10

0mm 100 200 300 400 500 600 700 800 900 1000mm

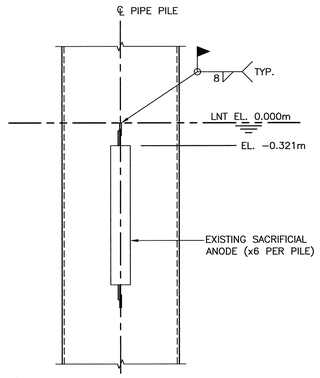

TYPICAL PIPE PILE ANODE CONNECTION 9 M4 M5

SCALE : 1:20

0mm 500mm 1000mm 1500mm 2000mm 2500mm

Public Works and Government Services Canada / Travaux Publics et Services gouvernementaux Canada

HARBOURSIDE Engineering Consultants

revisions		date
1	RE-ISSUED FOR TENDER	OCT 6 2017
0	ISSUED FOR TENDER	SEP 27 2017

project / projet

STERN FENDER REHABILITATION DIGBY FERRY TERMINAL, DIGBY COUNTY, N.S.

drawing / dessin

NEW CONSTRUCTION SECTIONS AND DETAILS

designed / conçu: S.O'BRIEN — date: AUGUST 2017

drawn / dessiné: S.GILLIS — date: AUGUST 2017

approved / approuvé: G.MacDONALD — date: SEPTEMBER 2017

Tender / Soumission: TERRY WALSH, PWGSC Project Manager, Administrateur de projets TPSGC — 2017-11-30

project number / no. du projet: R.080837.002

drawing no. / no. du dessin: M5 of 8