CONNECTION NOTES:

1. FOR THREAD TREATMENT OF ALL BOLTED CONNECTIONS, SEE SPECIFICATION SECTION 05 50 00 – PART 2.1.8.
2. ALL STRUTS TO BE WELDED TO ENSURE THEY ARE WATER TIGHT. (1)

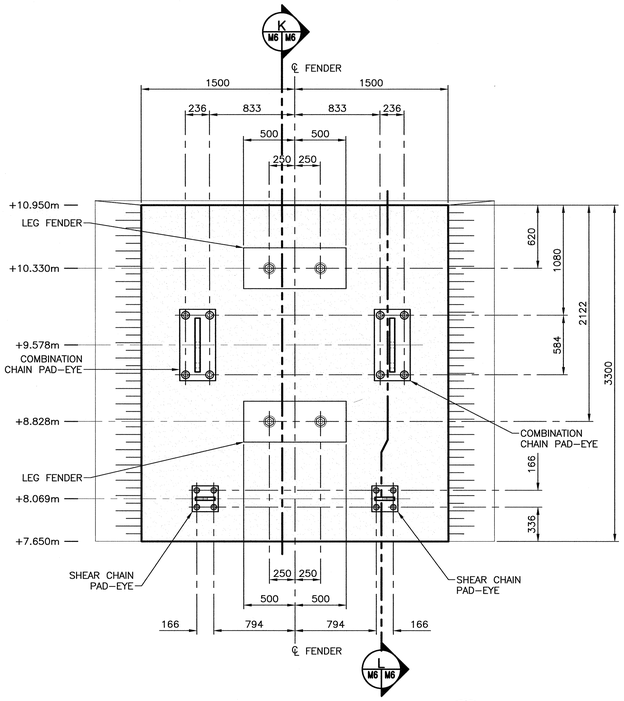

PILE CAP FACE SECTION (H M4 M6)
SCALE : 1:25
0mm 500mm 1000mm 1500mm 2000mm 2500mm

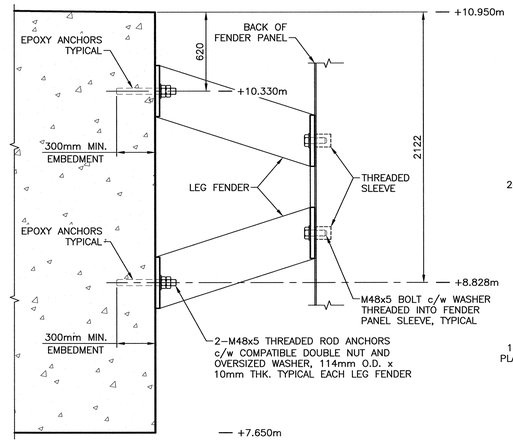

SECTION THROUGH LEG FENDERS (K M6 M6)
SCALE : 1:20
0mm 500mm 1000mm 1500mm 2000mm 2500mm

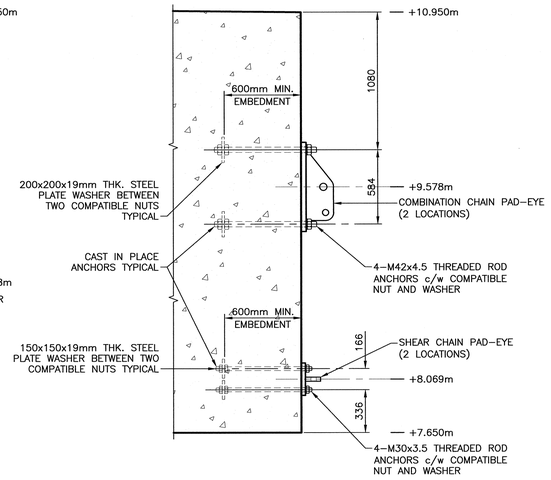

SECTION THROUGH CHAIN PAD–EYES (L M6 M6)
SCALE : 1:20
0mm 500mm 1000mm 1500mm 2000mm 2500mm

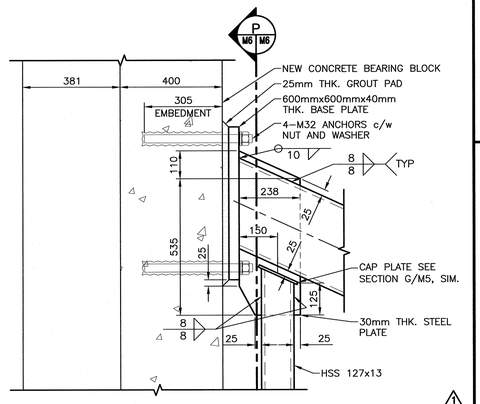

LOWER STRUT CONNECTION TO CAISSON DETAIL (8 M5 M6) (1)
SCALE : 1:10
0mm 100 200 300 400 500 600 700 800 900 1000mm

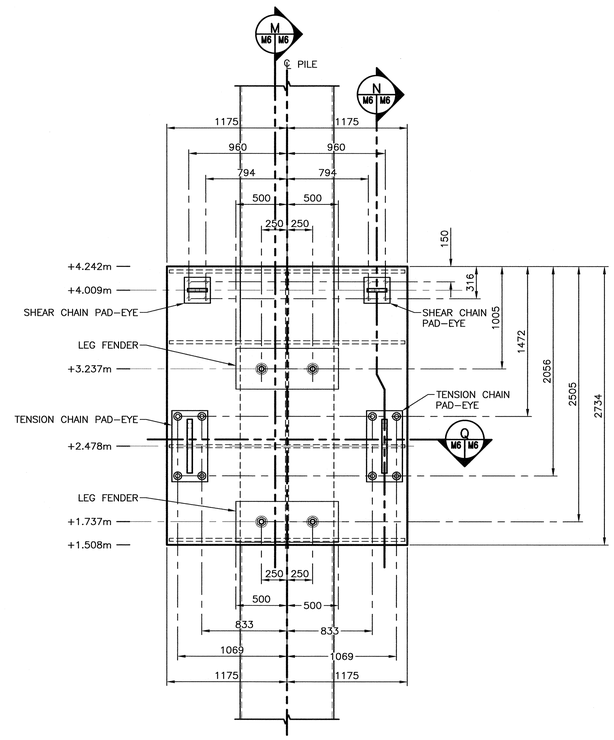

LOWER FENDER PILE CONNECTION SECTION (J M4 M6)
SCALE : 1:25
0mm 500mm 1000mm 1500mm 2000mm 2500mm

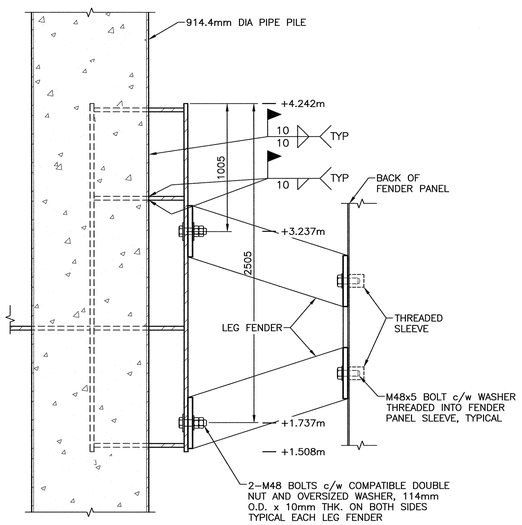

SECTION THROUGH LEG FENDERS (M M6 M6) (1)
SCALE : 1:20
0mm 500mm 1000mm 1500mm 2000mm 2500mm

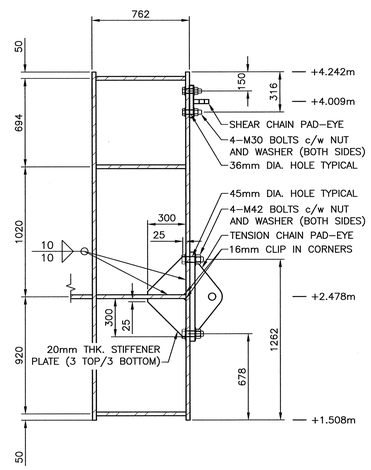

SECTION THROUGH CHAIN PAD–EYES (N M6 M6) (1)
SCALE : 1:20
0mm 500mm 1000mm 1500mm 2000mm 2500mm

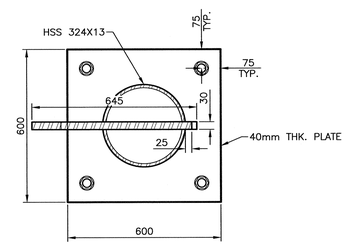

LOWER STRUT CONNECTION PLATE SECTION (P M6 M6) (1)
SCALE : 1:10
0mm 100 200 300 400 500 600 700 800 900 1000mm

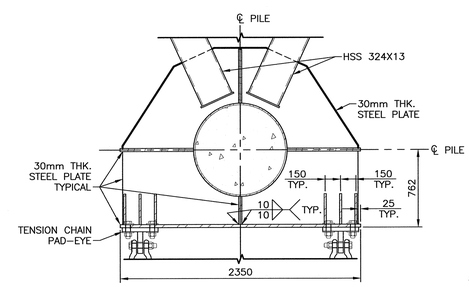

FENDER PANEL LOWER CONNECTION SECTION (Q M6 M6) (1)
SCALE : 1:25
0mm 500mm 1000mm 1500mm 2000mm 2500mm

Public Works and Government Services Canada / Travaux Publics et Services gouvernementaux Canada

HARBOURSIDE Engineering Consultants

revisions		date
1	RE–ISSUED FOR TENDER	OCT 6 2017
0	ISSUED FOR TENDER	SEP 27 2017

project / projet: STERN FENDER REHABILITATION DIGBY FERRY TERMINAL, DIGBY COUNTY, N.S.

drawing / dessin: FENDER PANEL CONNECTION SECTIONS

designed / conçu: S.O'BRIEN
date: AUGUST 2017
drawn / dessiné: S.GILLIS
date: AUGUST 2017
approved / approuvé: G.MacDONALD
date: SEPTEMBER 2017
Tender / Soumission: TERRY WALSH, PWGSC Project Manager / Administrateur de projets TPSGC
2017-11-30

project number / no. du projet: R.080837.002

drawing no. / no. du dessin: M6 of 8

PWGSC B1 (2004)

E–DRM/GDD–E: 552600 Version 1