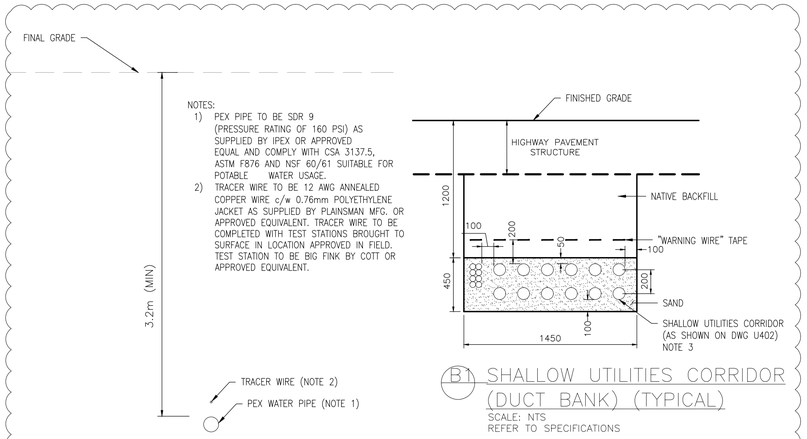

NOTES:
1) PEX PIPE TO BE SDR 9 (PRESSURE RATING OF 160 PSI) AS SUPPLIED BY IPEX OR APPROVED EQUAL AND COMPLY WITH CSA 3137.5, ASTM F876 AND NSF 60/61 SUITABLE FOR POTABLE WATER USAGE.
2) TRACER WIRE TO BE 12 AWG ANNEALED COPPER WIRE c/w 0.76mm POLYETHYLENE JACKET AS SUPPLIED BY PLAINSMAN MFG. OR APPROVED EQUIVALENT. TRACER WIRE TO BE COMPLETED WITH TEST STATIONS BROUGHT TO SURFACE IN LOCATION APPROVED IN FIELD. TEST STATION TO BE BIG FINK BY COTT OR APPROVED EQUIVALENT.

B1 SHALLOW UTILITIES CORRIDOR (DUCT BANK) (TYPICAL)
SCALE: NTS
REFER TO SPECIFICATIONS

A WATER SUPPLY LINE (TYPICAL)
SCALE: NTS
REFER TO SPECIFICATIONS

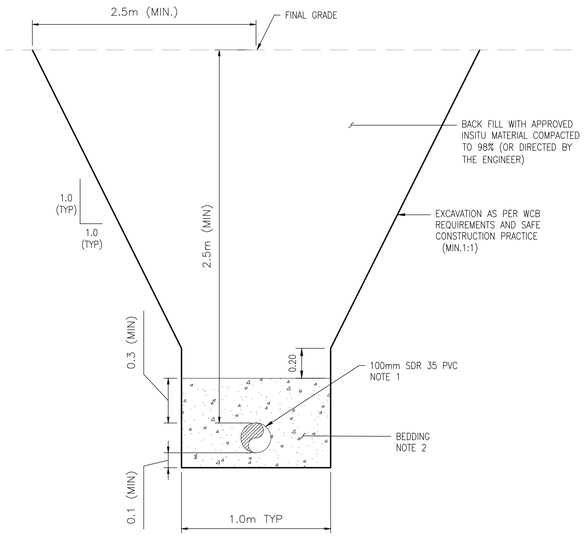

NOTES:
1) PVC GRAVITY PIPING TO BE SDR 35 AS SUPPLIED BY IPEX OR APPROVED EQUAL.
2) BEDDING TO BE CLASS II MATERIAL (20mm CLEAN TO COURSE GRAIN SOILS, FREE OF ORGANICS AND FROZEN MATERIAL.) CLASS II MATERIAL COMPACTED TO 95% SPD. IF INSTALLED UNDER A ROAD WAY, COMPACTED TO 98% SPD.
3) SHALLOW UTILITIES TO BE COMMON TRENCH, HOWEVER FOLLOWING SEPARATION REQUIREMENTS AS PER APPLICABLE CODES AND AS APPROVED BY THE DEPARTMENT REPRESENTATIVES. CONTRACTOR TO PROVIDE SHOP DRAWINGS FOR REVIEW AND APPROVAL PRIOR TO UNDERTAKING WORK.

B2 WASTE WATER (TYPICAL)
SCALE: NTS
REFER TO SPECIFICATIONS

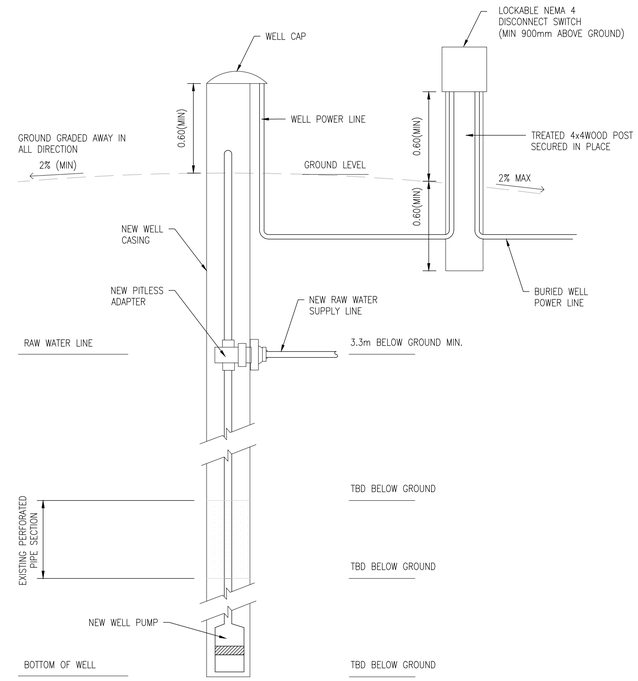

C WATER WELL (TYPICAL)
SCALE: NTS
REFER TO DWG U403, NOTE 2 & SPECIFICATIONS

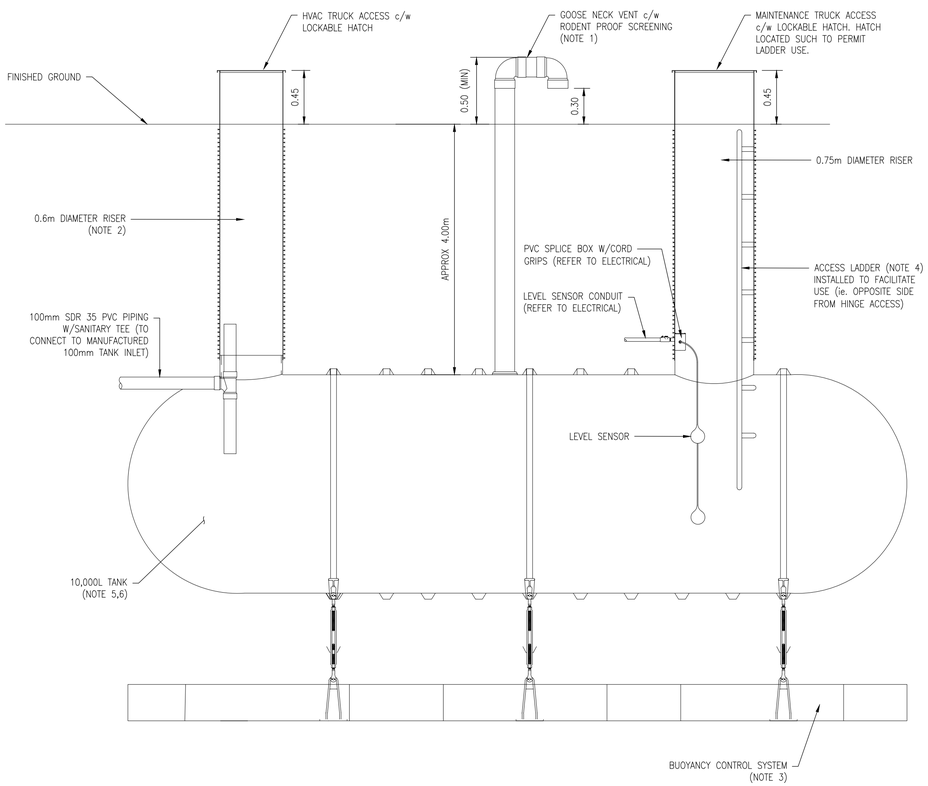

NOTES:
1) VENT AND SCREENING TO BE STAINLESS STEEL. VENT PIPE TO BE MINIMUM DIAMETER OF 100mm (4") NOMINAL PIPE SIZE, SCH 40.
2) IF FIBERGLASS RISERS USED, TO BE FLANGED TYPE MANWAY (AS SUPPLIED BY 2CL COMPOSITES, OR APPROVED EQUAL)
IF CONCRETE RISERS USED, TO BE STANDARD CONCRETE MANHOLES AS PER CITY OF EDMONTON DESIGHN AND CONSTRUCTION STANDARDS (VOLUME 3, DRAINAGE)
3) BUOYANCY CONTROL SYSTEM TO BE AS SUPPLIED BY TANK MANUFACTURE AND BUOYANCY CALCULATIONS INCLUDED WITH SHOP DRAWINGS c/w ENGINEERING STAMP
4) ACCESS LADDER TO BE TYPE 1A (EXTRA HEAVY DUTY, AMERICAN LADDER INSTITUTE) SUITABLE FOR 300lbs LOADS
5) VOLUME OF TANK MEASURED FROM THE INVERT OF THE INLET PIPE
6) TANK ACCESS AND VENTING PIPE TO BE PROTECTED WITH BOLLARDS OR SUITABLE RUNDLE STONES TO THE SATISFACTION OF THE DEPARTMENT REPRESENTATIVE.

D WASTEWATER TANK (TYPICAL)
SCALE: NTS
REFER TO SPECIFICATIONS

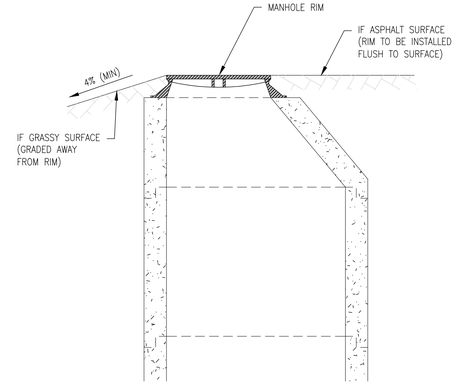

E MANHOLE GRADING (TYPICAL)
SCALE: NTS
REFER TO SPECIFICATIONS

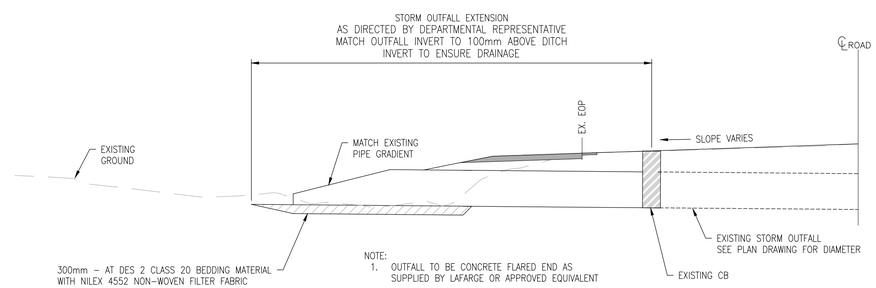

NOTE:
1. OUTFALL TO BE CONCRETE FLARED END AS SUPPLIED BY LAFARGE OR APPROVED EQUIVALENT

F OUTFALL DETAIL (TYPICAL)
SCALE: NTS
REFER TO SPECIFICATIONS

THIS DRAWING AND DESIGN SHALL NOT BE USED, REUSED, OR REPRODUCED WITHOUT THE CONSENT OF McELHANNEY CONSULTING SERVICES LTD. (McELHANNEY). McELHANNEY WILL NOT BE HELD RESPONSIBLE FOR THE IMPROPER OR UNAUTHORIZED USE OF THIS DRAWING AND DESIGN.

THIS DRAWING HAS BEEN PREPARED FOR THE CLIENT IDENTIFIED, TO MEET THE STANDARDS AND REQUIREMENTS OF THE APPLICABLE PUBLIC AGENCIES AT THE TIME OF PREPARATION. McELHANNEY, IT'S EMPLOYEES, SUBCONSULTANTS AND AGENTS WILL NOT BE LIABLE FOR ANY LOSSES OR OTHER CONSEQUENCES RESULTING FROM THE USE OR RELIANCE UPON, OR ANY CHANGES MADE TO THIS DRAWING, BY ANY THIRD PARTY INCLUDING CONTRACTORS, SUPPLIERS, CONSULTANTS, AND STAKEHOLDERS, OR THEIR EMPLOYEES OR AGENTS, WITHOUT McELHANNEY'S PRIOR WRITTEN CONSENT.

INFORMATION ON EXISTING UTILITIES MAY NOT BE COMPLETE OR ACCURATE. McELHANNEY, IT'S EMPLOYEES AND DIRECTORS ARE NOT RESPONSIBLE NOR LIABLE FOR THE LOCATION OF ANY UNDERGROUND CONDUITS, PIPES, CABLES, OR OTHER FACILITIES WHETHER SHOWN OR OMITTED FROM THIS DRAWING. PRIOR TO CONSTRUCTION, CONTRACTOR SHALL EXPOSE LOCATIONS OF ALL EXISTING FACILITIES BY HAND DIGGING OR HYDROVAC AND ADVISE THE ENGINEER OF POTENTIAL CONFLICTS.

Rev.	Date	Description	Drawn Dessiné	Designed Conçu	Approved Approuvé
1	2018.02.14	SHALLOW UTILITIES ALIGNMENT	AI	ADT	NJ
0	2017.12.08	ISSUED FOR TENDER	AI	ADT	SB

A detail number / numéro de detail
B source drawing no. / de dessin no.
C detail on drawing no. / detail sur dessin no.

Consultant's Stamp / Sceau de l'expert-conseil

Eng. Stamp / Sceau de l'ingénieur

Client

Parks Canada Agency / Western and Northern Region

L'Agence Parcs Canada / Ouest et Nord du Canada

Consultant's Name / Nom de l'expert-conseil

McElhanney
McElhanney Consulting Services Ltd.

Project Title / Titre du projet

HIGHWAY 16
PARK EAST GATE IMPROVEMENTS

JASPER NATIONAL PARK AB

Drawing Title / Titre du dessin

UTILITIES
TYPICAL DETAILS

Surveyed by / Arpenté par	Drawn by / Dessiné par	Date
MCSL	AI	2017.12.08
Designed by / Conçu par	**Reviewed by / Revisé par**	**Scale / Échelle**
ADT	SB	AS SHOWN

Parks Canada Project Manager / Administrateur de Projets Parcs Canada

Client Acceptance / Acceptation du client — Parks Canada Responsible Officer / Agent Responsable Parcs Canada

Approved by / Approuvé par — Parks Canada Project Manager / Administrateur de Projets Parcs Canada

Project No. / No. du projet	Asset No. / No. du-bien	Sheet No. / No. de la feuille
201605		U501

Drawing Reference No. / No. de réference du dessin: 2511-00763-00

FILE: G:\PROJECTS\2511 00763 00 PARKS HWY 16 GATE\10.0 DRAWINGS\10.3 SHEET FILES\00763-SAN LINE.DWG PLOTTED: 2018/02/14 4:08 PM

Paper Size: ANSI D (22 x 34")

0 10 20 30 40 50 60 70 80 90 100mm