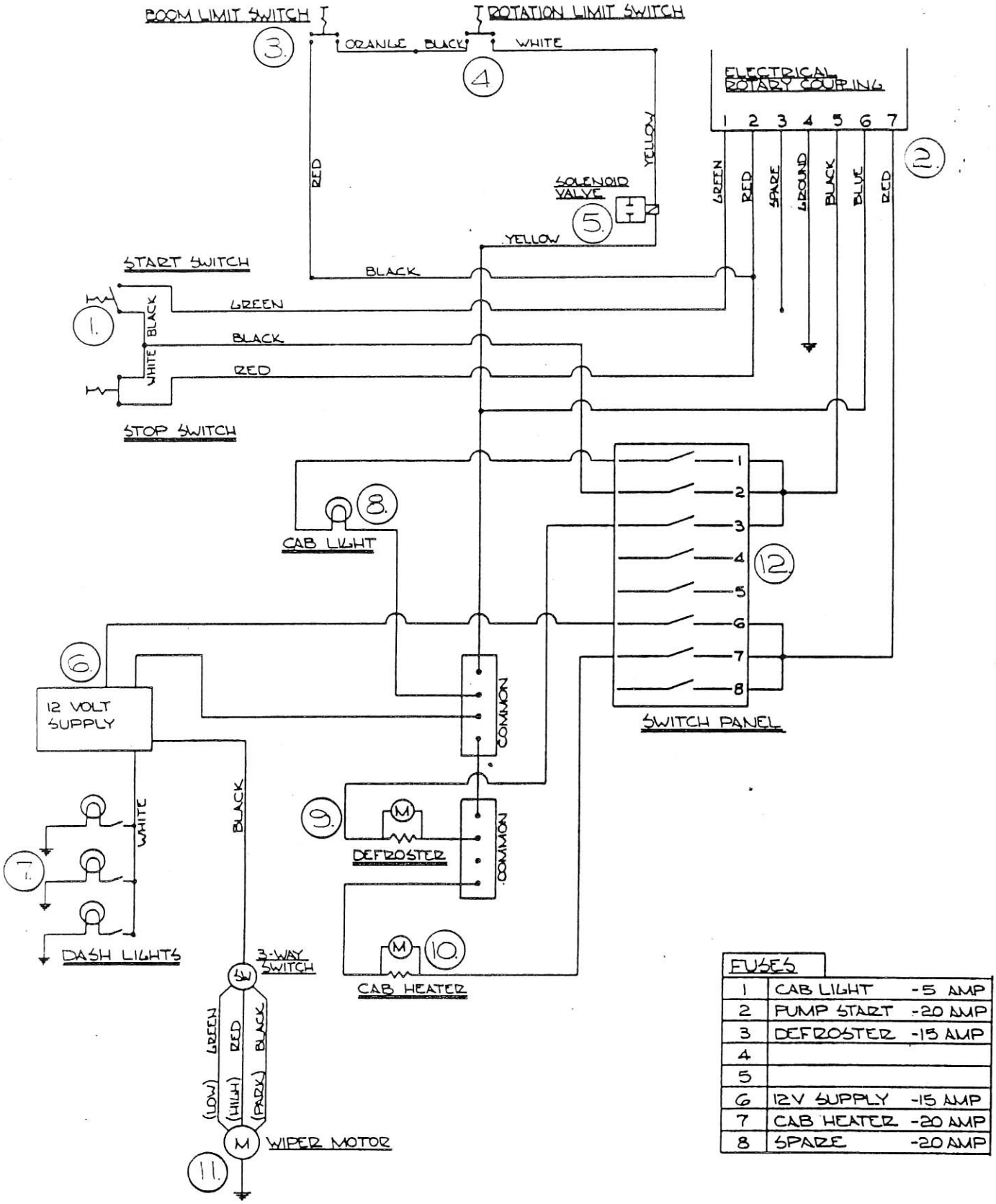

FUSES		
1	CAB LIGHT	-5 AMP
2	PUMP START	-20 AMP
3	DEFROSTER	-15 AMP
4		
5		
6	12V SUPPLY	-15 AMP
7	CAB HEATER	-20 AMP
8	SPARE	-20 AMP

NOTE:
SEE PARTS LIST (FOLLOWING PAGE) FOR COMPONENTS AND SPECIFICATIONS.

JACOBS BROTHERS MACHINE WORKS LTD.
7983 PROGRESS WAY DELTA, B.C. V4G 1A3

TOLERANCES (EXCEPT AS NOTED)	SCALE ~	DRAWN BY DELCOURT	APPROVED BY
DECIMAL ±	DATE DEC/86		
FRACTIONAL ±	EQUIP. CARGO STORAGE CRANE RE 1200 ICEBREAKER		JOB No. 1140
ANGULAR ±	TITLE ELECTRICAL SCHEMATIC		DWG. No. B10451 SHT. OF SHTS.

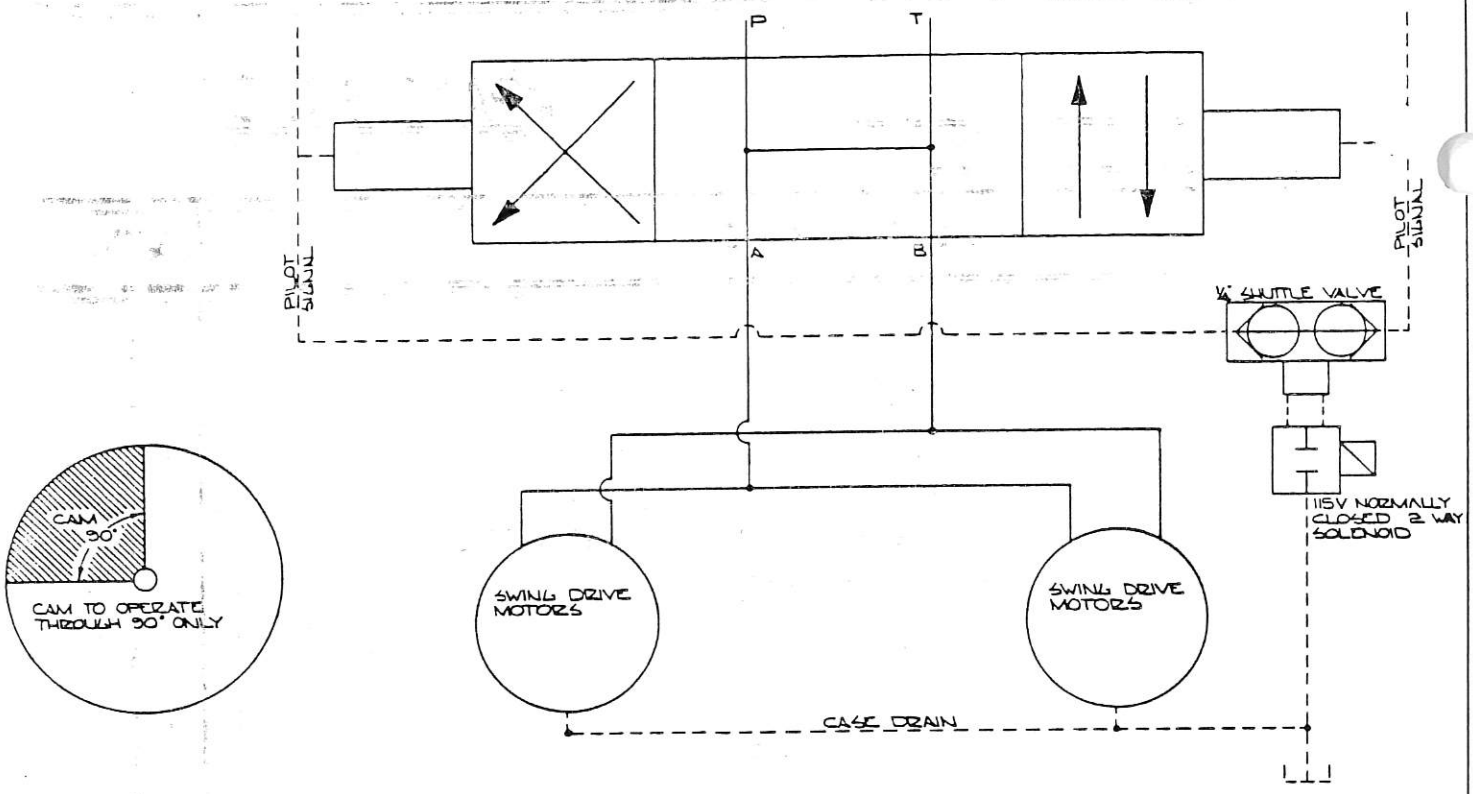

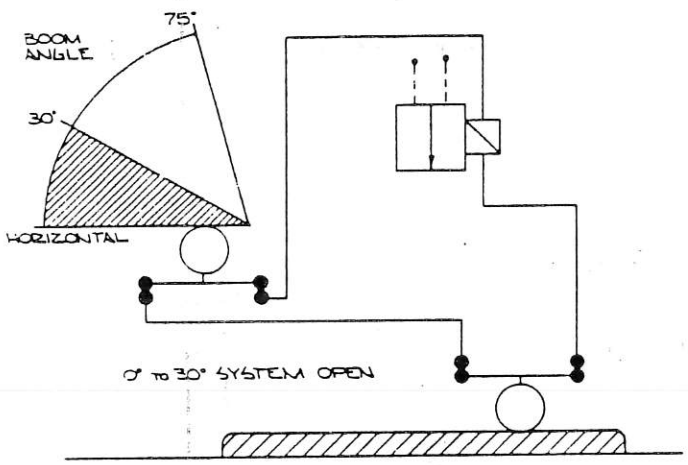

ON CAM

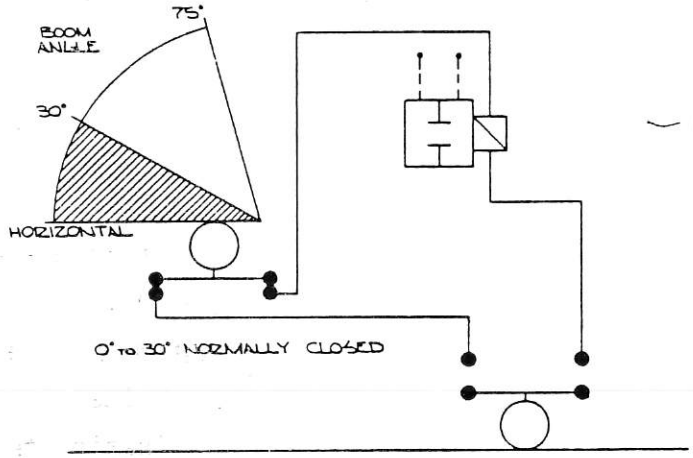

OFF CAM

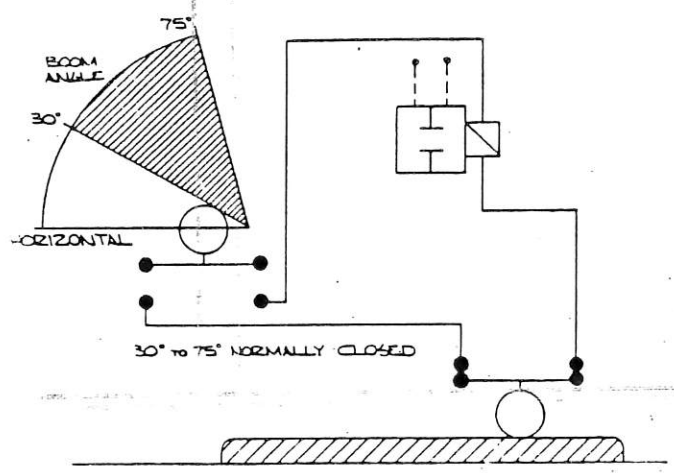

ON CAM

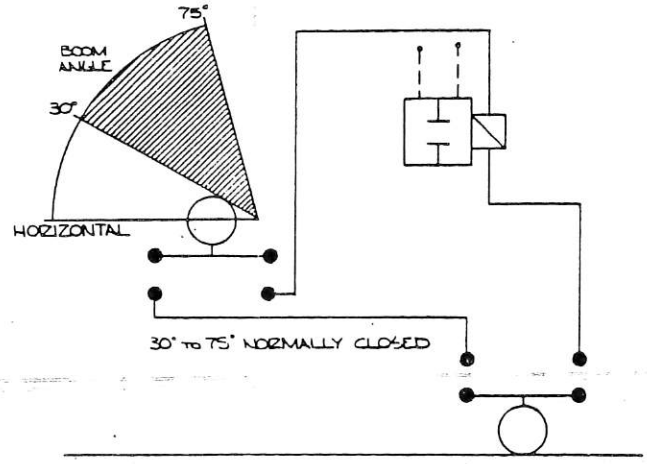

OFF CAM

EQUIPMENT DECK CRANE

SERIAL NO. 1140

PARTS LIST

ITEM NO.	PART NO.	DESCRIPTION	QTY.
1	800T-FC16A	Start Stop Switch	1
2	RU38-DBA	Electrical Rotary Coupling	1
3	802M-AY5	Limit Switch (Boom)	1
4	802M-AY5	Limit Switch (Rotation)	1
5	SV10C	Solenoid Valve (Normally Closed)	1
6	P95030	12 Volt Supply	1
7	M451	Dash Light	3
8	VPF 150	Cab Light	1
9	CKH 20-B	Defrost Heater	1
10	WHC 1512	Cab Heater	1
11	WC19624	Wiper Motor	1
12	573086	Switch Panel (Double Breaker Pole)	1

SUPPLIERS:

Allen Bradley-Items 1,3,4, & 7
Boche-Item 11
Chromalox-Item 9 & 10
Lyco-Item 6
Marinetic-Item 12
Modular Controls-Item 5
Scepter-Item 8
Tor Mag-Item 2

100 HP

LEROY SOMER
...THE BETTER ALTERNATIVE

Powerbloc® TEFC

- Totally enclosed fan cooled
- Class B insulation 40°C ambient
- 230/460V 60Hz 1.15 service factor
- 190/380V 50Hz 1.0 service factor

NEMA FRAME	SYNCH SPEED	FULL LOAD SPEED	VOLTAGE* and FREQUENCY	AMPERES FULL LOAD (FLC)	AMPERES LOCKED ROTOR % of FLC	TORQUE (LB-FT) FULL LOAD (FLT)	TORQUE (LB-FT) BREAK DOWN % of FLT	TORQUE (LB-FT) LOCKED ROTOR % of FLT	% EFFICIENCY 1/2	% EFFICIENCY 3/4	% EFFICIENCY 4/4	POWER FACTOR 1/2	POWER FACTOR 3/4	POWER FACTOR 4/4	NEMA CODE
405TS	3600	3550	208 @ 60Hz	249	630	146	220	225	88	89	91	.83	.86	.88	G
			460 @ 60Hz	112	700		245	250	89	91	91	.84	.90	.91	
	3000	2950	380 @ 50Hz	142	504	178	183	185	89	91	92	.83	.86	.88	E
405T	1800	1770	208 @ 60Hz	250	605	293	207	235	88	90	91	.76	.82	.86	H
			460 @ 60Hz	113	670		230	260	90	90	91	.77	.84	.89	
	1500	1470	380 @ 50Hz	145	475	357	170	195	91	92	93	.75	.82	.86	E
444T	1200	1180	208 @ 60Hz	276	612	439	270	200	90	91	91	.76	.86	.87	H
			460 @ 60Hz	125	680		300	220	89	90	92	.75	.81	.83	
	1000	980	380 @ 50Hz	140	550	535	220	165	90	92	92	.79	.86	.87	F
505	900	885	208 @ 60Hz	273	550	586	200	125	89	91	92	.73	.78	.80	F
			460 @ 60Hz	123	550		220	140	91	92	93	.74	.78	.81	
	750	735	380 @ 50Hz	148	513	714	200	140	93	93	93	.74	.79	.81	F

OPEN DRIP PROOF

- Class F insulation 40°C ambient
- Continuous duty
- 230/460V 60Hz
  1.15 service factor
- 190/380V 50Hz
  1.0 service factor

NEMA FRAME	SYNCH SPEED	FULL LOAD SPEED	VOLTAGE* and FREQUENCY	AMPERES FULL LOAD (FLC)	AMPERES LOCKED ROTOR % of FLC	TORQUE (LB-FT) FULL LOAD (FLT)	TORQUE (LB-FT) BREAK DOWN % of FLT	TORQUE (LB-FT) LOCKED ROTOR % of FLT	% EFFICIENCY 1/2	% EFFICIENCY 3/4	% EFFICIENCY 4/4	POWER FACTOR 1/2	POWER FACTOR 3/4	POWER FACTOR 4/4	NEMA CODE
365TS	3600	3525	208 @ 60Hz	245	648	149	207	160	89	90	91	.87	.88	.91	H
			460 @ 60Hz	110	720		230	180	89	90	90	.88	.90	.92	
	3000	2925	380 @ 50Hz	121	600	180	175	135	90	91	91	.89	.91	.93	E
404T	1800	1765	208 @ 60Hz	264	515	293	212	190	89	90	90	.78	.82	.85	G
			460 @ 60Hz	120	606		250	225	91	92	92	.77	.83	.84	
	1500	1465	380 @ 50Hz	138	480	358	190	170	91	91	92	.77	.82	.84	D
444T	1200	1180	208 @ 60Hz	270	530	445	225	170	89	90	91	.75	.77	.79	G
			460 @ 60Hz	121	590		250	190	90	91	92	.76	.79	.81	
	1000	980	380 @ 50Hz	133	487	536	188	145	91	92	92	.76	.78	.80	H
445T	900	885	208 @ 60Hz	292	505	594	190	120	91	92	92	.72	.75	.77	G
			460 @ 60Hz	128	560		210	135	92	93	93	.73	.77	.79	
	750	735	380 @ 50Hz	141	460	715	160	110	90	92	92	.72	.75	.78	F

ECO+ Premium Efficiency Severe Duty

- Premium Efficiency with Cast Iron Construction
- TEFC
- 230/460V, 60 Hz
  1.15 Service Factor
  Continuous Duty

NEMA FRAME	SYNCH SPEED	FULL LOAD SPEED	VOLTAGE* and FREQUENCY	AMPERES FULL LOAD (FLC)	AMPERES LOCKED ROTOR % of FLC	TORQUE (LB-FT) FULL LOAD (FLT)	TORQUE (LB-FT) BREAK DOWN % of FLT	TORQUE (LB-FT) LOCKED ROTOR % of FLT	% EFFICIENCY 1/2	% EFFICIENCY 3/4	% EFFICIENCY 4/4	POWER FACTOR 1/2	POWER FACTOR 3/4	POWER FACTOR 4/4	NEMA CODE
405TS	3600	3550	460 @ 60Hz	113.9	629	147.3	200	170	90.2	93.6	94.5† 94.5	84	86	87	G
405T	1800	1780	460 @ 60Hz	114.6	631	294.9	200	230	92	94	95† 94.5	83	85	86	G
444T	1200	1175	460 @ 60Hz	119.9	592	446.8	200	160	91	94	94.1† 95	.75	80	83	G

NOTES.
* For amperes value at 230V, double 460V value.
† Efficiency values shown are NEMA nominal and tested.

Data is subject to change without notice.

In U.S.A.: **LEROY-SOMER, INC.** • 560 S. Hicks Road • Palatine, Illinois 60067 • Phone: 312/359-2440 TLX 210231

LEROY SOMER
...THE BETTER ALTERNATIVE

Open Drip-Proof Motor
Frames: 56 to 507
Mounting: Foot

SPECIFICATIONS:

- ODP
- Housing:
  Rolled Steel - Frames 56 to 215T & 447T to 507
  Alpax - Frames 254T to 445T
- Cast Iron Endbells: Frames 143T to 507

TERMINAL BOX POSITIONS:

- F-1 Assembly, Standard (Solid line)
- F-0 Assembly, Upon Request

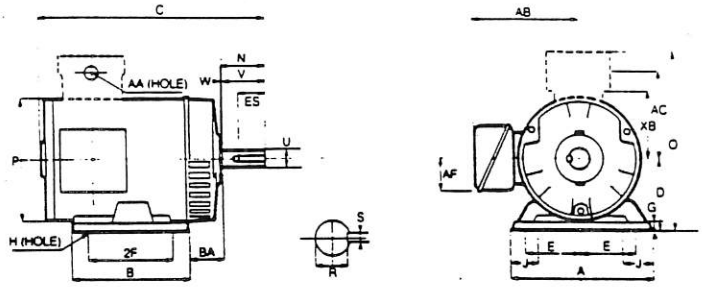

ALL DIMENSIONS IN INCHES

FRAME	STANDARD SHAFT				KEYWAY			SHORT SHAFT				KEYWAY		
	U	V	N	W	R	S	ES	U	V	N	W	R	S	ES
56	5/8	1 7/8	2 3/16	5/16	33/64	3/16	1 3/8	—	—	—	—	—	—	—
143T-145T	7/8	2 1/4	2 3/8	1/8	49/64	3/16	1 3/8	—	—	—	—	—	—	—
182T-184T	1 1/8	2 3/4	2 7/8	1/8	31/32	1/4	1 3/4	—	—	—	—	—	—	—
213T-215T	1 3/8	3 3/8	3 1/2	1/8	1 3/16	5/16	2 3/8	—	—	—	—	—	—	—
254T-256T	1 5/8	4	4 1/4	1/4	1 13/32	3/8	2 7/8	—	—	—	—	—	—	—
284T-286T	1 7/8	4 5/8	4 7/8	1/4	1 37/64	1/2	3 1/4	1 5/8	3 1/4	3 1/2	1/4	1 13/32	3/8	1 7/8
324T-326T	2 1/8	5 1/4	5 1/2	1/4	1 27/32	1/2	3 7/8	1 7/8	3 3/4	4	1/4	1 37/64	1/2	2
364T-365T	2 3/8	5 7/8	6 1/8	1/4	2 1/64	5/8	4 1/4	1 7/8	3 3/4	4	1/4	1 37/64	1/2	2
404T-405T	2 7/8	7 1/4	7 3/8	1/8	2 7/16	[illegible]	[illegible]	2 1/8	4 1/4	4 3/8	1/8	1 27/32	1/2	2 3/4
444T-447T	3 3/8	8 1/2	8 5/8	1/8	2 55/64	7/8	6 7/8	2 3/8	4 3/4	4 7/8	1/8	2 1/64	5/8	3
505-507	3 3/8	9 1/4	9 3/8	1/8	2 7/8	7/8	7 1/4	—	—	—	—	—	—	—

FRAME	TYPE	A	B	C (MAX)	D	E	2F	G	H	J*	O	P	BA	AA	AB	AC	AF
56	—	6 1/2	4	10 7/8	3 1/2	2 7/16	3	7/64	11/32	N/A	6 7/16	5 7/8	2 3/4	7/8	5	4	1 11/16
143T	—	6 1/2	6 1/2	11 11/16	3 1/2	2 3/4	4	7/64	5/16	N/A	6 7/8	6 3/4	2 1/4	1 1/8	5 1/2	4 1/2	1 11/16
145T	—	6 1/2	6 1/2	11 11/16	3 1/2	2 3/4	5	7/64	5/16	N/A	6 7/8	6 3/4	2 1/4	1 1/8	5 1/2	4 1/2	1 11/16
182T	3 HP 4P 3 HP 2P	8 29/32	6 45/64	14	4 1/2	3 3/4	4 1/2	3/16	13/32	N/A	8 3/8	7 3/4	2 3/4	1 1/8	5 1/2	4 1/2	1 11/16
182T	5 HP 2P	9	6 29/32	15 3/4	4 1/2	3 3/4	4 1/2	1/8	13/32	N/A	8 7/8	8 3/4	2 3/4	1 1/8	6	5	1 11/16
184T	—	9	6 29/32	15 3/4	4 1/2	3 3/4	5 1/2	1/8	13/32	N/A	8 7/8	8 3/4	2 3/4	1 1/8	6	5	1 11/16
213T	—	10	8 13/64	17 7/8	5 1/4	4 1/4	5 1/2	3/16	13/32	N/A	9 5/8	8 3/4	3 1/2	1 1/8	6 3/4	5 3/8	2 3/16
215T	—	10	8 13/64	18	5 1/4	4 1/4	7	3/16	13/32	N/A	10 7/16	10 3/8	3 1/2	1 3/8	7 7/8	6	2 3/16
254T	—	11 3/16	9 5/8	22 5/16	6 1/4	5	8 1/4	11/16	17/32	1 1/2	12 1/2	9 5/8	4 1/4	1 3/8	8 1/4	7	2 3/4
256T	—	11 9/16	11 3/4	23 5/8	6 1/4	5	10	1	17/32	1 3/4	13	13	4 1/4	1 1/4	9 1/4	7 1/2	2 3/4
284T	2, 4 Pole 6, 8 Pole	12 3/4	12 1/2	24 1/4 25 3/16	7	5 1/2	9 1/2	1 3/8	17/32	2 11/16	13 3/4	13	4 3/4	1 1/2	9 1/4	7 1/2	2 3/4
286T	—	12 3/4	12 1/2	24 1/4	7	5 1/2	11	1 3/8	17/32	2 11/16	13 3/4	13	4 3/4	1 1/2	9 1/4	7 1/2	2 3/4
324T	—	14 7/8	13 1/2	28 1/8	8	6 1/4	10 1/2	1 3/8	11/16	2 7/8	15 1/2	14 1/2	5 1/4	1 1/2	11 5/8	9	4
326T	2, 6 Pole 4 Pole 8 Pole	14 7/8	13 1/2	28 1/8 30 1/16 31	8	6 1/4	12	1 1/16	11/16	2 7/8	15 1/2 15 1/2 17	14 1/2 14 1/2 16 3/4	5 1/4	2	11 5/8 11 5/8 12 1/2	9	4
364T	2, 4 Pole 6, 8 Pole	16 3/8	13 3/4	31 5/8 33 1/8	9	7	11 1/4	1 1/4	11/16	2 7/8	18	16 3/4	5 7/8	2	12 1/2	9	4
365T	2, 4 Pole 6, 8 Pole	16 3/8	13 3/4	31 5/8 33 1/8	9	7	12 1/4	1 1/4	11/16	2 7/8	18	16 3/4	5 7/8	2	12 1/2	9	4
404T	2, 4, 6 Pole 8 Pole	[illegible] 18 7/8	[illegible] 16 3/8	[illegible] 38 7/16	10	8	12 1/4	[illegible] 1 1/2	1 1/16	3 1/2 3 3/4	[illegible] 20 3/8	[illegible] 20	6 5/8	2 1/2	[illegible] 17 1/2	[illegible]	7
405T	2, 4, 6 Pole 8 Pole	18 3/8 18 7/8	15 1/2 16 3/8	37 7/8 38 7/16	10	8	13 3/4	1 3/4 1 1/2	13/16	3 1/2 3 3/4	19 5/8 20 3/8	18 1/4 20	6 5/8	2 1/2	16 1/2 17 1/2	15 1/2	7
444T	—	20 1/2	18 7/8	41 11/16	11	9	14 1/2	1 1/2	13/16	3 3/4	21 3/8	20	7 1/2	2 1/2	17 1/2	15 1/2	7
445T	—	21 1/4	19 3/4	44 1/2	11	9	16 1/2	1 1/16	13/16	3 3/4	21 3/8	22	7 1/2	2 1/2	17 3/4	15 3/4	7
447T	—	21	23 1/4	48 7/8	11	9	20	1 1/16	13/16	3 3/4	22 13/16	22	7 1/2	2 1/2	17 3/4	15 3/4	7
505	—	24	21 1/4	49 1/16	12 1/2	10	18	1	1 1/16	4	25 1/2	25	8 1/2	3	22	18	7 3/8
507	—	24	25 1/4	54 9/16	12 1/2	10	22	1	1 1/16	4	25 1/2	25	8 1/2	3	22	18	7 3/8

SUBJECT TO CHANGE WITHOUT NOTICE
* Feet are Stamped Steel - 56 to 215T
For Motor Dimension Tolerances, see Engineering Section page D-20.

In U.S.A.: **LEROY-SOMER, INC.** • 560 S. Hicks Road • Palatine, Illinois 60067 • Phone: 312/359-2440 TLX 210231