161-11133-00

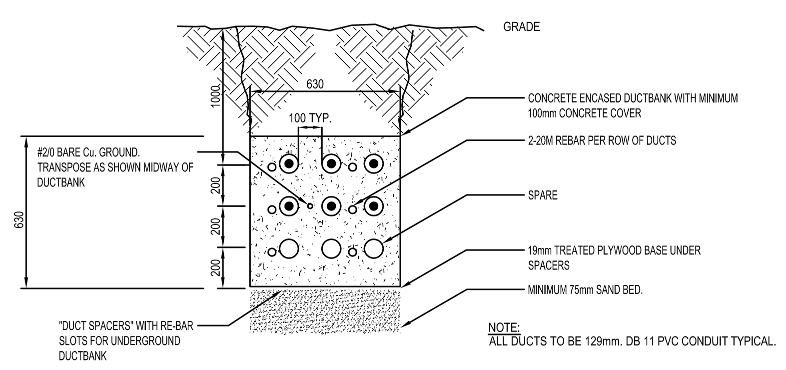

1 E3-02-01 TYPICAL CONSTRUCTION (DUCTBANK DETAIL)
SCALE: N.T.S.

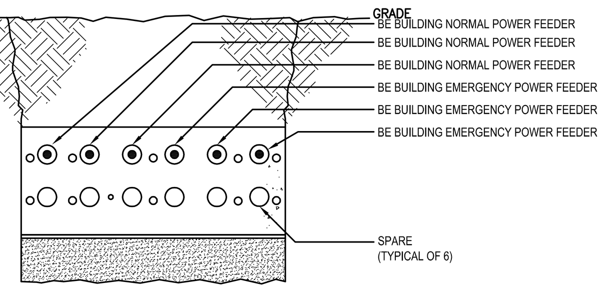

2 E3-02-01 B.E. E-HOUSE FEEDERS (DUCTBANK DETAIL)
SCALE: N.T.S.

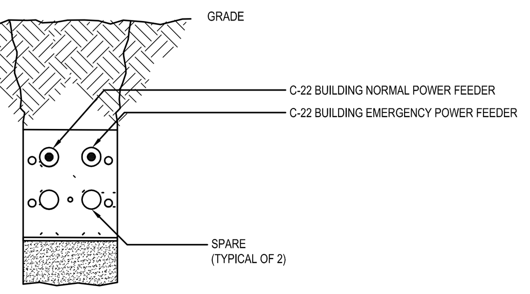

3 E3-02-01 C-22 FEEDERS (DUCTBANK DETAIL)
SCALE: N.T.S.

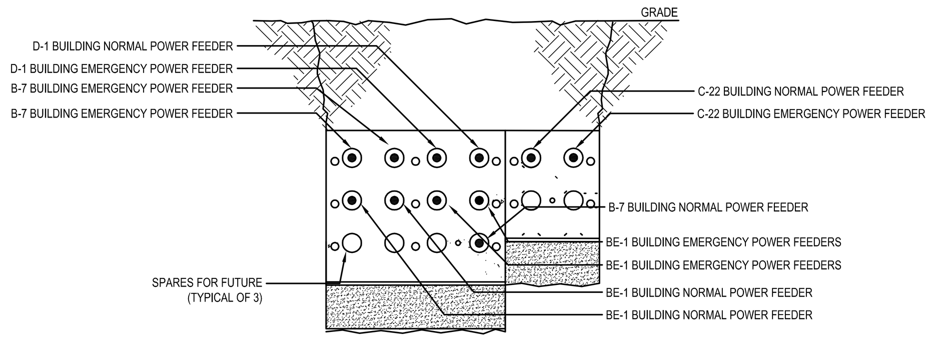

4 E3-02-01 C-22,BE-1, B-7 & D-1 FEEDERS (DUCTBANK DETAIL)
SCALE: N.T.S.

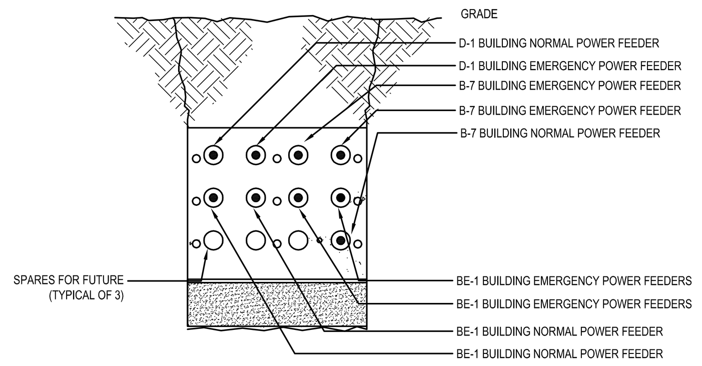

5 E3-02-01 BE-1, B-7 & D-1 FEEDERS (DUCTBANK DETAIL)
SCALE: N.T.S.

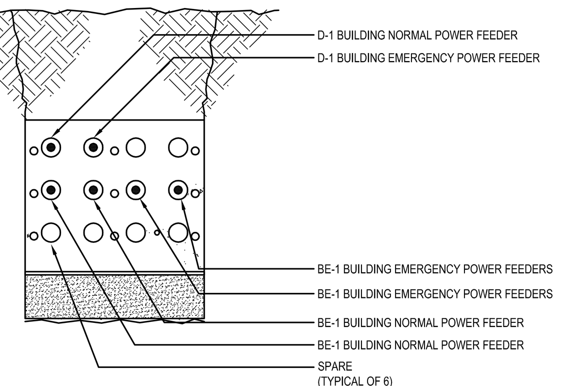

6 E3-02-01 D-1 & BE-1 FEEDERS (DUCTBANK DETAIL)
SCALE: N.T.S.

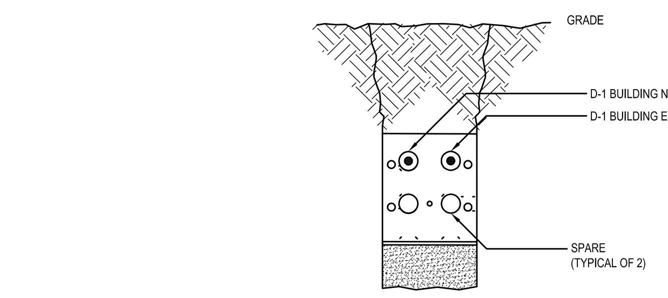

7 E3-02-01 D-1 FEEDERS (DUCTBANK DETAIL)
SCALE: N.T.S.

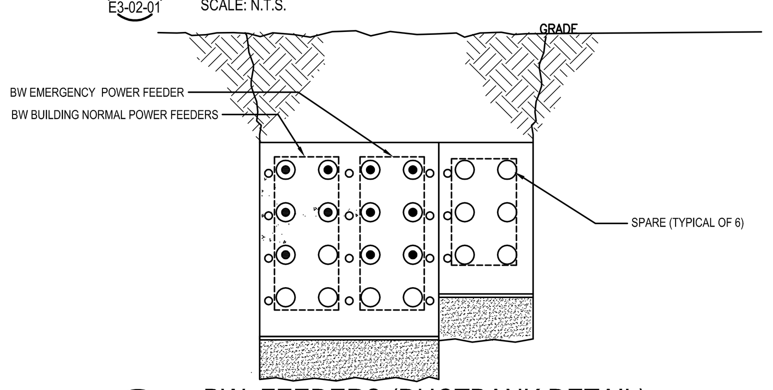

16 E3-02-01 BW FEEDERS (DUCTBANK DETAIL)
SCALE: N.T.S.

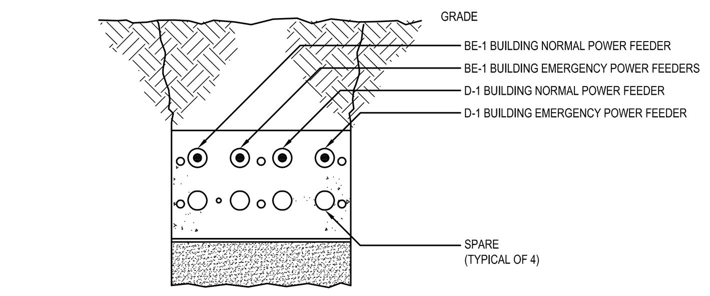

8 E3-02-01 BE-1 FEEDERS (DUCTBANK DETAIL)
SCALE: N.T.S.

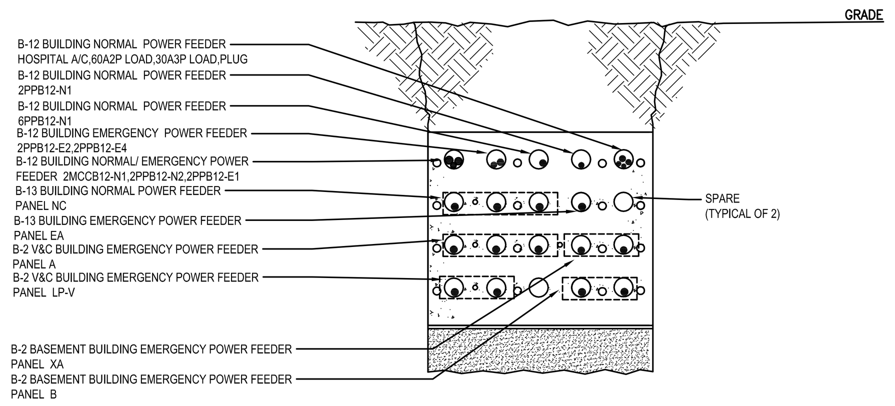

9 E3-02-01 B-12, B-2, & B-13 FEEDERS (DUCTBANK DETAIL)
SCALE: N.T.S.

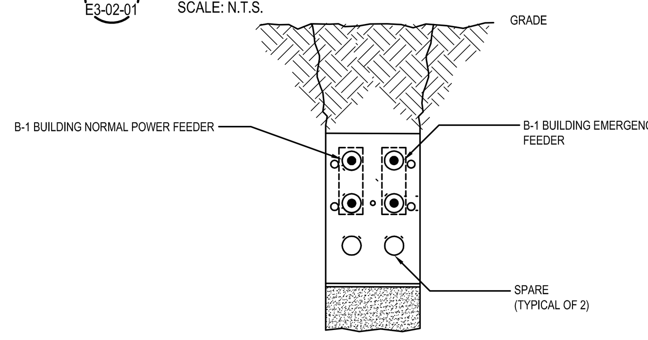

10 E3-02-01 B-1 FEEDERS (DUCTBANK DETAIL)
SCALE: N.T.S.

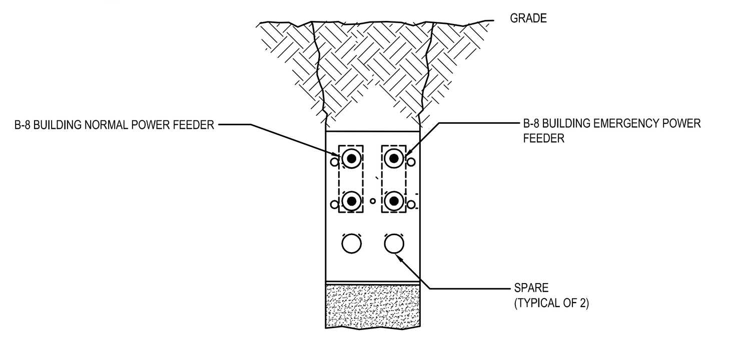

11 E3-02-01 B-8 FEEDER (DUCTBANK DETAIL)
SCALE: N.T.S.

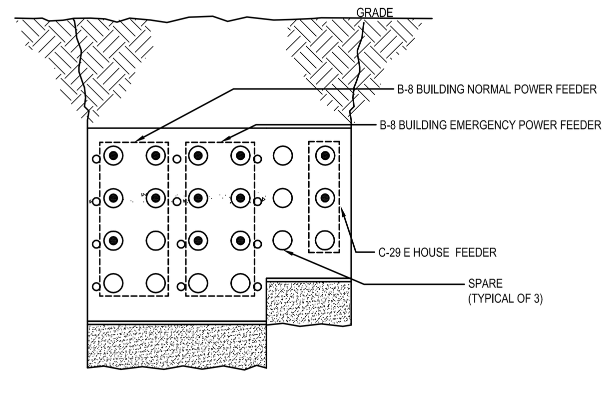

12 E3-02-01 B-W FEEDERS (DUCTBANK DETAIL)
SCALE: N.T.S.

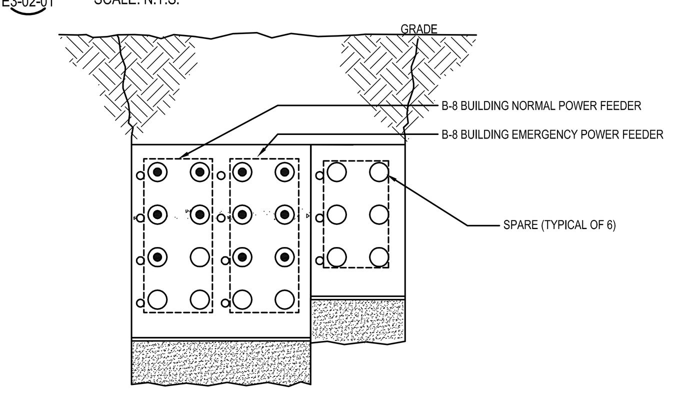

13 E3-02-01 BW BREAK AWAY FEEDERS (DUCTBANK DETAIL)
SCALE: N.T.S.

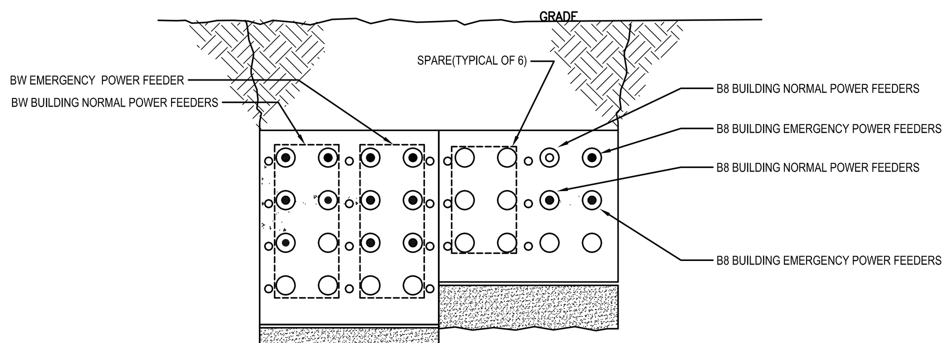

14 E3-02-01 BW & B8 FEEDERS (DUCTBANK DETAIL)
SCALE: N.T.S.

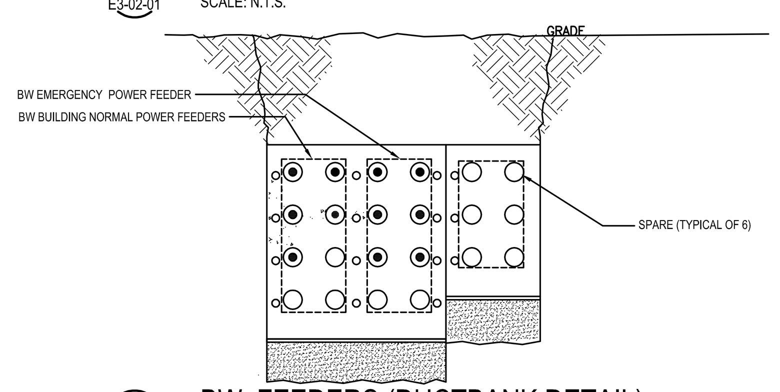

15 E3-02-01 BW FEEDERS (DUCTBANK DETAIL)
SCALE: N.T.S.

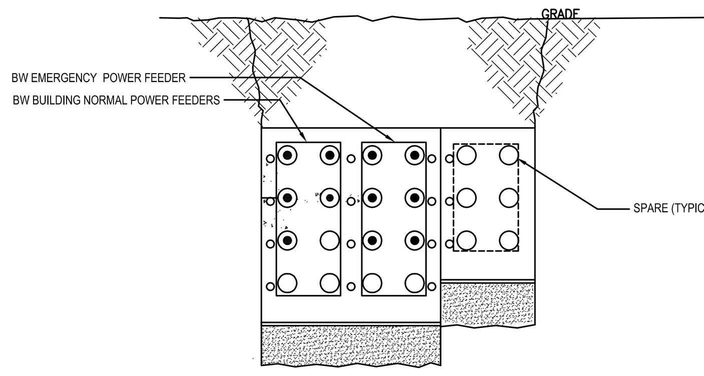

17 E3-02-01 BW FEEDERS (DUCTBANK DETAIL)
SCALE: N.T.S.

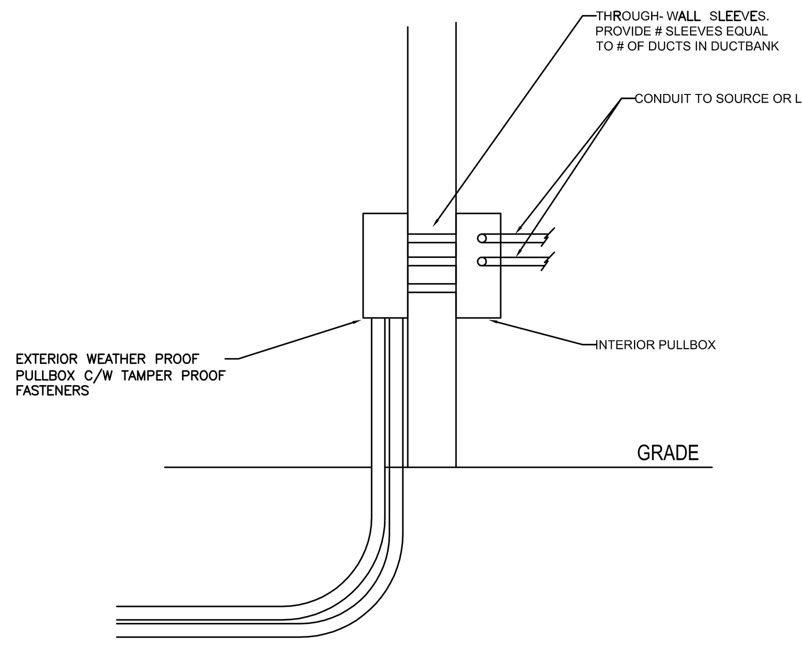

18 E3-02-01 DUCT ENTRY DETAIL
SCALE: N.T.S.

HOUSEKEEPING PADS / BUILT UP SLABS	TC-MISC-01

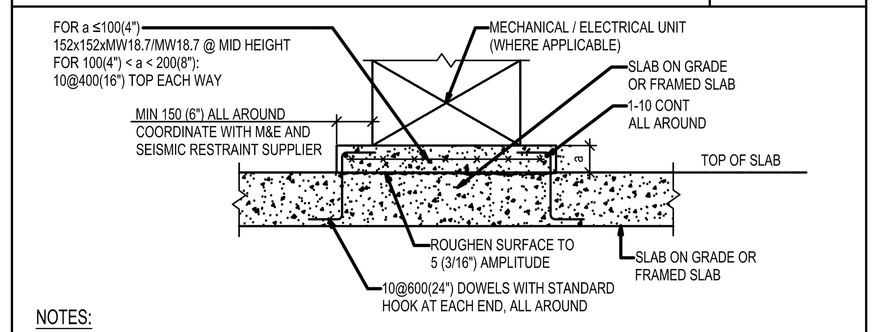

NOTES:
1. FOR PAD SIZES AND LOCATIONS, SEE MECHANICAL, ELECTRICAL AND ARCHITECTURAL DRAWINGS.
2. FOR PADS MORE THAN 200(8") THICK OBTAIN CONSULTANT'S APPROVAL PRIOR TO POURING.
3. FOR BUILT UP SLABS LESS THAN 25(1") THICK
4. AT SLABS MINIMUM 125 (5") THICK DOWELS CAN BE POST INSTALLED AND EMBEDDED 100 (4") DEEP USING HILTI ADHESIVE SYSTEM.
5. REINFORCING SHOWN IS THE MINIMUM REQUIREMENT; COORDINATE WITH SEISMIC RESTRAINT DESIGN AND INCREASE IF REQUIRED.
6. UNLESS THE PAD ITSELF IS SUFFICIENT TO RESIST ALL THE LOAD IMPOSED TO IT BY SEISMIC RESTRAINT ELEMENTS WITHOUT RELYING ON BASE SLAB, EXTEND ALL THE ANCHORAGE INTO THE BASE SLAB AND NEGLECT THE PORTION OF THE ANCHORS WITHIN THE PAD.

AUGUST 2017

19 E3-02-01 HOUSEKEEPING PAD DETAIL (TYPICAL)
SCALE: N.T.S.

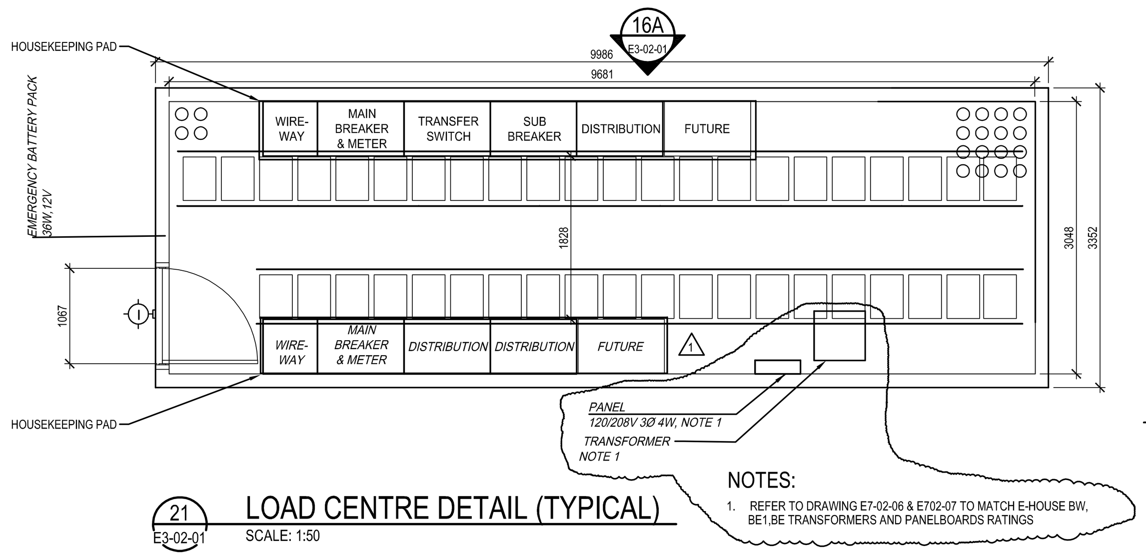

NOTES:
1. REFER TO DRAWING E7-02-06 & E702-07 TO MATCH E-HOUSE BW, BE1,BE TRANSFORMERS AND PANELBOARDS RATINGS

21 E3-02-01 LOAD CENTRE DETAIL (TYPICAL)
SCALE: 1:50

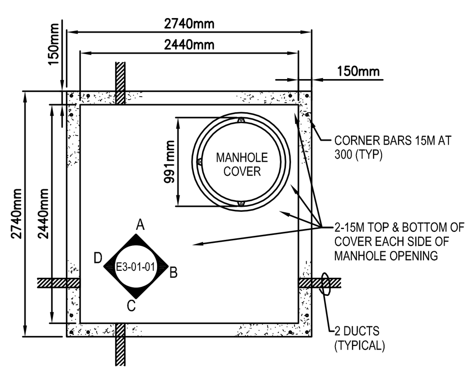

22 E3-02-01 MANHOLE DETAIL (TYPICAL)
SCALE: 1:50

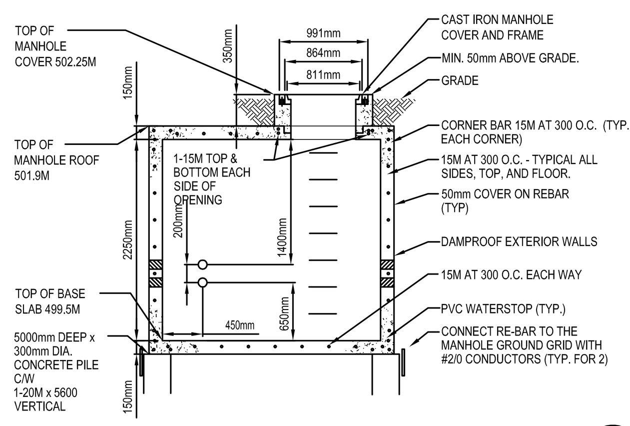

22A E3-02-01 MANHOLE ELEVATION A
SCALE: 1:50

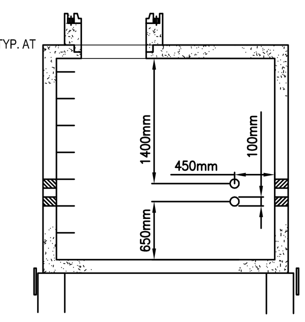

22B E3-02-01 MANHOLE ELEVATION B
SCALE: 1:50

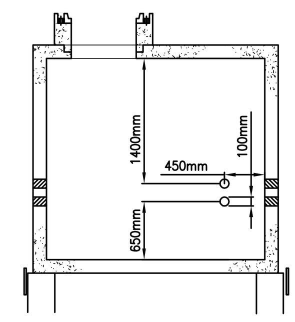

22C E3-02-01 MANHOLE ELEVATION C
SCALE: 1:50

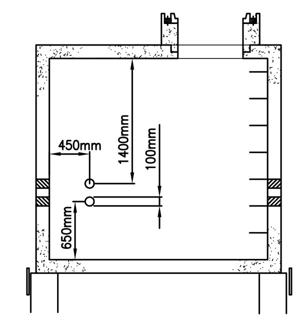

22D E3-02-01 MANHOLE ELEVATION D
SCALE: 1:50

NOTES:
1. COVER & FRAME TITAN FOUNDRY No. TF-116
1.1. COVER TO BE BOLT DOWN AND PAD LOCKABLE
2. SUPPLY AND INSTALL CABLE RACK AND CABLE PULLING EQUIPMENT

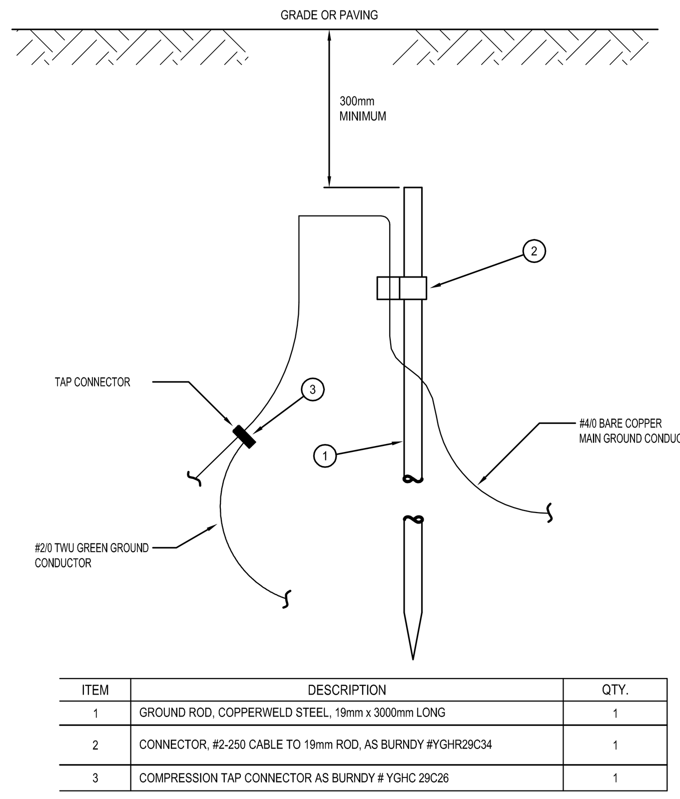

ITEM	DESCRIPTION	QTY.
1	GROUND ROD, COPPERWELD STEEL, 19mm x 3000mm LONG	1
2	CONNECTOR, #2-250 CABLE TO 19mm ROD, AS BURNDY #YGHR29C34	1
3	COMPRESSION TAP CONNECTOR AS BURNDY # YGHC 29C26	1

20 E3-02-01 GROUND ROD ASSEMBLY DETAIL
SCALE: N.T.S.

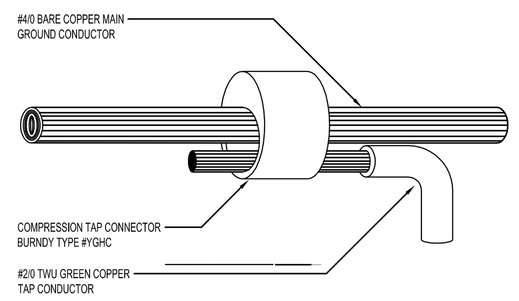

20A E3-02-01 TYPICAL CONNECTION TO MAIN GROUND GRID
SCALE: N.T.S.

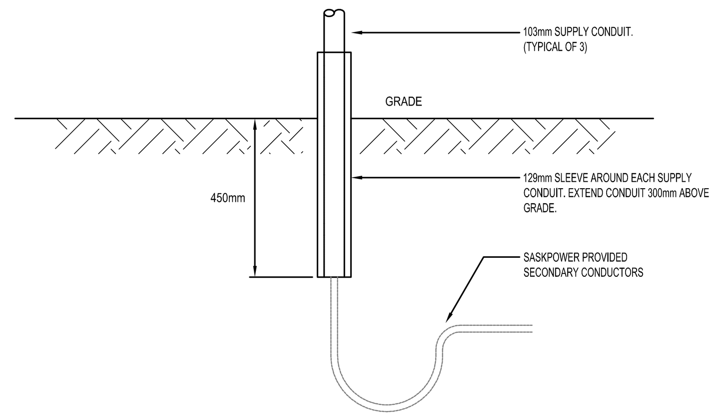

20B E3-02-01 SPLITTER SERVICE CONDUIT DETAIL
SCALE: N.T.S.

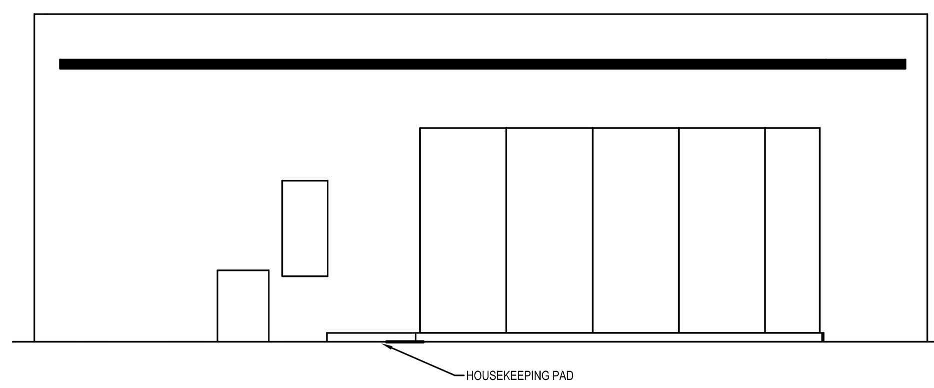

21A E3-02-01 LOAD CENTRE ELEVATION DETAIL (TYPICAL)
SCALE: 1:50

Public Works and Government Services Canada / Travaux publics et Services gouvernementaux Canada

REAL PROPERTY SERVICES
Western Region
SERVICES IMMOBILIERS
Région de l'ouest

WSP
203 WELLMAN CRESCENT
SASKATOON SASKATCHEWAN CANADA S7T 0J1
TEL.: 1-306-665-6223 | FAX: 1-306-665-6589 | WWW.WSPGROUP.COM

PROFESSIONAL ENGINEER
B.K. BERGLOF
MEMBER 5369
18/01/25
SASKATCHEWAN

Association of Professional Engineers & Geoscientists of Saskatchewan
CERTIFICATE OF AUTHORIZATION
WSP CANADA INC.
Number C0868
Permission to Consult held by:
Discipline Sk. Reg. No. Signature
ELECT 5369

Revision/Revision	Description/Description	Date/Date
1	ISSUED FOR ADDENDUM 1	29/03/2018
0	ISSUED FOR TENDER	25/01/2018

Client/client
CORRECTIONAL SERVICE CANADA

Project title/Titre du projet
SASKATCHEWAN PENITENTIARY ELECTRICAL UPGRADES 2017

Approved by/Approuvé par
BKB
Designed by/Concept par
WSM
Drawn by/Dessiné par
WSM
PWGSC Project Manager/Administrateur de Projets TPSGC
PWGSC, Architectural and Engineering Resources Manager/ Ressources Architectural et de Directeur d'ingénierie, TPSGC
Client/client
CORRECTIONAL SERVICE CANADA
Drawing title/Titre du dessin
PACKAGE 2 - NORTH EAST INSIDE THE WALLS
ELECTRICAL DETAILS

Project No./No. du projet	Sheet/Feuille	Revision no./La Révision no.
R.080653.001	E3-02-01 OF XX	1

PLOTTED ON: 3/28/2018 1:27:28 PM

0 10 20 30 40 50 60 70 80 90 100mm

31015