161-11133-00

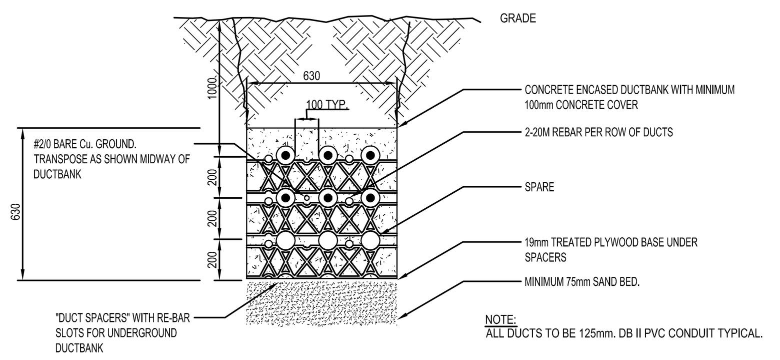

1 E3-01-01 TYPICAL CONSTRUCTION (DUCTBANK DETAIL)
SCALE: N.T.S.

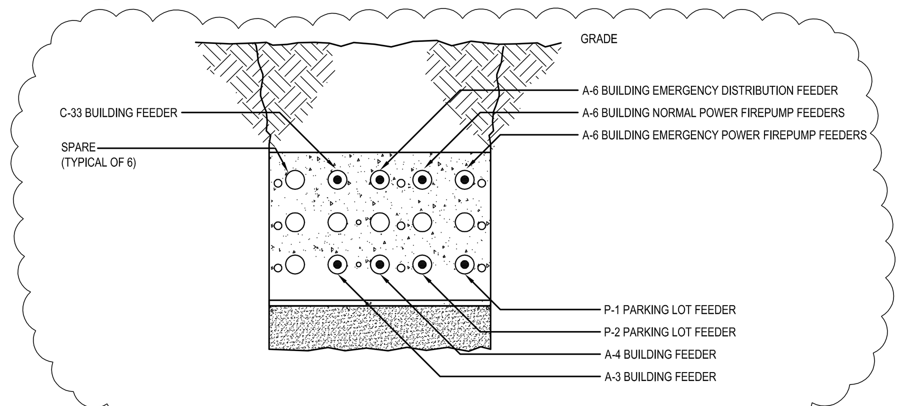

2 E3-01-01 NE E-HOUSE PULLPIT (DUCTBANK DETAIL)
SCALE: N.T.S.

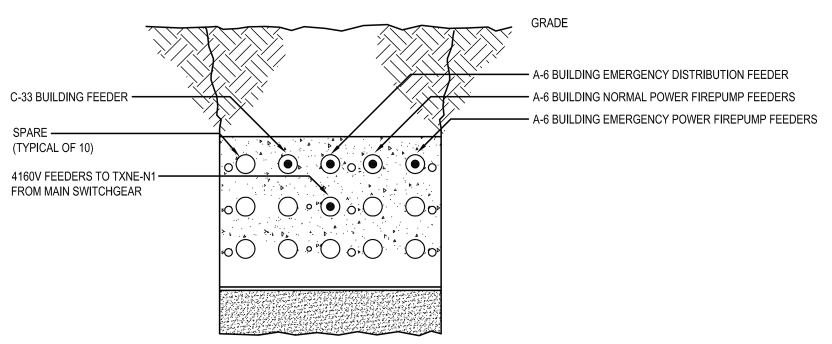

3 E3-01-01 A-6 & C-33 FEEDERS (DUCTBANK DETAIL)
SCALE: N.T.S.

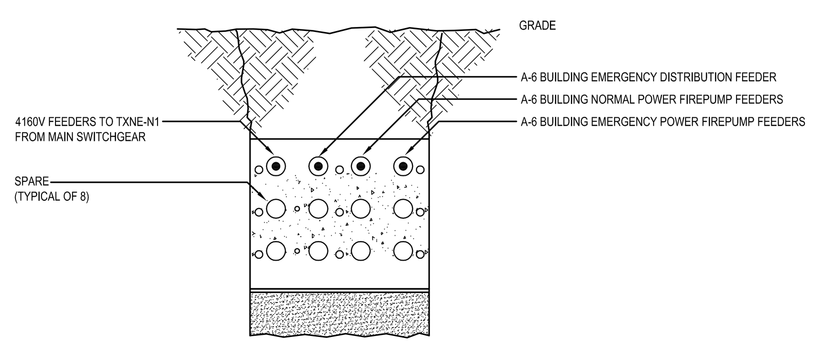

4 E3-01-01 A-6 FEEDERS (DUCTBANK DETAIL)
SCALE: N.T.S.

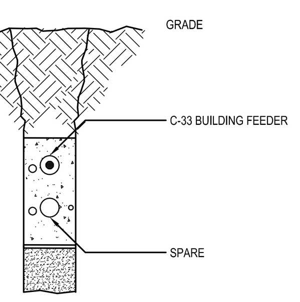

5 E3-01-01 C-33 FEEDER (DUCTBANK DETAIL)
SCALE: N.T.S.

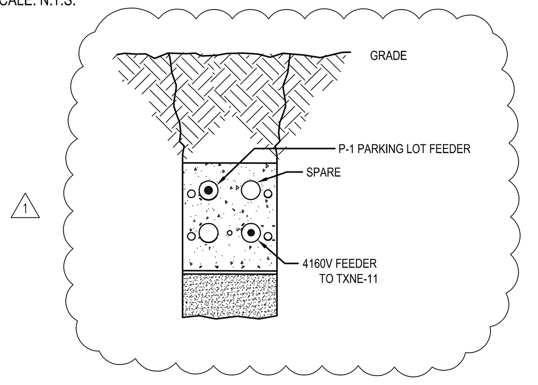

6 E3-01-01 P-1 PARKING FEEDER (DUCTBANK DETAIL)
SCALE: N.T.S.

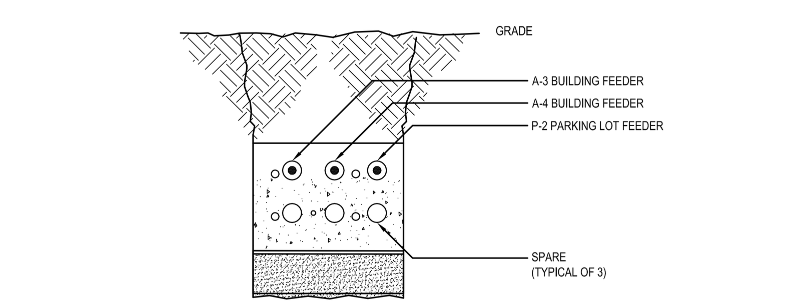

7 E3-01-01 A-3, A-4 & P-2 PARKING FEEDERS (DUCTBANK DETAIL)
SCALE: N.T.S.

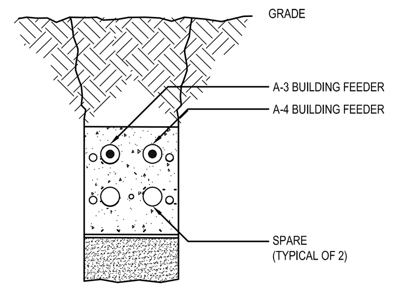

8 E3-01-01 A-3 & A-4 FEEDERS (DUCTBANK DETAIL)
SCALE: N.T.S.

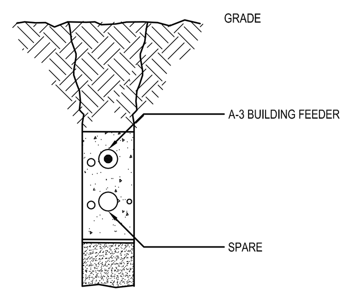

9 E3-01-01 A-3 FEEDER (DUCTBANK DETAIL)
SCALE: N.T.S.

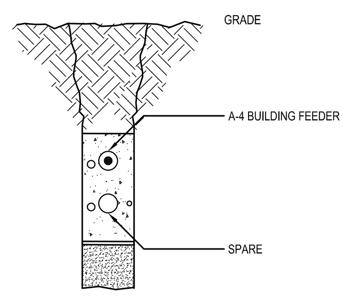

10 E3-01-01 A-4 FEEDER (DUCTBANK DETAIL)
SCALE: N.T.S.

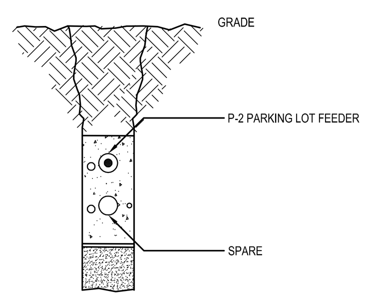

11 E3-01-01 P-2 PARKING FEEDER (DUCTBANK DETAIL)
SCALE: N.T.S.

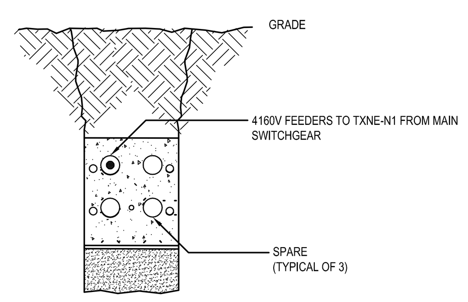

12 E3-01-01 NE E-HOUSE FEEDERS TO TXNE-N1 (DUCTBANK DETAIL)
SCALE: N.T.S.

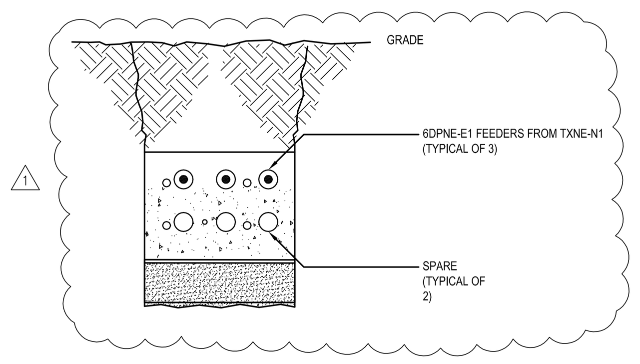

13 E3-01-01 NE E-HOUSE FEEDERS FROM TXNE-N1 (DUCTBANK DETAIL)
SCALE: N.T.S.

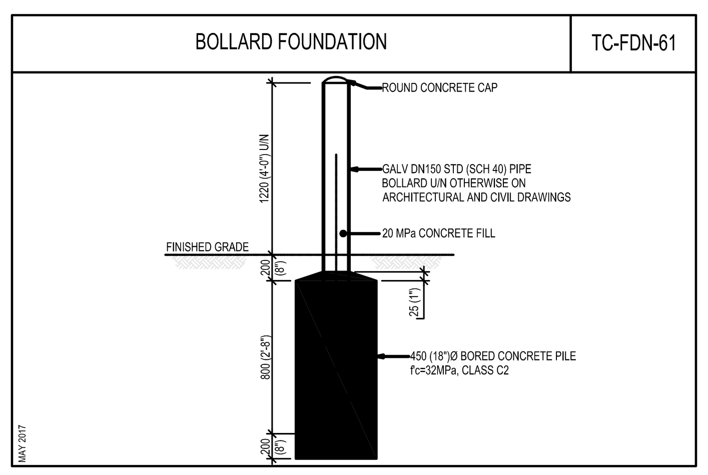

21 E3-01-01 BOLLARD DETAIL
SCALE: N.T.S.

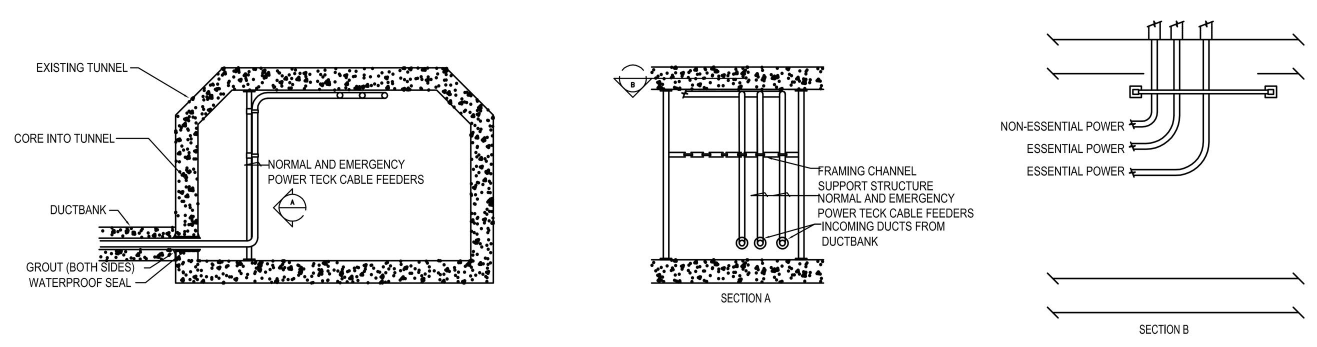

14 E3-01-01 DUCTBANK TO UTILITY TUNNEL TRANSITION
SCALE: N.T.S.

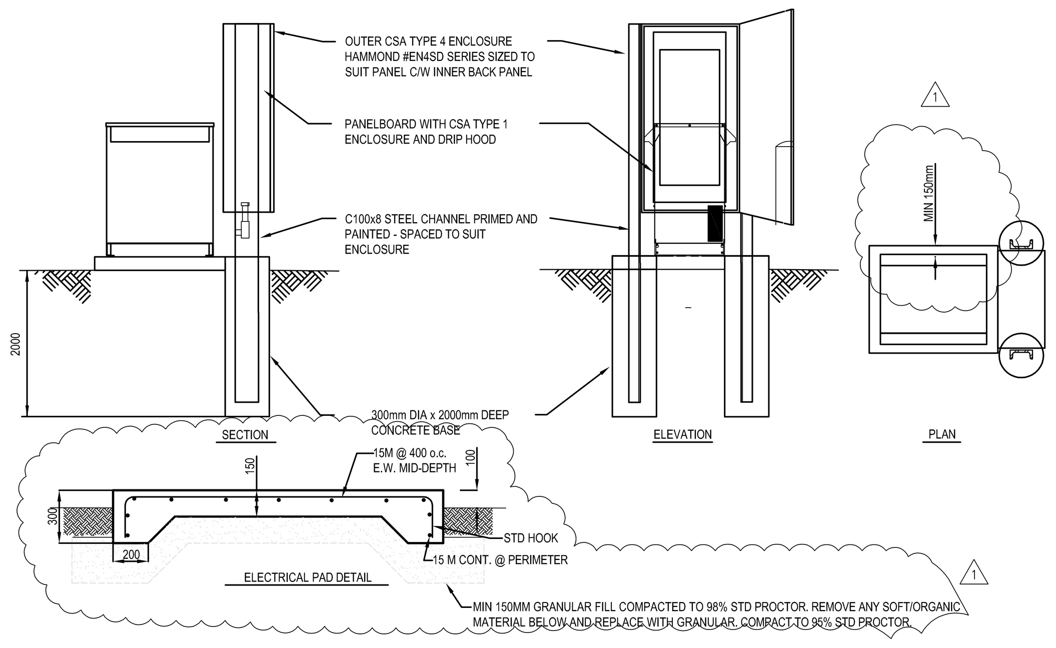

15 E3-01-01 PARKING DISTRIBUTION PANEL & TRANSFORMER DETAIL
SCALE: N.T.S.

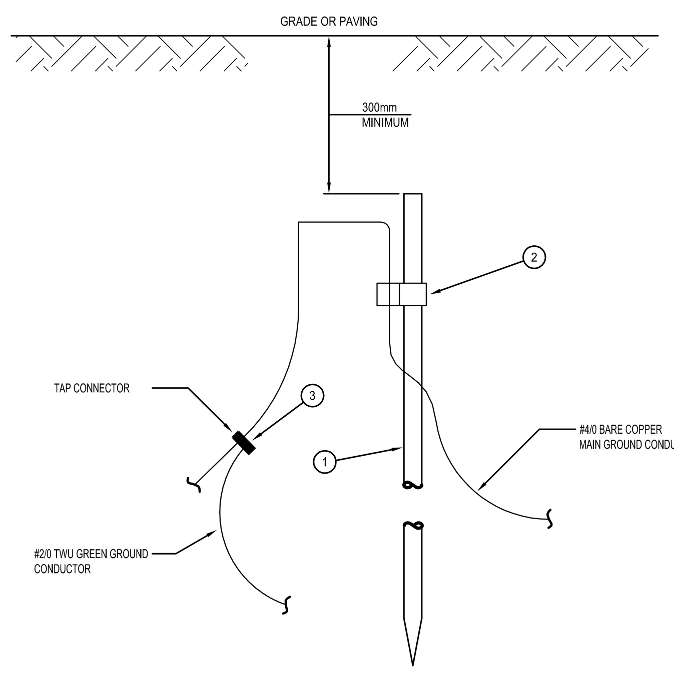

ITEM	DESCRIPTION	QTY.
1	GROUND ROD, COPPERWELD STEEL, 19mm x 3000mm LONG	1
2	CONNECTOR, #2-250 CABLE TO 19mm ROD, AS BURNDY #YGHR29C34	1
3	COMPRESSION TAP CONNECTOR AS BURNDY # YGHC 29C26	1

16 E3-01-01 GROUND ROD ASSEMBLY DETAIL
SCALE: N.T.S.

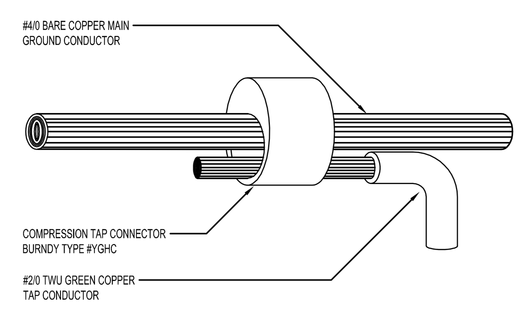

17 E3-01-01 TYPICAL CONNECTION TO MAIN GROUND GRID
SCALE: N.T.S.

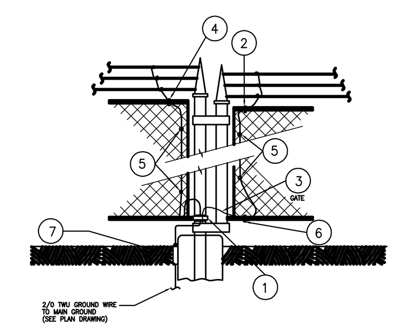

ITEM	DESCRIPTION	QTY.
1	CONNECTOR, GROUND, #2/0 AWG TO 3" I.P.S. PIPE, AS BURNDY #GD2026	1
2	CONNECTOR, GROUND, 1 1/4 " I.P.S. TO #2/0 AWG, AS BURNDY #GAR 1629	2
3	BRAIDED GROUND STRAP 300 mm LONG, AS BURNDY #BD12	1
4	CONNECTOR, GROUND, 1 1/4 " I.P.S. TO #2/0 AWG, AS BURNDY #GAR 1626	1
5	SERVIT CONNECTOR, AS BURNDY #KS26	10
6	CONNECTOR, GROUND, 1 1/4 " I.P.S. TO #2/0 AWG, AS BURNDY #GD 1626	1
7	1" PVC CONDUIT	1

18A E3-01-01 FENCE GROUNDING(SWING GATE) DETAIL
SCALE: N.T.S.

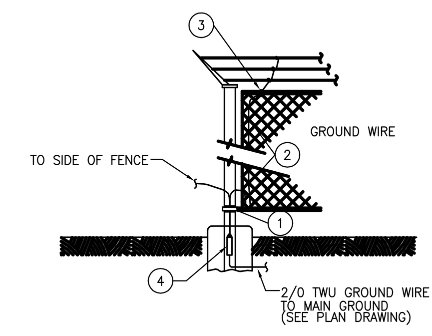

ITEM	DESCRIPTION	QTY.
1	CONNECTOR, AS BURNDY #GD 2029	1
2	SERVIT CONNECTOR, AS BURNDY #KS26	10
3	CONNNECTOR, GROUND 1 1/4 " PIPE TO #2/0 AWG, AS BURDY #GAR1626	2
4	1" PVC CONDUIT	1

18B E3-01-01 FENCE GROUNDING(CORNER POST) DETAIL
SCALE: N.T.S.

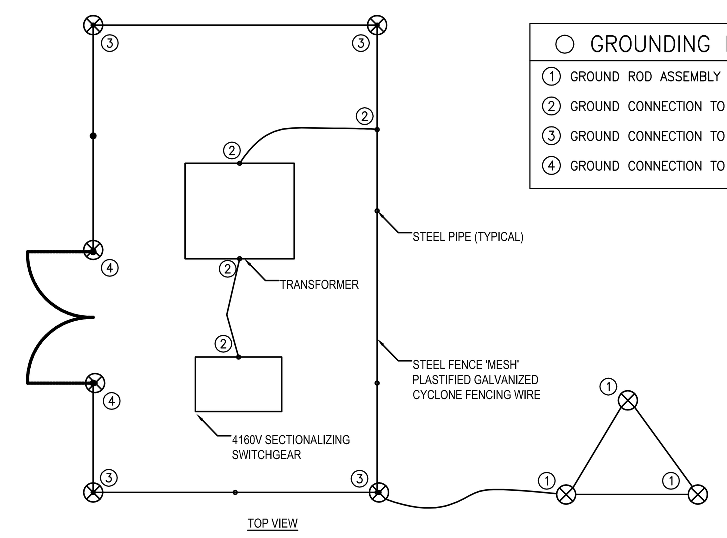

○ GROUNDING DETAIL LEGEND:
① GROUND ROD ASSEMBLY – SEE DETAIL 16 DWG E3-01-01
② GROUND CONNECTION TO GROUND GRID – SEE DETAIL 17 DWG E3-01-01
③ GROUND CONNECTION TO CORNER POST – SEE DETAIL 3 DWG E3-01-01
④ GROUND CONNECTION TO SWING GATE – SEE DETAIL 2 DWG E3-01-01

18C E3-01-01 FENCE GROUNDING DETAIL
SCALE: N.T.S.

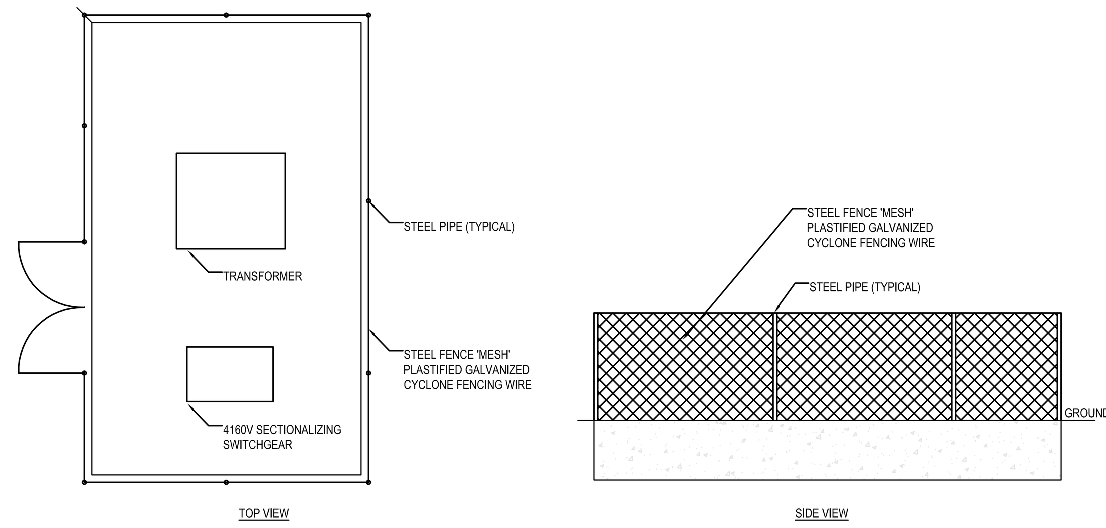

19 E3-01-01 FENCE DETAIL
SCALE: N.T.S.

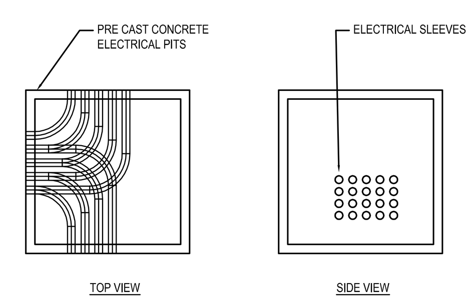

20 E3-01-01 PULLPIT DETAIL
SCALE: N.T.S.

Public Works and Government Services Canada / Travaux publics et Services gouvernementaux Canada

REAL PROPERTY SERVICES
Western Region
SERVICES IMMOBILIERS
Région de l'ouest

WSP
203 WELLMAN CRESCENT
SASKATOON SASKATCHEWAN CANADA S7T 0J1
TEL.: 1-306-665-6223 | FAX: 1-306-665-6569 | WWW.WSPGROUP.COM

PROFESSIONAL ENGINEER
B.K. BERGLOF
MEMBER 5369
18/01/25
SASKATCHEWAN

Association of Professional Engineers & Geoscientists of Saskatchewan
CERTIFICATE OF AUTHORIZATION
WSP CANADA INC.
Number C0868
Permission to Consult held by:
Discipline: ELECT Sk. Reg. No. 5369 Signature

Revision/Revision	Description/Description	Date/Date
1	ISSUED FOR ADDENDUM 3	12/04/2018
0	ISSUED FOR TENDER	25/01/2018

Client/client
CORRECTIONAL SERVICE CANADA

Project title/Titre du projet
SASKATCHEWAN PENITENTIARY ELECTRICAL UPGRADES 2017

Approved by/Approuve par
BKB
Designed by/Concept par
JMS
Drawn by/Dessine par
JMS
PWGSC Project Manager/Administrateur de Projets TPSGC
PWGSC, Architectural and Engineering Resources Manager/ Ressources Architectural et de Directeur d'ingénierie, TPSGC
Client/client
CORRECTIONAL SERVICE CANADA
Drawing title/Titre du dessin
PACKAGE 1 - NORTH EAST LOAD CENTRE ELECTRICAL DETAILS

Project No./No. du projet: R.080653.001
Sheet/Feuille: E3-01-01 OF XX
Revision no./La Révision no.: 1

PLOTTED ON: 4/12/2018 10:14:26 AM
31015