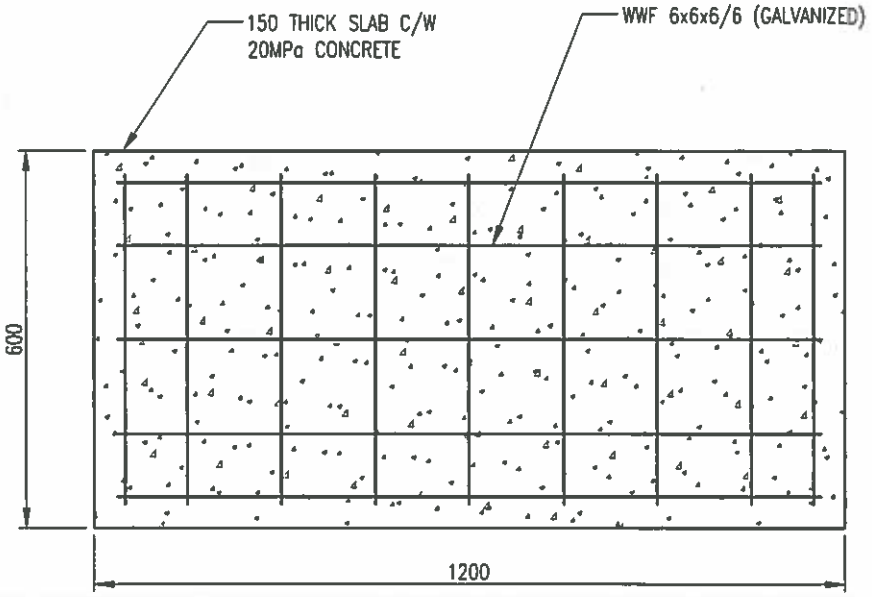

HOUSEKEEPING PAD DETAIL – TOP VIEW
SCALE: N.T.S.

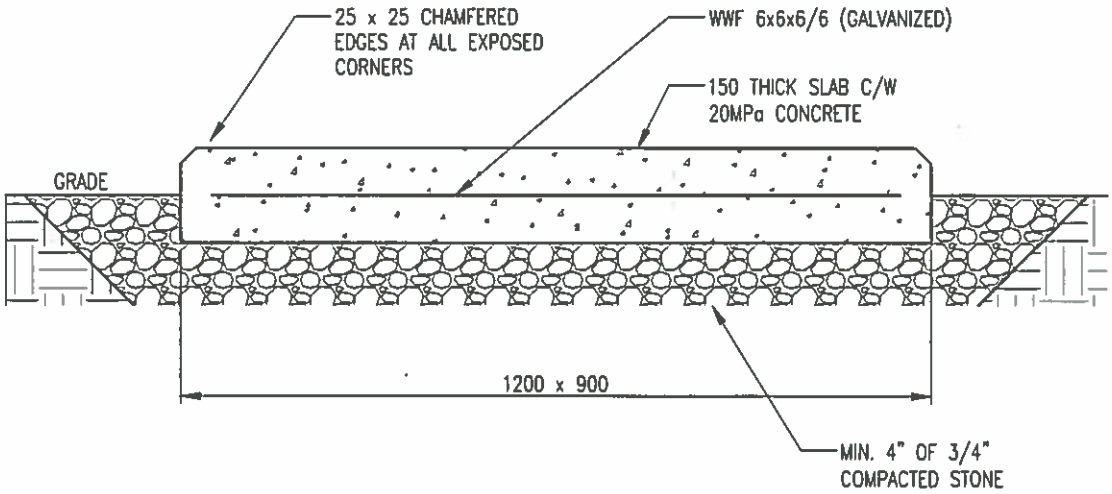

HOUSEKEEPING PAD DETAIL – SIDE VIEW
SCALE: N.T.S.

SANI ENGINEERING

No.	Description	Date
0	FOR REVIEW ONLY	22/11/17

STAMP

Use of this drawing constitutes acceptance of all terms and conditions as per S.E.L. Terms of Engagement

PROJECT
GREENING GOV'T OPERATIONS DFO, NEWFOUNDLAND & LABRADOR

TITLE
TYPICAL HOUSEKEEPING PAD DETAIL

CLIENT
M.LAWRENCE ENGINEERING

SCALE: AS NOTED	DATE: JANUARY 2018
DRAWN BY: SS	SHEET: SK-2
CHECKED BY: RS	
S.E.L. PROJECT NUMBER: 2018-11	