Public Works and Government Services Canada | Travaux publics et Services gouvernementaux Canada

RETURN BIDS TO:
RETOURNER LES SOUMISSIONS À:

Bid Receiving - PWGSC / Réception des soumissions - TPSGC
11 Laurier St. / 11, rue Laurier
Place du Portage , Phase III
Core 0B2 / Noyau 0B2
Gatineau
Québec
K1A 0S5
Bid Fax: (819) 997-9776

REQUEST FOR PROPOSAL
DEMANDE DE PROPOSITION

Proposal To: Public Works and Government Services Canada

We hereby offer to sell to Her Majesty the Queen in right of Canada, in accordance with the terms and conditions set out herein, referred to herein or attached hereto, the goods, services, and construction listed herein and on any attached sheets at the price(s) set out therefor.

Proposition aux: Travaux Publics et Services Gouvernementaux Canada

Nous offrons par la présente de vendre à Sa Majesté la Reine du chef du Canada, aux conditions énoncées ou incluses par référence dans la présente et aux annexes ci-jointes, les biens, services et construction énumérés ici sur toute feuille ci-annexée, au(x) prix indiqué(s).

Comments - Commentaires

Title - Sujet
Hangar Firefighting System

Solicitation No. - N° de l'invitation	**Date**
F7049-170130/B	2018-06-26

Client Reference No. - N° de référence du client
F7049-170130

GETS Reference No. - N° de référence de SEAG
PW-$$ML-058-26880

File No. - N° de dossier	**CCC No./N° CCC - FMS No./N° VME**
058ml.F7049-170130	

Solicitation Closes - L'invitation prend fin
at - à 02:00 PM
on - le 2018-07-12

Time Zone
Fuseau horaire
Eastern Daylight Saving Time EDT

F.O.B. - F.A.B. Specified Herein - Précisé dans les présentes
Plant-Usine: ☐ **Destination:** ☐ **Other-Autre:** ☑

Address Enquiries to: - Adresser toutes questions à:	**Buyer Id - Id de l'acheteur**
Nemati, Saeed	058ml

Telephone No. - N° de téléphone	**FAX No. - N° de FAX**
(873) 469-3617 ( )	( ) -

Destination - of Goods, Services, and Construction:
Destination - des biens, services et construction:
DEPARTMENT OF FISHERIES AND OCEANS
280 Southside Road
St John's
Newfoundland
A1C 5X1
Canada

Instructions: See Herein

Instructions: Voir aux présentes

Vendor/Firm Name and Address
Raison sociale et adresse du fournisseur/de l'entrepreneur

Delivery Required - Livraison exigée	**Delivery Offered - Livraison proposée**
See Herein	

Vendor/Firm Name and Address
Raison sociale et adresse du fournisseur/de l'entrepreneur

Telephone No. - N° de téléphone
Facsimile No. - N° de télécopieur

Name and title of person authorized to sign on behalf of Vendor/Firm (type or print)
Nom et titre de la personne autorisée à signer au nom du fournisseur/ de l'entrepreneur (taper ou écrire en caractères d'imprimerie)

Signature **Date**

Issuing Office - Bureau de distribution
Marine Machinery and Services / Machineries et services maritimes
11 Laurier St. / 11, rue Laurier
6C2, Place du Portage
Gatineau
Québec
K1A 0S5

Canada

This bid solicitation cancels and supersedes previous bid solicitation number F7049-170130/A dated 6 April 2018 with a closing of 25 May 2018 at 14:00 Eastern Daylight Time (EDT). A debriefing or feedback session will be provided upon request to suppliers who bid on the previous solicitation.

TABLE OF CONTENTS

PART 1 - GENERAL INFORMATION

1.1 Security Requirements

There is no security requirements associated with this requirement.

1.2 Statement of Requirement

The requirement is for the supply of two (2) Shipsets of approved marine fire-fighting systems as replacement for existing systems to cover the helicopter hangar and pad operations for Canadian Coast Guard vessels Ann Harvey and George R Pearkes, all in accordance with the Annex “A” SOR.

In addition, this requirement includes the following options:

1. Five (5) options of one (1) additional shipsets; and
2. Three (3) option of one (1) year additional period from the date of the contract award.

1.3 Debriefings

Bidders may request a debriefing on the results of the bid solicitation process. Bidders should make the request to the Contracting Authority within 15 working days from receipt of the results of the bid solicitation process. The debriefing may be in writing, by telephone or in person.

1.4 Trade Agreements

"The requirement is subject to the provisions of the North American Free Trade Agreement (NAFTA) and the Canadian Free Trade Agreement (CFTA)."

PART 2 - BIDDER INSTRUCTIONS

2.1 Standard Instructions, Clauses and Conditions

All instructions, clauses and conditions identified in the bid solicitation by number, date and title are set out in the Standard Acquisition Clauses and Conditions Manual (https://buyandsell.gc.ca/policy-and-guidelines/standard-acquisition-clauses-and-conditions-manual) issued by Public Works and Government Services Canada.

Bidders who submit a bid agree to be bound by the instructions, clauses and conditions of the bid solicitation and accept the clauses and conditions of the resulting contract.

The 2003 (2018-05-22) Standard Instructions - Goods or Services - Competitive Requirements, are incorporated by reference into and form part of the bid solicitation.

The 2003 standard instructions is amended as follows:

- Section 5, entitled Submission of bids, is amended as follows:
  - subsection 1 is deleted entirely and replaced with the following: "Canada requires that each bid, at solicitation closing date and time or upon request from the Contracting Authority, for example in the case of epost Connect service, be signed by the Bidder or by an authorized representative of the Bidder. If a bid is submitted by a joint venture, it must be in accordance with the section entitled Joint venture."
  - subsection 2.d is deleted entirely and replaced with the following: "send its bid only to the specified Bid Receiving Unit of Public Works and Government Services Canada (PWGSC) identified in the bid solicitation, or to the address specified in the bid solicitation, as applicable;"
  - subsection 2.e is deleted entirely and replaced with the following: "ensure that the Bidder's name, return address and procurement business number, bid solicitation number, and solicitation closing date and time are clearly visible on the bid; and,"
- Section 6, entitled Late bids, is deleted entirely and replaced with the following: "PWGSC will return bids delivered after the stipulated solicitation closing date and time, unless they qualify as a delayed bid as described in the section entitled Delayed bids. For bids submitted using means other than the Canada Post Corporation's epost Connect service, the bid will be returned. For bids submitted using Canada Post Corporation's epost Connect service, conversations initiated by the Bid Receiving Unit via the epost Connect service that contain access, records and information pertaining to a late bid will be deleted."
- Section 07, entitled Delayed bids, is amended as follows:
  - Subsection 1 is amended to add the following piece of evidence: "d. a CPC epost Connect service date and time record indicated in the epost Connect conversation activity."
- Section 8, entitled Transmission by facsimile, is deleted and replaced by the following: "Transmission by facsimile or by epost Connect
  1. ePost Connect
     a. Unless specified otherwise in the bid solicitation, bids may be submitted by using the epost Connect service provided by Canada Post Corporation (https://www.canadapost.ca/web/en/products/details.page?article=epost_connect_send_a).
     b. To submit a bid using epost Connect service, the Bidder must either:
        i. send directly its bid only to the specified PWGSC Bid Receiving Unit, using its own licensing agreement for epost Connect provided by Canada Post Corporation; or
        ii. send as early as possible, and in any case, at least six business days prior to the solicitation closing date and time, an email that includes the bid solicitation number to the specified PWGSC Bid Receiving Unit requesting to open an epost

Connect conversation. Requests to open an epost Connect conversation received after that time may not be answered.

c. If the Bidder is sending an email to the Bid Receiving Unit, the Bid Receiving Unit will then initiate an epost Connect conversation which will allow the Bidder to transmit its bid afterward at any time prior to the solicitation closing date and time. The epost Connect conversation will create an email notification from Canada Post Corporation prompting the Bidder to access the message within the conversation, and the Bidder can reply to the email notification by transmitting its bid.

d. If the Bidder is using its own licensing agreement to send its bid, the Bidder must keep the epost Connect conversation open until at least 30 business days after solicitation closing date and time.

e. The email address of PWGSC Bid Receiving Unit in Headquarters is: TPSGC.DGAreceptiondessoumissions-ABBidReceiving.PWGSC@tpsgc-pwgsc.gc.ca. The solicitation number must be identified in the epost Connect message field of all electronic transfers.

f. It should be noted that the use of epost Connect service requires a Canadian mailing address. Should a bidder not have a Canadian address, they may use the Bid Receiving Unit address specified on page 1 of the solicitation in order to register for the epost Connect service.

g. For bids transmitted by epost Connect service, Canada will not be responsible for any failure attributable to the transmission or receipt of the bid including, but not limited to, the following:
   i. receipt of a garbled or incomplete bid;
   ii. availability or condition of the epost Connect service;
   iii. incompatibility between the sending and receiving equipment;
   iv. delay in transmission or receipt of the bid;
   v. failure of the Bidder to properly identify the bid;
   vi. illegibility of the bid;
   vii. security of bid data; or
   viii. inability to create an electronic conversation through the epost Connect service.

h. A bid transmitted by epost Connect service constitutes the formal bid of the Bidder and must be submitted in accordance with the section entitled Submission of bids."

2.1.1 Equivalent Products

1. Products that are equivalent in form, fit, function and quality to the item(s) specified in the bid solicitation will be considered where the Bidder:

   a. designates the brand name, model and/or part number of the substitute product;

   b. states that the substitute product is fully interchangeable with the item specified;

   c. provides complete specifications and descriptive literature for each substitute product;

   d. provides compliance statements that include technical specifics showing the substitute product meets all mandatory performance criteria that are specified in the bid solicitation; and

   e. clearly identifies those areas in the specifications and descriptive literature that support the substitute product's compliance with any mandatory performance criteria.

2. Products offered as equivalent in form, fit, function and quality will not be considered if:

a. the bid fails to provide all the information requested to allow the Contracting Authority to fully evaluate the equivalency of each substitute product; or

b. the substitute product fails to meet or exceed the mandatory performance criteria specified in the bid solicitation for that item.

3. In conducting its evaluation of the bids, Canada may, but will have no obligation to, request bidders offering a substitute product to demonstrate, at the sole cost of bidders, that the substitute product is equivalent to the item specified in the bid solicitation.

2.2 Submission of Bids

Bids must be submitted only to Public Works and Government Services Canada (PWGSC) Bid Receiving Unit by the date, time and place indicated on page 1 of the bid solicitation.

Due to the nature of the bid solicitation, bids transmitted by facsimile to PWGSC will not be accepted.

2.3 Enquiries - Bid Solicitation

All enquiries must be submitted in writing to the Contracting Authority no later than (7) calendar days before the bid closing date. Enquiries received after that time may not be answered.

Bidders should reference as accurately as possible the numbered item of the bid solicitation to which the enquiry relates. Care should be taken by Bidders to explain each question in sufficient detail in order to enable Canada to provide an accurate answer. Technical enquiries that are of a proprietary nature must be clearly marked "proprietary" at each relevant item. Items identified as "proprietary" will be treated as such except where Canada determines that the enquiry is not of a proprietary nature. Canada may edit the question(s) or may request that the Bidder do so, so that the proprietary nature of the question(s) is eliminated, and the enquiry can be answered to all Bidders. Enquiries not submitted in a form that can be distributed to all Bidders may not be answered by Canada.

2.4 Applicable Laws

Any resulting contract must be interpreted and governed, and the relations between the parties determined, by the laws in force in Ontario.

Bidders may, at their discretion, substitute the applicable laws of a Canadian province or territory of their choice without affecting the validity of their bid, by deleting the name of the Canadian province or territory specified and inserting the name of the Canadian province or territory of their choice. If no change is made, it acknowledges that the applicable laws specified are acceptable to the Bidders.

PART 3 - BID PREPARATION INSTRUCTIONS

3.1 Bid Preparation Instructions

If the Bidder chooses to submit its bid electronically, Canada requests that the Bidder submits its bid in accordance with section 8 of the 2003 standard instructions and as amended in Part 2 - Bidder Instructions, Article 2.1 Standard Instructions, Clauses and Conditions. Bidders are required to provide their bid in a single transmission. The epost Connect service has the capacity to receive multiple documents, up to 1GB per individual attachment.

The bid must be gathered per section and **separated** as follows:

Section I: Technical Bid (1 electronic file)
Section II: Financial Bid (1 electronic file)
Section III: Certifications (1 electronic file)

If the Bidder is simultaneously providing a hard copy of the bid using another acceptable delivery method, and if there is a discrepancy between the wording of the soft copy and the hard copy, the wording of the soft copy will have priority over the wording of the hard copy.

- If the Bidder chooses to submit its bid in hard copies, Canada requests that the Bidder submits its bid in separately bound sections as follows:

  Section I: Technical Bid (2 hard copies) and 2 soft copies on USB key
  Section II: Financial Bid (1 hard copy)
  Section III: Certifications (2 hard copies) and 2 soft copies on USB key

  If there is a discrepancy between the wording of the soft copy and the hard copy, the wording of the hard copy will have priority over the wording of the soft copy.

"Due to the nature of the bid solicitation, bids transmitted by facsimile will not be accepted."

Canada requests that bidders follow the format instructions described below in the preparation of hard copy of their bid:

(a) use 8.5 x 11 inch (216 mm x 279 mm) paper;
(b) use a numbering system that corresponds to the bid solicitation.

In April 2006, Canada issued a policy directing federal departments and agencies to take the necessary steps to incorporate environmental considerations into the procurement process Policy on Green Procurement (http://www.tpsgc-pwgsc.gc.ca/ecologisation-greening/achats-procurement/politique-policy-eng.html). To assist Canada in reaching its objectives, bidders should:

1) use 8.5 x 11 inch (216 mm x 279 mm) paper containing fibre certified as originating from a sustainably-managed forest and containing minimum 30% recycled content; and

2) use an environmentally-preferable format including black and white printing instead of colour printing, printing double sided/duplex, using staples or clips instead of cerlox, duotangs or binders.

Section I: Technical Bid
In their technical bid, Bidders should explain and demonstrate how they propose to meet the requirements and how they will carry out the Work.

Section II: Financial Bid
Bidders must submit their financial bid in accordance with the Financial Bid Presentation Sheet in the Financial Evaluation Plan at Annex "D".

3.1.1 Electronic Payment of Invoices – Bid

If you are willing to accept payment of invoices by Electronic Payment Instruments, complete Annex “C” Electronic Payment Instruments, to identify which ones are accepted.

If Annex “C” Electronic Payment Instruments is not completed, it will be considered as if Electronic Payment Instruments are not being accepted for payment of invoices.

Acceptance of Electronic Payment Instruments will not be considered as an evaluation criterion.

3.1.2 Exchange Rate Fluctuation

1. The Bidder may request Canada to assume the risks and benefits of exchange rate fluctuations. If the Bidder claims for an exchange rate adjustment, this request must be clearly indicated in the bid at time of bidding. The Bidder must submit form PWGSC-TPSGC 450, Claim for Exchange Rate Adjustments with its bid, indicating the Foreign Currency Component (FCC) in Canadian dollars for each line item for which an exchange rate adjustment is required.

2. The FCC is defined as the portion of the price or rate that will be directly affected by exchange rate fluctuations. The FCC should include all related taxes, duties and other costs paid by the Bidder and which are to be included in the adjustment amount.

3. The total price paid by Canada on each invoice will be adjusted at the time of payment, based on the FCC and the exchange rate fluctuation provision in the contract. The exchange rate adjustment will only be applied where the exchange rate fluctuation is greater than 2% (increase or decrease).

4. At time of bidding, the Bidder must complete columns (1) to (4) on form PWGSC-TPSGC 450, for each line item where they want to invoke the exchange rate fluctuation provision. Where bids are evaluated in Canadian dollars, the dollar values provided in column (3) should also be in Canadian dollars, so that the adjustment amount is in the same currency as the payment.

5. Alternate rates or calculations proposed by the Bidder will not be accepted for the purposes of this exchange rate fluctuation provision.

3.1.3 SACC Manual Clauses

Section III: Certifications
Bidders must submit the certifications and additional information required under Part 5.

PART 4 - EVALUATION PROCEDURES AND BASIS OF SELECTION

4.1 Evaluation Procedures

(a) Bids will be assessed in accordance with the entire requirement of the bid solicitation including the technical and financial evaluation criteria.

(b) An evaluation team composed of representatives of Canada will evaluate the bids.

4.1.1 Technical Evaluation

Bids will be assessed in accordance with the entire requirement of the bid solicitation including compliance with the mandatory criteria and requirements as detailed in Annex “A”

4.1.1.1 Mandatory Technical Criteria

To be declared responsive, a bid must:

Meet all mandatory technical criteria as described at Annex “D” - Evaluation Plan, paragraph 2.0, Mandatory Technical Criteria.

4.1.2 Financial Evaluation

Evaluation of Price - Canadian / Foreign Bidders

1. The price of the bid will be evaluated as follows:
   a. Canadian-based bidders must submit firm prices, Canadian customs duties and excise taxes included, and Applicable Taxes excluded.

   b. Foreign-based bidders must submit firm prices, Canadian customs duties, excise taxes and Applicable Taxes excluded. Canadian customs duties and excise taxes payable by Canada will be added, for evaluation purposes only, to the prices submitted by foreign-based bidders.

2. Unless the bid solicitation specifically requires bids to be submitted in Canadian currency, bids submitted in foreign currency will be converted to Canadian currency for evaluation purposes. The rate given by the Bank of Canada in effect on the bid solicitation closing date, or on another date specified in the bid solicitation, will be applied as a conversion factor to the bids submitted in foreign currency.

3. Canada requests that bidders provide prices Delivered Duty Paid, DDP destination Incoterms 2010.

4. For the purpose of the bid solicitation, bidders with an address in Canada are considered Canadian-based bidders and bidders with an address outside of Canada are considered foreign-based bidders.

   The price of the bids will be evaluated as described in Annex “D” - Evaluation Plan, paragraph 3.0, Financial Evaluation.

4.2 Basis of Selection

A bid must comply with the requirements of the bid solicitation and meet all mandatory technical and financial evaluation criteria to be declared responsive. The responsive bid with the lowest evaluated price will be recommended for award of a contract.

PART 5 – CERTIFICATIONS AND ADDITIONAL INFORMATION

Bidders must provide the required certifications and additional information to be awarded a contract.

The certifications provided by Bidders to Canada are subject to verification by Canada at all times. Unless specified otherwise, Canada will declare a bid non-responsive, or will declare a contractor in default if any certification made by the Bidder is found to be untrue whether made knowingly or unknowingly, during the bid evaluation period or during the contract period.

The Contracting Authority will have the right to ask for additional information to verify the Bidder's certifications. Failure to comply and to cooperate with any request or requirement imposed by the Contracting Authority will render the bid non-responsive or constitute a default under the Contract.

5.1 Certifications Required with the Bid

Bidders must submit the following duly completed certifications as part of their bid.

5.1.1 Integrity Provisions - Declaration of Convicted Offences

In accordance with the Integrity Provisions of the Standard Instructions, all bidders must provide with their bid, **if applicable**, the declaration form available on the Forms for the Integrity Regime website (http://www.tpsgc-pwgsc.gc.ca/ci-if/declaration-eng.html), to be given further consideration in the procurement process.

5.2 Certifications Precedent to Contract Award and Additional Information

The certifications and additional information listed below should be submitted with the bid, but may be submitted afterwards. If any of these required certifications or additional information is not completed and submitted as requested, the Contracting Authority will inform the Bidder of a time frame within which to provide the information. Failure to provide the certifications or the additional information listed below within the time frame provided will render the bid non-responsive.

5.2.1 Integrity Provisions – Required Documentation

In accordance with the section titled Information to be provided when bidding, contracting or entering into a real procurement agreement of the Ineligibility and Suspension Policy (http://www.tpsgc-pwgsc.gc.ca/ci-if/politique-policy-eng.html), the Bidder must provide the required documentation, as applicable, to be given further consideration in the procurement process.

5.2.2 Federal Contractors Program for Employment Equity - Bid Certification

By submitting a bid, the Bidder certifies that the Bidder, and any of the Bidder's members if the Bidder is a Joint Venture, is not named on the Federal Contractors Program (FCP) for employment equity "FCP Limited Eligibility to Bid" list available at the bottom of the page of the Employment and Social Development Canada (ESDC) - Labour's website (https://www.canada.ca/en/employment-social-development/programs/employment-equity/federal-contractor-program.html#).

Canada will have the right to declare a bid non-responsive if the Bidder, or any member of the Bidder if the Bidder is a Joint Venture, appears on the "FCP Limited Eligibility to Bid" list at the time of contract award.

5.2.3 Certification of compliance

The Bidder must provide a certification of compliance with the article of statement of requirement detailed in Annex "A''.

PART 6 - RESULTING CONTRACT CLAUSES

The following clauses and conditions apply to and form part of any contract resulting from the bid solicitation.

6.1 Security Requirements

There is no security requirements associated with the requirement.

6.2 Statement of Requirement

The requirement is for the supply of two (2) Shipsets of approved marine fire-fighting systems as replacement for existing systems to cover the helicopter hangar and pad operations for Canadian Coast Guard vessels Ann Harvey and George R Pearkes, all in accordance with the Annex “A” SOR.

In addition, this requirement includes the following options:

1. Five (5) options of one (1) Shipset of approved marine fire-fighting systems; and
2. Three (3) option of one (1) year additional period from the date of the contract award.

6.3 Standard Clauses and Conditions

All clauses and conditions identified in the Contract by number, date and title are set out in the Standard Acquisition Clauses and Conditions Manual (https://buyandsell.gc.ca/policy-and-guidelines/standard-acquisition-clauses-and-conditions-manual) issued by Public Works and Government Services Canada.

6.3.1 General Conditions

2010A (2018-06-21), General Conditions - Goods (Medium Complexity), apply to and form part of the Contract.

At 2010A 09 (2014-09-25) Warranty;

A. Delete: Paragraph 1 in its entirely; and
B. Insert:

1. Despite inspection and acceptance of the Work by or on behalf of Canada and without restricting any provisions of the Contract or any condition, warranty or provision imposed by law, the Contractor, if requested by Canada to do so, must replace, repair or correct, at its own option and expense any work that becomes defective or fails to conform to the requirements of the Contract, where applicable. The warranty period will be 12 months after commissioning and acceptance of the Work or the length of the Contractor's or manufacturer's standard warranty period, whichever is longer.

6.4 Term of Contract

6.4.1 Period of the Contract

The Work is to be performed during the period of 1 September 2018 to 1 November 2018.

6.4.2 Option to Extend the Contract

The Contractor grants to Canada the irrevocable option to extend the term of the Contract by up to three (3) additional one (1) year period(s) under the same conditions. The Contractor agrees that, during the extended period of the Contract, it will be paid in accordance with the applicable provisions as set out in the Basis of Payment

Canada may exercise this option at any time by sending a written notice to the Contractor at least thirty (30) calendar days before the expiry date of the Contract. The option may only be exercised by the Contracting Authority, and will be evidenced for administrative purposes only, through a contract amendment.

6.4.3 Delivery Dates

All the deliverables for each vessel must be received at its CCGS base on or before planned date specified in the following time table:

Shipsets for the Initial contract		
CCGS Vessel Name	**Base**	**delivery planned Date for shipsets**
Ann Harvey	St. John's, NL	October 15th, 2018
Georges R Pearkes	St. John's, NL	October 15th, 2018

The Contractor grants to Canada the irrevocable option to add five (5) shipsets under the same conditions at the prices stated in the contract.

Canada may exercise this option at any time by sending a written notice to the Contractor at least thirty (30) calendar days before the expiry date of the Contract. The option may only be exercised by the Contracting Authority, and will be evidenced for administrative purposes only, through a contract amendment.

Optional 5 shipsets		
CCGS Vessel Name	**Base**	**delivery planned Date for shipsets**
Sir William Alexander	Halifax, NS	Nov. 30th 2018
Edward Cornwallis	Halifax, NS	Nov. 30th 2018
Sir Wilfrid Laurier	Victoria, BC	Nov. 30th 2019
Henry Larsen	St. John's, NL	Jan 30th, 2019
Leonard J. Cowley	St. John's, NL	Jan 30th, 2020

6.4.4 Delivery Points

Delivery of the requirement will be made to delivery point(s) specified at Annex "A" of the Contract.

6.5 Authorities

6.5.1 Contracting Authority

The Contracting Authority for the Contract is:

Name: .....Saeed Nemati M.Eng.
Title: .....Supply Team Leader
Public Works and Government Services Canada
Defence and Marine Procurement Branch
Directorate: REFIT, LOGISTICS AND SMALL VESSEL CONSTRUCTION DIRECTORATE
Address: .....11 Laurier Street, Portage III, 6C2, Gatineau QC K1A 0S5
Telephone: 873-469-3617
E-mail address: .....Saeed.Nemati@tpsgc-pwgsc.gc.ca

The Contracting Authority is responsible for the management of the Contract and any changes to the Contract must be authorized in writing by the Contracting Authority. The Contractor must not perform work in excess of or outside the scope of the Contract based on verbal or written requests or instructions from anybody other than the Contracting Authority.

6.5.2 Technical Authority

The Technical Authority for the Contract is:

Name: .....Jason R. Baggs
Title: .....VLE 1100's vessel project director
Organization: .....Fisheries and Oceans Canada

Telephone: .....
E-mail address: .....***To be inserted at contract award***

The Technical Authority named above is the representative of the department or agency for whom the Work is being carried out under the Contract and is responsible for all matters concerning the technical content of the Work under the Contract. Technical matters may be discussed with the Technical Authority, however the Technical Authority has no authority to authorize changes to the scope of the Work. Changes to the scope of the Work can only be made through a contract amendment issued by the Contracting Authority.

6.5.3 Contractor's Representative

The Contractor's Representative for the contract is: ***To be inserted at contract award***

Name: _____
Title: _____
Organization: _____
Address: _____
Telephone: ___-___-_____
Facsimile: ___-___-_____
E-mail address: _____

6.6 Payment

6.6.1 Basis of Payment

In consideration of the Contractor satisfactorily completing all of its obligations under the Contract, the Contractor will be paid firm price(s), as specified in Annex "B", Basis of Payment, Delivered Duty Paid (DDP) Incoterm 2010, at CCGS bases. Canadian customs duties and excise taxes are included and Applicable Taxes are extra.

Canada will not pay the Contractor for any design changes, modifications or interpretations of the Work, unless they have been approved, in writing, by the Contracting Authority before their incorporation into the Work.

6.6.2 Limitation of Price

SACC Manual clause C6000C (2017-08-17) Limitation of Price

6.6.3 Method of Payment

SACC Manual clause H1001C (2008-05-12) Multiple Payments

6.6.4 SACC Manual Clauses

C2000C (2007-11-30), Taxes - Foreign-based Contractor;
C2605C (2008-05-12), Canadian Customs Duties and Sales Tax - Foreign-based Contractor;
C2608C (2015-02-25), Canadian Customs Documentation;
C0305C (2014-06-26), Cost Submission - Limitation of Expenditure or Ceiling Price;

6.6.5 Electronic Payment of Invoices – Contract

The Contractor accepts to be paid using any of the following Electronic Payment Instrument(s):

a. Visa Acquisition Card;
b. MasterCard Acquisition Card;
c. Direct Deposit (Domestic and International);
d. Electronic Data Interchange (EDI);
e. Wire Transfer (International Only);
f. Large Value Transfer System (LVTS) (Over $25M)

To be inserted at contract award

6.6.6 Exchange rate fluctuation adjustment

1. The foreign currency component (FCC) is defined as the portion of the price or rate that will be directly affected by exchange rate fluctuation. The FCC should include all related taxes, duties and other costs paid by the Bidder and which are to be included in the adjustment amount.

2. For each line item where a FCC is identified, Canada assumes the risks and benefits for exchange rate fluctuation, as shown in the Basis of Payment. For such items, the exchange rate fluctuation amount is determined in accordance with the provision of this clause.

3. The total price paid by Canada on each invoice will be adjusted at the time of payment. The exchange rate adjustment amount will be calculated in accordance with the following formula:

Exchange rate adjustment = FCC x Qty x (i_1 - i_0) / i_0
where formula variables correspond to:

FCC
Foreign currency component (per unit)

Qty
quantity of units

i_0
Initial exchange rate (CAN$ per unit of foreign currency [for example US$1]).
The initial exchange rate is set as the Bank of Canada rate on the solicitation closing date. The Bank of Canada publishes its rates each business day by 16:30 Eastern Time.

i_1
Exchange rate for adjustments (ERA) (CAN$ per unit of foreign currency [for example US$1]).
The Bank of Canada publishes its rates each business day by 16:30 Eastern Time.

a. The ERA for goods will be the Bank of Canada rate on the date the goods were delivered.
b. The ERA for services will be the Bank of Canada rate on the last business day of the month for which the services were performed.
c. The ERA for advance payments will be the Bank of Canada rate on the last business day prior to the payment. The last published business day rate will be used for non-business days.

4. The Contractor must indicate the total exchange rate adjustment amounts (whether they are upward, downward or present no change) as a separate item on each invoice or claim for payment submitted under the Contract. Where an adjustment applies, the Contractor must submit with their invoice form PWGSC-TPSGC 450, Claim for Exchange Rate Adjustments.

5. The exchange rate adjustment will only impact the payment to be made by Canada where the exchange rate fluctuation is greater than 2% (increase or decrease), calculated in accordance with column 8 of form PWGSC-TPSGC 450 (that is [i_1 - i_0) / i_0]).

6. Canada reserves the right to audit any revision to costs and prices under this clause.

6.7 Invoicing Instructions

1. The Contractor must submit invoices in accordance with the section entitled "Invoice Submission" of the general conditions. Invoices cannot be submitted until all work identified in the invoice is completed.

   Each invoice must be supported by:
   a. a copy of the release document and any other documents as specified in the Contract;

2. Invoices must be distributed as follows:

   a. The original and one (1) copy must be forwarded to the address shown on page 1 of the Contract for certification and payment.

b. One (1) copy must be forwarded to the Contracting Authority identified under the section entitled "Authorities" of the Contract.

6.8 Certifications and Additional Information

6.8.1 Compliance

Unless specified otherwise, the continuous compliance with the certifications provided by the Contractor in its bid or precedent to contract award, and the ongoing cooperation in providing additional information are conditions of the Contract and failure to comply will constitute the Contractor in default. Certifications are subject to verification by Canada during the entire period of the Contract.

6.9 Applicable Laws

The Contract must be interpreted and governed, and the relations between the parties determined, by the laws in force in _____ _____. (*The name of the province will be identified at Contract Award as specified by the Bidder in its bid, if applicable*).

6.10 Priority of Documents

If there is a discrepancy between the wording of any documents that appear on the list, the wording of the document that first appears on the list has priority over the wording of any document that subsequently appears on the list.

(a) the Articles of Agreement;
(b) the general conditions 2010A (2018-06-21) General Conditions - Goods (Medium Complexity);
(c) Annex A, Statement of Requirement; and
(d) The Contractor's bid dated _____: ***To be inserted at contract award***

6.11 *SACC Manual* Clauses

B1505C (2016-01-28), Shipment of Dangerous Goods/Hazardous Products;
D3014C (2007-11-30), Transportation of Dangerous Goods/Hazardous Products;
D3015C (2014-09-25), Dangerous Goods / Hazardous Products - Labelling and Packaging Compliance;
B7500C (2006-06-16), Excess Goods

ANNEX "A"

STATEMENT OF REQUIREMENT

(***Separately attached***)

ANNEX "B"

BASIS OF PAYMENT

1.0 Basis of Payment

For Work performed in accordance with the Contract, the Contractor will be paid firm price(s) Delivered Duty Paid (DDP) Incoterm 2010, at CCG Bases. Canadian customs duties and excise taxes included and Applicable Taxes extra, as follow:

Prices in Canadian dollars ($CAD)				
Part A - Initial requirements, First 2 shipsets				
Item No.	**Description**	**CCG Base**	**planned Date**	**Price**
A1	One complete shipset as detailed in Annex "A" for CCGS Ann Harvey	St. John's, NL	October 15th, 2018	___CAD$
A2	One complete shipset as detailed in Annex "A" for CCGS Georges R Pearkes	St. John's, NL	October 15th, 2018	____CAD$

to be completed at contract award by Contracting Authority

Prices in Canadian dollars ($CAD)				
Part B - Optional requirements, 5 additional shipsets				
Item No.	**Description**	**CCG Base**	**planned Date**	**Price**
B1	One complete shipset as detailed in Annex "A" for CCGS Sir William Alexander	Halifax, NS		____CAD$
B2	One complete shipset as detailed in Annex "A" for CCGS Edward Cornwallis	Halifax, NS		____CAD$
B3	One complete shipset as detailed in Annex "A" for CCGS Sir Wilfrid Laurier	Victoria, BC		____CAD$
B4	One complete shipset as detailed in Annex "A" for CCGS Henry Larsen	St. John's, NL		____CAD$
B5	One complete shipset as detailed in Annex "A" for CCGS Leonard J. Cowley	St. John's, NL		____CAD$

ANNEX “C” to PART 3 OF THE BID SOLICITATION

ELECTRONIC PAYMENT INSTRUMENTS

The Bidder accepts any of the following Electronic Payment Instrument(s):

( ) Visa Acquisition Card;
( ) MasterCard Acquisition Card;
( ) Direct Deposit (Domestic and International);
( ) Electronic Data Interchange (EDI);
( ) Wire Transfer (International Only);
( ) Large Value Transfer System (LVTS) (Over $25M)

ANNEX "D"

EVALUATION PLAN

1.0 Evaluation plan

1.1 Mandatory Technical Criteria

All mandatory technical criteria described at paragraph 2.0 must be met in order to be technically compliant. The Bidder must submit the supporting documentation required in accordance with this requirement.

1.2 Financial Evaluation Criteria

In order to be receivable all the boxes provided for prices or costs of the financial evaluation form must be properly filled in.

The financial evaluation criteria are described at paragraph 3.0 of this annex.

2.0 Mandatory Technical Criteria

In order to properly demonstrate compliance the Bidder must complete the table below and provide full details of where, when (month and year), the systems Supplied/Commissioned/ Certified (manufacturer and model) and provide a brief description of the work performed in their bid.

The mandatory technical criteria to be met by bidder are described in the following table:

No.	Mandatory Technical Criteria	Meets requirement – Y/N	Description (How the Bidder demonstrates compliance with the criterion (when applicable)	Bidder Proposal Reference (page #, section)
1	The bidder must be an experienced supplier of marine fire-fighting equipment.		The bidder must provide a proof of being a supplier in that field of expertise for at least 3 years.	
2	The bidder must have supplied and successfully commissioned at least one similar marine fire-fighting system for aircraft or helicopter hangar in the last five (5) years period.		The bidder must provide the proof of compliance by submitting the details (project/costumer's name, system type/size and the date of commissioning).	
3	If Equivalent Products: The Bidder must provide equipment design and construction that meet the rules of NFPA (National Fire Protection Association) including the ASME (American Society of Mechanical Engineers) code for the under pressure vessel.		If Equivalent Products: The Bidder must provide the details and references from the manufacturer mentioning that rules of NFPA applies to the design and construction of proposed twin agent and foam systems.	
4	If Equivalent Products: Maximum dimensions for the twin agent		The bidder must provide the dimensions and proof of compliance by submitting the	

No.	Mandatory Technical Criteria	Meets requirement – Y/N	Description (How the Bidder demonstrates compliance with the criterion (when applicable)	Bidder Proposal Reference (page #, section)
	system must not exceed H x W x D; 65'' x 50'' x 98''.		drawings and specification sheets.	
5	If Equivalent Products: Maximum dimensions for the foam system must not exceed H x W x D 65'' x 50'' x 50''.		The bidder must provide the dimensions and proof of compliance by submitting the drawings and specification sheets.	
6	If Equivalent Products: The foam system must work with the 120 psi operational pressure, ship's fire main 2 inches pipe supply, with minimum flow 150 gpm at the monitor and 60 gpm with the handgun.		The bidder must provide the pressure, diameter of the pipe connections, flow and proof of compliance by submitting the drawings, manuals and specification sheets.	
7	Length of hoses on each system (twin agent and foam systems) must be 100 feet.		The bidder must provide the length and proof of compliance by submitting the drawings, manuals and specification sheets.	
8	If Equivalent Products: the bid must meet all the mandatory performance criteria detailed in Annex "A", statement of Requirement paragraph 3.2.1 and 3.3.1.		The bidder must provide the proof of compliance by submitting the drawings, manuals and specification sheets.	
9	The Bidder must be able to provide a certified local technician upon request of CCG for commissioning, maintenance and training within seventy-two (72) hours.		The bidder must provide a statement in which he commits to meet this requirement during the course of an eventual contract resulting from this bid submission.	

3.0 Financial Evaluation

3.1 Financial Evaluation Criteria

The financial evaluation criteria are shown in the following table, named Financial Bid Presentation Sheet.

In order to present a receivable bid for the financial evaluation, all cells provided for prices or costs in the below Financial Bid Presentation Sheet must be properly filled in. All amounts should be provided in Canadian dollars ($CAD) only, DDP Delivered Duty Paid at CCG bases, Incoterms 2010. Canadian customs duties and excise taxes included and Applicable Taxes extra.

The sum of the sub-totals shown in the Financial Bid Presentation Sheet will constitutes the basis of the financial evaluation.

3.1-A Financial Evaluation for Initial requirements - CCGS Ann Harvey & CCGS Georges R Pearkes

Shipsets Prices in Canadian dollars only ($CAD)						
Part A - Initial requirements for first 2 ships						
Item No.	**CCGS Name**	**Base**	**planned Date**	**Price per Shipset**	**Qty.**	**Extended Price**
A1	One complete shipset as detailed in Annex “A” for CCGS Ann Harvey	St. John’s, NL	October 15th, 2018	___CAD$	1 shipset	___CAD$
A2	One complete shipset as detailed in Annex “A” for CCGS Georges R Pearkes	St. John’s, NL	October 15th, 2018	____CAD$	1 shipset	___CAD$
(A) Sub-total for Initial part of the requirement (for the first 2 ships)						___CAD$

3.1-B Financial Evaluation for the Options - 5 additional CCG Vessels

Part B - Optional requirements for 5 additional ships						
Item No.	**CCGS Name**	**Base**	**planned Date**	**Price per Shipset**	**Qty.**	**Extended Price**
B1	One complete shipset as detailed in Annex “A” for CCGS Sir William Alexander	Halifax, NS	Nov. 30th 2018	____CAD$	1 shipset	____CAD$
B2	One complete shipset as detailed in Annex “A” for CCGS Edward Cornwallis	Halifax, NS	Nov. 30th 2018	____CAD$	1 shipset	____CAD$
B3	One complete shipset as detailed in Annex “A” for CCGS Sir Wilfrid Laurier	Victoria, BC	Nov. 30th 2019	____CAD$	1 shipset	____CAD$
B4	One complete shipset as detailed in Annex “A” for CCGS Henry Larsen	St. John’s, NL	Jan 30th, 2019	____CAD$	1 shipset	____CAD$
B5	One complete shipset as detailed in Annex “A” for CCGS Leonard J. Cowley	St. John’s, NL	Jan 30th, 2020	____CAD$	1 shipset	____CAD$
(B) Sub-total for Optional part of the requirement (for 5 additional ships)						____CAD$

3.1-C Firm price of the bid - The sum of the sub-totals

TOTAL EVALUATED PRICE	**(C) = (A) + (B)**	____CAD$

The above evaluation tables and prices are only estimations for the financial evaluation purpose and are not to be considered in any way as a commitment from Canada.

Canada offers Exchange rate fluctuation adjustment for the optional requirements.

The responsive bid with the lowest total evaluated price will be recommended for award of a contract.

ANNEX "A"

STATEMENT OF REQUIREMENT

Table of Contents

Table of Charts, Figures and Tables

Part 1: Objective and background

Objective

1.1 The statement of requirements is for the supply of (2) approved replacement marine fire-fighting equipment (shipset[1]) to cover the helicopter hanger and pad operations for both CCG vessels Ann Harvey and George R Pearkes.

1.2 In addition, the Contractor shall provide option for five (5) additional approved Shipsets for a period of 36 months from the time of contract award.

Background

1.3 The recommended equipment is already is use on several coast guard ship's, as a major safety equipment it is highly recommended to standardize it on other ships. The equipment is simple, easy to understand, maintain and use for the crew. Frequent training is given to have an instant reaction of the crew, and as crew move from time on other ships, standardization makes it familiar for the crew.

1.4 Terminology & Abbreviations:

Table 1: Abbreviations

Acronym	Full spelling
CA	Contract Authority (PWGSC)
CCG	Canadian Coast Guard
CCGS	Canadian Coast Guard Ship
CLC	Canada Labour Code
CSA	Canadian Standards Association
CSM	Contractor Supplied Material
DFO	Department of Fisheries and Oceans
FSR	Field Service Representative
FSSM	Fleet Safety & Security Manual (CCG)
GSM	Government Supplied Materials
HC	Health Canada
HMI	Human Machine Interface
IEEE	Institute of Electrical and Electronic Engineers
LOA	Length Over All
MSDS	Material Safety Data Sheet
OHS	Occupational Health and Safety
PCS	Propulsion Control System
PPE	Personal Protective Equipment

[1] *Each Shipset embraces several equipment and deliverable sets detailed in Table (2) of this Annex; Shipset components.*

Shipset	detailed in Shipset components table of Part 5
SSMS	Safety & Security Management System
TA	Technical Authority – Owner's Representative (CCG)
TBS	Treasury Board of Canada Secretariat
TCMS	Transport Canada Marine Safety
TI	Inspection Authority – Technical Inspector (CCG)
WHMIS	Workplace Hazardous Material Information System

Part 2: Reference documents

2.1 The equipment design and construction must meet the rules of NFPA (National Fire Protection Association) including the ASME (American Society of Mechanical Engineers) code for the under pressure vessel.

2.2 The propose fire-fighting systems package must take into account the standards, rules and regulation of the following marine authorities as far as applicable and practicable:

- **a)** IMO regulations, resolutions and amendments, as far as compulsory for this vessel
- **b)** International Convention for the Safety of Life At Sea with amendments (SOLAS)
- **c)** Canada Shipping Act, 2001 Marine Machinery Regulation or USCG marine safety equipment standard.
- **d)** NFPA-2001- Standard for Clean Agent Fire Extinguishing Systems latest edition;
- **e)** Design, installation and maintenance practices as set forth by the equipment manufacturer.
- **f)** Marine Occupational Safety and Health Regulations (statutory regulation)

Part 3: Requirements

Scope of work

3.1 The request is to supply one complete skid mounted twin agent system « Fire Combat Model 13028, 450 PKP/100 AFFF twin agent **or equivalent**», and one complete foam system « Minute Man II, model 150/603 **or equivalent** » per ship.

3.2 The Twin agent system description:

Fire Combat's twin agent units **or equivalent** are double-duty fire-fighting systems. They combine dry chemical agents for rapid flame knock down and aqueous film forming foam (AFFF) for securing the fire area. The units carries 450 pounds of Purple K dry chemicals and 100 US gallons (378.5 L) of pre-mix water with 3% AFFF foam concentrate. Rugged construction: hardened stainless steel components, corrosion-resistant hoses, brass fittings. Polyester hose jackets guard against snagging on corners, gratings, etc.

These portable fire suppression systems are fully self-contained, with the agent containers, actuator, expellant gas, agent lines, hose storage, and nozzle discharge device all in a single unit. Their compact, skid-mounted design allows for easy field placement.

The twin agent fire suppression systems are easy to maintain, fully field rechargeable, and designed for use by a single operator for swift first-response situations.

See Appendix "I" & Appendix "III" to this Annex for more details.

3.2.1 Mandatory performance criteria for Twin agent system:

a) The equipment design and construction must meet the rules of NFPA (National Fire Protection Association) including the ASME (American Society of Mechanical Engineers) code for the under pressure vessel.
b) System must be self-sufficient, mounted on a steel frame skid supporting all component;
c) System must be supplied with nitrogen cylinders already filled;
d) System must have a capacity of 450 pounds of Purple K or equivalent dry chemical and already filled in one reservoir, and have a capacity of 100 US gallons pre-mix water/foam 3% AFFF in the other reservoir, with foam supplied only in separate original manufacturer pail;
e) System must have a 100 feet double hose system with handgun nozzle and hose reel;
f) Flow rate, system must be capable to be emptied within 120 seconds;
g) Maximum dimensions for the system H x W x D; 65'' x 50'' x 98''

3.3 The Foam system description:

The Minute Man II or equivalent is a compact unit, with a 60 US gallons tank of 3% AFFF foam concentrate, with a sets of 1/4 turn valves to operate the adjustable fixe foam monitor or the hand line hose reel. A 2"pipe, flanged 4 bolt connection is requested on the system to be able to connect at the ship fire hydrant system.

3.3.1 Mandatory performance criteria for Foam system:

a) The equipment design and construction must meet the rules of NFPA (National Fire Protection Association) including the ASME (American Society of Mechanical Engineers) code for the under pressure vessel.

b) System must include an adjustable fixe monitor, and another exit with a 100 feet hose with a handgun nozzle and hose reel

c) System must have steel tank capacity of 60 US AFFF 3% foam, with foam supplied only in separate original manufacturer pails to fill the unit;

d) System must work with the 120 psi operational pressure, ship's fire main 2 inches pipe supply, with minimum flow 150 gpm at the monitor and 60 gpm with the handgun;

e) Maximum dimensions for the system H x W x D 65'' x 50'' x 50''

3.4 Both systems are to be supplied with the following:

3.4.1 Length of hoses on each system, 100 feet, with hydrostatic test certificates;

3.4.2 Original manufacturers fabrication shop tests results and / or shop QA certificate of units;

3.4.3 Three (3) copies of English and / or French manuals (paper) of operation and maintenance of both systems; and

3.5 Additional 200 liters of 3% AFFF foam recharge for Minute Man system or equivalent, in pail of 20 liters to the amount of filling the tank. See Appendix "II" & Appendix "III" to this Annex for more details.

Part 4: Proof of Performance

4.1 Unless specified otherwise, all supplied components, materials and installations shall be adequate to meet the following minimum and maximum service conditions:

4.1.1 Helicopter hangar air temperature of 0 ^{0}C to +40 ^{0}C;
4.1.2 Ship's rolling up to 30° and with occasional heavy pitching ;
4.1.3 Vibrations due to icebreaking or/and ship's maneuver;
4.1.4 Beaufort Sea State of 1 up to 8.

4.2 Unless noted otherwise, all new components of the equipment are to be marine approved to ensure long-lasting protection against corrosion in a salt-water industrial marine environment.

Part 5: Delivery Requirements

Deliverables for this request are 2 initial shipsets and 5 optional shipsets, each shipset includes 3 sets of deliverable items listed in the following table:

Table 2: Shipset components

Shipset components (Required fire-fighting equipment and accessories for each ship)		
Item	**Deliverable sets**	**Qty. & Unit**
1	Fire Combat Model 13028, 450 PKP/100 AFFF twin agent **or equivalent**, 100 feet certified hose, Handguns and other accessories as detailed in paragraph 3.2 of ANNEX "A" and its Appendix "I" (requested manuals and certifications included)	1 deliverable set
2	Minute Man II **or equivalent** including 60 US gallon of 3% AFFF, 1/4 turn valves , and 2" 4 bolts flanged pipe connection, , 100 feet certified hose, Handguns and other accessories as detailed in paragraph 3.3 of ANNEX "A" and its Appendix "II" (requested manuals and certifications included)	1 deliverable set
3	200 liters of 3% AFFF foam recharge for Minute Man system **or equivalent**, in pail of 20 liters as detailed in paragraph 3.5 of ANNEX "A" and its Appendix "III"	10 pail

5.1 The Contractor shall deliver Two (2) shipsets for the CCGS Ann Harvey and Georges R. Pearkes to regional depot in St-John's, NL by October 15th, 2018. As mentioned in the table below:

Table 3: Initial 2 shipsets

Shipset No.	CCGS Name	Base	planned Date
1	Ann Harvey	St. John's, NL	Oct. 15th, 2018
2	Georges R Pearkes	St. John's, NL	Oct. 15th, 2018

5.2 The Contractor shall deliver upon request 5 additional shipset (optional) to regional depot of the mentioned CCG Bases in the following table:

Table 4: optional 5 shipsets

Shipset No.	CCGS Name	Base	planned Date
3	Sir William Alexander	Halifax, NS	Nov. 30th 2018
4	Edward Cornwallis	Halifax, NS	Nov. 30th 2018
5	Sir Wilfrid Laurier	Victoria, BC	Nov. 30th 2019
6	Henry Larsen	St. John's, NL	Jan 30th, 2019
7	Leonard J. Cowley	St. John's, NL	Jan 30th, 2020

Appendix "I"

FireCombat system **or equivalent** Specification, Dimensions & Drawings

FireCombat

A DIVISION OF SENSOR ELECTRONICS CORP.

FIRE SUPPRESSION/SECURING SYSTEMS

MODEL 13028
450 PKP/100 AFFF
TWIN AGENT SYSTEM
With Pneumatic Actuation Option Notes

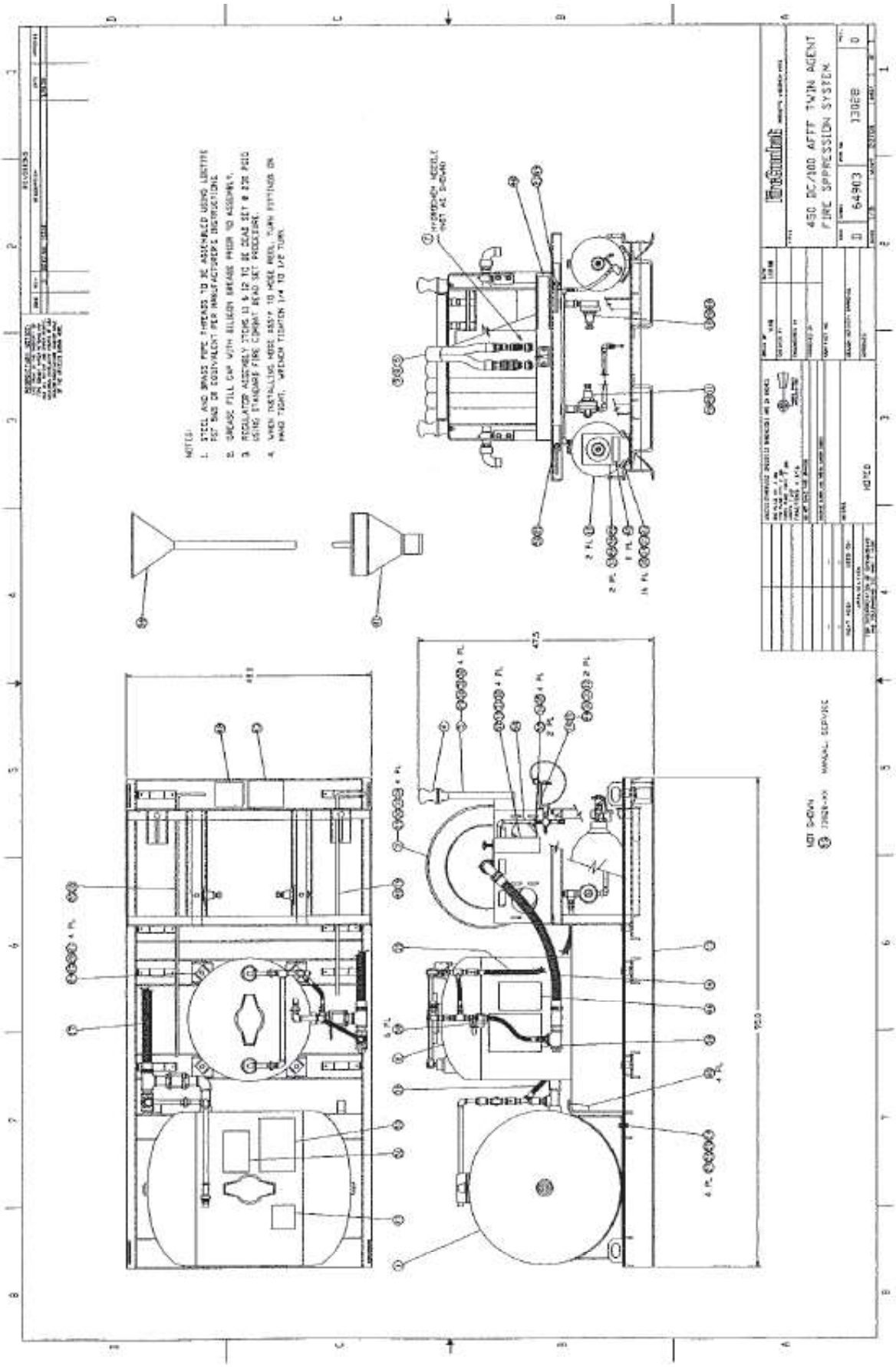
450 DC/100 AFFF TWIN AGENT
FIRE SUPPRESSION SYSTEM
64903
13028
NOTES:
1. STEEL AND BRASS PIPE THREADS TO BE ASSEMBLED USING LOCTITE
PST 565 OR EQUIVALENT PER MANUFACTURER'S INSTRUCTIONS.
2. GREASE FILL CAP WITH SILICON GREASE PRIOR TO ASSEMBLY.
3. REGULATOR ASSEMBLY TORQUE IS 6-12 TO BE SEAT SET @ 220 PSIG
USING STANDARD FIRE COMPANY BENCH SET PROCEDURE.
4. WHEN INSTALLING HOSE ASSY TO HOSE REEL, TURN FITTINGS ON
HAND TIGHT, WRENCH TIGHTEN 1/4 TO 1/2 TURN.
NOT SHOWN
MANUAL SERVICE

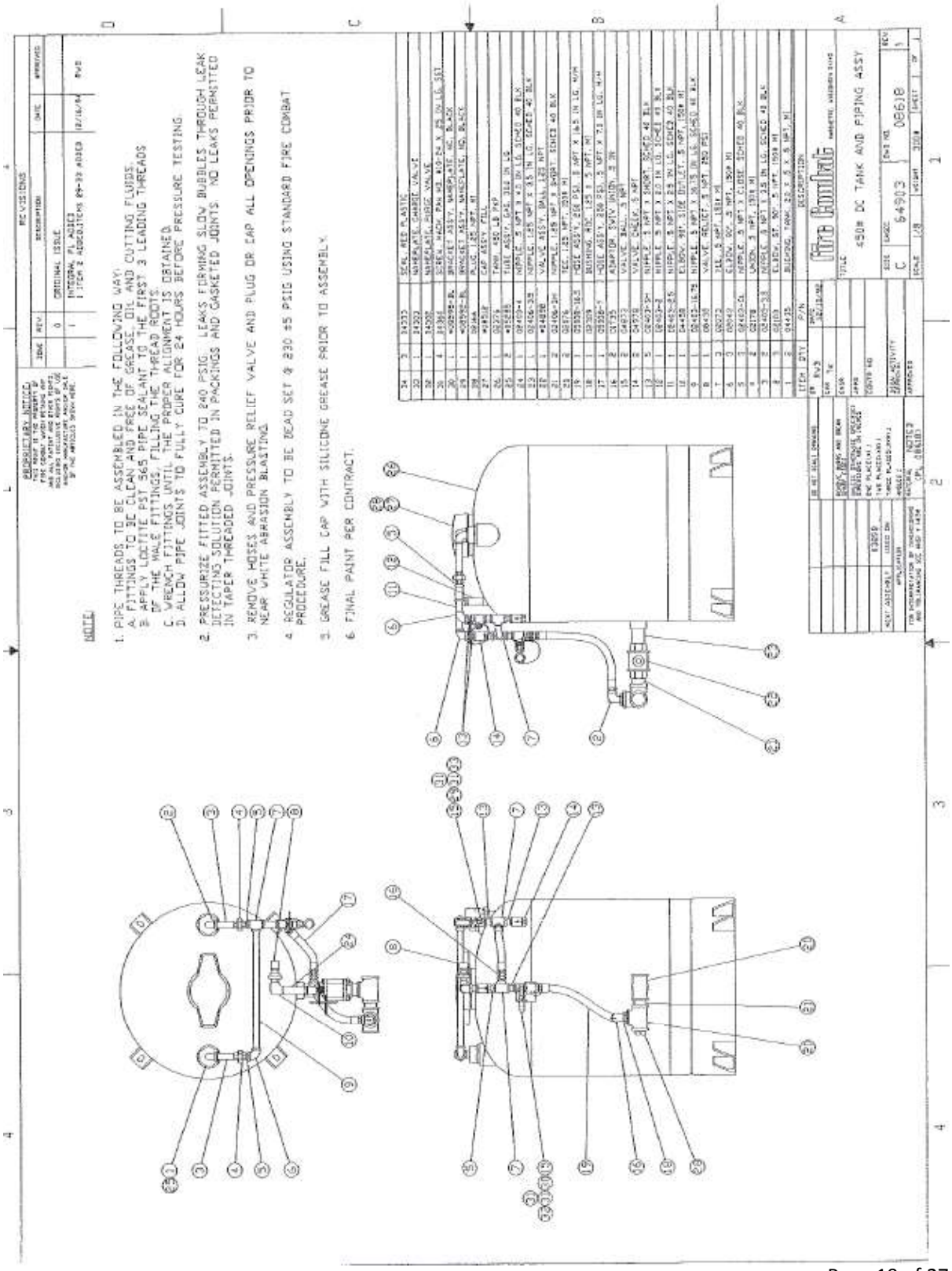
NOTE:
1. PIPE THREADS TO BE ASSEMBLED IN THE FOLLOWING WAY:
A. FITTINGS TO BE CLEAN AND FREE OF GREASE, OIL AND CUTTING FLUIDS.
B. APPLY LOCTITE PST 565 PIPE SEALANT TO THE FIRST 3 LEADING THREADS OF THE MALE FITTINGS, FILLING THE THREAD ROOTS.
C. WRENCH FITTINGS UNTIL THE PROPER ALIGNMENT IS OBTAINED.
D. ALLOW PIPE JOINTS TO FULLY CURE FOR 24 HOURS BEFORE PRESSURE TESTING.
2. PRESSURIZE FITTED ASSEMBLY TO 240 PSIG. LEAKS FORMING SLOW BUBBLES THROUGH LEAK DETECTING SOLUTION PERMITTED IN PACKINGS AND GASKETED JOINTS. NO LEAKS PERMITTED IN TAPER THREADED JOINTS.
3. REMOVE HOSES AND PRESSURE RELIEF VALVE AND PLUG OR CAP ALL OPENINGS PRIOR TO NEAR WHITE ABRASION BLASTING.
4. REGULATOR ASSEMBLY TO BE DEAD SET @ 230 ±5 PSIG USING STANDARD FIRE COMBAT PROCEDURE.
5. GREASE FILL CAP WITH SILICONE GREASE PRIOR TO ASSEMBLY.
6. FINAL PAINT PER CONTRACT.
REVISIONS
ORIGINAL ISSUE
INTEGRAL FILADED
ITEM 2 ADDED/ITEMS 24-33 ADDED
PROPRIETARY NOTICE
Fire Combat
450# DC TANK AND PIPING ASSY
C
64903
06618

6% AFFF REFILL TABLE
100 GALLON (378.5L) TANK

The Quantity of AFFF (Aqueous Film Forming Foam) 6% concentrate and water required for a partial refill can be determined by completing the following steps:

1. Make certain that the system is level.
2. Remove the fill cap.
3. Measuring the distance from the Top of the Fill Opening collar to the surface of the remaining Liquid in the tank and add the Noted AFFF and Water.

Distance from top of Fill Opening collar to surface of Liquid.		**6% AFFF** to Add		**WATER** to Add	
(Inches)	(cm)	(Gallons)	(Liters)	(Gallons)	(Liters)
4.50	11.4	0.00	0.0	0.00	0.00
7.00	17.8	0.50	1.9	8.0	30.3
9.25	23.5	1.00	3.8	15.5	58.7
11.50	29.2	1.50	5.7	23.5	88.9
13.50	34.1	2.00	7.6	31.0	117.3
15.50	39.3	2.50	9.5	39.0	147.6
17.00	43.2	3.00	11.4	47.0	177.9
18.50	47.0	3.50	13.2	55.0	208.2
20.50	52.1	4.00	15.1	63.0	238.5
22.50	57.2	4.50	17.0	70.5	266.8
24.75	62.9	5.00	18.9	78.0	295.3
27.00	68.6	5.50	20.8	86.0	325.5
31.25	79.4	6.00	22.7	94.0	355.8

TABLE B

Appendix "II"

MINUTEMAN II system **or equivalent** Specification, Dimensions & Drawings

'MINUTEMAN II'
FOAM HOSE REEL STATION
MODEL 150&225/603, /953, /606 & /956

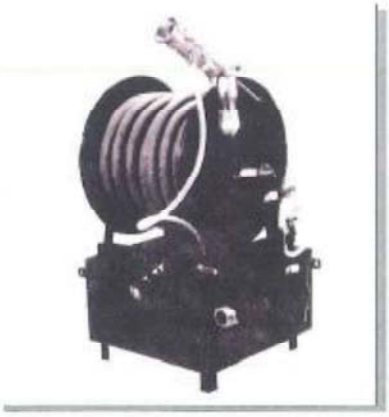

INSTALLATION, OPERATION
& MAINTENANCE MANUAL

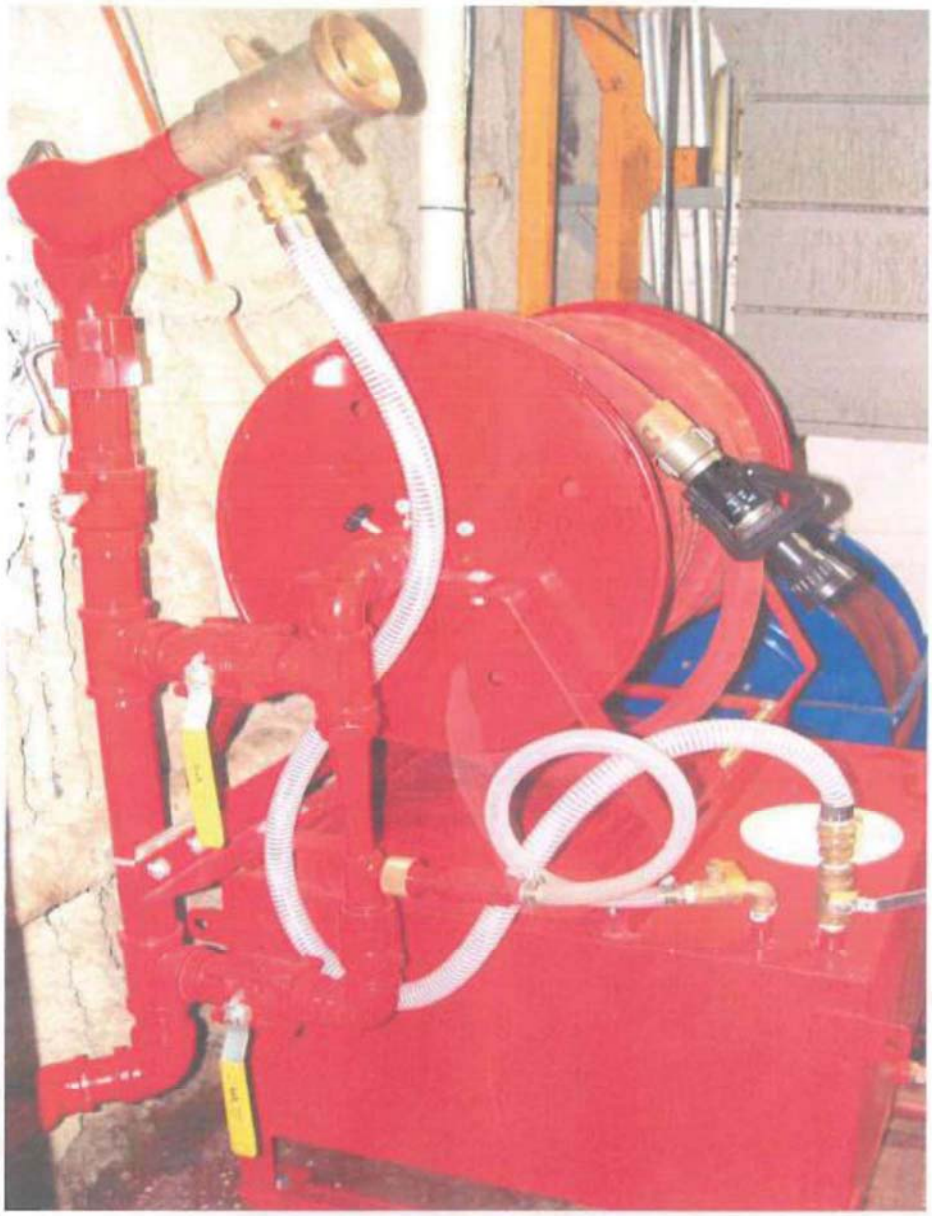

Système d'extinction hangar d'hélicoptère
Minuteman II model 150

'MINUTEMAN II' FOAM HOSE REEL STATION MODEL 150&225/603, /953, /606 & /956

2. INTRODUCTION

The Spectrum 'Minuteman II' Hose Reel Station proportioning and delivery system combines the proven performance and reliability of eductor technology with a simplified design that provides ease of operation for fire fighting personnel. The fundamental and field-proven design maximizes reliability during operation. This proven technology is currently used throughout the world to protect fleet aircraft for government and industry as well as tank farm and process facilities for the hydrocarbon and petrochemical industries.

a. This Spectrum 'Minuteman II' Hose Reel Station with Low Flow Hydro-Foam Monitor manual has been prepared as a reference guide for the new as well as experienced hose reel station operator. Read this manual and all other equipment manuals before attempting to operate the system.

b. The Spectrum 'Minuteman II' Hose Reel Station with Low Flow Hydro-Foam Monitor is engineered for dependability under specific operating conditions. The principles presented in this manual are limited to the facts related directly to the operation of this appliance, while the responsibility for the proper application of these principles belongs to the operator.

c. Fire Protection personnel efficiency can be maintained by periodically reviewing the manual information, and by holding regular operational practice drills.

d. Operator safety, and safety of all personnel around the unit depends on the operators care and judgment when operating or maintaining the unit.

All information and specifications contained in this manual are based on the latest information available at the time of printing. Illustrations are intended for reference use only.

'MINUTEMAN II'
FOAM HOSE REEL STATION
MODEL 150&225/603, /953, /606 & /956

3. SYSTEM OVERVIEW

Model #	150/603	150/953	150/606	150/956	225/603	225/953	225/606	225/956
Hand line Flow @ 150 psi	60 gpm	95 gpm	60 gpm	95 gpm	60 gpm	95 gpm	60 gpm	95 gpm
Monitor Flow @ 100 psi	150 gpm	150 gpm	150 gpm	150 gpm	225 gpm	225 gpm	225 gpm	225 gpm
Proportioning Rate	3%		6%		3%		6%	

The Spectrum 'Minuteman II' Hose Reel Station with Low Flow Hydro-Foam Monitor features the following major components:

1) 60 US gallon stainless steel storage tank w/6" fill & ¾" vacuum relief vent
2) Manual rewind continuous flow hose reel
3) 100' x 1½" hose w/1½" FNH swivel and 1½" MNH rigid couplings
4) Williams 30-125 USGPM "Viper" hand line nozzle w/1½" FNH swivel inlet (standard – other nozzles may be utilized to meet a particular specification)
5) Williams 60/95USGPM foam eductor
6) Integral foam supply ball check valve
7) 3% or 6% proportioning metering orifices
8) 1½", ¼ turn water/foam selector valves
9) ¾", ¼ turn foam supply valve
10) 2" Spectrum Mini-Monitor
11) 150/225 USGPM Small Body Hydro-Foam nozzle
12) 2", ¼ turn monitor shut-off valve
13) 1", ¼ turn foam supply valve
14) ¾" tank drain w/hex plug

The hose reel/monitor station is designed for rigid mounting and to provide a minimum hand line water/foam solution discharge rate of 60/95 USGPM @ 150 PSI and monitor water/foam solution discharge rate of 150/225 USGPM @ 100 PSI inlet pressure to the unit. In operation the hose reel station can be used to discharge hand line/monitor water only and 3% or 6% foam solution as determined by various control valve configurations and specific hose reel station model number.

The foam concentrate storage tank features a 6" fill opening w/PVC screw on cap for easy filling and ¾" vacuum relief vent to allow air entry into the tank as the foam concentrate supply depletes during operation.

Hose that is reeled off during operation is returned on the reel by use of a manual crank handle supplied with the hose reel station.

Dual 1½", ¼ turn water inlet control valves regulate water flow into the eductor/piping system allowing the operator to choose water only or foam solution discharge for hose reel hand line operation. A ¾", ¼ turn foam supply valve assures complete foam supply shut-off for water only operation while a fixed diameter metering orifice plate controls 3% or 6% proportioned foam solution discharge. An integral foam supply ball check valve prevents back-flow of water into the 60 US gallon foam concentrate storage tank in the event the operator fails to close the ¾", ¼ turn foam supply valve during water only discharge operations. This check valve also prevents back-flow of water into the concentrate storage tank during no-flow operation when either the 1½", ¼ turn water or foam inlet control valves are open and the Viper hand line nozzle is closed. A ¾" FNPT tank drain w/hex plug is provided for draining and/or flushing of the foam concentrate storage tank.

A single 2", ¼ turn water inlet control valve regulates water flow to the 2" Low Flow Hydro-Foam Mini-Monitor. A 1", ¼ turn foam supply valve assures complete foam supply shut-off for water only operation while a fixed diameter metering orifice plate within the nozzle foam inlet port controls 3%/6% proportioned foam solution discharge. As with the hose reel hand line, an integral foam supply ball check valve prevents back-flow of water into the 60 US gallon foam concentrate storage tank through the foam concentrate pick-up hose.

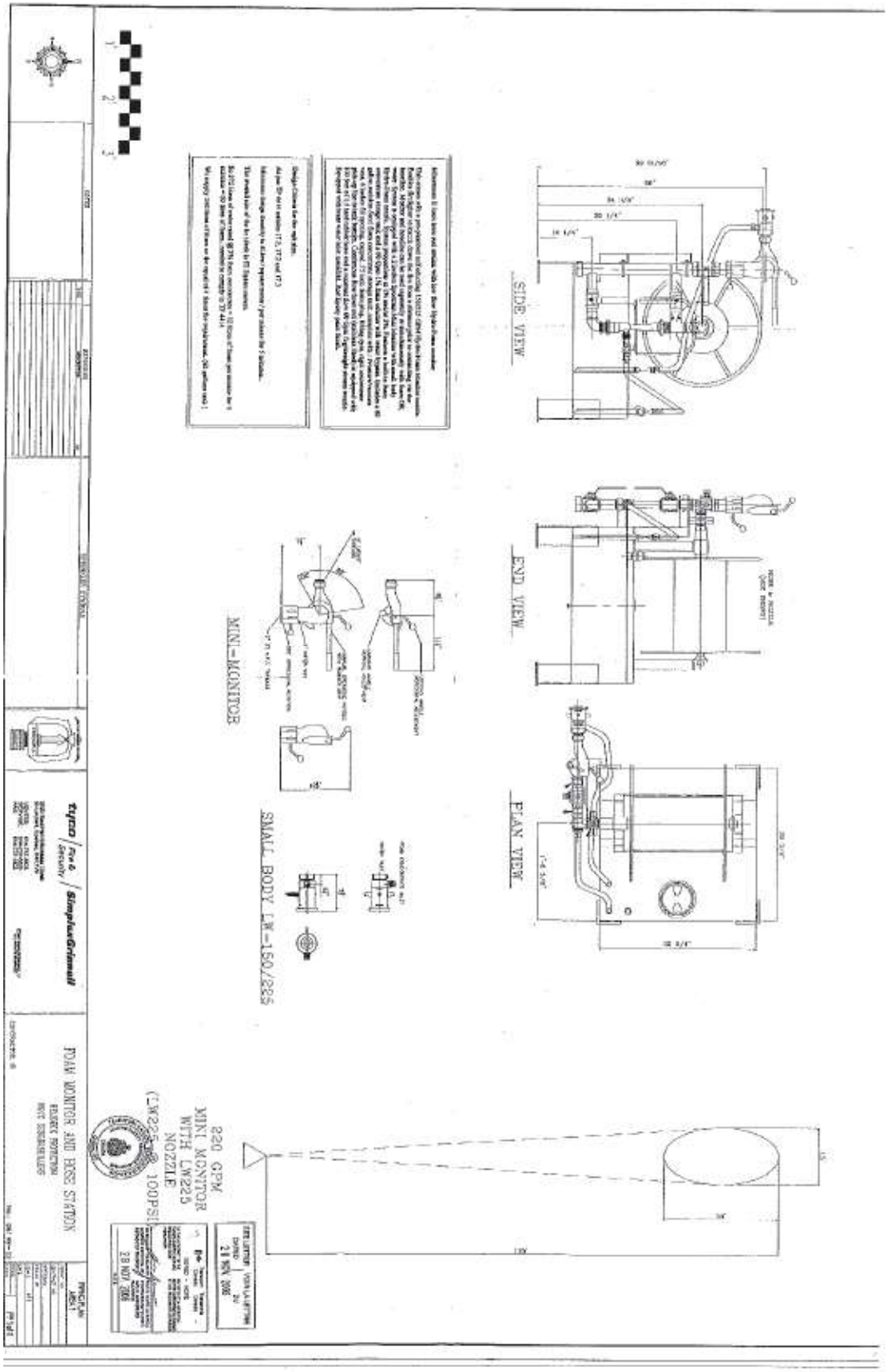
SIDE VIEW
END VIEW
PLAN VIEW
MINI-MONITOR
SMALL BODY LW-150/225
220 GPM
MINI MONITOR
WITH LW225
NOZZLE
(LW225)
100PSI
FOAM MONITOR AND HOSE STATION

Appendix "III"

Foam Specification CHEMGUARD **or equivalent**

CHEMGUARD
FIRE SUPPRESSION SOLUTIONS

3% AFFF Foam Concentrate C303

Chemguard 3% AFFF is a specially formulated, synthetic, aqueous film forming foam concentrate. A vapor suppressing aqueous film is formed by the foam solution draining from the expanded foam blanket. It is intended for use at a proportioning rate of 3% (3 parts AFFF concentrate to 97 parts water) on Class B hydrocarbon type fuels such as gasoline, kerosene, diesel, etc. Chemguard 3% AFFF is not intended for use on fuels, which are polar solvent/water miscible such as alcohols, ketones, esters, etc.

FEATURES

- U.L. Listed, Foam Liquid Concentrates
- U.L. recommended application rate on hydrocarbon type fuels is .10/gpm ft².
- U.L. Canada Listed
- Performance to ICAO, Doc. #9137, Part 1, Chapter 8, Level "B" verified
- Suitable for use with fresh or salt water
- Excellent wetting characteristics when used in combating Class "A" fuel fires
- Suitable for use with both aspirating foam and standard water fog nozzles
- Suitable for use with deluge or closed head foam water sprinkler systems
- If inadvertently frozen, thawing will render product completely serviceable again
- Suitable for use with carbon steel, fiberglass, polyethylene or stainless steel. Chemguard 3% AFFF is not compatible with galvanized pipe or fittings in an undiluted form.
- Suitable for use with siliconized dry chemical extinguishing agents

PROPORTIONING

- Fixed or portable in-line eductors
- In-line balanced pressure and pump pressure proportioning skid
- Bladder tank balanced pressure proportioning systems
- Around the pump proportioners
- Handline, air-aspirating nozzles with fixed eductor pickup tube

DISCHARGE DEVICES

- Foam Chambers
- Air-aspirating and non air-aspirating sprinkler heads or spray nozzles
- Standard water fog nozzles for handlines and monitors
- Air-aspirating foam nozzles
- Foam makers for use with either Floating Roof storage tanks or Dike/Bund protection systems
- High back pressure foam makers for sub-surface base injection system (hydrocarbon type fuels only)

APPLICATIONS

- Crash Fire Rescue
- Storage Tanks(non-polar solvent type fuels only)
- Truck/Rail Loading or Unloading Facilities
- Processing/Storage Facilities
- Docks/Marine Tankers
- Flammable Liquid Containment Areas
- Mobile Equipment

FOAMING PROPERTIES

Aspirating type discharge devices typically generate expansion ratios between 6-10 to 1 when 3% AFFF is mixed with water at the correct ratio. Non-aspirating type devices will typically generate expansion ratios of between 2-4 to 1. Expansion ratios are dictated by the type of discharge devices, flow rate and discharge pressure.

CHEMGUARD
204 S. 6th Ave • Mansfield, Tx 76063 • (817) 473-9964 • FAX (817) 473-0606
www.chemguard.com

DATA SHEET #D10D03015R1
REVISION: 10/2008

TYPICAL PROPERTIES AT 77°F (25°C)

Appearance.....Clear Slightly Yellow
Specific Gravity.....1.020
pH.....7.7
Viscosity.....1.5 cps

ENVIRONMENTAL IMPACT

Chemguard 3% AFFF is biodegradable, low in toxicity and can be treated in sewage treatment plants. Please refer to Chemguard Technical Bulletin regarding foam products and the environment.

STORAGE

If kept in the original unopened and airtight Chemguard supplied container and stored within the temperature range of 35°F - 120°F (2°C - 49°C) a shelf life of between 20-25 years can be expected. When stored in other than the manufacturers supplied container, please check with Chemguard for storage guidelines.

ORDERING INFORMATION & WEIGHT

Part No:	Container	Weight
C303P	5-Gallon Pail / 19 Liters	45 lbs.
C303D	55-Gallon Drum / 208 Liters	495 lbs.
C303BD	330-Gallon Tote / 1249 Liters	3000 lbs.

Appendix "IV"

Safety Data Sheet

This safety data sheet complies with the requirements of: 2012 OSHA Hazard Communication Standard (29CFR 1910.1200)

Product name ANSULITE AR-AFFF 3% or 6% Foam Concentrate F-600A

1. Identification

1.1. Product Identifier

Product name ANSULITE AR-AFFF 3% or 6% Foam Concentrate F-600A

1.2. Other means of identification

Product code 437198

Synonyms None **Chemical Family** No information available

1.3. Recommended use of the chemical and restrictions on use

Recommended use Fire extinguishing agent

Uses advised against Consumer use

1.4. Details of the Supplier of the Safety Data Sheet

Company Name Tyco Fire Protection Products
One Stanton Street
Marinette, WI 54143-2542
Telephone: 715-735-7411

Contact point Product Stewardship at 1-715-735-7411

E-mail address psra@tycofp.com

1.5. Emergency Telephone Number

Emergency telephone CHEMTREC 800-424-9300 or 703-527-3887

2. Hazards Identification

Classification

OSHA Regulatory Status

This chemical is considered hazardous by the 2012 OSHA Hazard Communication Standard (29 CFR 1910.1200) **2.2. Label Elements**

The product contains no substances which at their given concentration, are considered to be hazardous to health

Precautionary Statements

2.3. Hazards Not Otherwise Classified (HNOC)

Not Applicable.

2.4. OTHER INFORMATION

Unknown Acute Toxicity 3.78% of the mixture consists of ingredient(s) of unknown toxicity

3. Composition/information on Ingredients

3.1. Mixture

The following component(s) in this product are considered hazardous under applicable OSHA(USA)

Chemical name	CAS No	weight-%
2-(2-Butoxyethoxy)ethanol	112-34-5	5 - 10

4. First aid measures

4.1. Description of first aid measures

Eye Contact Rinse thoroughly with plenty of water for at least 15 minutes, lifting lower and upper eyelids. Consult a physician.

Skin contact Wash skin with soap and water. Get medical attention if irritation develops and persists.

Inhalation Remove to fresh air. If breathing is difficult, give oxygen. (Get medical attention immediately if symptoms occur.).

Ingestion Rinse mouth. Do not induce vomiting without medical advice. If swallowed, call a poison control center or physician immediately.

4.2. Most Important Symptoms and Effects, Both Acute and Delayed

Symptoms No information available.

4.3. Indication of Any Immediate Medical Attention and Special Treatment Needed

Note to physicians Treat symptomatically.

5. Fire-fighting measures

5.1. Suitable Extinguishing Media

Product is extinguishing agent. Use extinguishing measures that are appropriate to local circumstances and the surrounding environment.

5.2. Unsuitable Extinguishing Media None.

5.3. Specific Hazards Arising from the Chemical None known.

Hazardous Combustion Products Carbon oxides, Fluorinated oxides, Nitrogen oxides (NOx), Oxides of sulfur

5.4. Explosion Data

Sensitivity to Mechanical Impact

None. **Sensitivity to Static Discharge**

None.

5.5. Protective Equipment and Precautions for Firefighters

As in any fire, wear self-contained breathing apparatus pressure-demand, MSHA/NIOSH (approved **or equivalent**) and full protective gear.

6. Accidental release measures

6.1. Personal precautions, protective equipment and emergency procedures

Personal Precautions Ensure adequate ventilation, especially in confined areas.

For emergency responders Use personal protection recommended in Section 8.

6.2. Environmental Precautions

Environmental Precautions Prevent further leakage or spillage if safe to do so. Prevent entry into waterways, sewers, basements or confined areas. See Section 12 for additional Ecological Information.

6.3. Methods and material for containment and cleaning up

Methods for Containment Prevent further leakage or spillage if safe to do so.

Methods for Cleaning Up Pick up and transfer to properly labeled containers.

7. Handling and Storage

7.1. Precautions for Safe Handling

Advice on safe handling Avoid contact with skin and eyes. Handle in accordance with good industrial hygiene and safety practice.

7.2. Conditions for safe storage, including any incompatibilities

Storage Conditions Keep containers tightly closed in a dry, cool and well-ventilated place.

Incompatible Materials Strong oxidizing agents. Strong acids. Strong bases.

8. Exposure Controls/Personal Protection

8.1. Control Parameters Exposure guidelines

Chemical name	ACGIH TLV	OSHA PEL	NIOSH IDLH
2-(2-Butoxyethoxy)ethanol 112-34-5	TWA: 10 ppm inhalable fraction and vapor	-	-

ACGIH (American Conference of Governmental Industrial Hygienists) OSHA (Occupational Safety and Health Administration of the US Department of Labor) NIOSH IDLH Immediately Dangerous to Life or Health

8.2. Appropriate Engineering Controls

Engineering controls Showers
Eyewash stations
Ventilation systems.

8.3. Individual protection measures, such as personal protective equipment

Eye/Face Protection Avoid contact with eyes. Tight sealing safety goggles.

Skin and Body Protection Wear protective gloves and protective clothing.

Respiratory Protection If exposure limits are exceeded or irritation is experienced, NIOSH/MSHA approved respiratory protection should be worn. Positive-pressure supplied air respirators may be required for high airborne contaminant concentrations. Respiratory protection must be provided in accordance with current local regulations.

Ventilation Use local exhaust or general dilution ventilation to control exposure with applicable limits

8.4. General hygiene considerations

Do not eat, drink or smoke when using this product. Handle in accordance with good industrial hygiene and safety practice.

9. Physical and Chemical Properties

Color Orange

9.1. Information on basic physical ar properties

Remarks • Method

Physical State	Liquid
Odor	Characteristic
odor threshold	No data available

Property	**VALUES**
pH	No data available
Melting point/freezing point	No data available
Boiling point / boiling range	100 °C / 212 °F
Flash Point	> 100 °C / > 212 °F
Evaporation Rate	No data available
flammability (solid, gas)	No data available
Flammability limit in air	
Upper flammability limit:	No data available
Lower flammability limit:	No data available
Vapor Pressure	No data available
Vapor Density	No data available
Specific gravity	No data available
Water Solubility	No data available
Solubility in Other Solvents	No data available
Partition coefficient	No data available
Autoignition Temperature	No data available
Decomposition Temperature	No data available
Kinematic viscosity	No data available
density	1.02

10. Stability and Reactivity

10.1. Chemical Stability

Stable under recommended storage conditions.

10.2. Reactivity

No data available

10.3. Possibility of hazardous reactions

None under normal processing.

hazardous polymerization Hazardous polymerization does not occur.

10.4. Conditions to Avoid

Extremes of temperature and direct sunlight.

10.5. Incompatible Materials

Strong oxidizing agents. Strong acids. Strong bases.

10.6. Hazardous decomposition products

Carbon oxides. Nitrogen oxides (NOx). Oxides of sulfur. Fluorinated oxides.

11. Toxicological Information

11.1. Information on Likely Routes of Exposure

Product information no data available

INHALATION no data available.

Eye Contact no data available.

Skin contact no data available.

INGESTION no data available.

Acute Toxicity

Chemical name	Oral LD50	dermal LD50	Inhalation LC50
2-(2-Butoxyethoxy)ethanol 112-34-5	= 3384 mg/kg (Rat)	= 2700 mg/kg (Rabbit)	-

11.2. Information on Toxicological Effects

Symptoms No information available.

11.3. Delayed and immediate effects as well as chronic effects from short and long-term exposure

sensitization No information available.
Germ Cell Mutagenicity No information available
carcinogenicity No information available.
Reproductive Toxicity No information available.
STOT - Single Exposure No information available.
STOT - Repeated Exposure No information available.
Aspiration Hazard No information available.

11.4. Numerical Measures of Toxicity - Product information

The following values are calculated based on chapter 3.1 of the GHS document

ATEmix (oral) 33875 mg/kg
ATEmix (dermal) 36585 mg/kg

12. Ecological Information

12.1. ecotoxicity Not classified

0.16% of the mixture consists of components(s) of unknown hazards to the aquatic environment

Chemical name	Algae/aquatic plants	Fish	Crustacea
2-(2-Butoxyethoxy)ethanol 112-34-5	EC50 96 h > 100 mg/L Desmodesmus subspicatus	LC50 96 h = 1300 mg/L Lepomis macrochirus static	EC50 24 h = 2850 mg/L Daphnia magna EC50 48 h > 100 mg/L Daphnia magna
2-Methyl-2,4-pentanediol 107-41-5	-	LC50 96 h 10500 - 11000 mg/L Pimephales promelas flow-through LC50 96 h = 10000 mg/L Lepomis macrochirus static LC50 96 h = 8690 mg/L Pimephales promelas flow-through LC50 96 h = 10700 mg/L Pimephales promelas static	EC50 48 h 2700 - 3700 mg/L Daphnia magna
1,2-Propanediol 57-55-6	EC50 96 h = 19000 mg/L Pseudokirchneriella subcapitata	LC50 96 h = 51600 mg/L Oncorhynchus mykiss static LC50 96 h 41 - 47 mL/L Oncorhynchus mykiss static LC50 96 h = 51400 mg/L Pimephales promelas static LC50 96 h = 710 mg/L Pimephales promelas	EC50 48 h > 1000 mg/L Daphnia magna Static EC50 24 h > 10000 mg/L Daphnia magna

Sodium chloride 7647-14-5	-	LC50 96 h 5560 - 6080 mg/L Lepomis macrochirus flow-through LC50 96 h = 12946 mg/L Lepomis macrochirus static LC50 96 h 6020 - 7070 mg/L Pimephales promelas static LC50 96 h = 7050 mg/L Pimephales promelas semi-static LC50 96 h 6420 - 6700 mg/L Pimephales promelas static LC50 96 h 4747 - 7824 mg/L Oncorhynchus mykiss flow-through	EC50 48 h = 1000 mg/L Daphnia magna EC50 48 h 340.7 - 469.2 mg/L Daphnia magna Static
n-Butanol 71-36-3	EC50 72 h > 500 mg/L Desmodesmus subspicatus EC50 96 h > 500 mg/L Desmodesmus subspicatus	LC50 96 h = 1910000 µg/L Pimephales promelas static LC50 96 h 100000 - 500000 µg/L Lepomis macrochirus static LC50 96 h = 1740 mg/L Pimephales promelas flow-through LC50 96 h 1730 - 1910 mg/L Pimephales promelas static	EC50 48 h = 1983 mg/L Daphnia magna EC50 48 h 1897 - 2072 mg/L Daphnia magna Static
1-Octanol 111-87-5	EC50 48 h = 14 mg/L Desmodesmus subspicatus static	LC50 96 h 11.4 - 12.9 mg/L Pimephales promelas flow-through LC50 96 h = 17.68 mg/L Oncorhynchus mykiss static	EC50 24 h 15 - 26 mg/L Daphnia magna
Formaldehyde 50-00-0	-	LC50 96 h 22.6 - 25.7 mg/L Pimephales promelas flow-through LC50 96 h = 1510 µg/L Lepomis macrochirus static LC50 96 h = 41 mg/L Brachydanio rerio static LC50 96 h 0.032 - 0.226 mL/L Oncorhynchus mykiss flow-through LC50 96 h 100 - 136 mg/L Oncorhynchus mykiss static LC50 96 h 23.2 - 29.7 mg/L Pimephales promelas static	LC50 48 h = 2 mg/L Daphnia magna EC50 48 h 11.3 - 18 mg/L Daphnia magna Static

12.2. Persistence and Degradability No information available.

12.3. Bioaccumulation No information available.

12.4. Other Adverse Effects
No information available

13. Disposal Considerations

13.1. Waste Treatment Methods

Disposal of wastes Disposal should be in accordance with applicable regional, national and local laws and regulations.

Contaminated Packaging Do not reuse container.

14. Transport Information

DOT	NOT REGULATED
TDG	NOT REGULATED
MEX	NOT REGULATED
ICAO (air)	NOT REGULATED
IATA	NOT REGULATED
IMDG	NOT REGULATED

15. Regulatory Information

15.1. International Inventories

TSCA	Complies
DSL/NDSL	Complies
ENCS	Does not comply
IECSC	Does not comply
KECL	Does not comply
PICCS Does not comply **AICS**	Complies

Legend:

TSCA - United States Toxic Substances Control Act Section 8(b) Inventory
DSL/NDSL - Canadian Domestic Substances List/Non-Domestic Substances List
ENCS - Japan Existing and New Chemical Substances
IECSC - China Inventory of Existing Chemical Substances
KECL - Korean Existing and Evaluated Chemical Substances
PICCS - Philippines Inventory of Chemicals and Chemical Substances
AICS - Australian Inventory of Chemical Substances

15.2. US Federal Regulations

SARA 313

Section 313 of Title III of the Superfund Amendments and Reauthorization Act of 1986 (SARA). This product contains a chemical or chemicals which are subject to the reporting requirements of the Act and Title 40 of the Code of Federal Regulations, Part 372

Chemical name	SARA 313 - Threshold Values %
2-(2-Butoxyethoxy)ethanol - 112-34-5	1.0

SARA 311/312 Hazard Categories

Acute Health Hazard	No
Chronic health hazard	No
Fire Hazard	No
Sudden Release of Pressure Hazard	No
Reactive Hazard	No

CWA (Clean Water Act)

This product contains the following substances which are regulated pollutants pursuant to the Clean Water Act (40 CFR 122.21 and 40 CFR 122.42)

CERCLA

This material, as supplied, contains one or more substances regulated as a hazardous substance under the Comprehensive Environmental Response Compensation and Liability Act (CERCLA) (40 CFR 302)

15.3. US State Regulations

California Proposition 65

This product contains the following Proposition 65 chemicals

Chemical name	California Proposition 65
Formaldehyde - 50-00-0	Carcinogen

U.S. State Right-to-Know Regulations

Chemical name	New Jersey	Massachusetts	Pennsylvania
2-(2-Butoxyethoxy)ethanol 112-34-5	X	-	X
n-Butanol 71-36-3	X	X	X
1-Octanol 111-87-5	-	-	X
Formaldehyde 50-00-0	X	X	X

16. Other information, including date of preparation of the last revision

NFPA	**Health Hazards** 0	**flammability** 1	**Instability** 0	**Physical and chemical properties** -
HMIS	**Health Hazards** 0	**flammability** 1	**Physical Hazards** 0	**Personal Protection** X

Revision date 25-May-2015

Revision note

No information available

Disclaimer

The information provided in this Safety Data Sheet is correct to the best of our knowledge, information and belief at the date of its publication. The information given is designed only as a guidance for safe handling, use, processing, storage, transportation, disposal and release and is not to be considered a warranty or quality specification. The information relates only to the specific material designated and may not be valid for such material used in combination with any other materials or in any process, unless specified in the text.

End of Safety Data Sheet