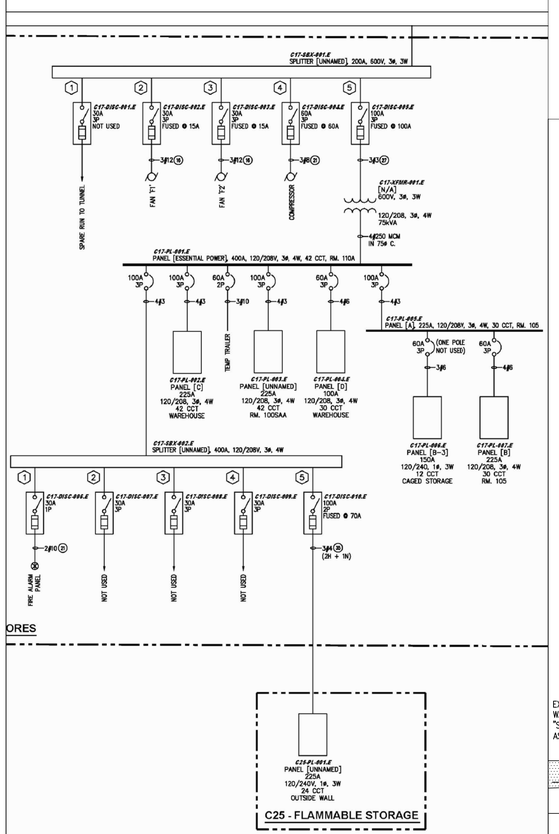

2 E-2 ELECTRICAL – SINGLE LINE DIAGRAM
EXISTING CONDITIONS
NOT TO SCALE

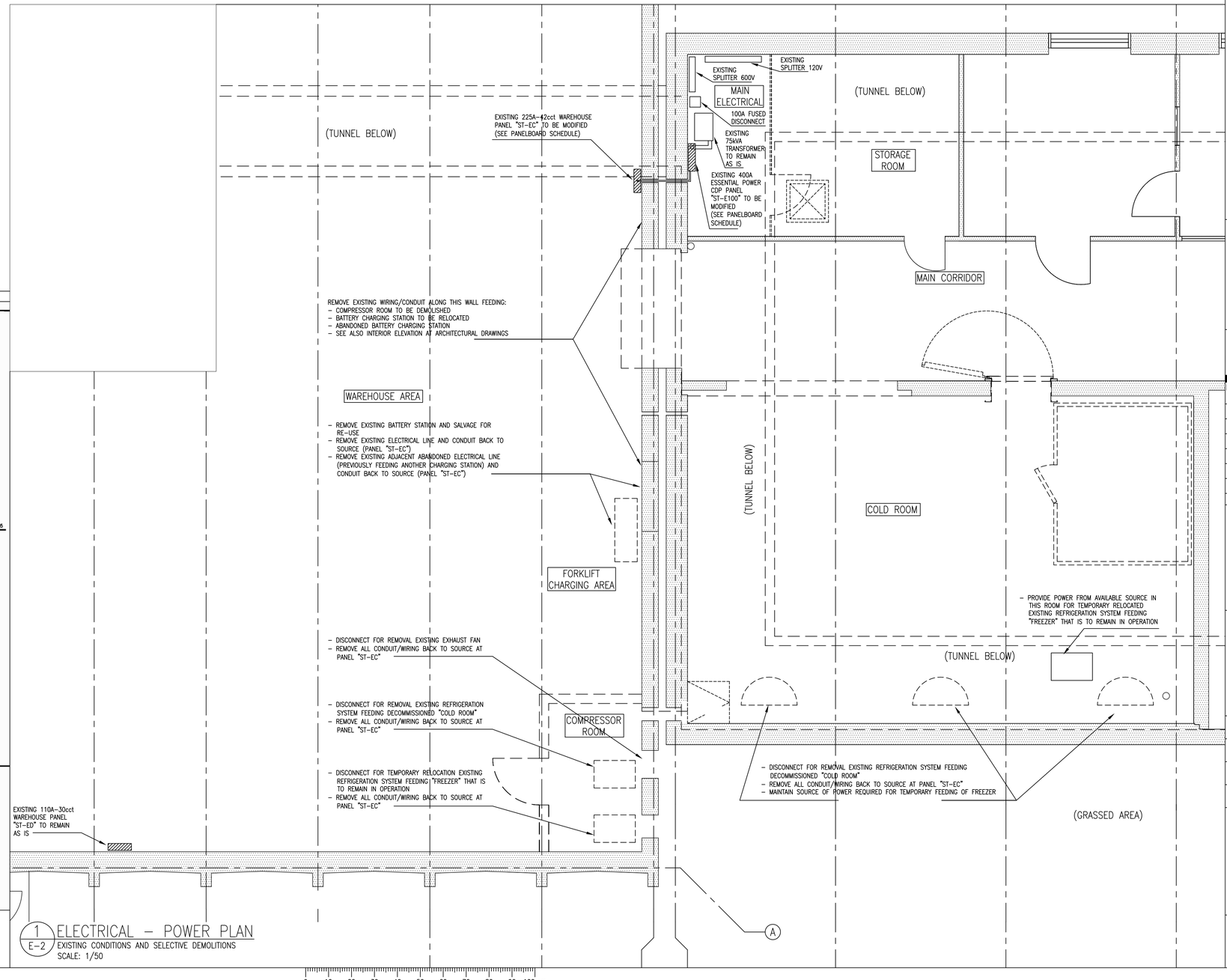

1 E-2 ELECTRICAL – POWER PLAN
EXISTING CONDITIONS AND SELECTIVE DEMOLITIONS
SCALE: 1/50

0 10 20 30 40 50 60 70 80 90 100mm

Public Works and Government Services Canada
Travaux publics et Services gouvernementaux Canada

REAL PROPERTY SERVICES
Western Region
SERVICES IMMOBILIERS
Région de l'ouest

CGM ENGINEERING LTD.
2-472 STRADBROOK AVENUE
WINNIPEG, MB R3L 0J9
(204) 272-3255
JOB: SMI-Fr

Revision	Description	Date
0	ISSUED FOR CONSTRUCTION	2018/05/14

Client / client

CORRECTIONAL SERVICE CANADA (CSC)

Stony Mountain Institution (SMI)
Stony Mountain, Manitoba

Project title / Projet

C17 STORES
Stony Mountain Institution (SMI)
Stony Mountain, Manitoba

FREEZER REPLACEMENT

Designed by / Conçu par: TONY MITOUSIS
Drawn by / Dessiné par:
Approved by / Approuvé par:
PWGSC Project Manager / Administrateur de Projets TPSGC: TIM LODGE

Drawing title / Titre du dessin

ELECTRICAL - POWER PLAN:
- EXISTING CONDITIONS AND DEMOLITIONS
ELECTRICAL SINGLE LINE DIAGRAM:
- EXISTING CONDITIONS

Project no./No. du projet	Drawing no./No. du dessin	Revision no.
R.086718.001	E-2 OF 3	0

PWGSC – A1 – 841X594