DOOR SCHEDULE

Door Schedule															
			Door						Frame						
			Size												
Door Number	Room Name	Fire Rating	Width	Height	Thickness	Panel & Frame Type	Door Material	Finish	Frame Material	Frame Finish	Frame Dimension	Throat Dimension	Glazing	Hardware	Remarks
Main Floor															
E04	NEW PROGRAM ROOM		915	2150	45	J	HM	P	PS	P			*meets level b protection as per CSC Technial Criteria; section 6.4.2.1; glazing*	05	*New Door, Existing Frame (To meet Builder Hardware (BH)*
E05	NEW BARRIER FREE WC		915	2150	45	A	HM	P	PS	P			*No Glazing*	03	*New Door and Frame (To meet Builder Hardware (BH)*
E07	NEW PROGRAM ROOM		915	2150	45	H	HM	P	PS	P			*to meet level b protection as per CSC Technial Criteria; section 6.4.2.1; glazing*	05	*New Door, Existing Frame (To meet Buider Hardware (BH)*
E09b	CORRIDOR E09 TO E02		915	2150	45	B	HM	P	PS	P			*to meet level b protection as per CSC Technial Criteria; section 6.4.2.1; glazing*	07	*New Door, Existing Frame (To meet Builder Hardware (BH)*
E12	NEW WAITING AREA		915	2150	50	H	HM	P	PS	P			*Commercial Level 3 Window, TG, LG*	02	*New Door (To meet Detention Hardware (DH1)*
E13	NEW VIDEO COURTROOM		915	2150	50	E	HM	P	PS	P			*Narrow light - 6mm TG*	04	*New Door and Frame (To meet Detention Hardware (DH1)*
E14	LAUNDRY ROOM		-	-	-	-	-	-	-	-			Replace glass with level-B protective glazing	-	*Existing Laundry Door and Frame to be relocated to new location - Reuse Hardware*
E15a	OBSERVATION GALLERY		915	2150	50	G	HM	P	HM	P			*meets level b protection as per CSC Technial Criteria; section 6.4.2.1; glazing*	08	*New Door and Frame (To meet Detention Hardware (DH2)*
E15b	OBSERVATION GALLERY		915	2150	50	G	HM	P	HM	P			*meets level b protection as per CSC Technial Criteria; section 6.4.2.1; glazing*	09	*New Door and Frame (To meet Detention Hardware (DH2)*
E15c	MECHANICAL SPACE		600	2150	45	D	HM	P	PS	P			-	10	*New Door and Frame (To meet Builder Hardware (BH)*
E15d	MECHANICAL SPACE		600	2150	45	D	HM	P	PS	P			-	10	*New Door and Frame (To meet Builder Hardware (BH)*
E16	NEW BF SHOWER		915	2150	-	C	S	P	PS	P			6mm Lexan spit shield with stainless steel framescrewed to gate with security screws	12	*New Gate (To meet Detention Hardware (DH1)*
E17	NEW BF CELL		915	2150	50	F	HM	P	PS	P			-	11	*New Frame - Reuse Existing E20 Cell Door to new location, (To meet Detention Hardware (DH2)*
E18	NEW CELL		850	2150	50	F	HM	P	PS	P			-	11	*New Frame, Reuse Existing E18 Cell Door to new location (To meet Detention Hardware (DH2)*
E19	NEW CELL		850	2150	50	F	HM	P	PS	P			-	11	*New Frame, Reuse Existing E19 Cell Door to new location (To meet Detention Hardware (DH2)*
E36	NEW WELLNESS ROOM		915	2150	45	A	HM	P	PS	P			-	06	*New Door and Frame (To meet Builder Hardware (BH)*
E09a	CORRIDOR E01 TO E09		915	2150	45	A	HM	P	PS	P				01	*New Door and Frame (To meet Detention Hardware (DH1)*

DOOR TYPES / ELVATIONS

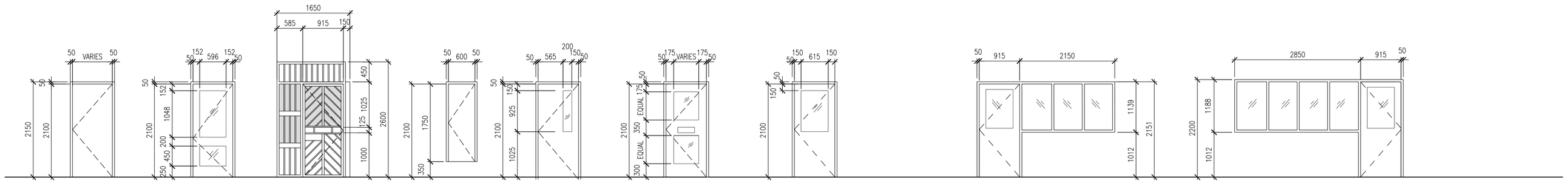

A — BARRIER-FREE BATHROOM DOOR (E05)

B — N/A

C — BF SHOWER DOOR (E16)

D — MAINTENANCE DOOR (E15c, E15d)

E — NEW VIDEO COURTROOM DOOR (E13)

F — EXISTING DOOR TO BE RELOCATED:

CELL DOOR (E18, E19)
BF CELL DOOR (E17)

G — OBSERVATION GALLERY (E15a & E15b)

Glazing (Meets Level B - Protection as per. CSC Technical Criteria)
- 6mm tempered glass
- airspace
- Monolithic polycarbonate of 12.7mm thickness
- 6mm tempered glass

H — NEW PROGRAM ROOM (E07)

Glazing (Meets Level B - Protection as per. CSC Technical Criteria)
- 6mm tempered glass
- airspace
- Monolithic polycarbonate of 12.7mm thickness
- 6mm tempered glass

NEW WAITING AREA (E12)

Glazing (Meets Level B - Protection as per. CSC Technical Criteria)
- 6mm tempered glass
- airspace
- Monolithic polycarbonate of 12.7mm thickness
- 6mm tempered glass

J — NEW PROGRAM ROOM (E04)

Glazing (Meets Level B - Protection as per. CSC Technical Criteria)
- 6mm tempered glass
- airspace
- Monolithic polycarbonate of 12.7mm thickness
- 6mm tempered glass

WINDOW SCHEDULE

WINDOW SCHEDULE (EXTERIOR)						
TYPE MARK	WIDTH	HEIGHT	HEAD HEIGHT	OPERATOR	NOTES	COUNT
W1	1000	1600	2400	YES	*meets Detention Level 2 (DW2) - For Secure Construction 3 application.*	3
W2 (existing)	-	-	-	-	*new glazing only:* *meets level b protection as per CSC Technial Criteria; section 6.4.2.1; glazing.* *frames: to remain, to be cleaned and repainted.*	-
W3 (existing)	-	-	-	-	*new glazing only:* *meets level b protection as per CSC Technial Criteria; section 6.4.2.1; glazing.* *frames: to remain, to be cleaned and repainted.*	-

DOOR & FRAME LEGEND

MATERIALS

HM	HOLLOW METAL
SS	STAINLESS STEEL
GS	GALVANIZED STEEL
S	STEEL

FINISH

P	PAINT
PS	PRESSED STEEL
TG	TEMPERED GLASS
LG	LAMINATED GLASS

WINDOW ELEVATIONS

W1
NEW OBSERVATION CELL EXTERIOR WINDOW

- INTERIOR VIEW

W3
NEW PROGRAM ROOM E07

Replace Glazing Only
Glazing (Meets Level B - Protection as per. CSC Technical Criteria)
- 6mm tempered glass
- airspace
- Monolithic polycarbonate of 12.7mm thickness
- 6mm tempered glass

Public Works and Government Services Canada / Travaux publics et Services gouvernementaux Canada

REAL PROPERTY SERVICES
Western Region
SERVICES IMMOBILIERS
Région de l'ouest

GENERAL NOTES

This drawing and all it's contents are protected by copyright, and shall not be reproduced, in whole or in part without the expressed written consent of Casola Koppe Architects Ltd. These drawings are not to be scaled. All dimensions are to face of stud or sheathing unless noted otherwise. Contractor must verify all dimensions, drawings, details and specifications. Any discrepancies are to be reported to Casola Koppe Architects Ltd. prior to proceeding with work; this includes any errors or omissions.

ARCHITECT

casola koppe ARCHITECTS

#300 - 1410 1st street sw , calgary, alberta T2R 0V8
bus (403) 287-9960 fax (403) 287-9962 info@ckarch.ca

Revision	Description	Date
5		
4		
3		
2		
1	REISSUED FOR TENDER	2018/06/28
0	ISSUED FOR TENDER	2018/05/25

Client / Client
CORRECTIONAL SERVICES CANADA

Project / Projet
CHURCHILL UNIT REDEVELOPMENT

Designed by / Conçu par: **PM**
Drawn by / Dessiné par: **MW, RH**
Approved by / Approuvé par:
PWGSC Project Manager / Administrateur de Projets TPSGC: **EH**

Drawing title / Titre du dessin
CHURCHILL UNIT DOOR AND WINDOW SCHEDULE

Project no./No. du projet	Drawing no./No. du dessin	Revision no.
R.082215.001	A6.0	0