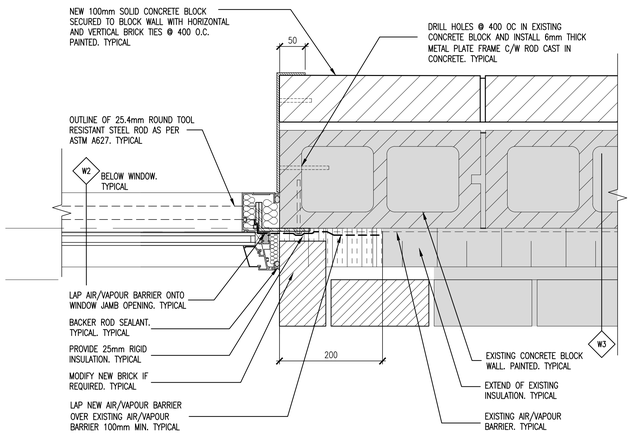

1 A4.0 WINDOW JAMB DETAIL @ EXISTING WALL
1 : 5

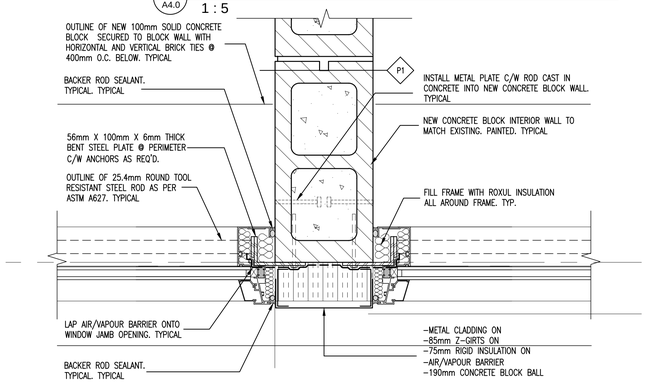

2 A4.0 WINDOW JAMB DETAIL @ NEW INTERIOR WALL
1 : 5

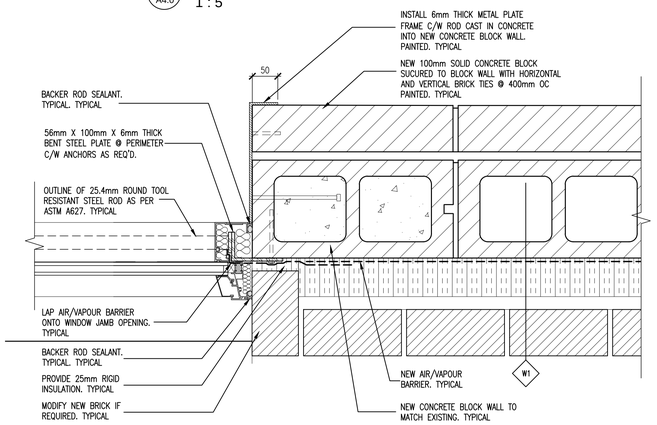

3 A4.0 WINDOW JAMB DETAIL @ NEW WALL
1 : 5

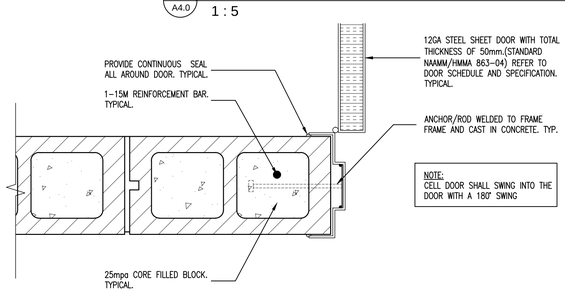

4 A4.0 INTERIOR NEW DOOR DETAIL
1 : 5

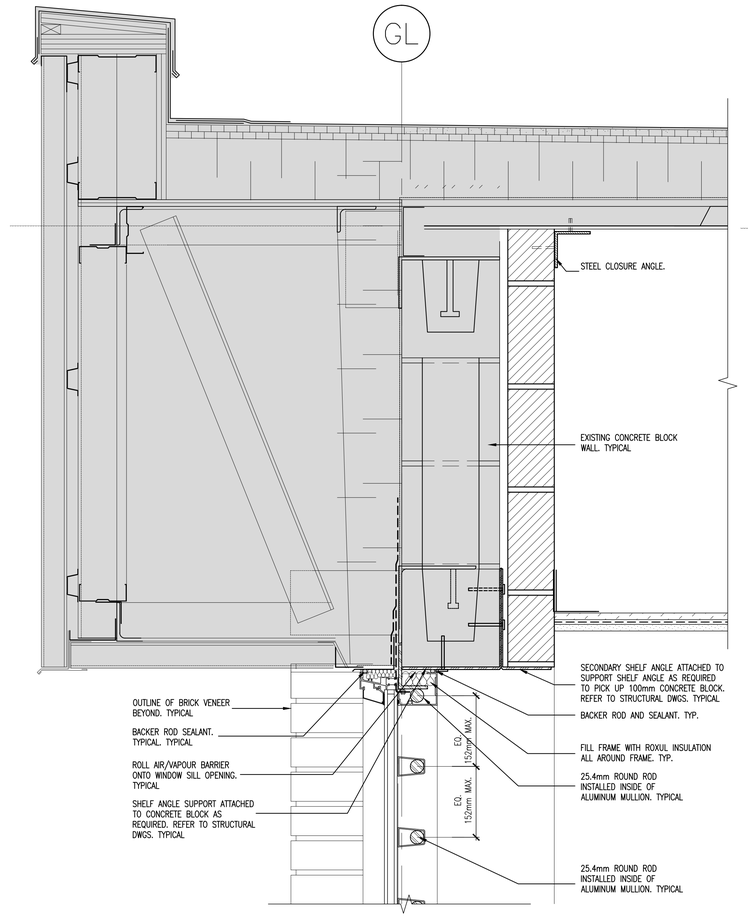

5 A4.0 SECTION DETAIL @ NEW WINDOW SILL
1 : 5

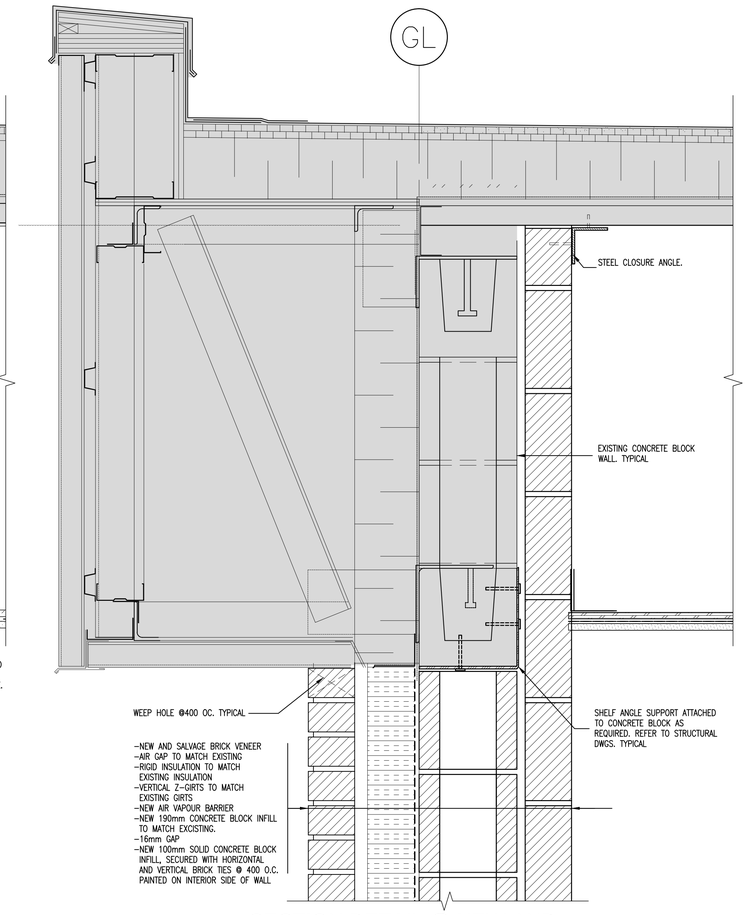

7 A4.0 SECTION DETAIL @ NEW AND EXISTING WALL
1 : 5

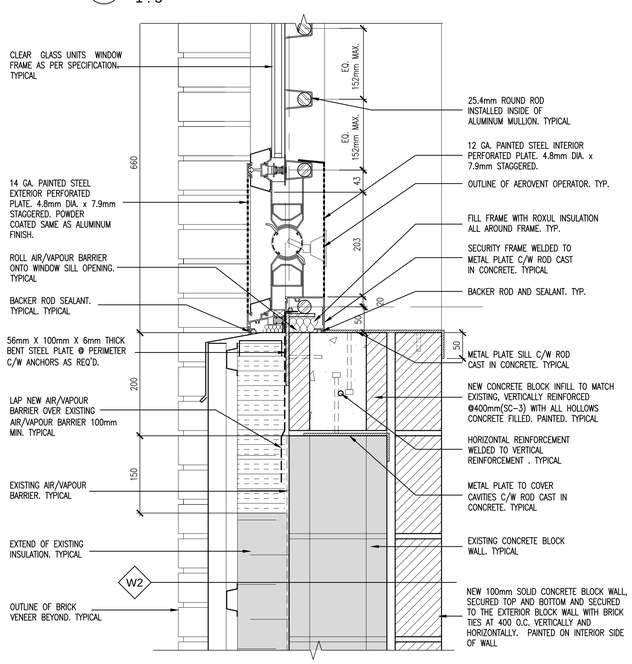

6 A4.0 SECTION DETAIL @ NEW WINDOW SILL
1 : 5

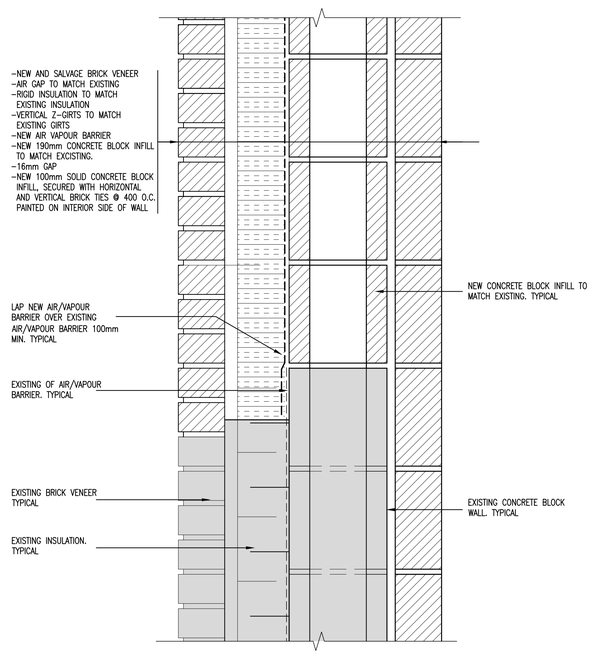

8 A4.0 SECTION DETAIL @ NEW AND EXISTING WALL
1 : 5

Public Works and Government Services Canada / Travaux publics et Services gouvernementaux Canada

REAL PROPERTY SERVICES
Western Region
SERVICES IMMOBILIERS
Région de l'ouest

GENERAL NOTES

This drawing and all it's contents are protected by copyright, and shall not be reproduced, in whole or in part without the expressed written consent of Casola Koppe Architects Ltd. These drawings are not to be scaled. All dimensions are to face of stud or sheathing unless noted otherwise. Contractor must verify all dimensions, drawings, details and specifications. Any discrepancies are to be reported to Casola Koppe Architects Ltd. prior to proceeding with work; this includes any errors or omissions.

ARCHITECT
casola koppe ARCHITECTS
#300 - 1410 1st street sw , calgary, alberta T2R 0V8
bus (403) 287-9960 fax (403) 287-9962 info@ckarch.ca

PROJECT NORTH TRUE NORTH

Revision	Description	Date
5		
4		
3		
2		
1		
0	ISSUED FOR TENDER	2018/05/25

Client / Client
CORRECTIONAL SERVICES CANADA

Project / Projet
CHURCHILL UNIT REDEVELOPMENT

Designed by / Conçu par: **PM**
Drawn by / Dessiné par: **MW, RH**
Approved by / Approuvé par:
PWGSC Project Manager / Administrateur de Projets TPSGC: **EH**

Drawing title / Titre du dessin
CHURCHILL UNIT PLAN AND SECTION DETAILS

Project no./No. du projet	Drawing no./No. du dessin	Revision no.
R.082215.001	A4.0	0

PWGSC – B1 – 1000x707

A000