Public Works and Government Services Canada | Travaux publics et Services gouvernementaux Canada

RETURN BIDS TO:
RETOURNER LES SOUMISSIONS À:

Bid Receiving Public Works & Government Services Canada/Réception des souissions Travaux publics et Services gouvernementaux Canada
1713 Bedford Row
Halifax, N.S./Halifax,(N.E.)
Halifax
Nova Scotia
B3J 1T3
Bid Fax: (902) 496-5016

SOLICITATION AMENDMENT
MODIFICATION DE L'INVITATION

The referenced document is hereby revised; unless otherwise indicated, all other terms and conditions of the Solicitation remain the same.

Ce document est par la présente révisé; sauf indication contraire, les modalités de l'invitation demeurent les mêmes.

Comments - Commentaires

Vendor/Firm Name and Address
Raison sociale et adresse du fournisseur/de l'entrepreneur

Issuing Office - Bureau de distribution

Atlantic Region Acquisitions/Région de l'Atlantique Acquisitions
1713 Bedford Row
Halifax, N.S./Halifax, (N.E.)
Halifax
Nova Scot
B3J 1T3

Title - Sujet CCGC Mechanical and Sprinklers	
Solicitation No. - N° de l'invitation EB144-190543/A	**Amendment No. - N° modif.** 008
Client Reference No. - N° de référence du client EB144-19-0543	**Date** 2018-08-14
GETS Reference No. - N° de référence de SEAG PW-$PWA-121-5750	
File No. - N° de dossier PWA-8-80020 (121)	**CCC No./N° CCC - FMS No./N° VME**
Solicitation Closes - L'invitation prend fin at - à 02:00 PM on - le 2018-08-21	**Time Zone** **Fuseau horaire** Atlantic Daylight Saving Time ADT
F.O.B. - F.A.B. **Plant-Usine:** ☐ **Destination:** ☑ **Other-Autre:** ☐	
Address Enquiries to: - Adresser toutes questions à: Russell (PWA), Alex	**Buyer Id - Id de l'acheteur** pwa121
Telephone No. - N° de téléphone (902) 401-8180 ( )	**FAX No. - N° de FAX** (902) 496-5016
Destination - of Goods, Services, and Construction: **Destination - des biens, services et construction:**	

Instructions: See Herein

Instructions: Voir aux présentes

Delivery Required - Livraison exigée	**Delivery Offered - Livraison proposée**
Vendor/Firm Name and Address **Raison sociale et adresse du fournisseur/de l'entrepreneur** **Telephone No. - N° de téléphone** **Facsimile No. - N° de télécopieur**	
Name and title of person authorized to sign on behalf of Vendor/Firm (type or print) **Nom et titre de la personne autorisée à signer au nom du fournisseur/ de l'entrepreneur (taper ou écrire en caractères d'imprimerie)** **Signature**	**Date**

Canada

This Addendum and all Addenda amends and forms an integral part of the Bidding and Contract documents and shall be read in conjunction with the same.

Q. A number of the RCP drawings for the Coast Guard College are showing either new or demoed mechanical services on the incorrect layouts. An example of this is on all residence demo RCPs, where both demo and new sprinkler heads are showing up.

A. Refer to the Mechanical and Electrical Drawings for Mechanical and Electrical information and scope, including all existing information, demolitions and new works. Background representation of M&E systems on the Architectural drawings shall be removed for purposes of the IFC drawings to be issues. Note that all coordination between ceiling layouts and M&E system mounted therein is shown on the M&E drawings only.

ADDENDUM NO. 2

.1 Revise Answer 5 to the following: No, triple duty valves are not approved on pumps with variable speed drives. Installation shall be as per detail 5 drawing MH502.

ADDENDUM NO. 5

.1 Item 1.2: SECTION 25 05 01 – EMCS GENERAL REQUIREMENTS
Revise numbering of new items added as follows:

.15 MISCELLANEOUS CONTROL WIRING
.16 INTERFACING WITH VACUUM PUMP SYSTEM (Bldg 12 Seawater Pumphouse)
.17 EXISTING BUILDING CONTROL SYSTEMS (ALL BUILDING)
.18 EMCS CONTROLS IN COMPLETED CONSTRUCTION PHASES

PART 2 SPECIFICATION REFERENCE

Item 2.1 SECTION 11 41 23 – PREFABRICATED WALK-IN FREEZERS AND COOLERS

.1 Under clause 2.8, add the following: ".6 Condensing unit to be equipped with dry contacts with feedback of an alarm condition to the EMCS."

Item 2.2 SECTION 23 05 16 EXPANSION FITTINGS AND LOOPS FOR HVAC PIPING

.1 Add the following:

2.4 EXPANSION JOINTS

.1 Bellow type, corrugated packless as follows:

.1 With external 300 series stainless steel guide sleeves, and external rings with machined faces abutting each other for full circumference.

.2 With external guide rods.

.3 Flanged ends.

.4 Shrouds over external surfaces for insulation.

.5 Pipe alignment guide as indicated c/w guiding cylinder and base, cast or fabricated spider, hex head bolts and hex nuts. Use minimum of three pipe guides on each side of the expansion joint. Locate first pipe alignment no more than four (4) pipe diameters from the expansion joint compensators. The second guide shall be located no more than fourteen (14) pipe diameters from the first guide. The remaining guides shall be located as recommended by the manufacturer.

.6 Engineer reserves right to compress one or more of each size of joint to its solid height to ensure that nameplate traverse is met. After which, joint shall be expanded to its shipping face to face dimension and re-checked hydrostatically. On joint failing, joints shall be removed from site as unacceptable.

.7 Axial Traverse: pipe expansion plus 25% or as indicated.

.8 Working Pressure: 860 kPa.

2.5 EXPANSION COMPENSATORS

.1 Factory assembled unit with stainless steel bellows in carbon steel casing. Install with anti-torque groove in case, internally guide pipe at both ends. Provide full length internal liner to contained medium. Install on pipes 63mm and smaller.

.2 Expansion compensators to have 75mm compression stroke and 6mm extension stroke.

.3 Provide anchors precisely where indicated.

.4 Provide pipe alignment guides as specified for expansion joints above in expansion joints.

.5 Working Pressure: 860 kPa."

.2 Item 3.1 Installation: Revise sentence .2 to read:
".2 Provide expansion loops and expansion joints as indicated and as required for proper operation of the piping system."

Item 2.3 SECTION 23 21 13.02 – HYDRONIC SYSTEMS - STEEL

.1 Under clause 2.6 delete all references to Victaulic and the associated model numbers.

Item 2.4 SECTION 23 25 00 – HVAC WATER TREATMENT SYTEMS

.1 Item 3.8.2 Glycol Heating Systems: This also applies to glycol cooling systems. In addition to the glycol systems in this project, provide glycol for all HXWS &R piping system including services within Bldg 12- Seawater Pumphouse and underground HXWS & R piping between Bldg 12 Seawater Pumphouse and Bldg 01 Cabot.

Item 2.5 SECTION 23 51 00 BREECHING, CHIMNEYS AND STACKS

.1 Item 2.2.2: Add: ".4 Thickness: 50mm".

Item 2.6 SECTION 23 81 23 – COMPUTER ROOM AIR CONDITIONING

.1 Replace this specification section with the attached version dated 2018-08-10.

PART 3 DRAWING REFERENCE

Item 3.1 DRAWING 01-MC-101 CONTROLS – CABOT - SCHEMATICS

.1 Revise the drawing as per the attached Sketch 01-MC-SK002 (This Addendum).

Item 3.2 DRAWING 01-MC-103 CONTROLS CABOT - SCHEMATICS

.1 Revise the drawing as per the attached Sketch 01-MC-SK001 (This Addendum).

Item 3.3 DRAWING 01-MDH–401 - HVAC PIPING – CABOT - BOILER ROOM DEMOLITION

.1 Revise Low Level Piping Demolition per sketch 01-MDH-SK002 (This Addendum).

Item 3.4 DRAWING 01-MH-103 HVAC PIPING – CABOT CENTRAL - LEVEL 100 NEW WORK

.1 Revise the drawing as per the attached Sketch 01-MH-SK012 (This Addendum).

Item 3.5 DRAWING 01-MH-104 HVAC PIPING – CABOT CENTRAL - LEVEL 200 NEW WORK

.1 Revise the drawing as per the attached Sketch 01-MH-SK012 (This Addendum).

Item 3.6 DRAWING 01-MH-105 HVAC PIPING – CABOT CENTRAL - LEVEL 300 NEW WORK

.1 Revise the drawing as per the attached Sketch 01-MH-SK012 (This Addendum).

Item 3.7 DRAWING 01-MH-106 HVAC PIPING – CABOT CENTRAL - LEVEL 400 NEW WORK

.1 Revise the drawing as per the attached Sketch 01-MH-SK012 (This Addendum).

Item 3.8 DRAWING 01-MH–111 - HVAC PIPING – CABOT TUNNELS - NEW WORK

.1 Add expansion joints, pipe anchors and pipe guides to heating services in East and West Tunnels per sketch 01-MH-SK011 (This Addendum).

Item 3.9 DRAWING 01-MH–401 - HVAC PIPING - CABOT - BOILER ROOM NEW WORK

.1 Cabot Boiler Room – New Work floor plan: Revise note on 200 diam. HXWS & HXWR piping entering Boiler Room along grid line 35Y near grid line 24X to read as follows: 200 mm diameter HXWS & HXWR piping to exit Boiler room exterior wall and run underground and connect to HXWS & HXWR piping services provide under Project R.065476.711 at 1500mm from Boiler Room Foundation wall. In addition to the glycol systems in this contract, this project shall be responsible for providing glycol solution for entire HXWS & R piping system back to Seawater pumphouse.

Item 3.10 DRAWING 01-MH–503 HVAC PIPING – CABOT - DETAILS

.1 Add Detail 3 to this drawing per Sketch 06-MH-SK004 HVAC Piping Wall Mounted Fan Coil Detail Revisions dated 2018-08-10 (This Addendum).

.2 Revise the drawing as per the attached Sketch 01-MH-SK015 (This Addendum).

Item 3.11 DRAWING 01-MH–602 - HVAC PIPING – CABOT SCHEDULES

.1 Revise Pump Schedule per sketch 01-MH-SK008 (This Addendum).

.2 Add Expansion Tank Schedule per sketch 01-MH-SK009 (This Addendum).

.3 Add Air Separator Schedule per sketch 01-MH-SK010 (This Addendum).

.4 Add Heating Coil Schedule per sketch 01-MH-SK013 (This Addendum).

.5 Revise the drawing as per the attached Sketch 01-MH-SK014 (This Addendum).

Item 3.12 DRAWING 01-MDP–107 PLUMBING - CABOT EAST - LEVEL 100 DEMOLITION

.1 Revise the drawing as per the attached sketch 01-MDP-SK001.

Item 3.13 DRAWING 01-MP–102 PLUMBING - CABOT WEST - LEVEL 300 NEW WORK

.1 Revise condensate pipe sizing from AHU1-1 to existing hub drain on 3110C Mechanical Mezzanine from 25mm to 38mm.

Item 3.14 DRAWING 01-MP–105 PLUMBING - CABOT CENTRAL - LEVEL 300 NEW WORK

.1 Revise condensate pipe sizing from louvres and AHU1-2 in Mechanical Room 3116 per Sketch 08-MP-SK001 Cabot Level 300 Condensate Pipe Sizing dated 2018-08-10 (This Addendum).

Item 3.15 DRAWING 01-MP-106 PLUMBING - CABOT CENTRAL - LEVEL 400 NEW WORK

.1 Revise the drawing as per the attached Sketch 01-MP-SK011 (This Addendum).

Item 3.16 DRAWING 01-MP–109 PLUMBING - CABOT EAST - LEVEL 300 NEW WORK

.1 Revise condensate pipe sizing from AHU1-3 to existing funnel floor drain in Mechanical Room 3152 from 19mm to 38mm.

.2 Revise condensate pipe sizing from louvres to existing funnel floor drain in Mechanical Room 3152 from 19mm & 25mm to 38mm.

.3 Revise condensate pipe sizing from AHU1-4 to existing funnel floor drain in Mechanical Room 3148 from 19mm to 38mm.

.4 Revise condensate pipe sizing from louvres to existing funnel floor drain in Mechanical Room 3152 from 19mm to 38mm.

Item 3.17 DRAWING 01-MP–401 PLUMBING - CABOT WEST - FREEZER/COOLER HEAT RECOVERY LAYOUT & SCHEMATICS

.1 Revise freezer/cooler heat recovery plan and schematics per Sketch 01-MP-SK008 Plumbing Cabot West Level 100 Freezer/Cooler Heat Recovery Plan & Schematics dated 2018-08-10 (This Addendum).

Item 3.18 DRAWING 01-MP–501 - CABOT - PLUMBING DETAILS

.1 Revise pipe sizing on Detail 8 of this drawing per Sketch 01-MP-SK006 Pipe Sizing for Humidifier Piping Detail dated 2018-08-10 (This Addendum).

Item 3.19 DRAWING 01-MP–601 - CABOT - PLUMBING SCHEDULES

.1 Refer to Sketch 01-MP-SK010 Cabot West Level 100 Freezer/Cooler Heat Recovery Schedules & Details dated 2018-08-10 (This Addendum).

Item 3.20 DRAWING 01-MV–110 - HVAC – VENTILATION CABOT EAST LEVEL 400 NEW WORK

.1 Add atrium Smoke Exhaust Fan System EF1-18 per sketch 01-MV-SK007 (This Addendum).

Item 3.21 DRAWING 01-MV–502 - CABOT - VENTILATION DETAILS

.1 Add Detail 10 to this drawing per Sketch 01-MV-SK009 Vertical Ducted Fan Coil Detail dated 2018-08-10 (This Addendum).

Item 3.22 DRAWING 01-MV-602 - VENTILATION - CABOT SCHEDULES

.1 Revise Exhaust Fan Schedule per sketch 01-MV-SK006 (This Addendum).

Item 3.23 DRAWING 01-MV-605 - VENTILATION - CABOT SCHEDULES

.1 Provide installation of cross talk silencers complete with ductwork and grilles as detailed per sketch 01-MV-SK008 (This Addendum).

Item 3.24 DRAWING 02-MH–101 HVAC PIPING ARCTIC LEVEL 100 & 200 NEW WORK

.1 Revise location of CHWS & CHWR piping to relocated fan coil FC2-1.09, and add Humidifier HU2-4 to Mech Room E113 per Sketch 02-MH-SK001 Humidifier HU2-4 Mech Rm E113 dated 2018-08-10 (This Addendum).

Item 3.25 DRAWING 02-MH–502 ARCTIC/ATLANTIC HVAC PIPING DETAILS

.1 Revise Detail 3 of this drawing per Sketch 06-MH-SK004 HVAC Piping Wall Mounted Fan Coil Detail Revisions dated 2018-08-10 (This Addendum).

Item 3.26 DRAWING 02-MP–101 PLUMBING ARCTIC LEVEL 100 & 200 NEW WORK

.1 Add humidifier HU2-4 to Mech Room E113 per Sketch 02-MP-SK001 Addition of Humidifier HU2-4 in Mech Rm 113 dated 2018-08-10 (This Addendum).

.2 Revise condensate drain piping to relocated fan coil FC2-1.09 per Sketch 02-MP-SK002 Relocated FC2-1.09 Condensate Line Addition dated 2018-08-10 (This Addendum).

Item 3.27 DRAWING 02-MV–101 VENTILATION ARCTIC LEVEL 100 & 200 NEW WORK

.1 Revise location of fan coil FC2-1.09 and associated ductwork per Sketch 02-MV-SK001 Fan Coil FC2-1.09 Revisions dated 2018-08-10 (This Addendum).

Item 3.28 DRAWING 02-MV–502 ARCTIC/ATLANTIC VENTILATION DETAILS

.1 Add Detail 8 to this drawing per Sketch 01-MV-SK009 Vertical Ducted Fan Coil Detail dated 2018-08-10 (This Addendum).

Item 3.29 DRAWING 03-MH–502 GREAT LAKES/PACIFIC HVAC PIPING DETAILS

.1 Revise Detail 7 of this drawing per Sketch 06-MH-SK004 HVAC Piping Wall Mounted Fan Coil Detail Revisions dated 2018-08-10 (This Addendum).

.2 Revise Detail 8 of this drawing per Sketch 06-MH-SK005 HVAC Piping Wall Mounted Fan Coil Detail Revisions dated 2018-08-10 (This Addendum).

.3 Revise Detail 9 of this drawing per Sketch 06-MH-SK006 HVAC Piping Wall Mounted Fan Coil Detail Revisions dated 2018-08-10 (This Addendum).

Item 3.30 DRAWING 03-MP–103 PLUMBING GREAT LAKES LEVEL 100 & 200 NEW WORK

.1 Revise domestic water lines for heat exchanger removal and replacement in Mechanical Room D112 per Sketch 03-MP-SK001 03 – Pacific/Great Lakes Heat Exchanger Revision dated 2018-08-10 (This Addendum).

Item 3.31 DRAWING 03-MV–101 VENTILATION PACIFIC LEVEL 100 & 200 NEW WORK

.1 Washroom exhaust duct size from room C202 to be 200x100.

.2 Level 200 - 100ø F/A duct to the left of grid line 2 to tie into fan coil VFC3-2.04.

Item 3.32 DRAWING 03-MV–102 VENTILATION PACIFIC LEVEL 300 & ATTIC NEW WORK

.1 Revise S/A duct from attic to Office C319 to be 300x150.

.2 Fan coil FC3-4.07 to be controlled from thermostat located in corridor below.

.3 Fan coil FC3-4.08 to be controlled from thermostat located in Office C314 below.

.4 Fan coil FC3-4.09 to be controlled from thermostat located in corridor below.

.5 Fan coil FC3-4.10 to be controlled from thermostat located in Office C319 below.

.6 Fan coil FC3-4.11 to be controlled from thermostat located in corridor below.

.7 Fan coil FC3-4.12 to be controlled from thermostat located in MCTS Training Room C307 below.

Item 3.33 DRAWING 03-MV–104 VENTILATION GREAT LAKES LEVEL 300 & ATTIC NEW WORK

.1 Fan coil FC3-4.01 to be controlled from thermostat located in corridor below.

.2 Fan coil FC3-4.02 to be controlled from thermostat located in Dorm 453 below.

.3 Fan coil FC3-4.03 to be controlled from thermostat located in corridor below.

.4 Fan coil FC3-4.04 to be controlled from thermostat located in Dorm 463 below.

.5 Fan coil FC3-4.05 to be controlled from thermostat located in corridor below.

.6 Fan coil FC3-4.06 to be controlled from thermostat located in Dorm 586 below.

Item 3.34 DRAWING 03-MV–502 GREAT LAKES/PACIFIC VENTILATION DETAILS

.1 Add Detail 8 to this drawing per Sketch 01-MV-SK009 Vertical Ducted Fan Coil Detail dated 2018-08-10 (This Addendum).

Item 3.35 DRAWING 04-MH–103 HVAC PIPING MIRAMICHI LEVEL 100 & 200 NEW WORK

.1 Level 100 - Provide control of fan coil VFC4-1.02 from thermostat shown in corridor.

Item 3.36 DRAWING 04-MH–502 SAGUENAY/MIRAMICHI HVAC PIPING DETAILS

.1 Revise Detail 3 of this drawing per Sketch 06-MH-SK004 HVAC Piping Wall Mounted Fan Coil Detail Revisions dated 2018-08-10 (This Addendum).

Item 3.37 DRAWING 04-MV–101 VENTILATION SAGUENAY LEVEL 100 & 200 NEW WORK

.1 Elec Room AA131 – Ceiling exhaust and return grilles to be E6/R6, 102L/s. Sidewall return grille to be RG5, 102L/s. E/A duct to EF4-1 to be 250x150. R/A duct to be 400x150.

.2 Elec Room AA148 – Sidewall exhaust grille to be EG1, 28L/s. E/A duct from EF4-2 to be 200x200.

.3 Level 100 - Revise F/A duct riser size to fan coil FC4-1.04 to be 150ø.

.4 Level 200 – Revise E/A duct size up/dn in wall at grid line 11 between AA230 Laundry and 417 Cadet Captain to 250x100.

Item 3.38 DRAWING 04-MV–102 VENTILATION SAGUENAY LEVEL 300 & ATTIC NEW WORK

.1 Fan coil FC4-4.01 to be controlled from thermostat located in corridor below.

.2 Fan coil FC4-4.02 to be controlled from thermostat located in Dorm 404 below.

.3 Fan coil FC4-4.03 to be controlled from thermostat located in corridor below.

.4 Fan coil FC4-4.04 to be controlled from thermostat located in Dorm 429 below.

.5 Fan coil FC4-4.05 to be controlled from thermostat located in corridor below.

.6 Fan coil FC4-4.06 to be controlled from thermostat located in Dorm 437 below.

Item 3.39 DRAWING 04-MV–103 VENTILATION MIRAMICHI LEVEL 300 & ATTIC NEW WORK

.1 Elec Room BB197 – Ceiling exhaust and return grilles to be E6/R6, 102L/s. Sidewall return grille to be RG5, 102L/s. E/A duct to EF4-4 to be 250x150. R/A duct to be 400x150.

.2 Elec Room BB189 – Sidewall exhaust grille to be EG1, 28L/s. E/A duct from EF4-3 to be 200x200.

Item 3.40 DRAWING 04-MV–502 SAGUENAY/MIRAMICHI VENTILATION DETAILS

.1 Add Detail 8 to this drawing per Sketch 01-MV-SK009 Vertical Ducted Fan Coil Detail dated 2018-08-10 (This Addendum).

Item 3.41 DRAWING 04-MV–601 VENTILATION SAGUENAY/MIRAMICHI SCHEDULES

.1 Exhaust Fan Schedule – Revise air flows of exhaust fans EF4-1 & EF4-4 from 189 L/s to 102 L/s.

Item 3.42 DRAWING 05-MC-101 CONTROLS – TELC/MCTS/MECKENZIE SCHEMATICS

.1 Revise the drawing as per the attached Sketch 05-MH-SK001 (This Addendum).

Item 3.43 DRAWING 05-MDH-101 HVAC PIPING - TELC/MCTS – LEVEL 100 – 200 DEMOLITION

.1 Revise the drawing as per the attached Sketch 05-MDH-SK001 (This Addendum).

Item 3.44 DRAWING 05-MDP-101 PLUMBING – TELC/MCTS – LEVEL 100 – 200 DEMOLITION

.1 Revise the drawing as per the attached Sketch 05-MDP-SK001 (This Addendum).

Item 3.45 DRAWING 05-MDV-101 VENTILATION – TELC/MCTS LEVEL 100 – 200 DEMOLITION

.1 Revise the drawing as per the attached Sketch 05-MDV-SK001 (This Addendum).

Item 3.46 DRAWING 05-MDV–103 VENTILATION MACKENZIE LEVEL 100 & 200 DEMOLITION

.1 Workshop CC107 – Revise existing wall-mounted exhaust fan, associated ductwork, and wall cap as existing to remain.

Item 3.47 DRAWING 05-MH-101 HVAC PIPING – TELC/MCTS – LEVEL 100 – 200 NEW WORK

.1 Revise the drawing as per the attached Sketch 05-MH-SK001(This Addendum).

.2 Level 100 – Remove RL and RG piping shown between WM5-1.08 (MacKenzie) and existing Condensing Unit AC5-06e. Provide new 19mm CHWS & CHWR branch lines to serve WM5-1.08 from 50mm CHWS & 75mm CHWR lines running above corridor ceiling.

.3 Level 100 – Provide new CHWS & CHWR branch lines to serve ducted fan coils FC4-1.03 from CHWS & CHWR lines running above corridor ceiling.

.4 Level 200 – Provide new CHWS & CHWR branch lines to serve ducted fan coils FC4-2.01, FC4-2.02, FC4-2.03, & FC4-2.04 from CHWS & CHWR lines running through level 200 corridor ceiling.

Item 3.48 DRAWING 05-MH–103 HVAC PIPING MACKENZIE LEVEL 100 & 200 NEW WORK

.1 Level 100 – Revise room temperature sensor serving WM5-1.08 in Elec Room DD175 to a thermostat.

Item 3.49 DRAWING 05-MH–502 MCTS/MACKENZIE HVAC PIPING DETAILS

.1 Revise Detail 3 of this drawing per Sketch 06-MH-SK004 HVAC Piping Wall Mounted Fan Coil Detail Revisions dated 2018-08-10 (This Addendum).

Item 3.50 DRAWING 05-MP-101 PLUMBING – TELC/MCTS – LEVEL 100 – 200 NEW WORK

.1 Revise the Drawing as per the attached Sketch 05-MP-SK002 (This Addendum).

Item 3.51 DRAWING 05-MV-101 VENTILATION – TELC/MCTS – LEVEL 100 – 200 NEW WORK

.1 Revise the drawing as per the attached Sketch 05-MV-SK001 (This Addendum).

.2 Workshop CC107 – Delete new exhaust hood, associated wall cap, and wall cap.

Item 3.52 DRAWING 05-MV–103 VENTILATION MACKENZIE LEVEL 100 & 200 NEW WORK

.1 Elec Room DD169 – Sidewall exhaust grille to be EG1, 28L/s. E/A duct from EF5-1 to be 200x200.

Item 3.53 DRAWING 05-MV–104 VENTILATION MACKENZIE LEVEL 300 & ATTIC NEW WORK

.1 Level 300 – Revise S/A duct riser size in mechanical shaft to the left of grid line 4 to be 450x200 UP, 450x150 DN.

Item 3.54 DRAWING 05-MV-301 VENTILATION – TELC/MCTS/MACKENIZE SECTIONS

.1 Revise the drawing as per the attached Sketch 05-MV-SK002 (This Addendum).

Item 3.55 DRAWING 05-MV–502 MCTS/MACKENZIE VENTILATION DETAILS

.1 Add Detail 8 to this drawing per Sketch 01-MV-SK009 Vertical Ducted Fan Coil Detail dated 2018-08-10 (This Addendum).

Item 3.56 DRAWING 05-MV-601 VENTILATION – TELC/MCTS/MACKENZIE SCHEDULES

.1 Revise the drawing as per the attached Sketch 05-MV-SK003 (This Addendum).

Item 3.57 DRAWING 06-MH–502 ALERT HVAC PIPING DETAILS

.1 Revise Detail 7 of this drawing per Sketch 06-MH-SK004 HVAC Piping Wall Mounted Fan Coil Detail Revisions dated 2018-08-10 (This Addendum).

.2 Revise Detail 8 of this drawing per Sketch 06-MH-SK005 HVAC Piping Wall Mounted Fan Coil Detail Revisions dated 2018-08-10 (This Addendum).

.3 Revise Detail 9 of this drawing per Sketch 06-MH-SK006 HVAC Piping Wall Mounted Fan Coil Detail Revisions dated 2018-08-10 (This Addendum).

Item 3.58 DRAWING 06-MV–502 ALERT VENTILATION DETAILS

.1 Add Detail 10 to this drawing per Sketch 01-MV-SK009 Vertical Ducted Fan Coil Detail dated 2018-08-10 (This Addendum).

Item 3.59 DRAWING 07-MH–502 ST. LAURENT HVAC PIPING DETAILS

.1 Revise Detail 3 of this drawing per Sketch 06-MH-SK004 HVAC Piping Wall Mounted Fan Coil Detail Revisions dated 2018-08-10 (This Addendum).

Item 3.60 DRAWING 07-MV–102 VENTILATION ST. LAURENT 300 & ATTIC NEW WORK

.1 Attic level - Revise two E/A duct riser sizes up from level below along wall of grid line 12’ to be 200x75.

Item 3.61 DRAWING 07-MV–502 ST. LAURENT VENTILATION DETAILS

.1 Add Detail 10 to this drawing per Sketch 01-MV-SK009 Vertical Ducted Fan Coil Detail dated 2018-08-10 (This Addendum).

Item 3.62 DRAWING 07-MV–601 VENTILATION ST. LAURENT SCHEDULES

.1 Exhaust Fan Schedule – Revise air flows of exhaust fans EF7-1 & EF7-2 from 189 L/s to 102 L/s.

Item 3.63 DRAWING 08-MP–101 PLUMBING D’IBERVILLE CENTRE LEVEL 100 NEW WORK

.1 Revise all new condensate line sizing in Mechanical Room P109 down from level 200 to existing floor drain to be 38mm.

Item 3.64 DRAWING 08-MP–102 PLUMBING D’IBERVILLE CENTRE LEVEL 200 & 300 NEW WORK

.1 Revise new condensate line up/dn in level 200 mechanical chase next to ERV8-1 from 19mm to 38mm.

.2 Revise condensate pipe sizing from louvres and AHU8-2 in Level 300 Mechanical Room next to Gym per Sketch 08-MP-SK001 D'Iberville Centre Level 300 Condensate Pipe Sizing dated 2018-08-10 (This Addendum).

.3 Provide new 19mm condensate from ERV8-2 in Mechanical Room P302 and run to nearest existing floor drain.

Item 3.65 DRAWING 08-MV–502 D'IBERVILLE CENTRE VENTILATION DETAILS

.1 Add Detail 4 to this drawing per Sketch 01-MV-SK009 Vertical Ducted Fan Coil Detail dated 2018-08-10 (This Addendum).

Item 3.66 ADD THE FOLLOWING NEW DRAWINGS

BLDG	SKETCH	SKETCH TITLE	DATE
01 CABOT	**01-MC-SK001**	EMCS System Architecture	2018-08-10
01 CABOT	**01-MC-SK002**	Split System Control	2018-08-10
01 CABOT	**01-MDP-SK001**	1403C Boiler Exist. Hot Water Tank Connections	2018-08-10
01 CABOT	**01-MDH-SK002**	01 – Cabot Level 100 Boiler Room 1403C Piping Demolition Revisions	2018-08-10
01 CABOT	**01-MH–SK008**	01 – Cabot Building Pump Schedule	2018-08-10
01 CABOT	**01-MH-SK009**	01 – Cabot Expansion Tank Schedule	2018-08-10
01 CABOT	**01-MH-SK010**	01 – Cabot Air Separator Schedule	2018-08-10
01 CABOT	**01-MH-SK011**	01 – Cabot Level 100 West & East Tunnels Expansion Joints	2018-08-10
01 CABOT	**01-MH-SK012**	Cabot Central Server Rm 4115 Split System	2018-08-10
01 CABOT	**01-MH-SK013**	01 – Cabot Heating Coil Schedule	2018-08-10
01 CABOT	**01-MH-SK014**	Cabot Split System Schedules	2018-08-10
01 CABOT	**01-MH-SK015**	Cabot Split System Details	2018-08-10
01 CABOT	**01-MP-SK006**	Pipe Sizing for Humidifier Piping Detail	2018-08-10
01 CABOT	**01-MP-SK007**	Cabot Level 300 Condensate Pipe Sizing	2018-08-10
01 CABOT	**01-MP-SK008**	Plumbing – Cabot West – Freezer/Cooler Heat Recovery Plan & Schematics	2018-08-10

BLDG	SKETCH	SKETCH TITLE	DATE
01 CABOT	**01-MP-SK009**	Cabot Level 100 Freezer/Cooler Condensate Piping	2018-08-10
01 CABOT	**01-MP-SK010**	Plumbing – Cabot West – Freezer/Cooler Heat Recovery Schedules & Details	2018-08-10
01 CABOT	**01-MP-SK011**	Cabot Central Server Room 4115 Split System Condensate Drain Piping	2018-08-10
01 CABOT	**01-MV-SK006**	01 – Cabot Return/Exhaust Fan Schedule	2018-08-10
01 CABOT	**01-MV-SK007**	EF1 – 18 Smoke Exhaust System Addition Storage Rm 4150	2018-08-10
01 CABOT	**01-MV-SK008**	01 – Cabot Building Cross Talk Silencer Schedule and Details	2018-08-10
01 CABOT	**01-MV-SK009**	Ducted Vertical Fan Coil Details	2018-08-10
02 ARCTIC/ ATLANTIC	**02-MH-SK001**	Humidifier HU2-4 Mech Rm E113	2018-08-10
02 ARCTIC/ ATLANTIC	**02-MP-SK001**	Addition of Humidifier HU2-4 in Mech Rm E113	2018-08-10
02 ARCTIC/ ATLANTIC	**02-MP-SK002**	Relocated FC2-1.09 Condensate Line Addition	2018-08-10
02 ARCTIC/ ATLANTIC	**02-MV-SK001**	02 – Arctic Fan Coil FC2-1.09 Revisions	2018-08-10
03 GREAT LAKES/PACIFIC	**03-MP-SK001**	03 – Pacific/Great Lakes Heat Exchanger Revision	2018-08-10
05 TELC/MCTS	**05-MC-SK001**	Existing Liebert CRAC Unit Controls	2018-08-10
05 TELC/MCTS	**05-MDH-SK001**	Heating Piping - Demolition MCTS Server Room CC108 Liebert Unit Revisions	2018-08-10
05 TELC/MCTS	**05-MDP-SK001**	Plumbing – Demolition MCTS Server Room CC108 Liebert Unit Revisions	2018-08-10
05 TELC/MCTS	**05-MDV-SK001**	Ventilation – Demolition MCTS Server Room CC108 Liebert Unit Revisions	2018-08-10
05 TELC/MCTS	**05-MH-SK001**	HVAC Piping – New Work	2018-08-10

BLDG	SKETCH	SKETCH TITLE	DATE
		MCTS Server Room CC108 Liebert Unit Revisions	
05 TELC/MCTS	**05-MP-SK002**	Plumbing – New Work MCTS Server Room CC108 Liebert Unit Revisions	2018-08-10
05 TELC/MCTS	**05-MV-SK001**	Ventilation – New Work MCTS Server Room CC108 Liebert Unit Revisions	2018-08-10
05 TELC/MCTS	**05-MV-SK002**	05 - MCTS MCTS Server Room CC108 Sections	2018-08-10
05 TELC/MCTS	**05-MV-SK003**	05 - MCTS Sidewall, Supply, Exhaust, & Return Grille Schedules Revisions	2018-08-10
06 ALERT	**06-MH-SK004**	HVAC Piping Wall Mounted Fan Coil Detail Revisions	2018-08-10
06 ALERT	**06-MH-SK005**	HVAC Piping Wall Mounted Fan Coil Detail Revisions	2018-08-10
06 ALERT	**06-MH-SK006**	HVAC Piping Wall Mounted Fan Coil Detail Revisions	2018-08-10
08 D'IBERVILLE	**08-MP-SK001**	D'Iberville Centre Level 300 Condensate Pipe Sizing	2018-08-10

ATTACHMENTS

.1 Specifications:
- .1 23 81 23 – Computer Room Air Conditioning

.2 Drawings:

01-MC-SK001
01-MC-SK002
01-MDP-SK001
01-MDH-SK002
01-MH–SK008
01-MH-SK009
01-MH-SK010
01-MH-SK011
01-MH-SK012
01-MH-SK013
01-MH-SK014
01-MH-SK015
01-MP-SK006

01-MP-SK007
01-MP-SK008
01-MP-SK009
01-MP-SK010
01-MP-SK011
01-MV-SK006
01-MV-SK007
01-MV-SK008
01-MV-SK009
02-MH-SK001
02-MP-SK001
02-MP-SK002
02-MV-SK001
03-MP-SK001
05-MC-SK001
05-MDH-SK001
05-MDP-SK001
05-MDV-SK001
05-MH-SK001
05-MP-SK002
05-MV-SK001
05-MV-SK002
05-MV-SK003
06-MH-SK004
06-MH-SK005
06-MH-SK006
08-MP-SK001

END

PART 1 GENERAL

1.1 RELATED REQUIREMENTS

.1 Section 01 33 00 – Submittal Procedures.

.2 Section 01 91 13 - General Commissioning Requirements.

.3 Section 01 74 21 – Construction/Demolition Waste Management and Disposal.

.4 Section 23 05 00 – Common Work Results – Mechanical.

.5 Section 23 05 01 – Facility Mechanical Commissioning – General.

.6 Section 23 05 02 – Facility Commissioning – Mechanical.

1.2 REFERENCE STANDARDS

.1 American National Standards Institute/American Society of Heating, Refrigeration and Air-Conditioning Engineers (ANSI/ASHRAE)

.1 ANSI/ASHRAE 52.2-2007, Method of Testing General Ventilation Air-Cleaning Devices for Removal Efficiency by Particulate Size.

.2 ANSI/ASHRAE 127-2007, Method of Testing for Rating Computer and Data Processing Room Unitary Air-Conditioners.

.2 ASTM International (ASTM)

.1 ASTM C547-11, Specification for Mineral Fiber Pipe Insulation.

.3 CSA Group (CSA)

.1 CSA B52-05(R2009), Mechanical Refrigeration Code.

.2 CAN/CSA-C656-05(R2010), Performance Standard for Single Package Central Air-Conditioners and Heat Pumps.

1.3 ACTION AND INFORMATIONAL SUBMITTALS

.1 Submit in accordance with Section 01 33 00 - Submittal Procedures.

.2 Product Data:

.1 Submit manufacturer's instructions, printed product literature and data sheets for air conditioning components and accessories and include product characteristics, performance criteria, physical size, finish and limitations.

.3 Shop Drawings:

.1 Submit drawings stamped and signed by professional engineer registered or licensed in Nova Scotia.

.2 Indicate on drawings:

.1 Major components and accessories including sound power levels of units.

.2 Type of refrigerant used.

1.4 MAINTENANCE MATERIALS SPECIAL TOOLS AND SPARE PARTS

.1 Provide maintenance data for incorporation into manual specified in Section 01 33 00 -

Submittals.

.2 Maintenance materials to include:

.1 Spare parts for one (1) year of operation.

1.5 CLOSEOUT SUBMITTALS

.1 Submit in accordance with Section 01 78 00 - Closeout Submittals.

.2 Operation and Maintenance Data: submit operation and maintenance data for air conditioning components for incorporation into manual.

PART 2 PRODUCTS

2.1 GENERAL

.1 The existing electronics room in the Telecom/MCTS Building contains three (3) 5 ton DX cooling Liebert Challenger Units, complete with Humidification and reheat. Three outdoor condensing units serve the indoor units.

.2 Provide dismantling, relocation and reinstallation of the CRAC units in their entirety (plenums, drain lines, and cold water lines, controls, accessories, etc.) to new locations within Level 100 as per new work plans.

.3 Provide new components unable to be reused.

.4 Dismantling, relocating and reassembly shall be done in accordance with manufacturer instructions. Only one unit can be taken offline and relocated at a time, and the other two units shall remain in operation.

.5 Performance:

.1 Capacity:

.1 Airflow: 1321 L/s
.2 Total Cooling: 17.8 kW
.3 Humidification: 5.0 kg/hr / 4.8 kW
.4 Electric Reheat: 15.0 kW 2-stage
.5 Filters: 100mm High Efficiency Merv 11
.6 Refrigerant: R-407C

.6 Electrical

.1 Available electrical power: 120V, 1 Phase 60 Hz and 600V/3/60.
.2 Controls: 120V, 1 phase, 60 Hz. Provide in separate conduit from power wiring.
.3 Electrical Components: CSA approved.

.7 Controls: Provide monitoring points as per controls drawings.

.8 Trial Usage:

.1 Owner may use CRAC units for test purposes prior to acceptance and commencement of warranty period.
.2 Supply labour, materials and instruments required for tests.

2.2 SERVICES OF FACTORY REPRESENTATIVE

.1 Contractor shall arrange to have services of the manufacturer's trained representative for CRAC units at the time of start-up.

.2 Contractor shall check out the entire installation, including condensing unit and controls.

.3 A factory trained technician shall start the CRAC units into operation and shall make all necessary test and adjustments to have said equipment running to their and to the Departmental Representative's satisfaction.

.4 Manufacturer's representative shall conduct demonstration and commissioning tests and submit a written report. Notify Departmental Representative with a letter stating that the installation has been checked and adjusted and is ready to turn over to the Owner. Guarantee period shall start upon receipt of the report.

PART 3 EXECUTION

3.1 INSTALLATION

.1 Dismantling, relocation and reassemble on site shall be by Mechanical Contractor. Work shall be phase to maintain two CRAC units operational at all times.

.1 Make all required piping, ductwork, and electrical connections to all inlets and outlets recommended by CRAC unit manufacturer. Manufacturer to certify installation.

.2 Run drain line from condensate pump to terminate over nearest floor drain.

.3 Maintain clearances as indicated or if not indicated, as recommended by manufacturer for operation, servicing and maintenance without disruption of operation of any other equipment/system. Do not deviate from required service and maintenance clearances.

.4 Mount unit level. Provide a neoprene pad for vibration isolation under each unit.

.5 Provide Field wiring of all CRAC controls and sensors as required.

.6 Provide pressure testing per manufacturer's recommendations.

.7 Provide a low noise package for each compressor as per manufacturer's recommendations. Sound insulation shall reduce the level of sound emitted from the compressor. The package shall consist of a 9.5 mm closed cell polymeric 72 - 136 kg/m3 density compressor sound jacket that encloses the compressor. Additional 12 mm, closed cell polymeric 48 - 128 kg/m3 density sound deadening material shall be affixed to the underside of the Superior Service Access Panel located above the compressor and attached to the inner side of the compressor compartment panels that face the hot and cold aisles. All sound deadening material shall be non-shedding and located outside the air stream.

.8 Provide new high efficiency Merv 11, 4" filters.

3.2 EQUIPMENT PREPARATION

.1 Provide services of manufacturer's field engineer to set and adjust equipment for operation as specified.

3.3 CLEANING

.1 Progress Cleaning: clean in accordance with Section 01 74 11 - Cleaning.

.1 Leave Work area clean at end of each day.

.2 Final Cleaning: upon completion remove surplus materials, rubbish, tools and equipment in accordance with Section 01 74 11 - Cleaning.

.3 Waste Management: separate waste materials for recycling reuse in accordance with Section 01 74 21 – Construction/Demolition Waste Management and Disposal.

.1 Remove recycling containers and bins from site and dispose of materials at appropriate facility.

3.4 PROTECTION

.1 Protect installed products and components from damage during construction.

.2 Repair damage to adjacent materials caused by computer room air conditioning installation.

3.2 COMMISSIONING

.1 Building Commissioning is a requirement of this project in order to comply with sections of Division 01 – General Requirements. A Commissioning Agent has been engaged and will provide all systems commissioning in conjunction with all trade contractors. The Commission Agent will provide a Commissioning Plan with commissioning start-up and test procedure sheets to be performed and completed by the various trade contractors.

.2 Manufacturers representative to provide the following:

.1 Start up and adjustment services.
.2 Commissioning of CRAC control sequencing.
.3 Commissioning and Certification of installation.
.4 Carry out on-site performance verification tests.
.5 Demonstration of all safety devices in presence of owner’s representative.
.6 Provide one (1) day, on-site training session to staff to demonstrate operation and maintenance.

.3 Provide Departmental Representative at least 48 hours notice prior to inspections, tests, and demonstrations. Submit written report of inspections and test results. Report shall include static verification, pre-functional testing, and functional testing documentation.

END

This Addendum and all Addenda amends and forms an integral part of the Bidding and Contract documents and shall be read in conjunction with the same.

PART 1 SPECIFICATION REFERENCE

Item 1.1 SECTION 26 05 00 – COMMON WORK RESULTS ELECTRICAL

.1 Revise colour coding table included under item 2.7 as follows:
- .1 Wiring up to 600V to be Orange.
- .2 Telephone to be Blue/White.
- .3 Mechanical controls to be Green.

PART 2 DRAWING REFERENCE

Item 2.1 DRAWING 01-EP–101 ELECTRICAL POWER CABOT WEST LEVEL 100 & 200 NEW WORK

.1 Supply and install three (3) direct connections (2#12 RW90 + #12Cu. bond, 21mmC) to Unit Heaters, UH-2, located in Carpentry Shop 1101D, Storage 1101B and Mechanical Area 1101A. Circuit from panelboard P1A-10 and provide a TOL switch mounted adjacent each unit.

.2 Supply and install two (2) direct connections (2#12 RW90 + #12Cu. bond, 21mmC) to Cabinet Heaters, labelled CH1-17 and CH1-18 located in Entry 2001 and Entry Vestibule 1, respectively. Circuit from panelboard P1A-12 and provide a TOL switch flush mounted in wall above each unit.

.3 Revise Exhaust Fan, EF1-11, located in Boardroom 2029 to be EF1-16, circuited P1A-3 and located adjacent VAV1-2.13.

.4 Revise Exhaust Fan, EF1-11, located in Male Washroom 2020 to be circuited from P1A-5 and located adjacent grid line intersection 9y & 3x.

.5 Supply and install one (1) additional 15A, 120V direct connection to Pre-Action System, PA01-1, located in Mechanical Room 1101A for air compressor circuit. Circuit from new 1P, 15A breaker, panel P1A-12, 2#12 AWG + #12Cu. bond, 21mmC.

.6 Supply and install three (3) additional fire alarm connections to Pre-Acton System PA01-1, located in Mechanical Room 1101A c/w addressable interface relays for the following functions:
- .1 Alarm Signal.
- .2 Trouble Signal.
- .3 Detection Loop Signal.

.7 Revise location of humidifier HUM1-1 in Mechanical Room 1101A to be adjacent grid line intersection 6x & 19y.

Item 2.2 DRAWING 01-EP-102 ELECTRICAL POWER CABOT WEST LEVEL 300 NEW WORK

.1 Supply and install one (1) direct connection (2#12 RW90 + #12Cu. bond, 21mmC) to Unit Heater, UH-3, located in Mechanical Mezzanine 3110C. Circuit from panelboard P1D-13 and provide a TOL switch mounted adjacent the unit.

.2 Supply and install one (1) direct connection (2#12 RW90 + #12Cu. bond, 21mmC) to Cabinet Heater, CH1-20, located in Stair 1. Circuit from panelboard P1D-13 and provide a TOL switch flush mounted above unit.

.3 Revise location of Humidifier, HUM1-7, located in Mechanical Mezzanine 3110C to be adjacent grid line 7y, between grid lines 3x & 4x.

Item 2.3 DRAWING 01-EP-103 ELECTRICAL POWER CABOT CENTRAL LEVEL 100 NEW WORK

.1 Supply and install two (2) direct connections (2#12 RW90 + #12Cu. bond, 21mmC) to Cabinet Heaters, CH1-8 and CH1-7, located in Stair 1 and Stair 8, respectively. Circuit from panelboard P1B-16 and provide a TOL switch flush mounted above each unit.

.2 Supply and install eight (8) 15A, 120V direct connections to VAV boxes located throughout simulator rooms as indicated below. Circuit new VAV boxes from new 1P, 15A breaker P1B-38 and provide a toggle switch adjacent each unit for local disconnecting means:

.1 VAV1-1.13 Meeting Room 1201 (adjacent Simulator 1201A).
.2 VAV1-1.14 Meeting Room 1201 (adjacent Simulator 1203F).
.3 VAV1-1.15 Corridor 1203 (adjacent Simulator 1203F).
.4 VAV1-1.16 Corridor 1203 (adjacent Simulator 1203B).
.5 VAV1-1.17 Corridor 1203 (adjacent Simulator 1203E).
.6 VAV1-1.18 Simulator 1203A (centred in room).
.7 VAV1-1.19 Simulator 1205C (adjacent Corridor 1205).
.8 VAV1-1.20 Corridor 1205 (adjacent Simulator 1205D).

.3 Supply and install one (1) 40A, 208V, single-phase direct connection (3#10 AWG + #10Cu. bond, 21mmC) to new condensing unit CU1-1 located exterior Simulator Room 1205. Circuit from new 3P, 40A breaker in panelboard P1B-40,42 and provide one (1) 60A, 208V, single-phase non-fusible disconnect switch mounted adjacent unit for local disconnecting means.

Item 2.4 DRAWING 01-EP-104 ELECTRICAL POWER CABOT CENTRAL LEVEL 200 NEW WORK

.1 Supply and install two (2) direct connections (2#12 RW90 + #12Cu. bond, 21mmC) to Cabinet Heaters, CH1-18 and CH1-19, located in Entry Vestibule 1 and Entry Vestibule 2, respectively. Circuit from panelboard P1B-36 and provide a TOL switch flush mounted above each unit.

Item 2.5 DRAWING 01-EP-105 ELECTRICAL POWER CABOT CENTRAL LEVEL 300 NEW WORK

.1 Supply and install one (1) direct connection (2#12 RW90 + #12Cu. bond, 21mmC) to Cabinet Heater, CH1-20, located in Stair 1. Circuit from panelboard P1D-13 and provide a TOL switch flush mounted above unit.

.2 Supply and install one (1) direct connection (2#12 RW90 + #12Cu. bond, 21mmC) to Unit Heater, UH-2, located in Mechanical Room 3116. Circuit from panelboard P1D-13 and provide a TOL switch mounted adjacent unit.

.3 Revise location of Humidifier HUM1-8, located in Mechanical Room 3116 to be adjacent grid lines 6y & 12x.

Item 2.6 DRAWING 01-EP-106 ELECTRICAL POWER CABOT CENTRAL LEVEL 400 NEW WORK

.1 Supply and install one (1) direct connection (2#12 RW90 + #12Cu. bond, 21mmC) to Unit Heater, UH-2, located in Mechanical Room 4116. Circuit from panelboard P1D-15 and provide a TOL switch mounted adjacent unit.

.2 Supply and install one (1) additional 15A, 120V direct connection to Pre-Action System, PA01-4, located in Mechanical Room 4114 for air compressor circuit. Circuit from new 1P, 15A breaker, panel P1D-17, 2#12 AWG + #12Cu. bond, 21mmC.

.3 Supply and install three (3) additional fire alarm connections to Pre-Acton System PA01-1, located in Mechanical Room 4114 c/w addressable interface relays for the following functions:

.1 Alarm Signal.

.2 Trouble Signal.

.3 Detection Loop Signal.

.4 Supply and install one (1) 15A, 208V, single-phase direct connection to ceiling mounted evaporator unit CC1-4.01 located in Server Room 4115. Provide 2#12 AWG + #12Cu. bond, 21mmC from exterior condensing unit CU1-1 to power indoor evaporator unit and provide a toggle switch mounted adjacent unit for local disconnecting means.

Item 2.7 DRAWING 01-EP-107 ELECTRICAL POWER CABOT EAST LEVEL 100 NEW WORK

.1 Supply and install five (5) direct connections (2#12 RW90 + #12Cu. bond, 21mmC) to Cabinet Heaters, CH1-6, CH1-5, CH1-9, CH1-2 and CH1-1, located in Stair 2, Stair 9 (note CH1-5 not previously not shown on plans), East Tunnel, Stair 3 and Dishwash 1706B, respectively. Circuit from panelboard P1C-66 and provide a TOL switch flush mounted above each unit.

.2 Supply and install three (3) direct connections (2#12 RW90 + #12Cu. bond, 21mmC) to Unit Heaters, UH-2, located in Mechanical Room 1403F, Mechanical Room 1403C (note unit heater symbol shown not previously labelled) and Electrical Room 1403D. Circuit from panelboard P1C-68 and provide a TOL switch mounted adjacent each unit.

.3 Supply and install one (1) additional 15A, 120V direct connection to Pre-Action System, PA01-2, located in Storage 1504D for air compressor circuit. Circuit from new 1P, 15A breaker, panel P1C-70, 2#12 AWG + #12Cu. bond, 21mmC.

.4 Supply and install three (3) additional fire alarm connections to Pre-Acton System PA01-2, located in Storage 1504D c/w addressable interface relays for the following functions:
   .1 Alarm Signal.
   .2 Trouble Signal.
   .3 Detection Loop Signal.

Item 2.8 DRAWING 01-EP-108 ELECTRICAL POWER CABOT EAST LEVEL 200 NEW WORK

.1 Supply and one (1) direct connection (2#12 RW90 + #12Cu. bond, 21mmC) to Cabinet Heater, CH1-20, located in Entry Vestibule #3. Circuit from panelboard P1C-68 and provide a TOL switch flush mounted above unit.

.2 Supply and one (1) direct connection (2#12 RW90 + #12Cu. bond, 21mmC) to Unit Heater, UH-1, located in Mechanical Room 2802C. Circuit from panelboard P1C-68 and provide a TOL switch flush mounted above unit.

.3 Supply and install one (1) 15A, 208V, single-phase direct connection (2#12 AWG + #12Cu. bond, 21mmC) to new Wall Mounted Fan Coil, WM1-1.01 located in Garbage/Recycling 1401. Circuit from panelboard P1C-72 and provide a toggle switch adjacent unit for local disconnecting means.

Item 2.9 DRAWING 01-EP-109 ELECTRICAL POWER CABOT EAST LEVEL 300 NEW WORK

.1 Supply and install two (2) direct connections (2#12 RW90 + #12Cu. bond, 21mmC) to Cabinet Heaters, CH1-21 and CH1-22, located in Stair 2 and Stair 3. Circuit from panelboard P1E-11 and provide a TOL switch flush mounted above each unit.

.2 Supply and install two (2) direct connections (2#12 RW90 + #12Cu. bond, 21mmC) to Unit Heaters, UH-2, located in Mechanical Room 3152 and Mechanical Room 3148. Circuit from panelboard P1E-11 and provide a TOL switch mounted adjacent each unit.

.3 Delete one (1) disconnect switch located in Mechanical Room 3148 adjacent 100A splitter.

.4 Delete one (1) 30kVA dry-type transformer located in Mechanical Room 3148.

.5 Supply and install one (1) additional 15A, 120V direct connection to Pre-Action System, PA01-3, located in Storage 3138 for air compressor circuit. Circuit from new 1P, 15A breaker, panel P1E-13, 2#12 AWG + #12Cu. bond, 21mmC.

.6 Supply and install three (3) additional fire alarm connections to Pre-Acton System PA01-3, located in Storage 3138 c/w addressable interface relays for the following functions:
   .1 Alarm Signal.
   .2 Trouble Signal.
   .3 Detection Loop Signal.

.7 Revise location of Humidifier, HUM1-9, located in Mechanical Room 3152 to be adjacent Panelboard P1E.

Item 2.10 DRAWING 01-EP-110 ELECTRICAL POWER CABOT EAST LEVEL 400 NEW WORK

.1 Supply and install two (2) direct connections (2#12 RW90 + #12Cu. bond, 21mmC) to Unit Heaters, UH-1 and UH-2, located in Mechanical Room 4132 and Mechanical Room 4150A, respectively. Circuit from panelboard P1E-13 and provide a TOL switch mounted adjacent each unit.

Item 2.11 DRAWING 01-E-602 ELECTRICAL CABOT SCHEDULES

.1 Revise breaker serving pump P1-1A to be 3P, 40A (motor size increased to 11.19kW).

.2 Revise breaker serving pump P1-1B to be 3P, 40A (motor size increased to 11.19kW).

.3 Revise breaker serving pump P1-3A to be 3P, 25A (motor size decreased to 7.46kW).

.4 Revise breaker serving pump P1-3B to be 3P, 25A (motor size decreased to 7.46kW).

.5 Revise breaker and feeder serving pump P1-4A to be 3P, 60A and 3#10 + #10 Cu. bond, 21mmC, respectively (motor size increased to 18.65kW).

.6 Revise breaker and feeder serving pump P1-4B to be 3P, 60A and 3#10 + #10 Cu. bond, 21mmC, respectively (motor size increased to 18.65kW).

.7 Revise breaker serving pump P1-5A to be 3P, 15A (motor size decreased to 5.59kW).

.8 Revise breaker serving pump P1-5B to be 3P, 15A (motor size decreased to 5.59kW).

.9 Provide combination magnetic starters c/w control transformer (control transformer not required for 120V pumps), 2 N.O. & 2 N.C. auxiliary contacts, hand-off-auto selector switch and LED running light for the following pumps:

.1 P1-9.

.2 P1-10.

.3 P1-11.

.4 P1-12.

.10 Supply and install one (1) 15A, 600V, 3-phase direct connection (3#12 AWG + #12Cu. bond, 21mmC) to new pump P1-14A located in Cabot Boiler Room 1403C. Circuit from new 3P, 15A breaker in panel ‘P1’. Pumps shall be controlled by variable speed drive supplied and installed by mechanical and wired by electrical.

.11 Supply and install one (1) 15A, 600V, 3-phase, direct connection (3#12 AWG + #12Cu. bond, 21mmC) to new pump P1-14B located in Cabot Boiler Room 1403C. Circuit from new 3P, 15A breaker in panel ‘P1’. Pumps shall be controlled by variable speed drive supplied and installed by mechanical and wired by electrical.

Item 2.12 DRAWING 01-E-603 ELECTRICAL CABOT SCHEDULES & DETAILS

.1 Revise voltage and phase indicated for VAV1-4.09 and VAV1-4.10 to be 120V, sinlge-phase.
.2 Delete reference to full load amps (FLA) indicated in new VAV box schedule.

Item 2.13 DRAWING 01-E-605 ELECTRICAL CABOT SCHEDULES AND DETAILS

.1 Revise breakers serving condensing units fed from panelboard P1C as indicated below:
  .1 CND1-1 to be 2P, 15A.
  .2 CND1-2 to be 2P, 40A.
  .3 CND1-3 to be 2P, 15A.
  .4 CND1-4 to be 2P, 15A.
  .5 CND1-5 to be 2P, 30A.
.2 Supply and install one (1) 30A, 208V, single-phase, NEMA 1 non-fused disconnect switch mounted adjacent each condensing unit and evaporator unit, CND1-1 through CND1-5 and EVAP1-1 through EVAP1-5 (ten (10) total).

Item 2.14 DRAWING 02-EP-101 ELECTRICAL POWER ARCTIC LEVEL 100 & 200 NEW WORK

.1 Revise location of Fan Coil, FC2-1.02, located in Corridor to be located in Galley Storage.

Item 2.15 DRAWING 03-EP-103 ELECTRICAL POWER GREAT LAKES LEVEL 100 & 200 NEW WORK

.1 Revise label on Pump, P3-2, located in Mechanical Room D112 to be P3-2A.
.2 Supply and install one (1) direct connection to Condensate Pump, P-COND2, adjacent VFC3-2.03. Circuit from panelboard P3A-23,25.

Item 2.16 DRAWING 03-EP-602 ELECTRICAL PACIFIC/GREAT LAKES SCHEDULES & DETAILS

.1 All references to Great Lakes in detail 2 shall read Pacific.
.2 All references to Pacific in detail 3 shall read Great Lakes.
.3 Supply and install one (1) 15A, 600V, 3-phase direct connection (3#12 AWG + #12Cu. bond, 21mmC) to new pump P3-1C, located in Mechanical Room D112. Pump shall be controlled by variable speed drive, supplied and installed by mechanical and wired by electrical.
.4 Supply and install one (1) 15A, 600V, 3-phase, direct connection (3#12 AWG + #12Cu. bond, 21mmC) to new pump P3-3, located in Mechanical Room D112. Pump shall be controlled by variable speed drive, supplied and installed by mechanical and wired by electrical.
.5 Supply and install one (1) 15A, 600V, 3-phase, direct connection (3#12 AWG + #12Cu. bond, 21mmC) to new pump P3-4, located in Mechanical

Room D112. Pump shall be controlled by variable speed drive supplied nad installed by mechanical and wired by electrical.

Item 2.17 DRAWING 04-EP-103 ELECTRICAL POWER MIRAMICHI LEVEL 100 & 200 NEW WORK

.1 Revise drawing reference note 4, adjacent VFC4-1.01 to be note 2.
.2 Add drawing reference note 1 to drawing adjacent FC4-1.06.

Item 2.18 DRAWING 05-EP-101 ELECTRICAL POWER TELC/MCTS 100 & 200 NEW WORK

.1 Supply and install two (2) additional 15A, 120V direct connections to Pre-Action System, PA05-1, located in Telecom Workstations CC100 for air compressor circuit and control circuit. Circuit from new 1P, 15A breakers, panel P5B-16 & 18, 2#12 AWG + #12Cu. bond, 21mmC.
.2 Supply and install three (3) additional fire alarm connections to Pre-Acton System PA05-1, located in Telecom Workstations CC100 c/w addressable interface relays for the following functions:
  .1 Alarm Signal.
  .2 Trouble Signal.
  .3 Detection Loop Signal.
.3 Existing indoor floor standing Liebert A/C units (‘CRAC-2e’ & ‘CRAC-3e’) located in MCTS Server Room CC108, adjacent grid line intersection 2 & Cc shall be re-located as follows:
  .1 CRAC-2e re-located to Storage Room CC103. Extend existing 3#10 AWG + #10Cu. bond, 21mmC to new location.
  .2 CRAC-3e re-located to MCTS Server Room CC108 to wall common Workshop CC107 (parallel grid line 1). Extend existing 3#10 AWG + #10Cu. bond, 21mmC to suit new location.

Item 2.19 DRAWING 05-EP-102 ELECTRICAL POWER TELC/MCTS LEVEL 300 & ATTIC NEW WORK

.1 Revise attic drawing note 4 to reference a 30A disconnect switch.
.2 Supply and install two (2) additional 15A, 120V direct connections to Pre-Action System, PA05-2, located in MCTS Radio Operations CC302 for air compressor circuit and control circuit. Circuit from new 1P, 15A breakers, panel P5B-20 & 22, 2#12 AWG + #12Cu. bond, 21mmC.
.3 Supply and install three (3) additional fire alarm connections to Pre-Acton System PA05-2, located in MCTS Radio Operations CC302 c/w addressable interface relays for the following functions:
  .1 Alarm Signal.
  .2 Trouble Signal.
  .3 Detection Loop Signal.

.4 Supply and install one (1) 15A, 120V, direct connection to trap primer valve located in Corridor outside Women's Washroom CC316. Circuit from panel P5B-24, 2#12 AWG + #12Cu. bond, 21mmC.

Item 2.20 DRAWING 05-EP-104 ELECTRICAL POWER MACKENZIE LEVEL 300 & ATTIC NEW WORK

.1 Delete one (1) 60A disconnect switch located adjacent 100A splitter.

Item 2.21 DRAWING 06-EP-101 ELECTRICAL POWER ALERT LEVEL 100, 200 & 300 NEW WORK

.1 Supply and install one (1) additional 15A, 120V direct connection to Pre-Action System, PA06-1, located in Stock/Storage FF116 for air compressor circuit. Circuit from new 1P, 15A breaker, panel P6A-19, 2#12 AWG + #12Cu. bond, 21mmC.

.2 Supply and install three (3) additional fire alarm connections to Pre-Acton System PA06-1, located in Stock/Storage FF116 c/w addressable interface relays for the following functions:

.1 Alarm Signal.
.2 Trouble Signal.
.3 Detection Loop Signal.

Item 2.22 DRAWING 06-E-601 ELECTRICAL ALERT SCHEDULES & DETAILS

.1 Supply and install six (6) 15A, 600V, 3-phase direct connections (3#12 AWG + #12Cu. bond, 21mmc) to the pumps indicated below. Each pump shall be controlled by a variable speed drive supplied and installed by mechanical, wired by electrical.

.1 P6-1A located in Mechanical Room FF111A.
.2 P6-1B located in Mechanical Room FF111A.
.3 P6-1C located in Mechanical Room FF111A.
.4 P6-2A located in Mechanical Room FF111A.
.5 P6-2B located in Mechanical Room FF111A.
.6 P6-3 located in Mechanical Room FF111A.

END

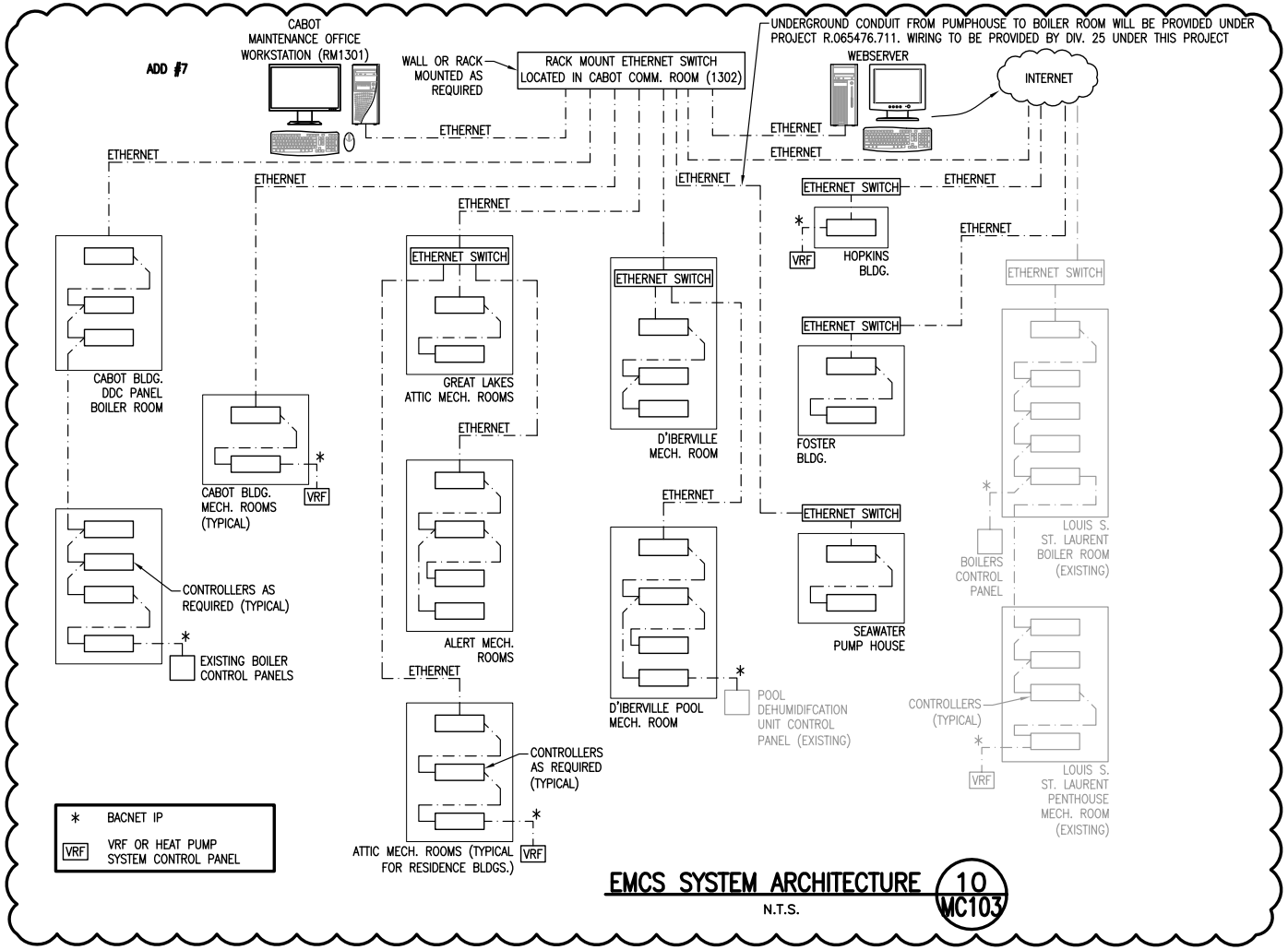

EMCS SYSTEM ARCHITECTURE (10 / MC103)

N.T.S.

Reference Drawing: 01–MC–103

Addendum #: 7

Public Works and Government Services Canada / Travaux publics et Services gouvernementaux Canada	project / projet: CANADIAN COAST GUARD COLLEGE, SYDNEY, NS MECHANICAL & SPRINKLER UPGRADES	Drawing title / Titre du dessin: EMCS SYSTEM ARCHITECTURE	designed / conçu: ACJC — date: 08/10/18
Tender / Soumission: Joan Muise — 08/10/18			drawn / dessiné: SNH — date: 08/10/18
PWGSC Project Manager / Administrateur de projets TPSGC			approved / approuvé: RJC — date: 08/10/18
		project number / no. du projet: R.065476.700	drawing no. / no. du dessin: 01–MC–SK001

PWGSC L2 (2004)

E-DRM/GDD-E: 538447

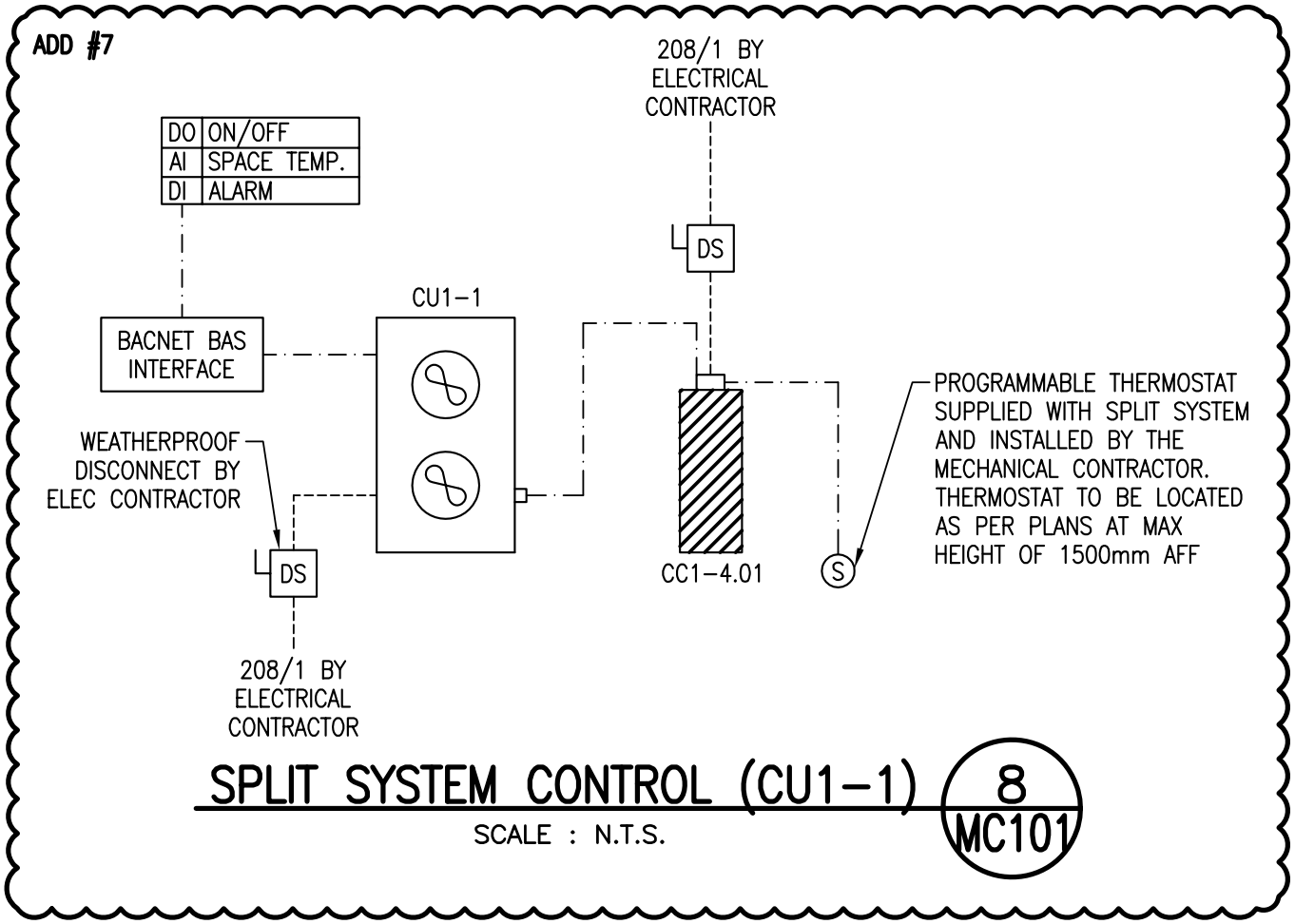

SPLIT SYSTEM CONTROL (CU1-1)

8
MC101

SCALE : N.T.S.

Reference Drawing: 01-MP-106

Addendum #: 7

Public Works and Government Services Canada / Travaux publics et Services gouvernementaux Canada	project / projet: CANADIAN COAST GUARD COLLEGE, SYDNEY, NS MECHANICAL & SPRINKLER UPGRADES	Drawing title / Titre du dessin: 01 – CABOT SPLIT SYSTEM CONTROL	designed / conçu: MJM — date: 08/03/18
Tender / Soumission: Joan Muise — 08/03/18			drawn / dessiné: MAC — date: 08/03/18
			approved / approuvé: RJK — date: 08/03/18
PWGSC Project Manager / Administrateur de projets TPSGC		project number / no. du projet: R.065476.700	drawing no. / no. du dessin: 01-MC-SK002

PWGSC L1 (2004)

E-DRM/GDD-E: 538447

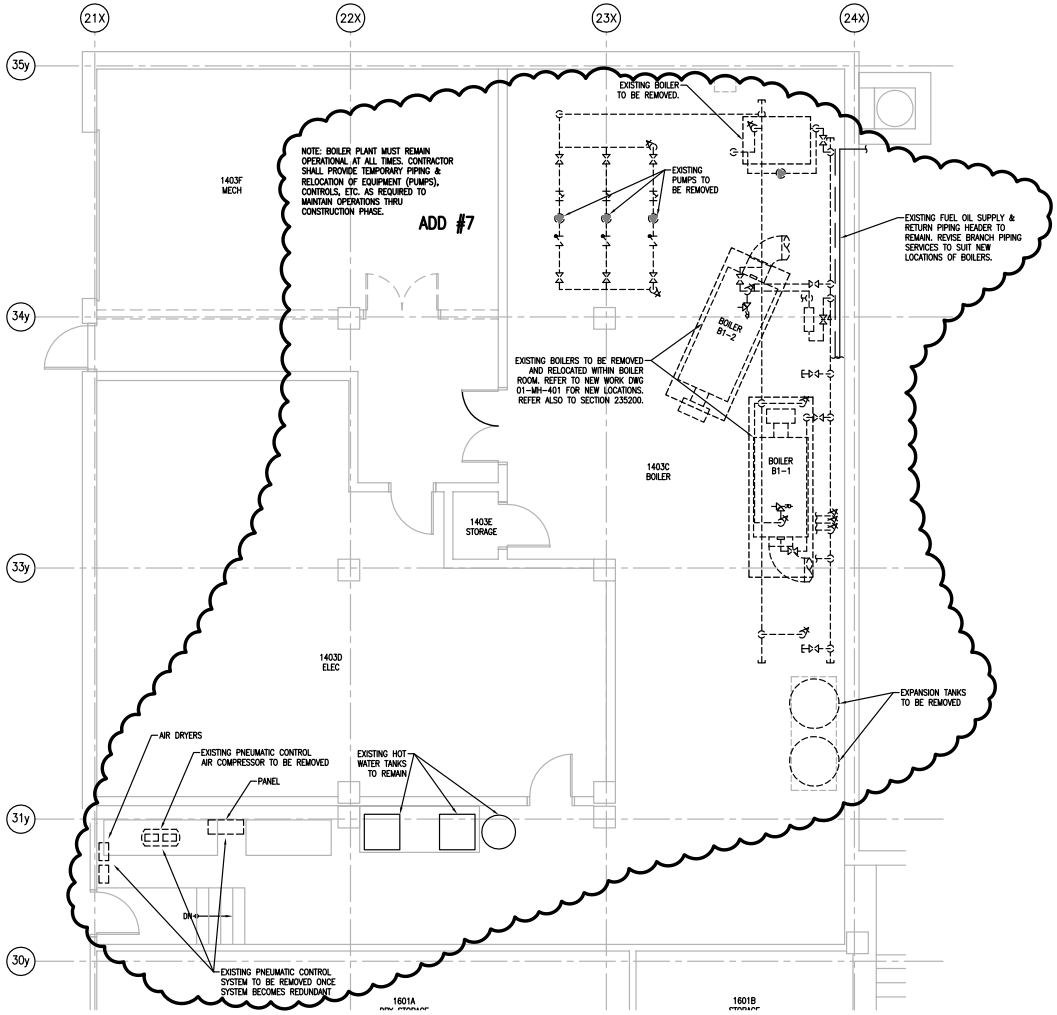

Reference Drawing: 01-MDH-401

Addendum #: 7

Public Works and Government Services Canada / Travaux publics et Services gouvernementaux Canada	project / projet: CANADIAN COAST GUARD COLLEGE, SYDNEY, NS MECHANICAL & SPRINKLER UPGRADES	Drawing title / Titre du dessin: 01 – CABOT LEVEL 100 BOILER ROOM 1403C PIPING DEMOLITION REVISIONS	designed / conçu: RJK	date: 08/10/18
Tender / Soumission: Joan Muise			drawn / dessiné: RAFH	date: 08/10/18
PWGSC Project Manager / Administrateur de projets TPSGC		project number / no. du projet: R.065476.700	approved / approuvé: RJK	date: 08/10/18
			drawing no. / no. du dessin: 01-MDH-SK002	

PWGSC L2 (2004)

E-DRM/GDD-E: 538447

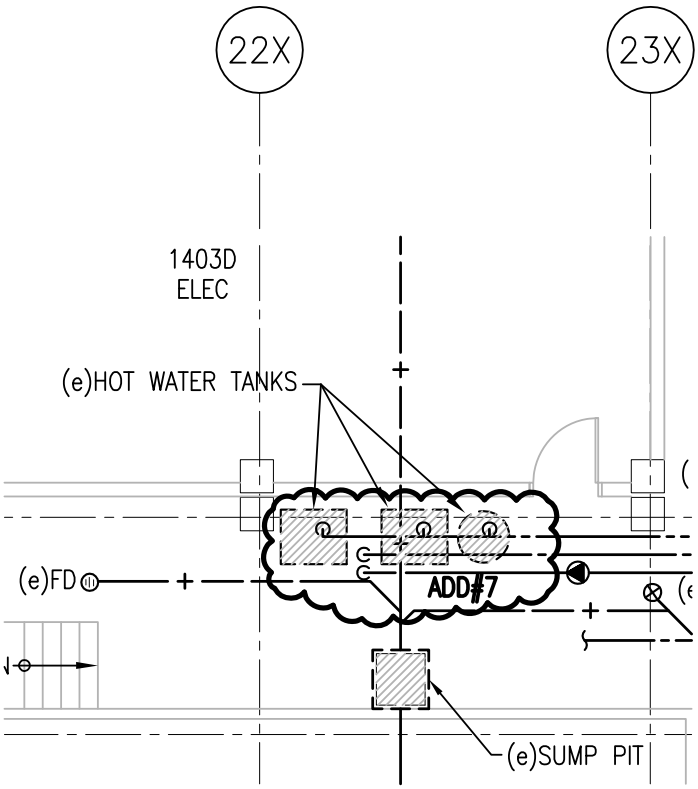

Reference Drawing: 01–MDP–107

Addendum #: 7

Public Works and Government Services Canada / Travaux publics et Services gouvernementaux Canada	Drawing title / Titre du dessin: 1403C BOILER EXIST. HOT WATER TANK CONNECTIONS	designed / conçu: MJM	date: 08/10/18
project / projet: CANADIAN COAST GUARD COLLEGE, SYDNEY, NS MECHANICAL & SPRINKLER UPGRADES		drawn / dessiné: SNH	date: 08/10/18
		approved / approuvé: DAM	date: 08/10/18
	Tender / Soumission: Joan Muise, PWGSC Project Manager	08/10/18, Administrateur de projets TPSGC	
	project number / no. du projet: R.065476.700	drawing no. / no. du dessin: 01–MDP–SK001	

PWGSC L1P (2004)

E–DRM/GDD–E: 538447

01 – CABOT BUILDING – PUMP SCHEDULE

MARK	LOCATION	APPLICATION	PUMP TYPE	FLOW RATE (L/s)	HEAD (kPa)	MOTOR (kW)	ELECT. DATA	MOTOR RPM	STARTER	STARTER LOCATION	CONTROLS	VIBRATION ISOLATORS TYPE	VIBRATION ISOLATORS SPRING	VIBRATION ISOLATORS STATIC DEF.	COMMENTS
P1–1A P1–1B	CABOT MECH ROOM 1403F	COOLING PRIMARY LOOP	VERTICAL INLINE	60.5	120 ADD #7	11.19	575/3	1200	VSD	PUMP MOUNTED	EMCS	NSN	–	–	PUMPS ARE SIZED FOR FUTURE HEAT PUMP. PUMPS ARE DUPLEX, ONE PUMP IS STANDBY.
P1–2A P1–2B	CABOT MECH ROOM 1403F	HEAT PUMP COOLING (EVAP)	VERTICAL INLINE	60.5	60	11.19	575/3	1800	VSD	PUMP MOUNTED	EMCS	NSN	–	–	PUMPS ARE SIZED FOR FUTURE HEAT PUMP. PUMPS ARE DUPLEX, ONE PUMP IS STANDBY.
P1–3A P1–3B	CABOT BOILER ROOM 1403C	HEAT PUMP HEATING (COND)	VERTICAL INLINE	70.3	60	7.46	575/3	1200	VSD	PUMP MOUNTED	EMCS	NSN	–	–	PUMPS ARE SIZED FOR FUTURE HEAT PUMP. PUMPS ARE DUPLEX, ONE PUMP IS STANDBY.
P1–4A P1–4B	CABOT BOILER ROOM 1403C	HWS PRIMARY/CAMPUS LOOP ADD #7	VERTICAL INLINE	70.3	200	18.65	575/3	1800	VSD	PUMP MOUNTED	EMCS	NSN	–	–	PUMPS ARE SIZED FOR FUTURE HEAT PUMP. PUMPS ARE DUPLEX, ONE PUMP IS STANDBY.
P1–5A P1–5B	CABOT BOILER ROOM 1403C	SECONDARY HTG. CABOT BUILDING	VERTICAL INLINE	15.8	200	5.59	575/3	1800	VSD	PUMP MOUNTED	EMCS	NSN	–	–	PUMPS OPERATE TOGETHER TO ACHIEVE DESIGN FLOW RATE OF 31.6L/s @ 200kPa ADD #7
P1–6	CABOT BOILER ROOM 1403C	COOLING CAMPUS LOOP	VERTICAL INLINE	29.0	230	11.19	575/3	1800	VSD	PUMP MOUNTED	EMCS	NSN	–	–	–
P1–7	CABOT BOILER ROOM 1403C	COOLING CAMPUS LOOP	VERTICAL INLINE	29.0	230	11.19	575/3	1800	VSD	PUMP MOUNTED	EMCS	NSN	–	–	PUMP IS STANDBY FOR BOTH P1–6 & P1–8
P1–8	CABOT BOILER ROOM 1403C	SECONDARY COOL'G CABOT BUILDING	VERTICAL INLINE	31.5	150	7.46	575/3	1800	VSD	PUMP MOUNTED	EMCS	NSN	–	–	–
P1–9	CABOT BOILER ROOM 1403C	CABOT DOM. HOT WATER	INLINE	1.8	50	0.19	120/1	1800	MAGNETIC	REFER TO DIV. 26 DWGS	EMCS, INDIR. DOM. WATER HTG.	–	–	–	–
P1–10	CABOT BOILER ROOM 1403C	CABOT DOM. HOT WATER	INLINE	1.8	50	0.19	120/1	1800	MAGNETIC	REFER TO DIV. 26 DWGS	EMCS, INDIR. DOM. WATER HTG.	–	–	–	–
P1–11	CABOT BOILER ROOM 1403C	BOILER B1–1	VERTICAL INLINE	15.8	45	1.50	575/3	1200	MAGNETIC	REFER TO DIV. 26 DWGS	EMCS, BOILER B1–1	NSN	–	–	–
P1–12	CABOT BOILER ROOM 1403C	BOILER B1–2	VERTICAL INLINE	21.5	45	1.50	575/3	1200	MAGNETIC	REFER TO DIV. 26 DWGS	EMCS, BOILER B1–2	NSN	–	–	–
P1–13A P1–13B	CABOT BOILER ROOM 1403C	GLYCOL HEATING CABOT BUILDING	VERTICAL INLINE	9.5	200	3.73	575/3	1800	VSD	PUMP MOUNTED	ADD #7 EMCS	NSN	–	–	PUMPS OPERATE TOGETHER TO ACHIEVE DESIGN FLOW RATE OF 19.0L/s @ 200kPa ADD #7
P1–14A P1–14B	CABOT BOILER ROOM 1403C CABOT BOILER ROOM 1403C	HTWS PRIMARY	VERTICAL INLINE	13.9	200	5.59	575/3	1800	VSD	PUMP MOUNTED	ADD #7 EMCS	NSN	–	–	PUMPS OPERATE TOGETHER TO ACHIEVE DESIGN FLOW RATE OF 27.8L/s @ 200kPa

Reference Drawing: 01–MH–602

Addendum #: 7

Public Works and Government Services Canada / Travaux publics et Services gouvernementaux Canada

Tender / Soumission

Joan Muise

PWGSC Project Manager / Administrateur de projets TPSGC

project / projet: CANADIAN COAST GUARD COLLEGE, SYDNEY, NS MECHANICAL & SPRINKLER UPGRADES

Drawing title / Titre du dessin: 01 – CABOT BUILDING PUMP SCHEDULE

designed / conçu	RJK	date 08/10/18
drawn / dessiné	RAFH	date 08/10/18
approved / approuvé	RJK	date 08/10/18

project number / no. du projet: R.065476.700

drawing no. / no. du dessin: 01–MH–SK008

01 – CABOT – EXPANSION TANK SCHEDULE

ADD #7

MARK	SYSTEM	STYLE	VOLUME (L)	ACCEPT. (L)	OPERATING PRESSURE (kPa)	DIMENSIONS HEIGHT (mm)	DIMENSIONS DIAMETER (mm)	REMARKS
ET1–1A	HWS SYSTEM	VERTICAL FULL ACCEPTANCE BLADDER–TYPE	1200	1200	1200	2181	762	–
ET1–1B	HWS SYSTEM	VERTICAL FULL ACCEPTANCE BLADDER–TYPE	800	800	1200	2076	610	–
ET1–2	CHILLED WATER SYSTEM	VERTICAL DIAPHRAGM–TYPE	127	42.8	1033	1143	350	–
ET1–3	PRIMARY COOLING LOOP	VERTICAL DIAPHRAGM–TYPE	82	42.8	1033	762	350	–
ET1–4	GLYCOL HTG. LOOP	VERTICAL FULL ACCEPTANCE BLADDER–TYPE	800	800	1200	2076	610	–

Reference Drawing: 01–MH–602

Addendum #: 7

Public Works and Government Services Canada / Travaux publics et Services gouvernementaux Canada

Tender / Soumission

Joan Muise

PWGSC Project Manager / Administrateur de projets TPSGC

project / projet

CANADIAN COAST GUARD COLLEGE, SYDNEY, NS MECHANICAL & SPRINKLER UPGRADES

Drawing title / Titre du dessin

01 – CABOT EXPANSION TANK SCHEDULE

project number / no. du projet: R.065476.700

designed / conçu	RJK	date 08/10/18
drawn / dessiné	RAFH	date 08/10/18
approved / approuvé	RJK	date 08/10/18

drawing no. / no. du dessin: 01–MH–SK009

PWGSC L1 (2004)

E–DRM/GDD–E: 538447

01 – CABOT – AIR SEPARATOR SCHEDULE

ADD #7

MARK	SYSTEM	STYLE	FLOW (L/s)	TANGENTIAL OPENING SIZES (mm)	OPERATING PRESSURE (kPa)	DIMENSIONS		REMARKS
						HEIGHT (mm)	DIAMETER (mm)	
AS1–1	PRIMARY HTG. LOOP	VORTEX FLOOR–MOUNTED	70.3	200	850	1400	750	c/w STRAINER
AS1–2	CHILLED WATER SYSTEM	VORTEX FLOOR–MOUNTED	60.5	200	850	1400	750	c/w STRAINER
AS1–3	PRIMARY CLG. LOOP	VORTEX FLOOR–MOUNTED	60.5	200	850	1400	750	c/w STRAINER
AS1–4	GLYCOL HTG. LOOP	VORTEX FLOOR–MOUNTED	18.9	100	850	800	500	c/w STRAINER

Reference Drawing: 01–MH–602

Addendum #: 7

Public Works and Government Services Canada / Travaux publics et Services gouvernementaux Canada

Tender / Soumission

Joan Muise

PWGSC Project Manager / Administrateur de projets TPSGC

project / projet

CANADIAN COAST GUARD COLLEGE, SYDNEY, NS MECHANICAL & SPRINKLER UPGRADES

Drawing title / Titre du dessin

01 – CABOT AIR SEPARATOR SCHEDULE

project number / no. du projet: R.065476.700

designed / conçu	RJK	date	08/10/18
drawn / dessiné	RAFH	date	08/10/18
approved / approuvé	RJK	date	08/10/18

drawing no. / no. du dessin: 01–MH–SK010

PWGSC L1 (2004)

E–DRM/GDD–E: 538447

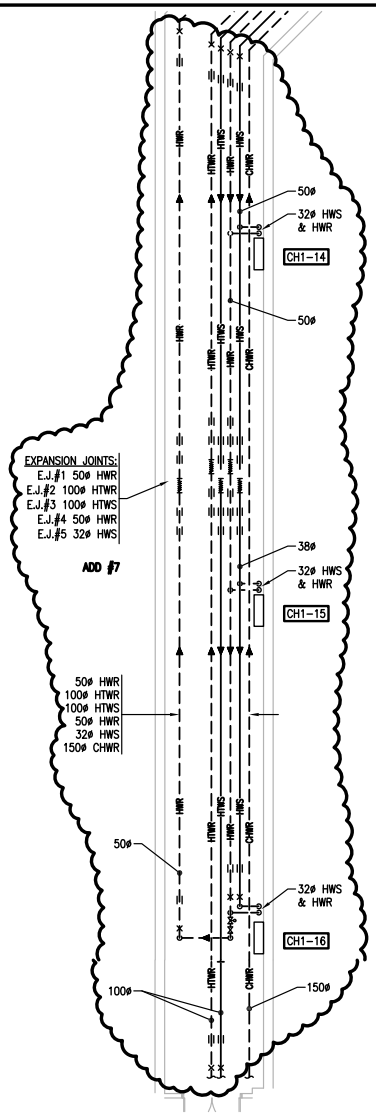

HVAC PIPING – WEST TUNNEL NEW WORK .

SCALE: 1:150

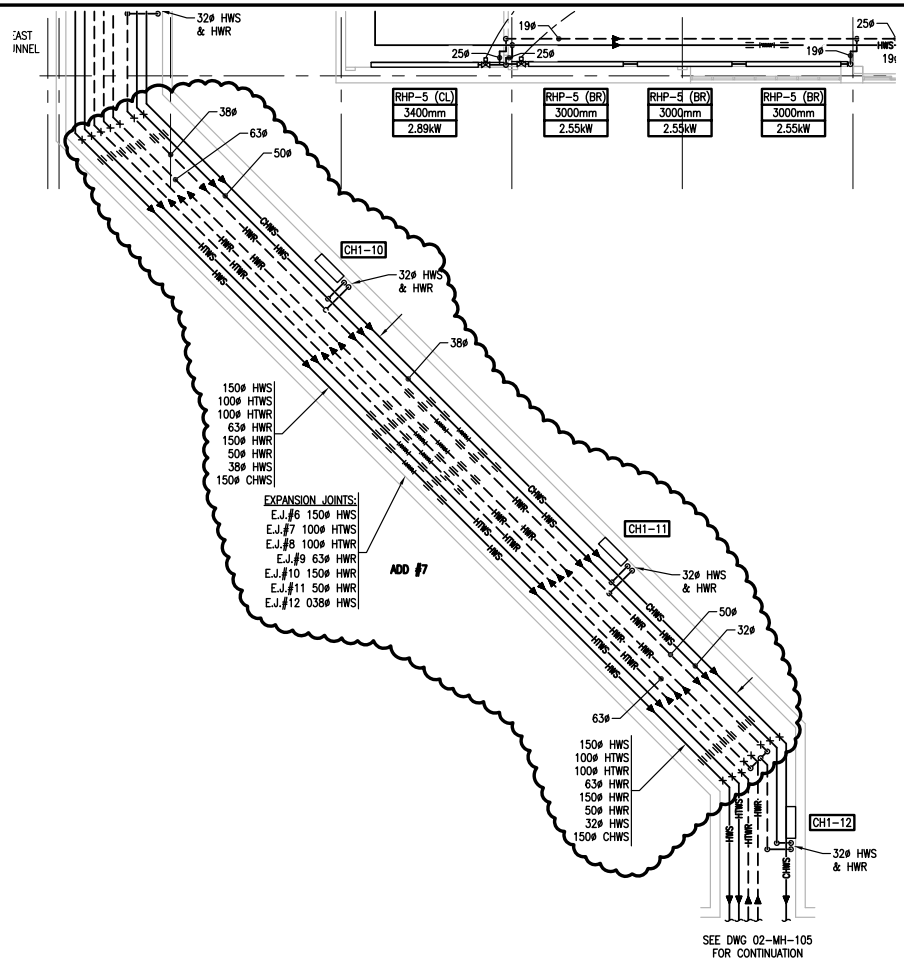

HVAC PIPING – EAST TUNNEL NEW WORK

SCALE: 1:150

Reference Drawing: 01-MH-111

Addendum #: 7

Public Works and Government Services Canada / Travaux publics et Services gouvernementaux Canada	project / projet: CANADIAN COAST GUARD COLLEGE, SYDNEY, NS MECHANICAL & SPRINKLER UPGRADES	Drawing title / Titre du dessin: 01 – CABOT LEVEL 100 WEST & EAST TUNNELS EXPANSION JOINTS	designed / conçu: RJK — date: 08/10/18
Tender / Soumission: Joan Muise			drawn / dessiné: RAFH — date: 08/10/18
PWGSC Project Manager / Administrateur de projets TPSGC		project number / no. du projet: R.065476.700	approved / approuvé: RJK — date: 08/10/18
			drawing no. / no. du dessin: 01-MH-SK011

PWGSC L2 (2004)

E-DRM/GDD-E: 538447

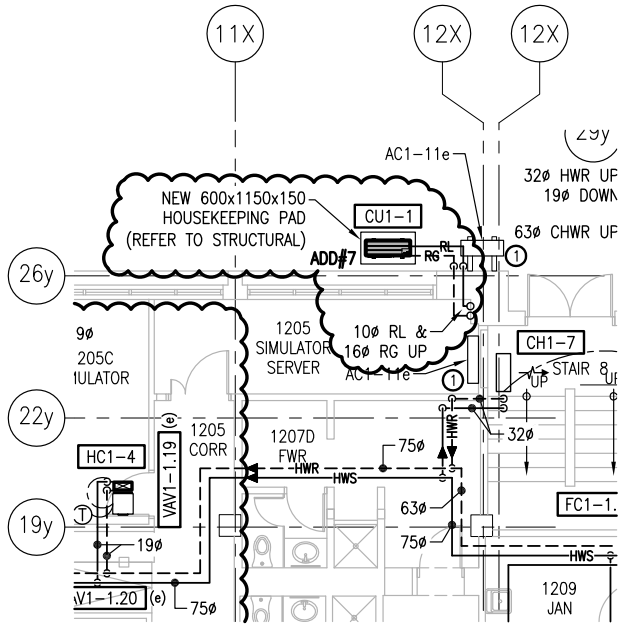

LEVEL 100

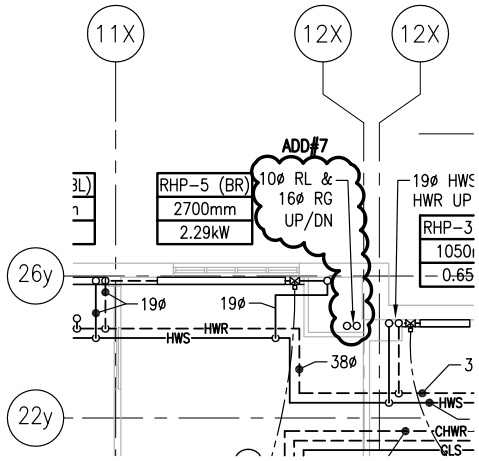

LEVEL 300

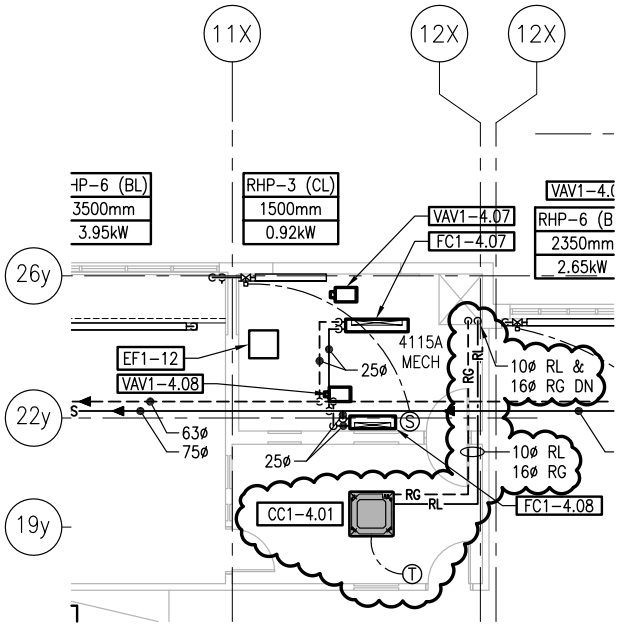

LEVEL 400

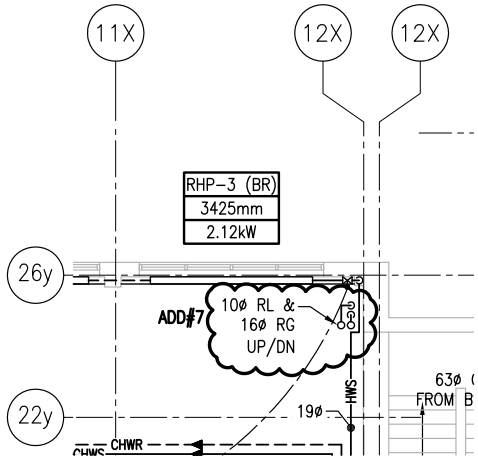

LEVEL 200

Reference Drawing: 01-MH-103, 01-MH-104, 01-MH-105, 01-MH-106

Addendum #: 7

SCALE : 1:100

0m 1m 2m 3m 4m 5m 6m 7m 8m 9m 10m

Public Works and Government Services Canada / Travaux publics et Services gouvernementaux Canada	project / projet: CANADIAN COAST GUARD COLLEGE, SYDNEY, NS MECHANICAL & SPRINKLER UPGRADES	Drawing title / Titre du dessin: 01 – CABOT CENTRAL SERVER RM 4115 SPLIT SYSTEM	designed / conçu: ACJC — date: 08/10/18
Tender / Soumission: Joan Muise			drawn / dessiné: MAC — date: 08/10/18
PWGSC Project Manager / Administrateur de projets TPSGC			approved / approuvé: RJK — date: 08/10/18
		project number / no. du projet: R.065476.700	drawing no. / no. du dessin: 01-MH-SK014

PWGSC L2 (2004)

E-DRM/GDD-E: 538447

ADD #7

01 – CABOT – HEATING COIL SCHEDULE

MARK	AREA SERVED	AIRFLOW (L/s)	COIL SIZE H x NTL (mm)	FACE AREA (m^2)	FACE VELOCITY (m/min)	EAT (°C)	LAT (°C)	COIL CAPACITY (kW)	WATER FLOW (L/s)	WATER PD (kPa)	AIR FRICTION (Pa)	COMMENTS
HC1–1	1201A SIMULATOR VAV–1.13(e)	140	AS REQUIRED	0.069	122.0	13.5	26.7	2.4	0.08	8.9	50	COIL DIMENSIONS TO SUIT EXISTING ZONE BOX
HC1–2	1203B SIMULATOR VAV–1.16(e)	94	AS REQUIRED	0.046	122.0	13.5	26.7	1.6	0.05	8.9	50	COIL DIMENSIONS TO SUIT EXISTING ZONE BOX
HC1–3	1203A SIMULATOR VAV–1.18(e)	230	AS REQUIRED	0.113	122.0	13.5	26.7	3.9	0.13	8.9	50	COIL DIMENSIONS TO SUIT EXISTING ZONE BOX
HC1–4	1205C SIMULATOR VAV–1.19(e)	185	AS REQUIRED	0.091	122.0	13.5	26.7	3.1	0.10	8.9	50	COIL DIMENSIONS TO SUIT EXISTING ZONE BOX

NOTES: SIZE COILS BASED ON 49°C EWT.

Reference Drawing: 01–MH–602

Addendum #: 7

Public Works and Government Services Canada / Travaux publics et Services gouvernementaux Canada

Tender / Soumission

Joan Muise

PWGSC Project Manager / Administrateur de projets TPSGC

project / projet

CANADIAN COAST GUARD COLLEGE, SYDNEY, NS MECHANICAL & SPRINKLER UPGRADES

Drawing title / Titre du dessin

01 – CABOT HEATING COIL SCHEDULE

project number / no. du projet: R.065476.700

designed / conçu	MJM	date 08/10/18
drawn / dessiné	MAC	date 08/10/18
approved / approuvé	RJK	date 08/10/18

drawing no. / no. du dessin: 01–MH–SK013

PWGSC L1 (2004)

E–DRM/GDD–E: 538447

01 – CABOT – SPLIT SYSTEM – INDOOR FAN COIL UNIT SCHEDULE

DESIGNATION	OUTDOOR UNIT	SERVING	TYPE	NOMINAL CAPACITY (kW)	AIRFLOW (L/s)	OUTDOOR AIR (L/s)	ESP (Pa)	COOLING			ELECTRICAL			CONNECTIONS			MAX SOUND LEVEL (dBA)	COMMENTS
								TOTAL CAP. (kW)	SENS. CAP. (kW)	EER	MCA	MOCP	VOLT/PH	LIQUID (mm)	SUCTION (mm)	DRAIN (mm)		
CC1–4.01	CU1–1	SERVER 4115	4–WAY CEILING CASSETTE	10.6	500	–	–	10.6	–	–	1.25 A	–	208/1	10	16	32	43	c/w CONDENSATE LIFT PUMP, WIRED THERMOSTAT, & MERV 10 FILTER

ADD #7

01 – CABOT – SPLIT SYSTEM – OUTDOOR CONDENSING UNIT SCHEDULE

DESIGNATION	NOMINAL CAPACITY (kW)	AIRFLOW (L/s)	COOLING			ELECTRICAL			FANS		COMPRESSORS			CONNECTIONS		WEIGHT (kg)	DIMENSIONS			MAX SOUND LEVEL (dBA)	COMMENTS
			TOTAL CAP. (kW)	SENS. CAP. (kW)	EER	MCA	MOCP	VOLT/PH	NO.	MOTOR (kW)	NO.	MOTOR (kW)	RPM	LIQUID (mm)	SUCTION (mm)		WIDTH (mm)	LENGTH (mm)	HEIGHT (mm)		
CU1–1	10.6	1,830	10.6	–	14.2	31 A	44 A	208/1	2	0.074	1	2.8	–	10	16	122	420	1050	1340	53	c/w SALT RESISTANT CONSTRUCTION, AIR INLET GUIDE

Reference Drawing: 01–MH–602

Addendum #: 7

Public Works and Government Services Canada / Travaux publics et Services gouvernementaux Canada	project / projet: CANADIAN COAST GUARD COLLEGE, SYDNEY, NS MECHANICAL & SPRINKLER UPGRADES	Drawing title / Titre du dessin: 01 – CABOT SPLIT SYSTEM SCHEDULES	designed / conçu: ACJC — date: 08/10/18
Tender / Soumission: Joan Muise			drawn / dessiné: MAC — date: 08/10/18
			approved / approuvé: RJK — date: 08/10/18
PWGSC Project Manager / Administrateur de projets TPSGC		project number / no. du projet: R.065476.700	drawing no. / no. du dessin: 01–MH–SK014

NOTE:
FAN COIL INSTALLATION OF ELECTRICAL, CONTROLS, PIPING & DRAIN CONNECTIONS TO ALLOW FOR ADEQUATE SPACE TO ACCESS UNIT SERVICE PANELS AND AIR FILTER REPLACEMENT.

ADD #7

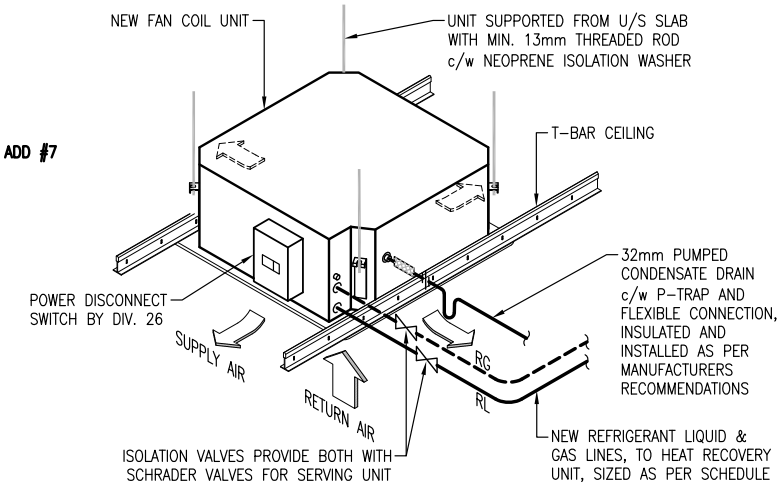

SPLIT SYSTEM DUCTLESS CASSETTE FAN COIL INDOOR UNIT

4 MH503

SCALE : N.T.S.

ADD #7

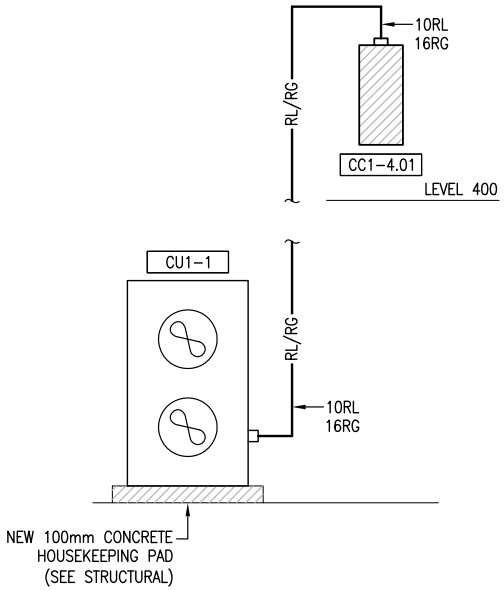

CU1-1 PIPING SCHEDULE

5 MH503

SCALE : N.T.S.

Reference Drawing: 01-MH-503

Addendum #: 7

Public Works and Government Services Canada / Travaux publics et Services gouvernementaux Canada	project / projet: CANADIAN COAST GUARD COLLEGE, SYDNEY, NS MECHANICAL & SPRINKLER UPGRADES	Drawing title / Titre du dessin: 01 - CABOT SPLIT SYSTEM DETAILS	designed / conçu: ACJC	date: 08/10/18
Tender / Soumission: Joan Muise			drawn / dessiné: MAC	date: 08/10/18
PWGSC Project Manager / Administrateur de projets TPSGC		project number / no. du projet: R.065476.700	approved / approuvé: RJK	date: 08/10/18
			drawing no. / no. du dessin: 01-MH-SK013	

PWGSC L2 (2004)

E-DRM/GDD-E: 538447

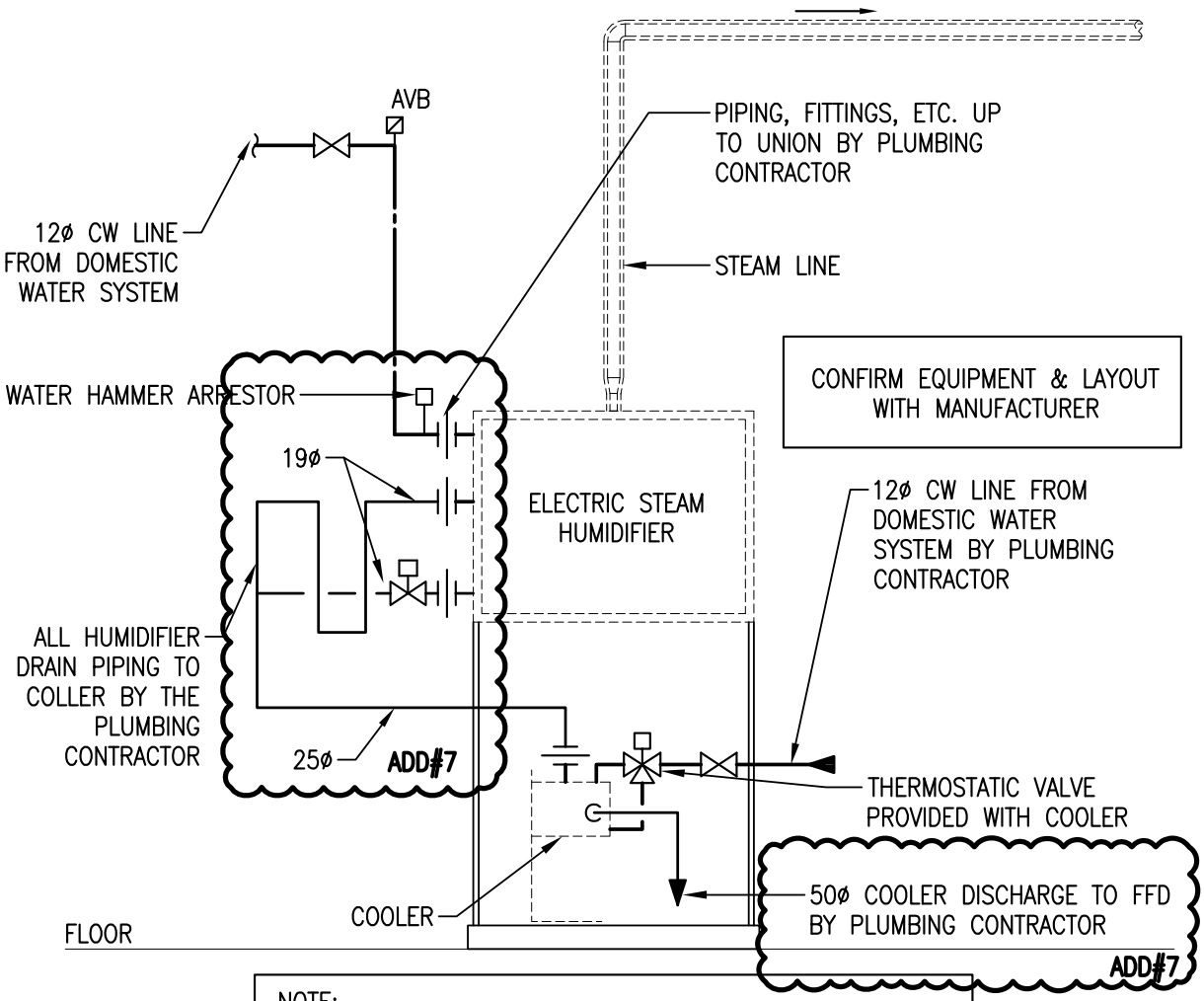

NOTE:
PLUMBING CONTRACTOR IS RESPONSIBLE FOR ALL PIPING AND DRAINAGE CONNECTIONS FOR DRAIN COOLER, DUCTWORK DRAINPAN, MANIFOLD DRAIN, STEAM DISCHARGE DRAIN, ETC. REFER TO DETAILS FOR EXTENT OF REQUIREMENTS

HUMIDIFIER PLUMBING DETAIL

8 / MP501

SCALE : N.T.S.

Reference Drawing: 01–MP–501

Addendum #: 7

Public Works and Government Services Canada / Travaux publics et Services gouvernementaux Canada	Drawing title / Titre du dessin: PIPE SIZING FOR HUMIDIFIER PIPING DETAIL	designed / conçu: MJM	date: 08/10/18
		drawn / dessiné: SNH	date: 08/10/18
project / projet: CANADIAN COAST GUARD COLLEGE, SYDNEY, NS MECHANICAL & SPRINKLER UPGRADES		approved / approuvé: DAM	date: 08/10/18
	Tender / Soumission: Joan Muise, PWGSC Project Manager	08/10/18, Administrateur de projets TPSGC	
	project number / no. du projet: R.065476.700	drawing no. / no. du dessin: 01–MP–SK006	

PWGSC L1P (2004)

E–DRM/GDD–E: 538447

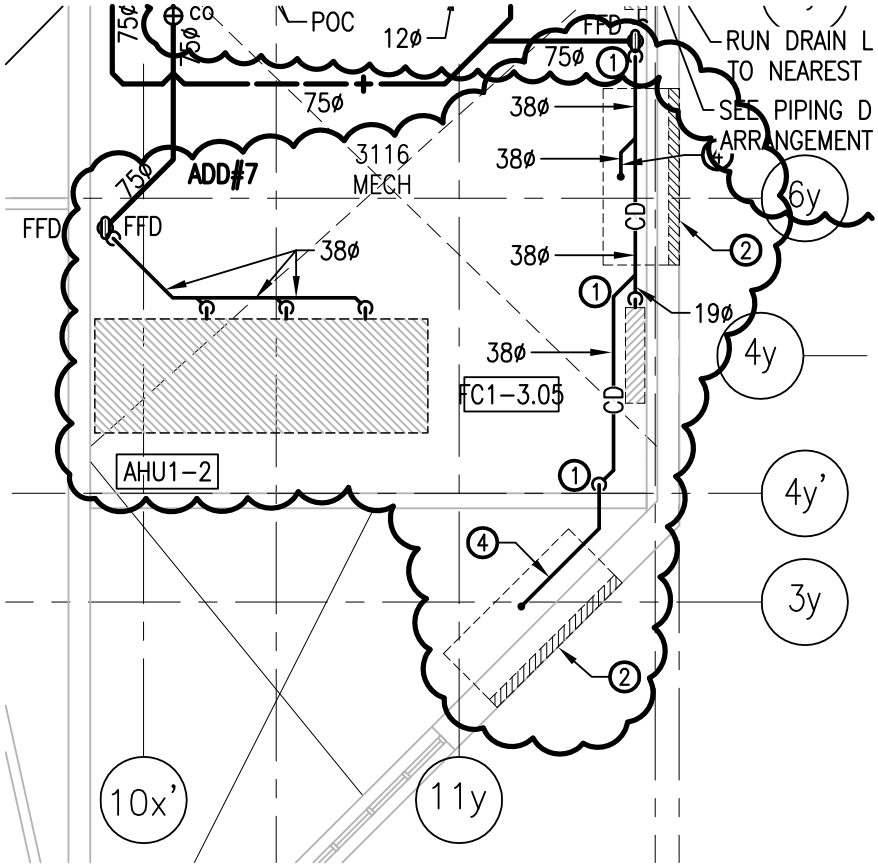

Reference Drawing: 01-MP-105

Addendum #: 7

Public Works and Government Services Canada / Travaux publics et Services gouvernementaux Canada	Drawing title / Titre du dessin: CABOT LEVEL 300 CONDENSATE PIPE SIZING	designed / conçu: MJM	date: 08/10/18
project / projet: CANADIAN COAST GUARD COLLEGE, SYDNEY, NS MECHANICAL & SPRINKLER UPGRADES		drawn / dessiné: SNH	date: 08/10/18
		approved / approuvé: DAM	date: 08/10/18
	Tender / Soumission: Joan Muise, PWGSC Project Manager	08/10/18, Administrateur de projets TPSGC	
	project number / no. du projet: R.065476.700	drawing no. / no. du dessin: 01-MP-SK007	

PWGSC L1P (2004)

E-DRM/GDD-E: 538447

GENERAL NOTES

1. CONTRACTOR TO ALLOW FOR MOUNTING OF EVAPORATORS IN ASSOCIATED FREEZER OR COOLER.
2. CONTRACTOR TO ALLOW FOR MOUNTING OF CONDENSING UNIT ABOVE FREEZER OR COOLER. CONDENSING UNIT IS TO BE STRUCTURALLY SUPPORTED FROM DECK ABOVE OR FROM ADJACENT STRUCTURE. STRUCTURAL FRAMING IS TO BE STAMPED BY A PROFESSIONAL ENGINEER AND A SHOP DRAWING SUBMITTED TO THE DEPARTMENTAL REPRESENTATIVE FOR REVIEW.
3. ALL WIRING FROM CONDENSING UNIT TO THE EVAPORATOR AND FROM THE CONDENSING UNIT TO THE WATER REGULATING VALVE IS THE RESPONSIBILITY OF THE MECHANICAL CONTRACTOR.
4. ENSURE ALL PENETRATIONS THROUGH THE FREEZER/COOLER WALLS ARE PROPERLY SEALED. CONTRACTOR TO CONSULT MANUFACTURER ON REQUIREMENTS FOR SEALING OF PENETRATIONS.
5. REFER TO DRAWING 01-MP-107 FOR CONDENSATE DRAINAGE REQUIREMENTS FROM EVAPORATORS.

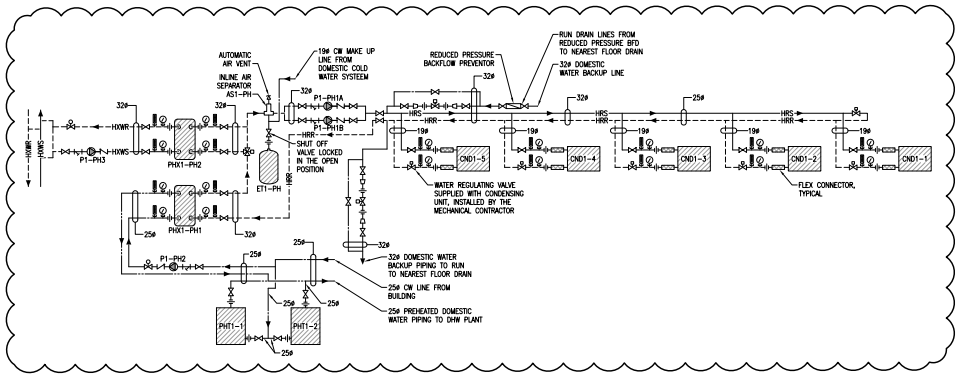

CABOT FREEZER/ COOLER HEAT RECOVERY PIPING SCHEMATIC (2 / MP401)

N.T.S.

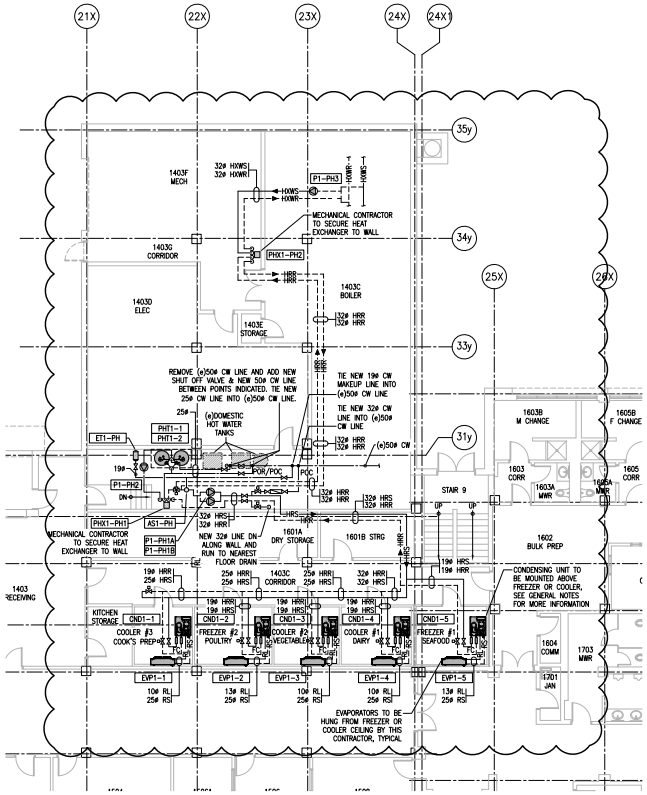

PLUMBING – CABOT WEST – LEVEL 100 – FREEZER/ COOLER PIPING LAYOUT (1 / MP401)

SCALE : 1:100

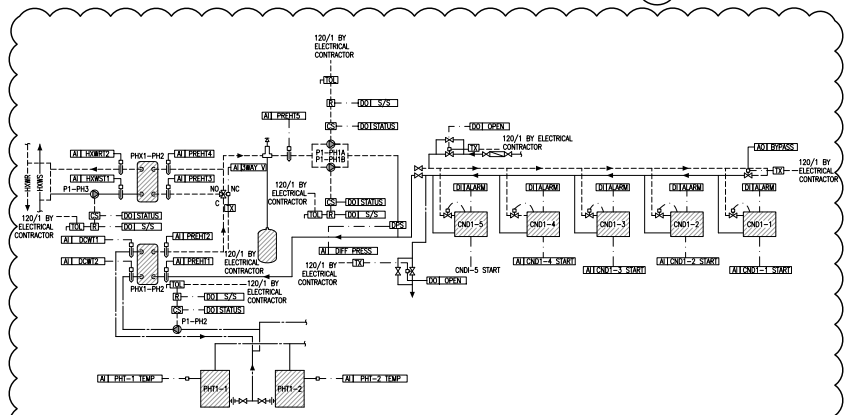

SEQUENCE

ON A SIGNAL THAT ANYONE OF THE CONDENSING UNITS, CND1-1 TO CND1-5, HAS STARTED, THE ASSOCIATED WATER REGULATING VALVE WILL OPEN AND PUMP, P1-PH1A OR P1-PH1B, AND PUMP, P1-PH2, WILL START. THE THREE WAY VALVE WILL START CLOSED TO HEAT EXCHANGER, PHX1-PH1. THE TEMPERATURE IN THE PREHEAT TANKS, PHT1-1 AND PHT1-2, WILL EACH BE MONITORED BY THEIR ASSOCIATED TEMPERATURE SENSOR.

IN THE EVENT THAT THE TEMPERATURE SENSOR, PREH T2, DETECTS A TEMPERATURE RISE ABOVE THE SETPOINT OF 29 DEG C (USER ADJUSTABLE) THE THREE WAY VALVE WILL BEGIN TO MODULATE OPEN AND PUMP, P1-PH3, WILL START AND PUMP, P1-PH2, WILL STOP. THE SYSTEM WILL REMAIN IN THIS STATE UNTIL THE TEMPERATURE IN ONE OF THE PREHEAT TANKS DROPS BELOW 20 DEG F.

WHEN THE PREHEAT TANK DROPS BELOW ITS SETPOINT AND THE SYSTEM IS ACTIVE, IT WILL START PUMP, P1-PH2, AND BEGIN TO MODULATE THE THREE WAY VALVE CLOSED.

THE DIFFERENTIAL PRESSURE SENSOR, DPS, WILL MONITOR THE SYSTEM PRESSURE. ON A RISE IN SYSTEM PRESSURE, AS DETECTED BY THE DIFFERENTIAL PRESSURE SENSOR, THE BYPASS VALVE WILL OPEN. ON A DROP IN SYSTEM PRESSURE, AS DETECTED BY THE DIFFERENTIAL PRESSURE SENSOR, THE BYPASS VALVE WILL CLOSE.

IN THE EVENT THAT THE THREE WAY IS FULLY OPEN AND THE RETURN WATER TEMPERATURE, AS SENSED BY PREH T5, CONTINUES TO RISE ABOVE THE SETPOINT AN ALAM WILL BE GENERATED, ALL THE PUMPS WILL BE SIGNALLED TO STOP, THE THREE WAY VALVE WILL CLOSE AND THE DOMESTIC WATER BACKUP SOLENOID VALVES WILL BE ENERGIZED OPEN. THE SYSTEM WILL CONTINUE IN THIS MODE UNTIL THE ALARM IS INVESTIGATED.

THE CURRENT SENSORS WILL MONITOR PUMP STATUS, IN THE EVENT OF AN ISSUE AN ALARM WILL BE SENT TO THE EMCS.

PUMPS, P1-PH1A AND P1-PH1B, WILL ALTERNATE ON A RUN TIME BASIS OF 300 HRS (USER ADJUSTABLE).

TEMPERATURE SENSORS, DCW T1, DCW T2, PREH T1, PREH T3, PREH T4, HXWS T1, AND HXWR T2, PROVIDE FEEDBACK OF SYSTEM TEMPERATURES TO THE USER.

IN THE EVENT THAT A CONDENDING UNIT STARTS AND THE MAIN SYSTEM PUMP DOES NOT START A SIGNAL WILL BE SENT TO START THE MAIN SYSTEM BACKUP PUMP. IF THE MAIN SYSTEM BACKUP PUMP DOES NOT START, THE SYSTEM WILL GO INTO ALARM AND THE DOMESTIC WATER BACKUP SYSTEM WILL BE ENERGIZED AS NOTED ABOVE.

IF FOR ANY REASON THE RETURN WATER TEMPERATURE, PREH T5, SENSES A TEMPERATURE MORE THAN 1 DEG C ABOVE SETPOINT THE SYSTEM WILL GO INTO ALARM AND THE DOMESTIC WATER BACKUP SYSTEM WILL BE ENERGIZED AS NOTED ABOVE.

IN THE EVENT THAT THE THREE WAY VALVE FAILS, IT SHALL FAIL OPEN TO HEAT EXCHANGER, PHX1-PH2.

CABOT FREEZER/ COOLER HEAT RECOVERY CONTROL (11 / MC103)

N.T.S.

Public Works and Government Services Canada / Travaux Publics et Services gouvernementaux Canada

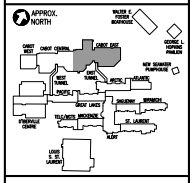

M&R ENGINEERING
5531 Cornwallis St. Halifax, NS, B3K 1B3
Tel: (902) 420-1393. Fax: (902) 423-9945
www.mrengca

GENERAL NOTES :

DO NOT SCALE THIS DRAWING FOR CONSTRUCTION PURPOSES. USE FIGURED DIMENSIONS AS NOTED.

THESE DRAWINGS ARE TO BE READ IN CONJUNCTION WITH SPECIFICATIONS AND GENERAL CONTRACTUAL CONDITIONS.

ALL DIMENSIONS AND CONDITIONS ARE TO BE VERIFIED ON SITE. ALL DISCREPANCIES ARE TO BE REPORTED TO THE DEPARTMENTAL REPRESENTATIVE AND AGREED UPON WITH THEM IN WRITING BEFORE PROCEEDING WITH WORKS.

INFORMATION ON THESE DRAWINGS IS TO BE USED FOR THIS PROJECT ONLY AND SHALL NOT BE USED FOR ANY OTHER PURPOSE.

Addendum #:07
Reference Drawing: 01-MP-401

project / projet
CANADIAN COAST GUARD COLLEGE
SYDNEY, NS
MECHANICAL & SPRINKLER UPGRADES

drawing / dessin
PLUMBING
CABOT WEST LEVEL 100
FREEZER/COOLER
HEAT RECOVERY PLAN
& SCHEMATICS

designed / conçu	MJM
date	08/10/18
drawn / dessiné	DJL
date	08/10/18
approved / approuvé	RJK
date	08/10/18
Tender / Soumission	Joan Muise 08/10/18
PWGSC Project Manager / Administrateur de projets TPSGC	
project number / no. du projet	R.065476.700
drawing no. / no. du dessin	01-MP-SK008

E-DRM/GDD-E: 538447

PWGSC B1 (2004)

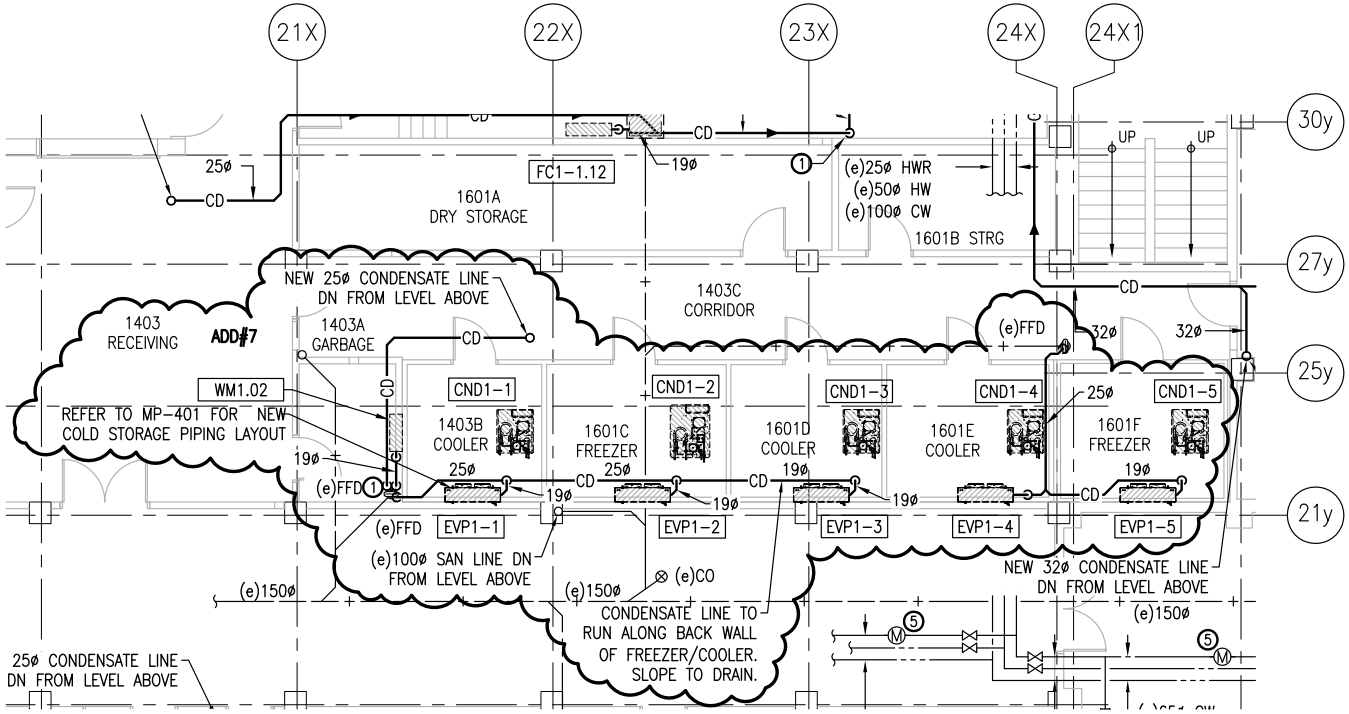

NOTE:
ENSURE PENETRATIONS THROUGH FREEZER/COOLER WALLS ARE SEALED AS PER MANUFACTURER'S RECOMMENDATIONS.

ADD#7

Reference Drawing: 01-MP-107

Addendum #: 7

Public Works and Government Services Canada / Travaux publics et Services gouvernementaux Canada	project / projet: CANADIAN COAST GUARD COLLEGE, SYDNEY, NS MECHANICAL & SPRINKLER UPGRADES	Drawing title / Titre du dessin: CABOT LEVEL 100 FREEZER/COOLER CONDENSATE PIPING	designed / conçu: MJM — date: 08/10/18
Tender / Soumission: Joan Muise — 08/10/18			drawn / dessiné: SNH — date: 08/10/18
PWGSC Project Manager / Administrateur de projets TPSGC			approved / approuvé: DAM — date: 08/10/18
		project number / no. du projet: R.065476.700	drawing no. / no. du dessin: 01-MP-SK009

PWGSC L2 (2004)

E-DRM/GDD-E: 538447

01 – CABOT – FREEZER/COOLER PLATE HEAT EXCHANGER SCHEDULE

ADD #7

DESIGNATION	LOCATION	APPLICATION	TYPE	HOT SIDE FLUID	HOT SIDE FLOW (L/s)	HOT SIDE INLET (°C)	HOT SIDE OUTLET (°C)	HOT SIDE MAX PD (kPa)	COLD SIDE FLUID	COLD SIDE FLOW (L/s)	COLD SIDE INLET (°C)	COLD SIDE OUTLET (°C)	COLD SIDE MAX PD (kPa)	TOTAL HEAT TRANSFER (kW)	DESIGN PRESSURE (kPa)	REMARKS
PHX1–PH1	1403C BOILER	DOMESTIC WATER HEATING	BRAZED	H_2O	0.5	35.8	29.4	24.3	H_2O	0.25	4.4	17.2	6.8	13.5	860	19# CONNECTIONS, SINGLE WALL, COPPER BRAZING, 316LSS
PHX1–PH2	1403F MECH	SEAWATER REJECTION	BRAZED	H_2O	0.5	35.8	29.4	24.3	H_2O	0.63	15	20.6	32	13.5	860	19# CONNECTIONS, SINGLE WALL, COPPER BRAZING, 316LSS

01 – CABOT – FREEZER/COOLER PUMP SCHEDULE

ADD #7

DESIGNATION	LOCATION	APPLICATION	PUMP TYPE	FLOW RATE (L/s)	HEAD (kPa)	MOTOR (kW)	ELECT. DATA	MOTOR RPM	STARTER	STARTER LOCATION	CONTROLS	VIBRATION ISOLATORS TYPE	VIBRATION ISOLATORS SPRING	VIBRATION ISOLATORS STATIC DEF.	COMMENTS
P1–PH1A	1403C BOILER	KITCHEN CONDENSING UNITS	INLINE	0.5	120	FRAC	120/1	3250	TOL	SEE ELEC	EMCS	–	–	–	PARALLEL PUMPS, ONE PUMP IS STAND–BY
P1–PH1B															
P1–PH2	1403C BOILER	DOMESTIC WATER PREHEAT	INLINE	0.25	36	FRAC	120/1	2940	TOL	SEE ELEC	EMCS	–	–	–	BRONZE BODY
P1–PH3	1403F BOILER	SEAWATER REJECTION	INLINE	0.63	60	FRAC	120/1	3300	TOL	SEE ELEC	EMCS	–	–	–	–

01 – CABOT – FREEZER/COOLER AIR SEPARATOR SCHEDULE

ADD #7

MARK	SYSTEM	STYLE	FLOW (L/s)	TANGENTIAL OPENING SIZES (mm)	OPERATING PRESSURE (kPa)	DIMENSIONS HEIGHT (mm)	DIMENSIONS DIAMETER (mm)	REMARKS
AS1–PH	KITCHEN CONDENSING UNITS	INLINE	0.5	32	1034	191	117	c/w EXPANSION TANK CONNECTION, BUILT IN AUTOMATIC AIR VENT, BRASS BODY, SS COALESCING MEDIUM

01 – CABOT – FREEZER/COOLER EXPANSION TANK SCHEDULE

ADD #7

MARK	SYSTEM	STYLE	VOLUME (L)	ACCEPT. (L)	OPERATING PRESSURE (kPa)	DIMENSIONS HEIGHT (mm)	DIMENSIONS DIAMETER (mm)	REMARKS
ET1–PH	FREEZERS/ COOLERS HEAT RECOVERY	HORIZONTAL DIAPHRAGM TYPE	3.8	7.6	860	325	200	–

01 – CABOT – PLUMBING EQUIPMENT SCHEDULE

PHT1–1 – DOMESTIC HOT WATER STORAGE TANK

DOMESTIC HOT WATER STORAGE TANK, 450L, CONSTRUCTED IN ACCORDANCE WITH THE REQUIREMENTS OF THE ASME BOILER AND PRESSURE VESSEL CODE AND COMPLETE WITH BAKED ENAMEL FINISH, MAGNESIUM SACRIFICIAL ANODE, 50mm (2") INLET AND OUTER WATER CONNECTIONS, HEAVY FOAM INSULATION, GLASS LINER OVER ENTIRE INNER SURFACE OF TANK, BRASS DRAIN VALVE. TANK SHALL MEET OR EXCEED THE STANDBY LOSS REQUIREMENTS OF ASHRAE, HAVE A WORKING PRESSURE OF 1034kPa (150psig) AND SHALL BE COMPLETELY ASSEMBLED. TANK IS TO BE COVERED BY A FIVE (5) YEAR LIMITED WARRANTY AGAINST LEAKS.

PHT1–2 – DOMESTIC HOT WATER STORAGE TANK

A.O SMITH COMMERCIAL DOMESTIC HOT WATER STORAGE TANK, MODEL: BV–120M, 119 GALLONS STORAGE CAPACITY, HEAVY FOAM INSULATED GLASS LINED, C/W BRASS DRAIN VALVE, AND RELIEF VALVE.

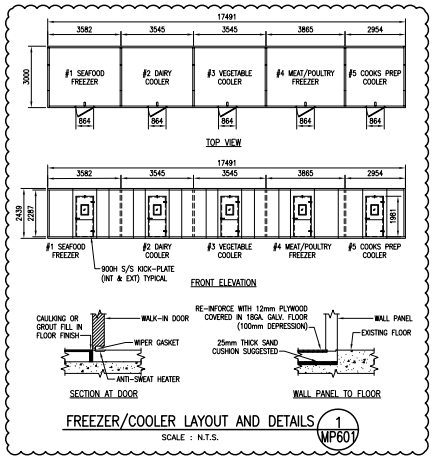

FREEZER/COOLER LAYOUT AND DETAILS 1 / MP601

SCALE : N.T.S.

01 – CABOT – FREEZER/COOLER EQUIPMENT SCHEDULE

COOKS PREP COOLER

CND1–1

CO–AXIAL WATER–COOLED HEREMTIC CONDENSING UNIT, PRE–ENGINEERED PACKAGE, SKID MOUNTED c/w RECEIVER WITH FUSIBLE PLUG AND LIQUID SHUTOFF VALVE, COPPER TUBING TO BE SECURED WITH CUSHION CLAMPS, ADJUSTABLE DUAL HIGH/LOW PRESSURE CONTROL, SUCTION SERVICE VALVE, SEALED LIQUID LINE FILTER AND SIGHT GLASS, SEALED NON–FUSED DISCONNECT WITH LOCKABLE HANDLE, SUCTION ACCUMULATOR, R404A, 10mm LIQUID LINE CONNECTION, 16mm SUCTION LINE CONNECTION, 13mm INLET AND DISCHARGE COOLING WATER CONNECTIONS, AND WATER REGULATING VALVE (FOR FIELD INSTALLATION). UNIT TO BE COMPLETE WITH EXTENDED 4 YEAR WARRANTY.

PERFORMANCE:
SUCTION TEMPERATURE – –2.6°C
CONDENSING TEMPERATURE – 40.5°C
ELECTRICAL – 0.56 kW, 6.8 MCA, 15 MOP, 208/1/60
ENTERING WATER – 29.4°C
FLOWRATE – 5.1 L/min
PRESSURE DROP – 8.3 kPa
SYSTEM CAPACITY – 2.39 kW

EVAP1–2

WALL MOUNTED, LOW PROFILE, EVAPORATOR c/w 9mm TUBING COIL, HEAVY GAUGE ALUMINUM CABINET, HINGED DRAIN PAN WITH 19MM DRAIN CONNECTION, FAN GUARDS, ECM MOTOR, 6 FPI, ELECTRONIC CONTROLLER (ELECTRIC DEFROST TIMER AND THERMOSTAT IN ONE COMPLETE WITH DEMAND DEFROST FUNCTIONALITY, EXPANSION VALVE, 12mm LIQUID LINE CONNECTION, 22mm SUCTION LINE CONNECTION, MOUNTING BRACKETS, AND FACTORY INSTALLED LIQUID LINE SOLENOID.

PERFORMANCE:
AIRFLOW – 953 L/s
EVAPORATOR TEMPERATURE – –2.28°C
BOX TEMPERATURE – 3°C
ELECTRICAL – 2 AMPS, 200 WATTS, 2.3 MCA, 15 MOP, 208/1/60

MEAT/POULTRY FREEZER

CND1–2

CO–AXIAL WATER–COOLED HEREMTIC CONDENSING UNIT, PRE–ENGINEERED PACKAGE, SKID MOUNTED c/w RECEIVER WITH FUSIBLE PLUG AND LIQUID SHUTOFF VALVE, COPPER TUBING TO BE SECURED WITH CUSHION CLAMPS, ADJUSTABLE DUAL HIGH/LOW PRESSURE CONTROL, SUCTION SERVICE VALVE, CRANKCASE HEATER, SEALED LIQUID LINE FILTER AND SIGHT GLASS, SEALED NON–FUSED DISCONNECT WITH LOCKABLE HANDLE, SUCTION ACCUMULATOR, R404A, 12mm LIQUID LINE CONNECTION, 22mm SUCTION LINE CONNECTION, 16mm INLET AND DISCHARGE COOLING WATER CONNECTIONS, AND WATER REGULATING VALVE (FOR FIELD INSTALLATION). UNIT TO BE COMPLETE WITH EXTENDED 4 YEAR WARRANTY.

PERFORMANCE:
SUCTION TEMPERATURE – –29.1°C
CONDENSING TEMPERATURE – 40.5°C
ELECTRICAL – 2.24 kW, 23 MCA, 40 MOP, 208/1/60
ENTERING WATER – 29.4°C
FLOWRATE – 8.0 L/min
PRESSURE DROP – 9.3 kPa
SYSTEM CAPACITY – 3.38 kW

EVAP1–2

WALL MOUNTED, LOW PROFILE, EVAPORATOR c/w 9mm TUBING COIL, HEAVY GAUGE ALUMINUM CABINET, HINGED DRAIN PAN WITH 19MM DRAIN CONNECTION, FAN GUARDS, ECM MOTOR, 6 FPI, ELECTRONIC CONTROLLER (ELECTRIC DEFROST TIMER AND THERMOSTAT IN ONE COMPLETE WITH DEMAND DEFROST FUNCTIONALITY, EXPANSION VALVE, 12mm LIQUID LINE CONNECTION, 22mm SUCTION LINE CONNECTION, MOUNTING BRACKETS, AND FACTORY INSTALLED LIQUID LINE SOLENOID.

PERFORMANCE:
AIRFLOW – 850 L/s
EVAPORATOR TEMPERATURE – –28.3°C
BOX TEMPERATURE – –22°C
ELECTRICAL – 1.2 AMPS, 120 WATTS, 1.4 MCA, 15 MOP, 208/1/60
DEFROST HEATERS – 8.2 AMPS, 1890 WATTS, 10.3 MCA, 15 MOP

VEGETABLE COOLER

CND1–3

CO–AXIAL WATER–COOLED HEREMTIC CONDENSING UNIT, PRE–ENGINEERED PACKAGE, SKID MOUNTED c/w RECEIVER WITH FUSIBLE PLUG AND LIQUID SHUTOFF VALVE, COPPER TUBING TO BE SECURED WITH CUSHION CLAMPS, ADJUSTABLE DUAL HIGH/LOW PRESSURE CONTROL, SUCTION SERVICE VALVE, SEALED LIQUID LINE FILTER AND SIGHT GLASS, SEALED NON–FUSED DISCONNECT WITH LOCKABLE HANDLE, SUCTION ACCUMULATOR, R404A, 10mm LIQUID LINE CONNECTION, 16mm SUCTION LINE CONNECTION, 13mm INLET AND DISCHARGE COOLING WATER CONNECTIONS, AND WATER REGULATING VALVE (FOR FIELD INSTALLATION). UNIT TO BE COMPLETE WITH EXTENDED 4 YEAR WARRANTY.

PERFORMANCE:
SUCTION TEMPERATURE – –2.6°C
CONDENSING TEMPERATURE – 40.5°C
ELECTRICAL – 0.56 kW, 6.8 MCA, 15 MOP, 208/1/60
ENTERING WATER – 29.4°C
FLOWRATE – 5.1 L/min
PRESSURE DROP – 8.3 kPa
SYSTEM CAPACITY – 2.39 kW

EVAP1–3

WALL MOUNTED, LOW PROFILE, EVAPORATOR c/w 9mm TUBING COIL, HEAVY GAUGE ALUMINUM CABINET, HINGED DRAIN PAN WITH 19MM DRAIN CONNECTION, FAN GUARDS, ECM MOTOR, 6 FPI, ELECTRONIC CONTROLLER (ELECTRIC DEFROST TIMER AND THERMOSTAT IN ONE COMPLETE WITH DEMAND DEFROST FUNCTIONALITY, EXPANSION VALVE, 12mm LIQUID LINE CONNECTION, 22mm SUCTION LINE CONNECTION, MOUNTING BRACKETS, AND FACTORY INSTALLED LIQUID LINE SOLENOID.

PERFORMANCE:
AIRFLOW – 953 L/s
EVAPORATOR TEMPERATURE – –2.28°C
BOX TEMPERATURE – 3°C
ELECTRICAL – 2 AMPS, 200 WATTS, 2.3 MCA, 15 MOP, 208/1/60

DAIRY COOLER

CND1–4

CO–AXIAL WATER–COOLED HEREMTIC CONDENSING UNIT, PRE–ENGINEERED PACKAGE, SKID MOUNTED c/w RECEIVER WITH FUSIBLE PLUG AND LIQUID SHUTOFF VALVE, COPPER TUBING TO BE SECURED WITH CUSHION CLAMPS, ADJUSTABLE DUAL HIGH/LOW PRESSURE CONTROL, SUCTION SERVICE VALVE, SEALED LIQUID LINE FILTER AND SIGHT GLASS, SEALED NON–FUSED DISCONNECT WITH LOCKABLE HANDLE, SUCTION ACCUMULATOR, R404A, 10mm LIQUID LINE CONNECTION, 16mm SUCTION LINE CONNECTION, 13mm INLET AND DISCHARGE COOLING WATER CONNECTIONS, AND WATER REGULATING VALVE (FOR FIELD INSTALLATION). UNIT TO BE COMPLETE WITH EXTENDED 4 YEAR WARRANTY.

PERFORMANCE:
SUCTION TEMPERATURE – –2.6°C
CONDENSING TEMPERATURE – 40.5°C
ELECTRICAL – 0.56 kW, 6.8 MCA, 15 MOP, 208/1/60
ENTERING WATER – 29.4°C
FLOWRATE – 5.1 L/min
PRESSURE DROP – 8.3 kPa
SYSTEM CAPACITY – 2.39 kW

EVAP1–4

WALL MOUNTED, LOW PROFILE, EVAPORATOR c/w 9mm TUBING COIL, HEAVY GAUGE ALUMINUM CABINET, HINGED DRAIN PAN WITH 19MM DRAIN CONNECTION, FAN GUARDS, ECM MOTOR, 6 FPI, ELECTRONIC CONTROLLER (ELECTRIC DEFROST TIMER AND THERMOSTAT IN ONE COMPLETE WITH DEMAND DEFROST FUNCTIONALITY, EXPANSION VALVE, 12mm LIQUID LINE CONNECTION, 22mm SUCTION LINE CONNECTION, MOUNTING BRACKETS, AND FACTORY INSTALLED LIQUID LINE SOLENOID.

PERFORMANCE:
AIRFLOW – 953 L/s
EVAPORATOR TEMPERATURE – –2.28°C
BOX TEMPERATURE – 3°C
ELECTRICAL – 2 AMPS, 200 WATTS, 2.3 MCA, 15 MOP, 208/1/60

SEAFOOD FREEZER

CND1–5

CO–AXIAL WATER–COOLED HEREMTIC CONDENSING UNIT, PRE–ENGINEERED PACKAGE, SKID MOUNTED c/w RECEIVER WITH FUSIBLE PLUG AND LIQUID SHUTOFF VALVE, COPPER TUBING TO BE SECURED WITH CUSHION CLAMPS, ADJUSTABLE DUAL HIGH/LOW PRESSURE CONTROL, SUCTION SERVICE VALVE, CRANKCASE HEATER, SEALED LIQUID LINE FILTER AND SIGHT GLASS, SEALED NON–FUSED DISCONNECT WITH LOCKABLE HANDLE, SUCTION ACCUMULATOR, R404A, 10mm LIQUID LINE CONNECTION, 22mm SUCTION LINE CONNECTION, 16mm INLET AND DISCHARGE COOLING WATER CONNECTIONS, AND WATER REGULATING VALVE (FOR FIELD INSTALLATION). UNIT TO BE COMPLETE WITH EXTENDED 4 YEAR WARRANTY.

PERFORMANCE:
SUCTION TEMPERATURE – –28°C
CONDENSING TEMPERATURE – 40.5°C
ELECTRICAL – 1.86 kW, 18.8 MCA, 30 MOP, 208/1/60
ENTERING WATER – 29.4°C
FLOWRATE – 6.4 L/min
PRESSURE DROP – 4.2 kPa
SYSTEM CAPACITY – 2.75 kW

EVAP1–5

WALL MOUNTED, LOW PROFILE, EVAPORATOR c/w 9mm TUBING COIL, HEAVY GAUGE ALUMINUM CABINET, HINGED DRAIN PAN WITH 19MM DRAIN CONNECTION, FAN GUARDS, ECM MOTOR, 6 FPI, ELECTRONIC CONTROLLER (ELECTRIC DEFROST TIMER AND THERMOSTAT IN ONE COMPLETE WITH DEMAND DEFROST FUNCTIONALITY, EXPANSION VALVE, 12mm LIQUID LINE CONNECTION, 22mm SUCTION LINE CONNECTION, MOUNTING BRACKETS, AND FACTORY INSTALLED LIQUID LINE SOLENOID.

PERFORMANCE:
AIRFLOW – 850 L/s
EVAPORATOR TEMPERATURE – –27.7°C
BOX TEMPERATURE – –23°C
ELECTRICAL – 1.2 AMPS, 120 WATTS, 1.4 MCA, 15 MOP, 208/1/60
DEFROST HEATERS – 8.2 AMPS, 1890 WATTS, 10.3 MCA, 15 MOP

Public Works and Government Services Canada / Travaux Publics et Services gouvernementaux Canada

APPROX. NORTH

M&R ENGINEERING
5531 Cornwallis St. Halifax, NS, B3K 1B3
Tel: (902) 420-0393 Fax: (902) 423-9945
www.mrengca

GENERAL NOTES :

DO NOT SCALE THIS DRAWING FOR CONSTRUCTION PURPOSES. USE FIGURED DIMENSIONS AS NOTED.

THESE DRAWINGS ARE TO BE READ IN CONJUNCTION WITH SPECIFICATIONS AND GENERAL CONTRACTUAL CONDITIONS.

ALL DIMENSIONS AND CONDITIONS ARE TO BE VERIFIED ON SITE. ALL DISCREPANCIES ARE TO BE REPORTED TO THE DEPARTMENTAL REPRESENTATIVE AND AGREED UPON WITH THEM IN WRITING BEFORE PROCEEDING WITH WORKS.

INFORMATION ON THESE DRAWINGS IS TO BE USED FOR THIS PROJECT ONLY AND SHALL NOT BE USED FOR ANY OTHER PURPOSE.

Addendum #:07
Reference Drawing: 01–MP–601

project / projet
CANADIAN COAST GUARD COLLEGE
SYDNEY, NS
MECHANICAL & SPRINKLER UPGRADES

drawing / dessin
PLUMBING
CABOT WEST LEVEL 100
FREEZER/COOLER
HEAT RECOVERY
SCHEDULES & DETAILS

designed / conçu: MJM
date: 08/10/18
drawn / dessiné: DJL
date: 08/10/18
approved / approuvé: RJK
date: 08/10/18
Tender / Soumission: Joan Muise 08/10/18
PWGSC Project Manager / Administrateur de projets TPSGC

project number / no. du projet: R.065476.700

drawing no. / no. du dessin: 01–MP–SK010

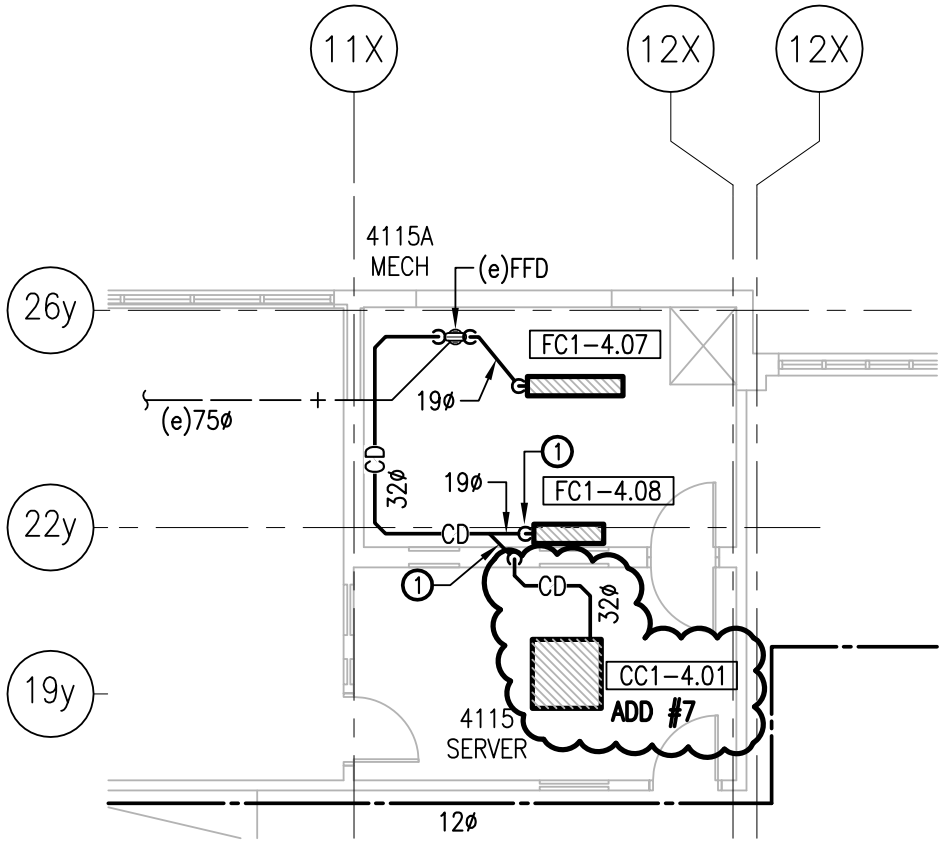

LEVEL 400

SCALE : 1:100

0m 1m 2m 3m 4m 5m 6m 7m 8m 9m 10m

Reference Drawing: 01-MC-101

Addendum #: 5

Public Works and Government Services Canada / Travaux publics et Services gouvernementaux Canada	project / projet: CANADIAN COAST GUARD COLLEGE, SYDNEY, NS MECHANICAL & SPRINKLER UPGRADES	Drawing title / Titre du dessin: 01 – CABOT CENTRAL SERVER ROOM 4115 SPLIT SYSTEM CONDENSATE DRAIN PIPING	designed / conçu: MJM — date: 08/03/18
Tender / Soumission: Joan Muise — 08/03/18			drawn / dessiné: MAC — date: 08/03/18
			approved / approuvé: RJK — date: 08/03/18
PWGSC Project Manager / Administrateur de projets TPSGC		project number / no. du projet: R.065476.700	drawing no. / no. du dessin: 01-MC-SK002

PWGSC L1 (2004)

E-DRM/GDD-E: 538447

01 – CABOT BUILDING – RETURN/EXHAUST FAN SCHEDULE

MARK	APPLICATION	LOCATION	TYPE AND SIZE OF UNIT FAN	ARRANGEMENT & DRIVE	FAN DATA						MOTOR DATA		STARTER DATA		FAN INTERLOCKING	VIBRATION ISOLATORS			SOUND POWER LEVEL (db) (OCTAVE BANDS)								COMMENTS
					AIR FLOW (L/s)	SP (Pa)	OV (m/Min)	DISCHARGE	BkW	RPM	MOTOR (kW)	ELECTRICAL (VOLT/PH)	TYPE	LOCATION		BASE	SPRINGS	STATIC DEF. (mm)	1	2	3	4	5	6	7	8	
RF1–1	AHU1–1 SYSTEM RETURN FAN	MECH MEZZ 3110C	INLINE MIXED FLOW	AS SHOWN V–BELT	2,838	250	441	HORIZONTAL	1.2	1227	1.49	575/3/60	VSD BY DIV 25	REFER TO DIV 26 DWGS	AHU1–1, EMCS	–	SHR	25	72	78	77	74	70	67	62	56	–
RF1–2	AHU1–2 SYSTEM RETURN FAN	MECH ROOM 3116	INLINE MIXED FLOW	AS SHOWN V–BELT	2,838	250	441	HORIZONTAL	1.2	1227	1.49	575/3/60	VSD BY DIV 25	REFER TO DIV 26 DWGS	AHU1–2, EMCS	–	SHR	25	72	78	77	74	70	67	62	56	–
RF1–3	AHU1–3 SYSTEM RETURN FAN	MECH ROOM 3152	INLINE MIXED FLOW	AS SHOWN V–BELT	2,128	250	397	HORIZONTAL	0.9	1278	1.12	575/3/60	MAGNETIC	REFER TO DIV 26 DWGS	AHU1–3, EMCS	–	SHR	25	68	77	75	72	67	65	61	55	–
EF1–1	2331 CHEMISTRY FUME HOOD	MECH ROOM 4133A	BI CENTRIFUGAL UTILITY FAN	AS SHOWN DIRECT DRIVE	190	186	160	VERTICAL	0.08	1555	0.19	120/1/60	MANUAL	REFER TO DIV 26 DWGS	EMCS, SWITCH AT HOOD	–	SLR ADD #7	25	79	75	69	64	61	56	52	44	c/w SPRING HANGING ISOLATION KIT, UNIT MOUNTED SPEED CONTROL
EF1–2	GARBAGE RECYCLING ROOMS	GARBAGE ROOM 1401	CENTRIFUGAL INLINE	AS SHOWN DIRECT DRIVE	355	125	170	HORIZONTAL	0.08	1313	0.19	120/1/60	MAGNETIC	REFER TO DIV 26 DWGS	EMCS	–	–	–	64	67	64	65	61	56	48	47	c/w SPRING HANGING ISOLATION KIT, UNIT MOUNTED SPEED CONTROL
EF1–3	DISHWASHER EXHAUST	MECH ROOM 2802C	CENTRIFUGAL INLINE	AS SHOWN DIRECT DRIVE	236.5	125	152	HORIZONTAL	0.07	1725	0.08	120/1/60	MANUAL	REFER TO DIV 26 DWGS	VAV–, EMCS	–	–	–	75	75	72	65	61	58	55	48	c/w SPRING HANGING ISOLATION KIT, UNIT MOUNTED SPEED CONTROL
EF1–4	KITCHEN HOOD EXHAUST	ROOF ABOVE RM 1708B DISHWASH	ROOF MOUNTED GREASE EXHAUST FAN	AS SHOWN V–BELT	2,128.5	500	914	VERTICAL	2.65	1550	3.73	575/3/60	VSD BY DIV 25	REFER TO DIV 26 DWGS	EMCS, AHU1–4	–	–	–	–	–	–	–	–	–	–	–	c/w BACKDRAFT DAMPER ON DISCHARGE, SLOPED ROOF CURB AND DISCONNECT SWITCH
EF1–5	KITCHEN HOOD EXHAUST	ROOF ABOVE RM 1708B DISHWASH	ROOF MOUNTED GREASE EXHAUST FAN	AS SHOWN V–BELT	3,547.5	500	862	VERTICAL	4.36	1198	5.59	575/3/60	VSD BY DIV 25	REFER TO DIV 26 DWGS	EMCS, AHU1–4	–	–	–	–	–	–	–	–	–	–	–	c/w BACKDRAFT DAMPER ON DISCHARGE, SLOPED ROOF CURB AND DISCONNECT SWITCH
EF1–6	ELEVATOR ROOM 1707A EXHAUST	RECEIVING BAY 1403	CENTRIFUGAL INLINE	AS SHOWN DIRECT DRIVE	355	125	170	HORIZONTAL	0.08	1313	0.19	120/1/60	MAGNETIC	REFER TO DIV 26 DWGS	EMCS	–	–	–	64	67	64	65	61	56	48	47	c/w SPRING HANGING ISOLATION KIT, UNIT MOUNTED SPEED CONTROL
EF1–7	ELECTRICAL ROOM 1707 EXHAUST	RECEIVING BAY 1403	CENTRIFUGAL INLINE	AS SHOWN DIRECT DRIVE	94.5	125	61	HORIZONTAL	0.04	1488	0.1	120/1/60	MAGNETIC	REFER TO DIV 26 DWGS	EMCS	–	–	–	68	73	69	60	57	54	49	42	c/w SPRING HANGING ISOLATION KIT, UNIT MOUNTED SPEED CONTROL
EF1–8	FREEZER AREA EXHAUST	RECEIVING BAY 1403	CENTRIFUGAL INLINE	AS SHOWN DIRECT DRIVE	165	125	106	HORIZONTAL	0.06	1707	0.1	120/1/60	MAGNETIC	REFER TO DIV 26 DWGS	EMCS	–	–	–	69	75	73	65	60	58	54	46	c/w SPRING HANGING ISOLATION KIT, UNIT MOUNTED SPEED CONTROL
EF1–9	RECEIVING AREA EXHAUST	RECEIVING BAY 1403	CENTRIFUGAL INLINE	AS SHOWN DIRECT DRIVE	496	125	239	HORIZONTAL	0.18	1559	0.19	120/1/60	MAGNETIC	REFER TO DIV 26 DWGS	EMCS	–	–	–	67	72	71	70	65	61	55	52	c/w SPRING HANGING ISOLATION KIT, UNIT MOUNTED SPEED CONTROL
EF1–10	CHANGE ROOMS EXHAUST	M CHANGE RM 1603B	CENTRIFUGAL INLINE	AS SHOWN DIRECT DRIVE	283	125	136	HORIZONTAL	0.06	1229	0.19	120/1/60	MAGNETIC	REFER TO DIV 26 DWGS	EMCS	–	–	–	64	67	62	63	60	55	46	45	c/w SPRING HANGING ISOLATION KIT, UNIT MOUNTED SPEED CONTROL
EF1–11	MWR & FWR 2020 EXHAUST	2020 CORRIDOR	CENTRIFUGAL INLINE	AS SHOWN DIRECT DRIVE	118	125	173	HORIZONTAL	0.095	1050	0.95	120/1/60	MANUAL	REFER TO DIV 26 DWGS	EMCS	–	–	–	–	–	–	–	–	–	–	–	c/w SPRING HANGING ISOLATION KIT, UNIT MOUNTED SPEED CONTROL
EF1–12	ATRIUM SMOKE EXHAUST	MECH ROOM 4115A	MEDIUM PRESSURE AXIAL	AS SHOWN V–BELT	3,547.5	125	727	HORIZONTAL	1.29	1452	1.49	575/3/60	MAGNETIC	REFER TO DIV 26 DWGS	EMCS, FIRE ALARM	–	SHR	25	90	97	90	88	85	81	76	73	ULC LISTED FOR SMOKE CONTROL
EF1–13	ATRIUM SMOKE EXHAUST	MECH ROOM 4133A	MEDIUM PRESSURE AXIAL	AS SHOWN V–BELT	3,547.5	125	727	HORIZONTAL	1.29	1452	1.49	575/3/60	MAGNETIC	REFER TO DIV 26 DWGS	EMCS, FIRE ALARM	–	SHR	25	90	97	90	88	85	81	76	73	ULC LISTED FOR SMOKE CONTROL ADD #7
EF1–14	ATRIUM SMOKE EXHAUST	MECH ROOM 4143A	MEDIUM PRESSURE AXIAL	AS SHOWN V–BELT	3,547.5	125	727	HORIZONTAL	1.29	1452	1.49	575/3/60	MAGNETIC	REFER TO DIV 26 DWGS	EMCS, FIRE ALARM	–	SHR	25	90	97	90	88	85	81	76	73	ULC LISTED FOR SMOKE CONTROL
EF1–15	WR 2802 EXHAUST	WR 2802	CENTRIFUGAL INLINE	AS SHOWN DIRECT DRIVE	47	125	30.5	HORIZONTAL	0.04	1275	0.18	120/1/60	MANUAL	REFER TO DIV 26 DWGS	SWITCH IN WR 2802	–	–	–	79	80	67	64	56	52	49	44	c/w SPRING HANGING ISOLATION KIT, UNIT MOUNTED SPEED CONTROL
EF1–16	BOARD RM 2029 EXHAUST	CIELING ABOVE ADJACENT OFFICE	CENTRIFUGAL INLINE	AS SHOWN DIRECT DRIVE	110	125	70.1	HORIZONTAL	0.04	1525	0.13	120/1/60	MANUAL	REFER TO DIV 26 DWGS	SPEED CONTROL IN BOARD RM 2025	–	–	–	69	74	70	61	58	55	50	42	c/w SPRING HANGING ISOLATION KIT & WALL MOUNTED SPEED CONTROL
EF1–17	CARPENTRY SHOP RM 1101D EXHAUST	STORAGE RM 1101B	CENTRIFUGAL INLINE	AS SHOWN DIRECT DRIVE	188	125	122	HORIZONTAL	0.04	1630	0.07	120/1/60	MAGNETIC	REFER TO DIV 26 DWGS	EMCS SWITCH IN RM 1101D	–	–	–	75	74	70	63	59	56	53	46	c/w SPRING HANGING ISOLATION KIT & UNIT MOUNTED SPEED CONTROL
EF1–18	ATRIUM SMOKE EXHAUST	STORAGE RM 4150	MEDIUM PRESSURE AXIAL	AS SHOWN DIRECT DRIVE	23,650	250	958	HORIZONTAL	15.38	863	18.7	575/3/60	VSD BY DIV 25	REFER TO DIV 26 DWGS	EMCS, FIRE ALARM	–	SLR	50	101	108	103	101	94	89	85	81	ULC LISTED FOR SMOKE CONTROL

Reference Drawing: 01–MV–602

Addendum #: 7

Public Works and Government Services Canada / Travaux publics et Services gouvernementaux Canada	project / projet: CANADIAN COAST GUARD COLLEGE, SYDNEY, NS MECHANICAL & SPRINKLER UPGRADES	Drawing title / Titre du dessin: 01 – CABOT RETURN/EXHHAUST FAN SCHEDULE	designed / conçu: RJK — date: 08/10/18
Tender / Soumission: Joan Muise — 18/10/18			drawn / dessiné: RAFH — date: 08/10/18
PWGSC Project Manager / Administrateur de projets TPSGC			approved / approuvé: RJK — date: 08/10/18
		project number / no. du projet: R.065476.700	drawing no. / no. du dessin: 01–MV–SK006

PWGSC L2 (2004)

E–DRM/GDD–E: 538447

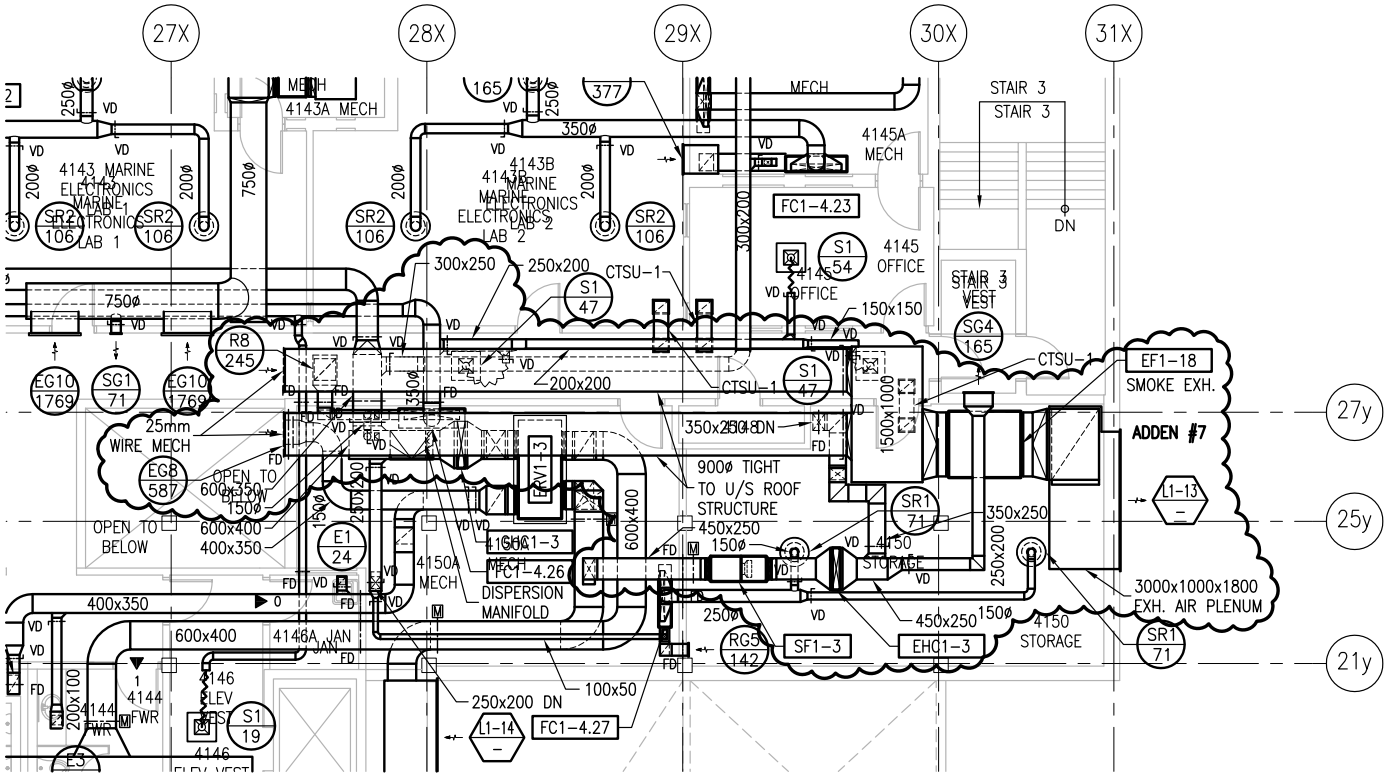

Reference Drawing: 01–MV–110

Addendum #: 7

Public Works and Government Services Canada / Travaux publics et Services gouvernementaux Canada	project / projet: CANADIAN COAST GUARD COLLEGE, SYDNEY, NS MECHANICAL & SPRINKLER UPGRADES	Drawing title / Titre du dessin: EF1–18 SMOKE EXHAUST SYSTEM ADDITION STORAGE RM 4150	designed / conçu: RJK — date: 08/10/18
Tender / Soumission: Joan Muise			drawn / dessiné: RAFH — date: 08/10/18
PWGSC Project Manager / Administrateur de projets TPSGC			approved / approuvé: RJK — date: 08/10/18
		project number / no. du projet: R.065476.700	drawing no. / no. du dessin: 01–MV–SK007

PWGSC L2 (2004)

E–DRM/GDD–E: 538447

01 – CABOT BUILDING – CROSS TALK SILENCER SCHEDULE ADD #7

MARK	DIMENSION (MM)					AIRFLOW (L/S)	VELOCITY (M/MIN)	INSERTION LOSS(dB)			CONFIGURATION	COMMENTS
	A	B	C	D	E			125Hz	250Hz	500Hz		
CTSL–1	950	300	250	175	75	0–60	65.2	5	11	22	L–SHAPED	NOTE 1
CTSL–2	950	600	250	175	75	61–120	65.2	5	11	22	L–SHAPED	NOTE 1
CTSL–3	950	900	250	175	75	121–190	69.8	5	11	22	L–SHAPED	NOTE 1
CTSL–4	950	1200	250	175	75	191–235	65.2	5	11	22	L–SHAPED	NOTE 1
CTSU–1	1200	300	250	175	75	0–60	65.2	5	11	22	U–SHAPED	NOTE 1
CTSL–2	1200	600	250	175	75	61–120	65.2	5	11	22	U–SHAPED	NOTE 1
CTSU–3	1200	900	250	175	75	121–190	69.8	5	11	22	U–SHAPED	NOTE 1
CTSU–4	1200	1200	250	175	75	191–235	65.2	5	11	22	U–SHAPED	NOTE 1
CTSZ–1	1200	300	250	175	75	0–60	65.2	5	11	22	Z–SHAPED	NOTE 1
CTSZ–2	1200	600	250	175	75	61–120	65.2	5	11	22	Z–SHAPED	NOTE 1
CTSZ–3	1200	900	250	175	75	121–190	69.8	5	11	22	Z–SHAPED	NOTE 1
CTSZ–4	1200	1200	250	175	75	191–235	65.2	5	11	22	Z–SHAPED	NOTE 1

NOTE 1 PROVIDE INSTALLATION COMPLETE WITH GRILLES AND DUCTWORK AS PER DETAILS BELOW.

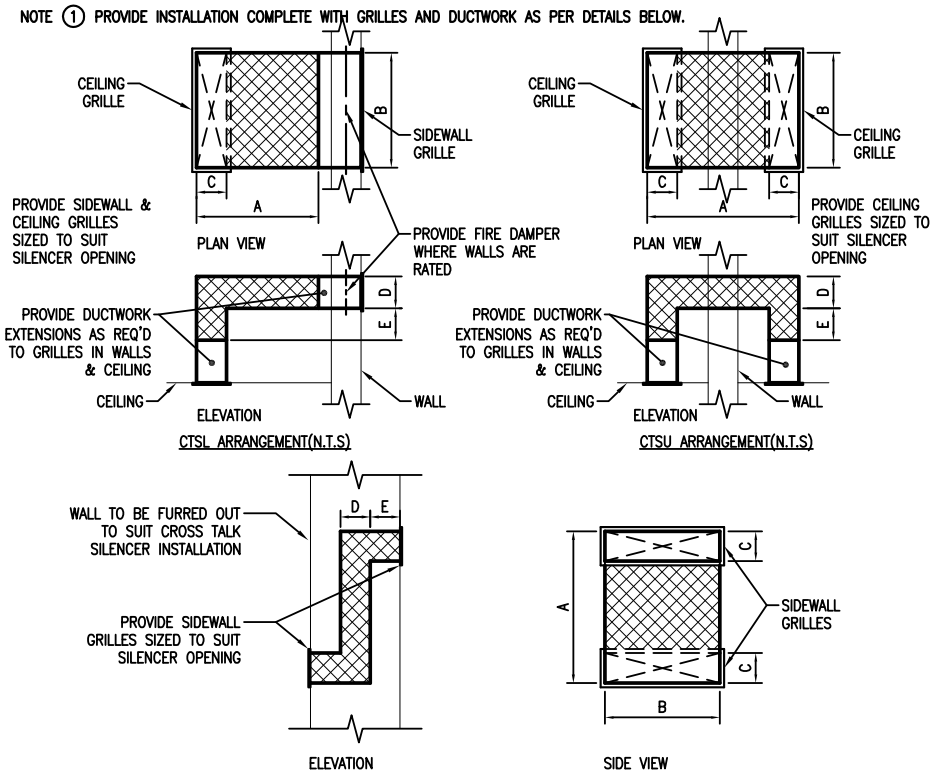

Reference Drawing: 01–MV–605

Addendum #: 7

Public Works and Government Services Canada / Travaux publics et Services gouvernementaux Canada

project / projet

CANADIAN COAST GUARD COLLEGE, SYDNEY, NS MECHANICAL & SPRINKLER UPGRADES

Drawing title / Titre du dessin

01 – CABOT BUILDING CROSS TALK SILENCER SCHEDULE AND DETAILS

designed / conçu	date
RJK	08/10/18
drawn / dessiné	date
RAFH	08/10/18
approved / approuvé	date
RJK	08/10/18

Tender / Soumission

Joan Muise
PWGSC Project Manager / Administrateur de projets TPSGC

project number / no. du projet: R.065476.700

drawing no. / no. du dessin: 01–MV–SK008

PWGSC L1P (2004)

E–DRM/GDD–E: 538447

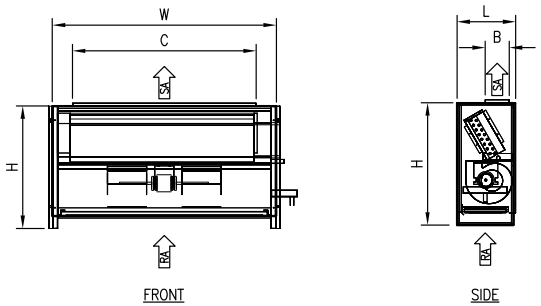

VERTICAL SIZES UP TO 10.6 kW

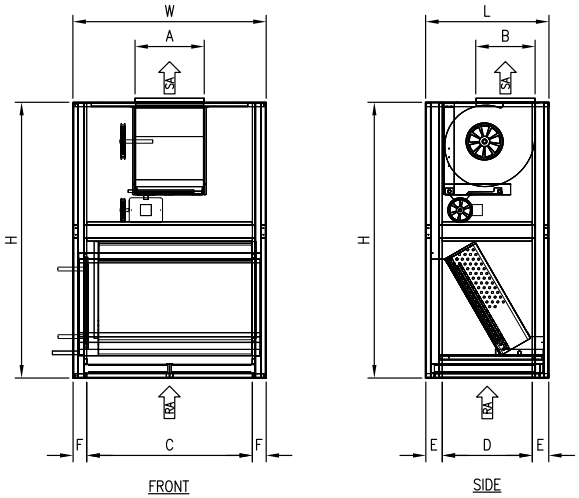

VERTICAL SIZES UP TO 14.0 & 17.6kW

DUCTED FAN COILS – VERTICAL

NOMINAL COOLING CAP. (kW)	NOMINAL AIRFLOW (L/s)	NO. OF FANS	DIMENSIONS									FILTERS	WEIGHT (kg)	MOTOR (WATTS)	AMPS	COIL SIZE
			L	W	H	A	B	C	D	E	F					
1.8	142	1	267	787	610	–	102	584	–	–	–	203x686	20.9	124	3.7	–
2.6	189	2	267	965	610	–	102	762	–	–	–	203x864	27.3	124	3.7	–
3.5	189	2	267	965	610	–	102	762	–	–	–	203x864	27.3	124	3.7	–
5.3	283	2	267	1295	610	–	102	1067	–	–	–	203x1194	32.7	124	3.7	–
8.4	378	2	330	1295	711	–	140	1067	–	–	–	241x1194	38.2	186	3.8	–
9.5	566	2	368	1295	813	–	171	1067	–	–	–	318x1200	45.5	373	9.4	–
10.6	850	2	406	1397	910	–	203	1168	–	–	–	2 @ 343x648	54.5	(2)249	11.8	–
14.0	1416	1	711	1118	1600	396	343	965	584	64	76	2 @ 635x508	141	2240	–	635x889
17.6	1888	1	711	1397	1715	472	404	1168	584	64	114	3 @ 635x406	186	2240	–	635x1168

VERTICAL DUCTED FAN COIL DETAILS (10 / MV502)

SCALE : N.T.S.

ADD #7

Reference Drawing: 01–MV–502

Addendum #: 7

Public Works and Government Services Canada / Travaux publics et Services gouvernementaux Canada	project / projet: CANADIAN COAST GUARD COLLEGE, SYDNEY, NS MECHANICAL & SPRINKLER UPGRADES	Drawing title / Titre du dessin: VERTICAL DUCTED FAN COIL DETAILS	designed / conçu: RJK — date: 08/10/18
Tender / Soumission: Joan Muise			drawn / dessiné: MAC — date: 08/10/18
PWGSC Project Manager / Administrateur de projets TPSGC			approved / approuvé: RJK — date: 08/10/18
		project number / no. du projet: R.065476.700	drawing no. / no. du dessin: 01–MV–SK009

PWGSC L2 (2004)

E-DRM/GDD-E: 538447

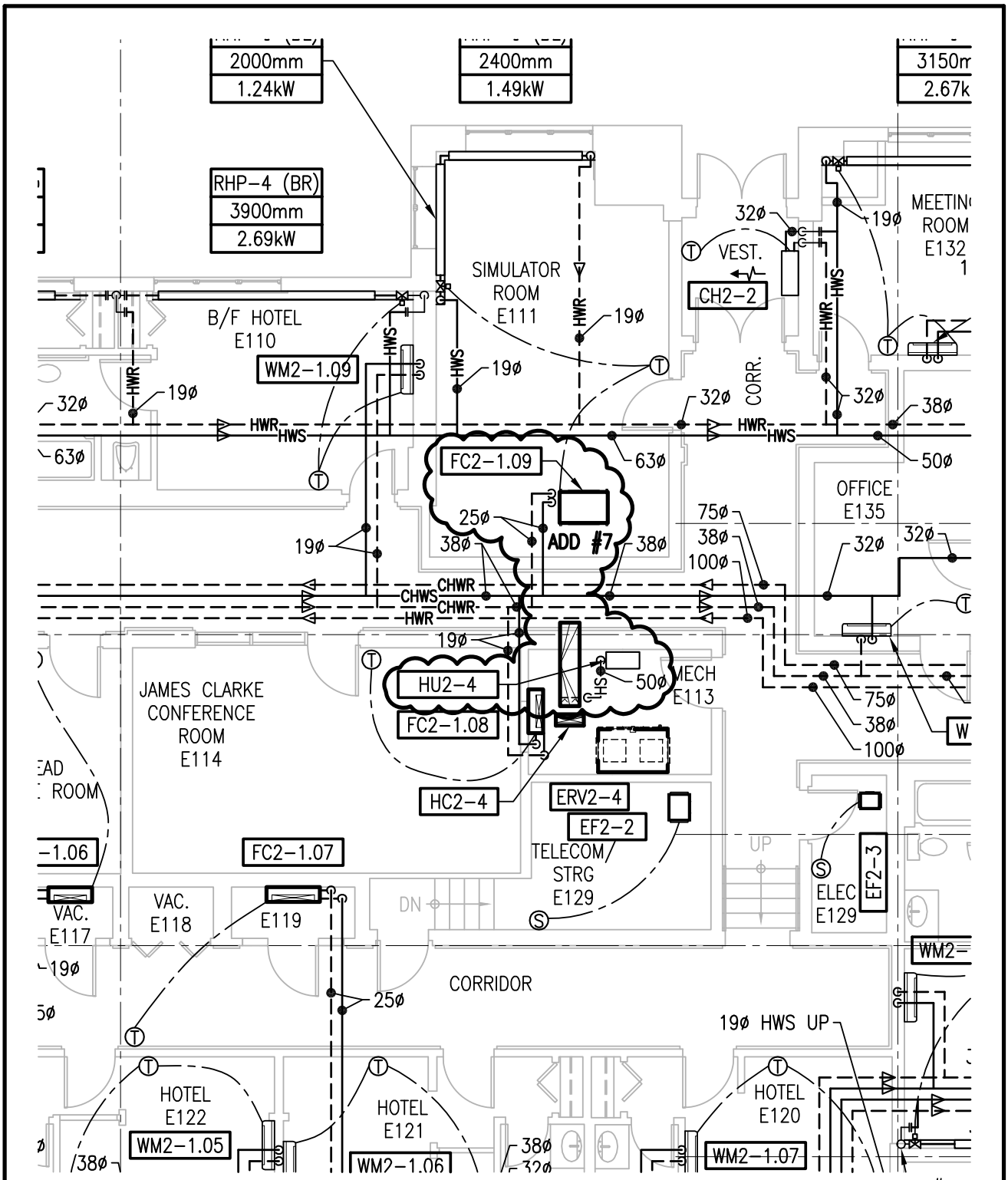

Reference Drawing: 02-MH-101

Addendum #: 7

Public Works and Government Services Canada / Travaux publics et Services gouvernementaux Canada	Drawing title / Titre du dessin: HUMIDIFIER HU2-4 MECH RM E113	designed / conçu: RJK	date: 08/10/18
project / projet: CANADIAN COAST GUARD COLLEGE, SYDNEY, NS MECHANICAL & SPRINKLER UPGRADES		drawn / dessiné: RAFH	date: 08/10/18
		approved / approuvé: RJK	date: 08/10/18
	Tender / Soumission: Joan Muise, PWGSC Project Manager / Administrateur de projets TPSGC		
	project number / no. du projet: R.065476.700	drawing no. / no. du dessin: 02-MH-SK001	

PWGSC L1P (2004)

E-DRM/GDD-E: 538447

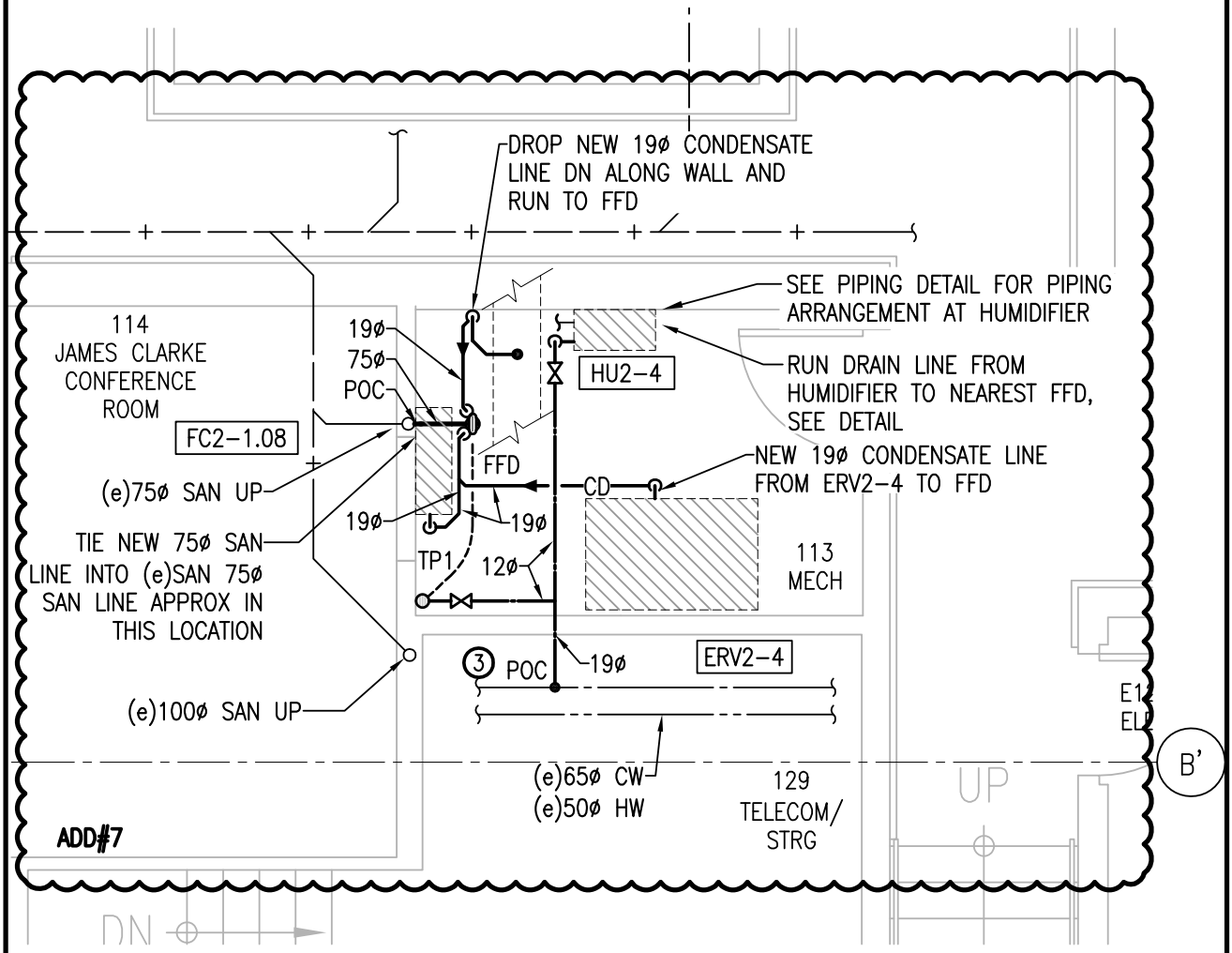

Reference Drawing: 02-MP-101

Addendum #: 7

Public Works and Government Services Canada / Travaux publics et Services gouvernementaux Canada	Drawing title / Titre du dessin: ADDITION OF HUMIDIFIER HU2-4 IN MECH RM E113	designed / conçu: MJM	date: 08/10/18
		drawn / dessiné: CAB	date: 08/10/18
project / projet: CANADIAN COAST GUARD COLLEGE, SYDNEY, NS MECHANICAL & SPRINKLER UPGRADES		approved / approuvé: DAM	date: 08/10/18
	Tender / Soumission: Joan Muise, PWGSC Project Manager	08/10/18, Administrateur de projets TPSGC	
	project number / no. du projet: R.065476.700	drawing no. / no. du dessin: 02-MP-SK001	

PWGSC L1P (2004)

E-DRM/GDD-E: 538447

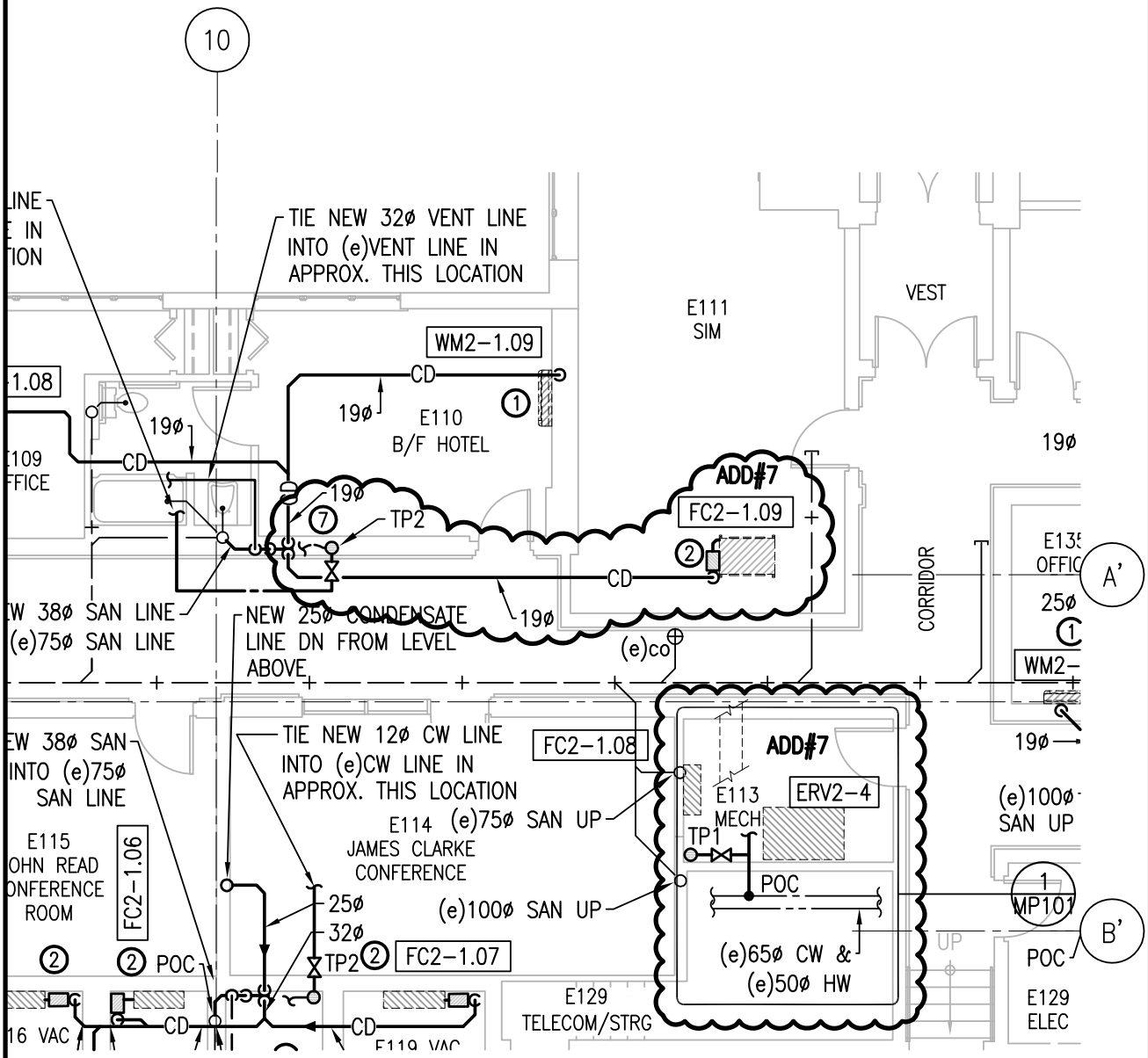

Reference Drawing: 02–MP–101

Addendum #: 7

Public Works and Government Services Canada / Travaux publics et Services gouvernementaux Canada	Drawing title / Titre du dessin: RELOCATED FC2–1.09 CONDENSATE LINE ADDITION	designed / conçu: MJM	date: 08/10/18
project / projet: CANADIAN COAST GUARD COLLEGE, SYDNEY, NS MECHANICAL & SPRINKLER UPGRADES		drawn / dessiné: CAB	date: 08/10/18
		approved / approuvé: DAM	date: 08/10/18
	Tender / Soumission: Joan Muise, PWGSC Project Manager	08/10/18, Administrateur de projets TPSGC	
	project number / no. du projet: R.065476.700	drawing no. / no. du dessin: 02–MP–SK002	

PWGSC L1P (2004)

E–DRM/GDD–E: 538447

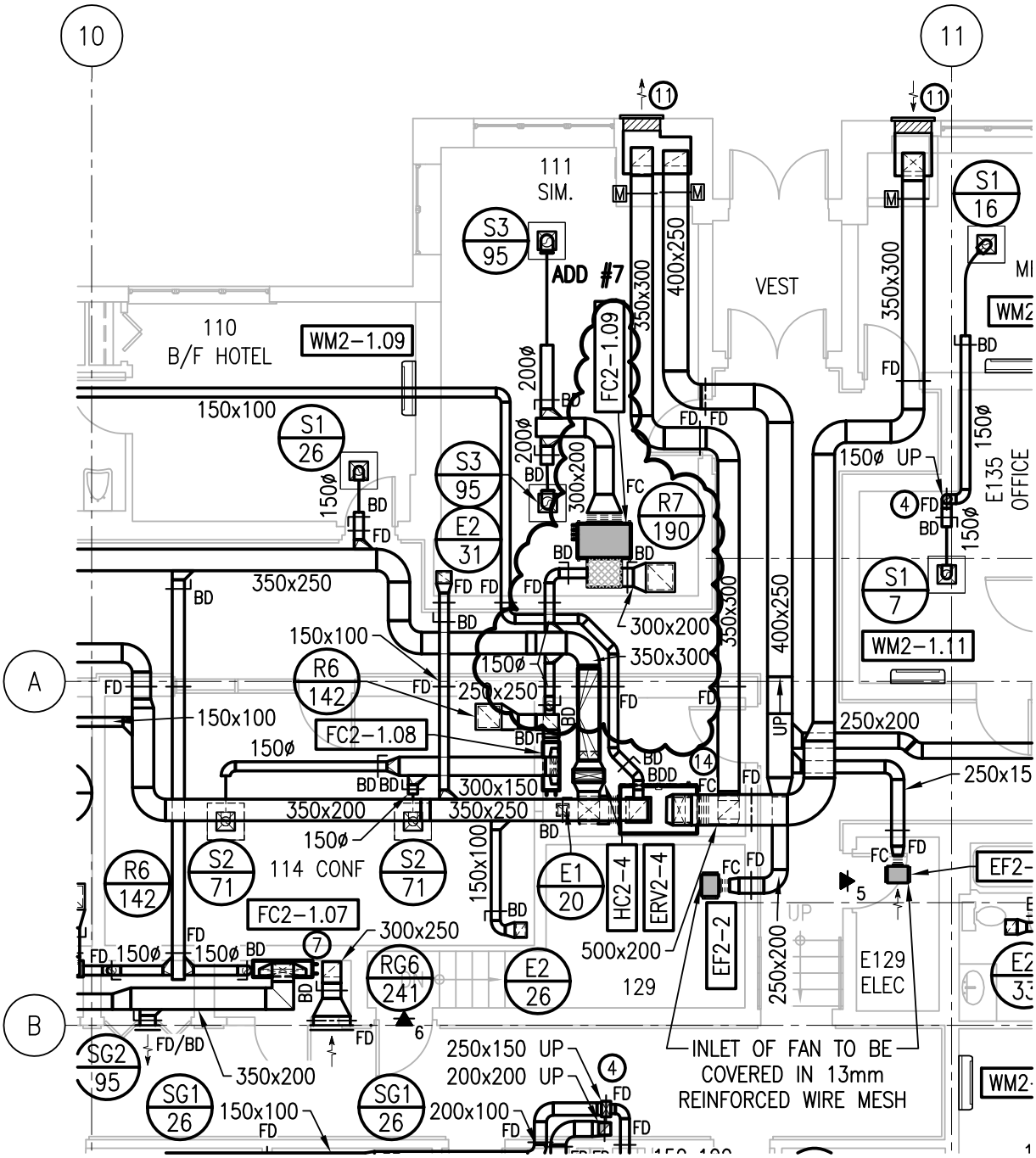

Reference Drawing: 02-MV-101

Addendum #: 7

Public Works and Government Services Canada / Travaux publics et Services gouvernementaux Canada	Drawing title / Titre du dessin: 02 – ARCTIC FAN COIL FC2-1.09 REVISIONS	designed / conçu: RJK	date: 08/10/18
		drawn / dessiné: RAFH	date: 08/10/18
		approved / approuvé: RJK	date: 08/10/18
project / projet: CANADIAN COAST GUARD COLLEGE, SYDNEY, NS MECHANICAL & SPRINKLER UPGRADES	Tender / Soumission: Joan Muise, PWGSC Project Manager / Administrateur de projets TPSGC		
	project number / no. du projet: R.065476.700	drawing no. / no. du dessin: 02-MV-SK001	

PWGSC L1P (2004)

E-DRM/GDD-E: 538447

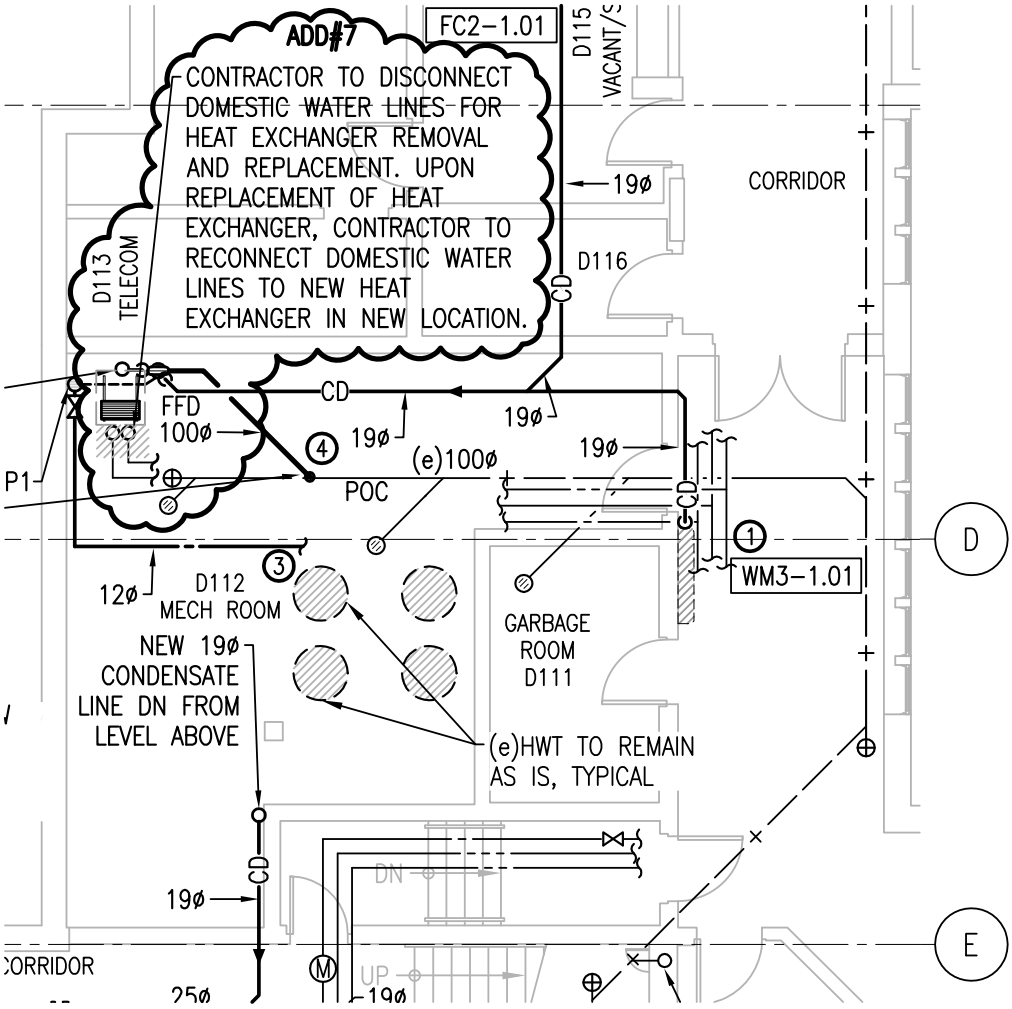

Reference Drawing: 03-MP-103

Addendum #: 7

Public Works and Government Services Canada / Travaux publics et Services gouvernementaux Canada	Drawing title / Titre du dessin: 03-PACIFIC/GREAT LAKES HEAT EXCHANGE REVISION	designed / conçu: MJM	date: 18/08/10
project / projet: CANADIAN COAST GUARD COLLEGE, SYDNEY, NS MECHANICAL & SPRINKLER UPGRADES		drawn / dessiné: CML	date: 18/08/10
		approved / approuvé: RJK	date: 18/08/10
	Tender / Soumission: Joan Muise, PWGSC Project Manager / Administrateur de projets TPSGC		
	project number / no. du projet: R.065476.700	drawing no. / no. du dessin: 03-MP-SK001	

PWGSC L1P (2004)

E-DRM/GDD-E: 538447

ADD #7

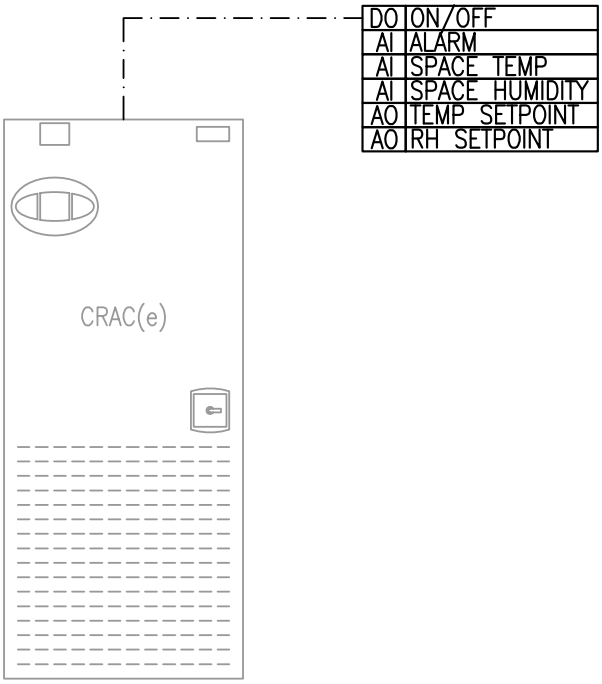

EXISTING LIEBERT CRAC UNIT CONTROLS
TYPICAL OF CRAC-1e, CRAC-2e, & CRAC-3e

12
MC101

N.T.S.

Reference Drawing: 05-MC-101

Addendum #: 7

Public Works and Government Services Canada / Travaux publics et Services gouvernementaux Canada	Drawing title / Titre du dessin: EXISTING LIEBERT CRAC UNITS CONTROLS	designed / conçu: RJK	date: 08/10/18
		drawn / dessiné: RAFH	date: 08/10/18
		approved / approuvé: RJK	date: 08/10/18
project / projet: CANADIAN COAST GUARD COLLEGE, SYDNEY, NS MECHANICAL & SPRINKLER UPGRADES	Tender / Soumission: Joan Muise, PWGSC Project Manager / Administrateur de projets TPSGC		
	project number / no. du projet: R.065476.700	drawing no. / no. du dessin: 05-MC-SK001	

PWGSC L1P (2004)

E-DRM/GDD-E: 538447

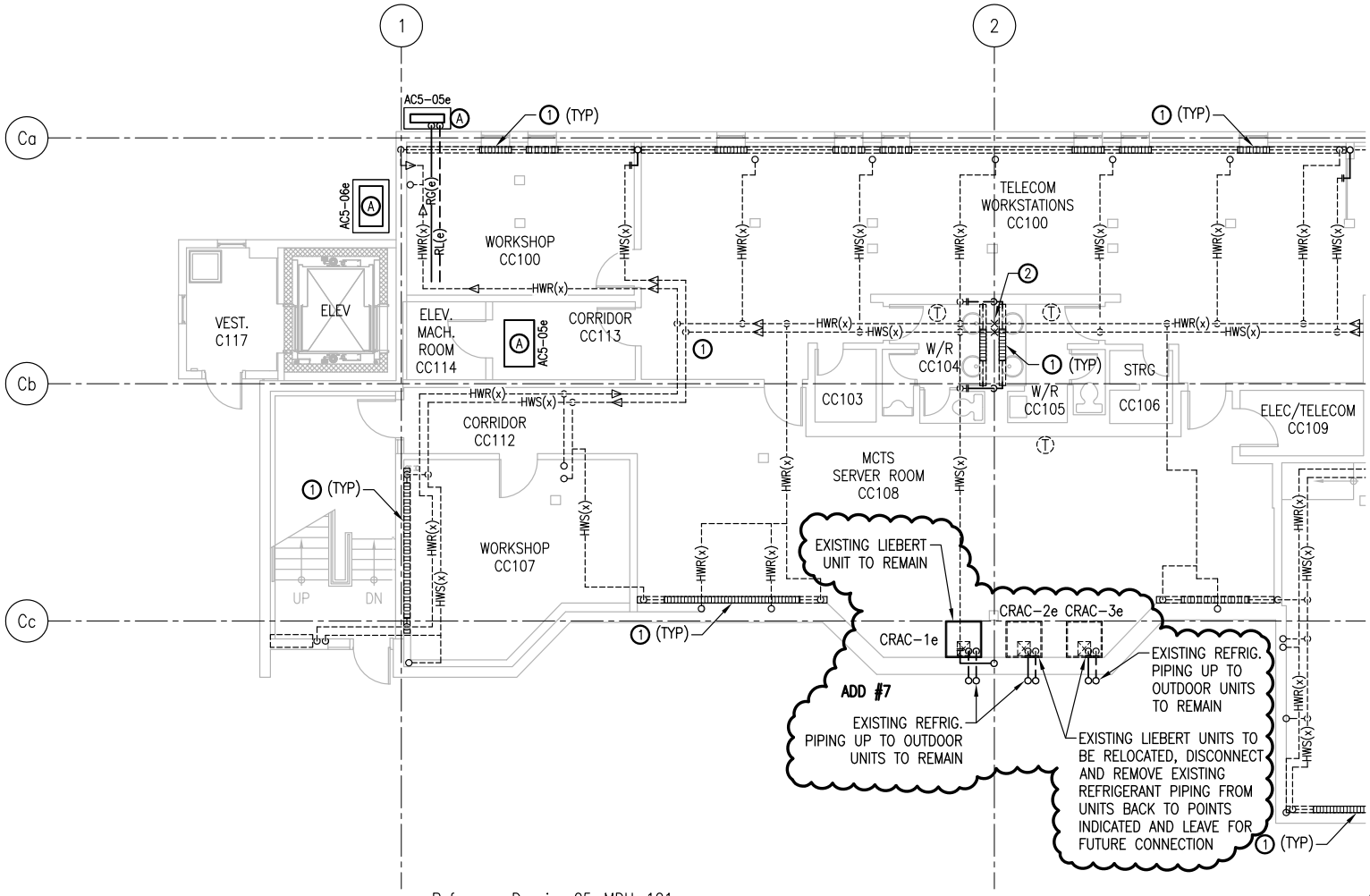

Reference Drawing: 05-MDH-101

Addendum #: 7

Public Works and Government Services Canada / Travaux publics et Services gouvernementaux Canada	project / projet: CANADIAN COAST GUARD COLLEGE, SYDNEY, NS MECHANICAL & SPRINKLER UPGRADES	Drawing title / Titre du dessin: HVAC PIPING – DEMOLITION MCTS SERVER ROOM CC108 LIEBERT UNIT REVISIONS	designed / conçu: ACJC — date: 08/10/18
Tender / Soumission: Joan Muise			drawn / dessiné: MAC — date: 08/10/18
PWGSC Project Manager / Administrateur de projets TPSGC			approved / approuvé: RJK — date: 08/10/18
		project number / no. du projet: R.065476.700	drawing no. / no. du dessin: 05-MDH-SK001

PWGSC L2 (2004)

E-DRM/GDD-E: 538447

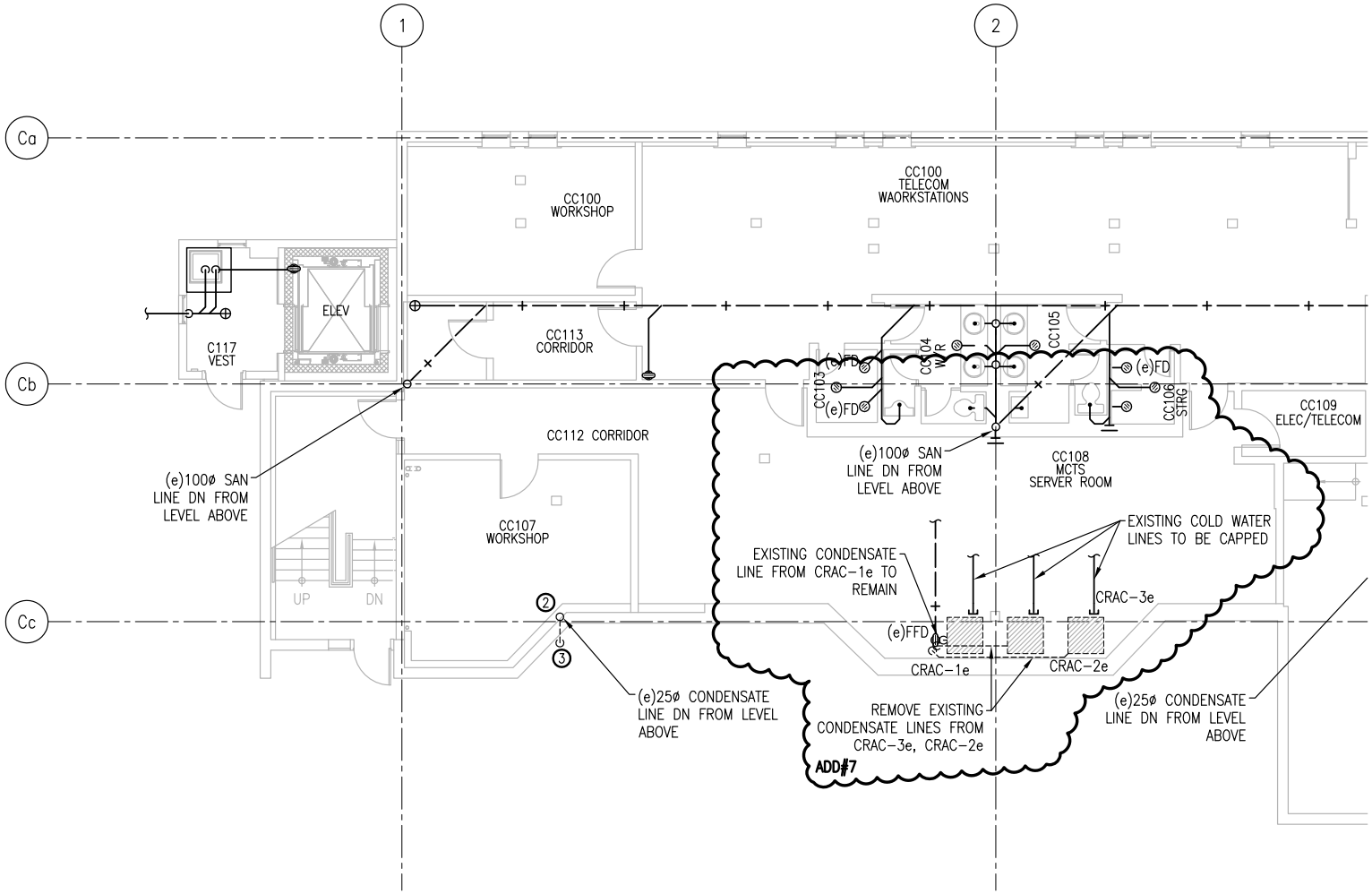

Reference Drawing: 05-MDP-101

Addendum #: 7

Public Works and Government Services Canada / Travaux publics et Services gouvernementaux Canada	project / projet	Drawing title / Titre du dessin	designed / conçu	date
	CANADIAN COAST GUARD COLLEGE, SYDNEY, NS MECHANICAL & SPRINKLER UPGRADES	PLUMBING – DEMOLITION MCTS SERVER ROOM CC108 LIEBERT UNIT REVISIONS	ACJC	08/10/18
Tender / Soumission			drawn / dessiné	date
Joan Muise			MAC	08/10/18
PWGSC Project Manager / Administrateur de projets TPSGC			approved / approuvé	date
			RJK	08/10/18
		project number / no. du projet	drawing no. / no. du dessin	
		R.065476.700	05-MDP-SK001	

PWGSC L2 (2004)

E-DRM/GDD-E: 538447

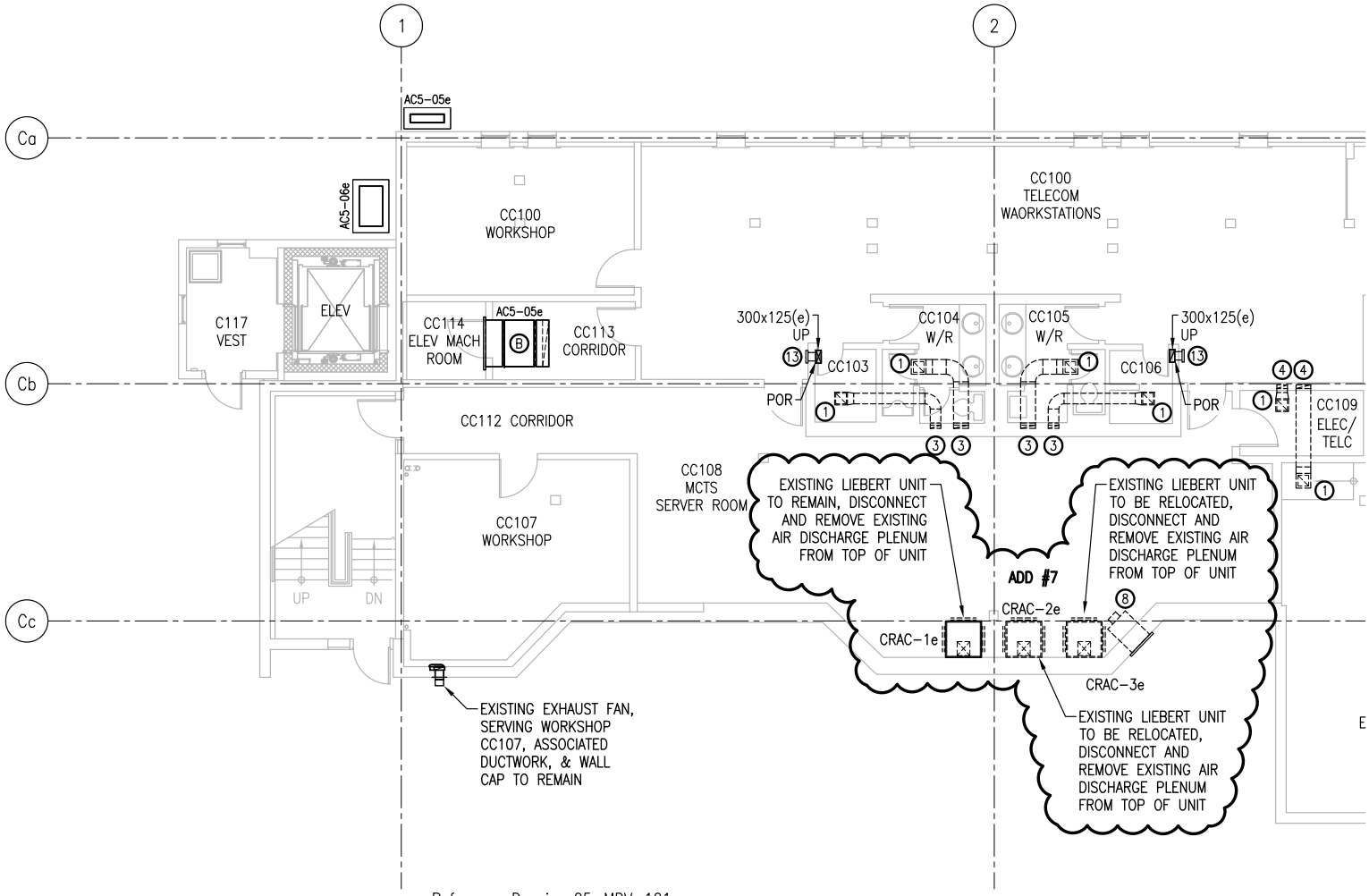

Reference Drawing: 05-MDV-101

Addendum #: 7

Public Works and Government Services Canada / Travaux publics et Services gouvernementaux Canada	project / projet: CANADIAN COAST GUARD COLLEGE, SYDNEY, NS MECHANICAL & SPRINKLER UPGRADES	Drawing title / Titre du dessin: VENTILATION – DEMOLITION MCTS SERVER ROOM CC108 LIEBERT UNIT REVISIONS	designed / conçu: ACJC — date: 08/10/18
Tender / Soumission: Joan Muise			drawn / dessiné: MAC — date: 08/10/18
PWGSC Project Manager / Administrateur de projets TPSGC			approved / approuvé: RJK — date: 08/10/18
		project number / no. du projet: R.065476.700	drawing no. / no. du dessin: 05-MDV-SK001

PWGSC L2 (2004)

E-DRM/GDD-E: 538447

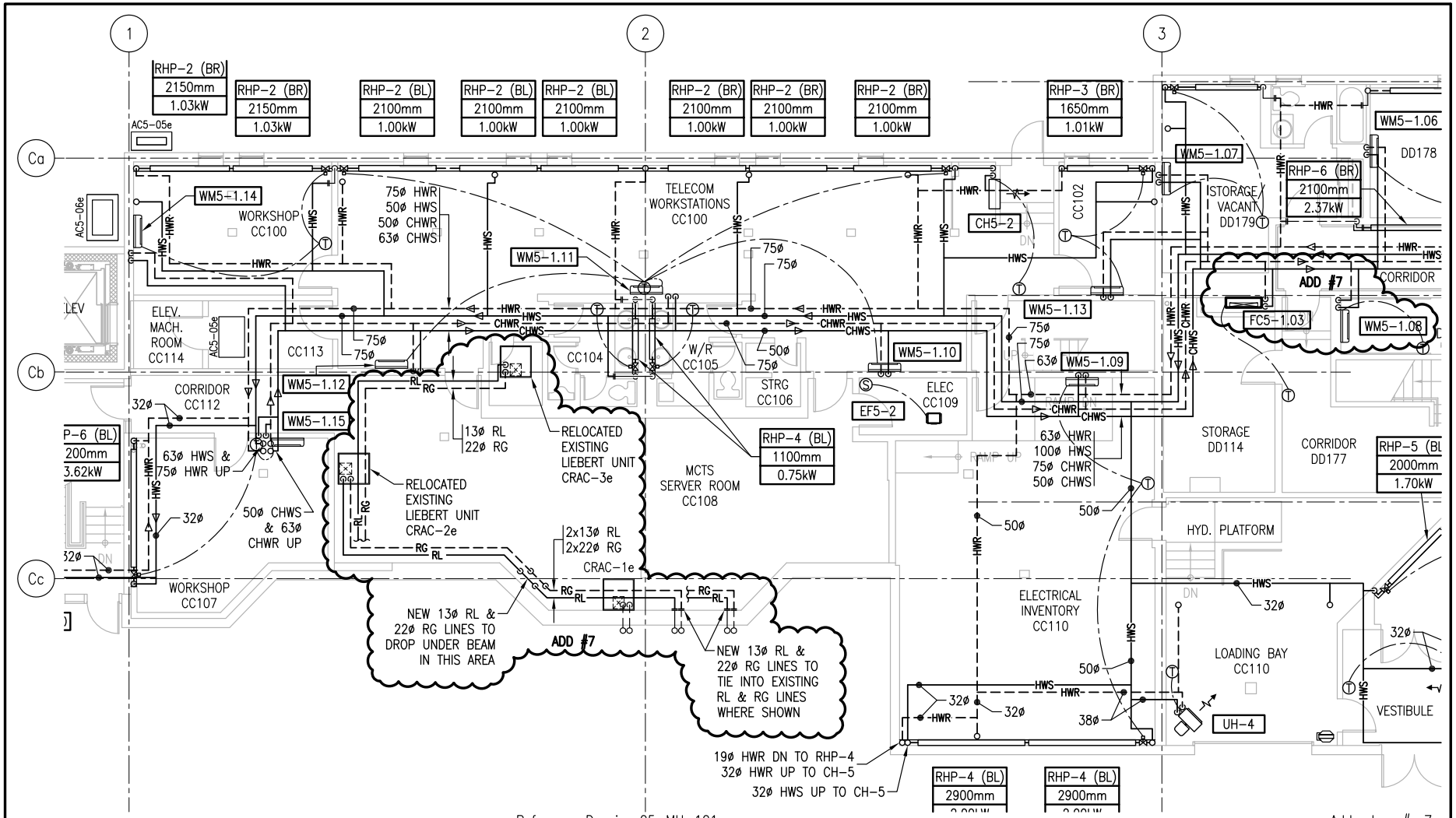

Public Works and Government Services Canada / Travaux publics et Services gouvernementaux Canada	project / projet: CANADIAN COAST GUARD COLLEGE, SYDNEY, NS MECHANICAL & SPRINKLER UPGRADES	Drawing title / Titre du dessin: HVAC PIPING – NEW WORK MCTS SERVER ROOM CC108 LIEBERT UNIT REVISIONS	designed / conçu: ACJC — date: 08/10/18
Tender / Soumission: Joan Muise			drawn / dessiné: MAC — date: 08/10/18
PWGSC Project Manager / Administrateur de projets TPSGC			approved / approuvé: RJK — date: 08/10/18
		project number / no. du projet: R.065476.700	drawing no. / no. du dessin: 05-MH-SK001

PWGSC L2 (2004)

E-DRM/GDD-E: 538447

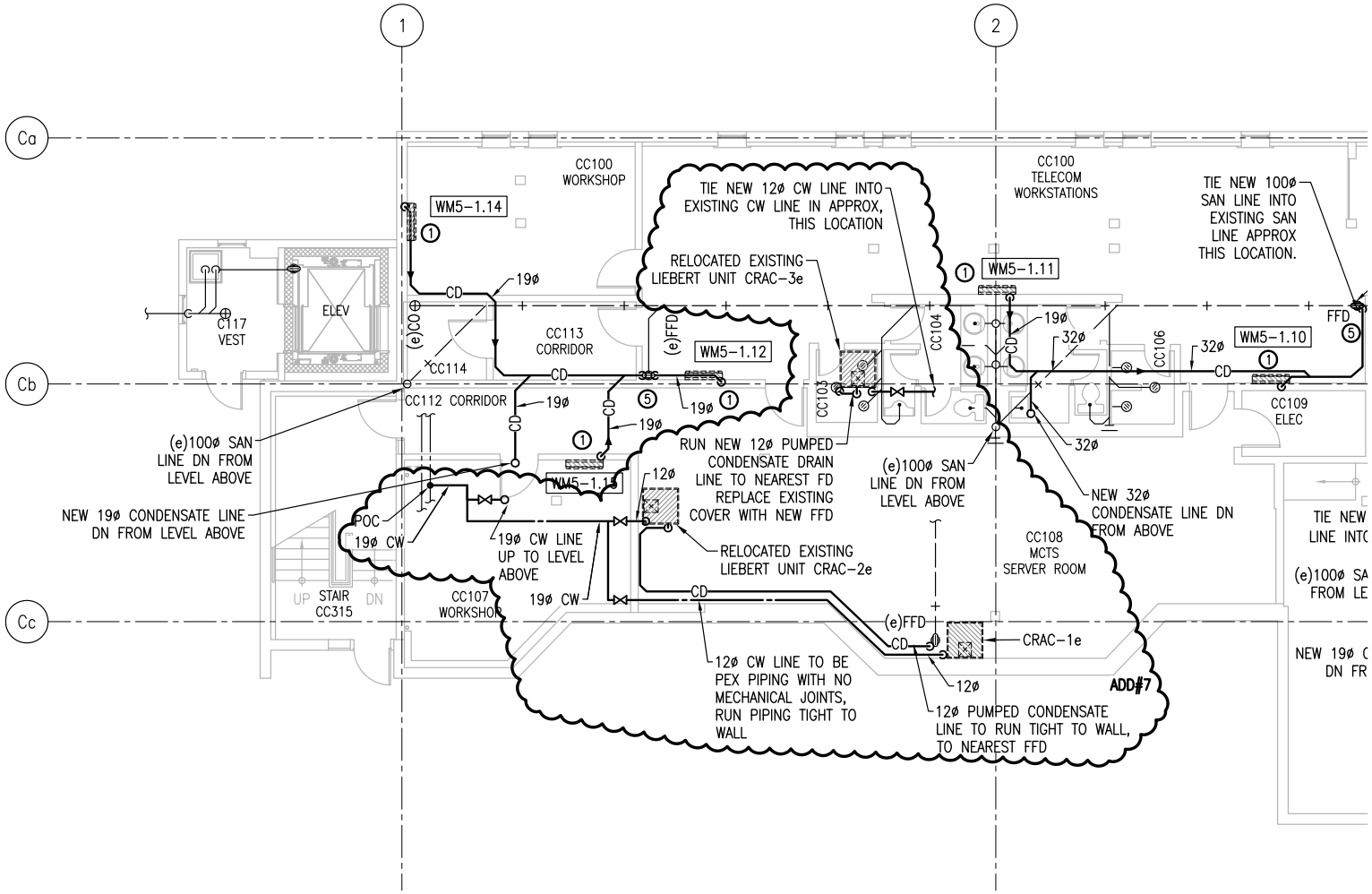

Reference Drawing: 05-MP-101

Addendum #: 7

Public Works and Government Services Canada / Travaux publics et Services gouvernementaux Canada	project / projet: CANADIAN COAST GUARD COLLEGE, SYDNEY, NS MECHANICAL & SPRINKLER UPGRADES	Drawing title / Titre du dessin: PLUMBING – NEW WORK MCTS SERVER ROOM CC108 LIEBERT UNIT REVISIONS	designed / conçu: ACJC — date: 08/10/18
Tender / Soumission: Joan Muise — 08/10/18			drawn / dessiné: MAC — date: 08/10/18
PWGSC Project Manager / Administrateur de projets TPSGC			approved / approuvé: RJK — date: 08/10/18
		project number / no. du projet: R.065476.700	drawing no. / no. du dessin: 05-MP-SK002

PWGSC L2 (2004)

E-DRM/GDD-E: 538447

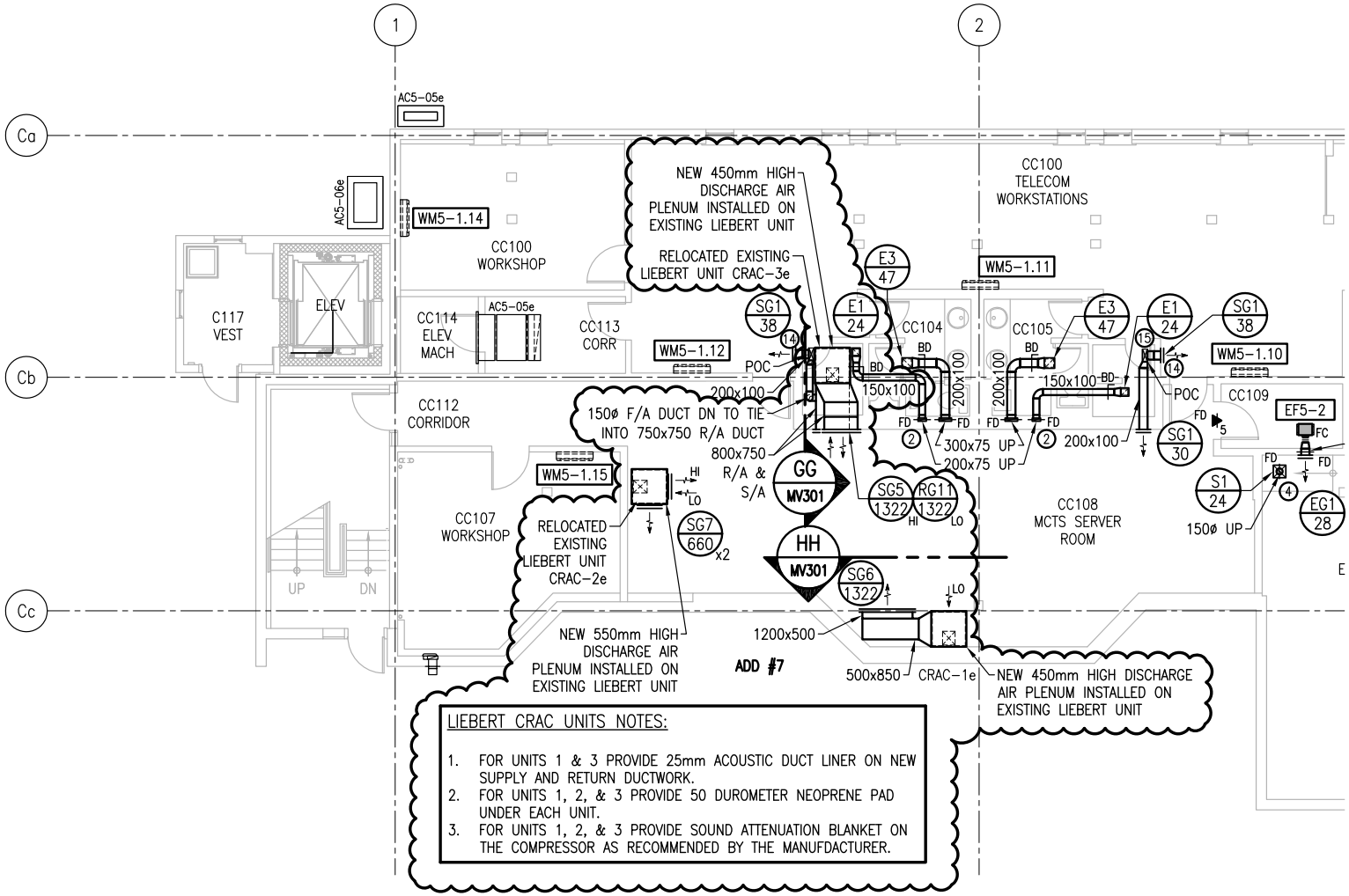

LIEBERT CRAC UNITS NOTES:

1. FOR UNITS 1 & 3 PROVIDE 25mm ACOUSTIC DUCT LINER ON NEW SUPPLY AND RETURN DUCTWORK.
2. FOR UNITS 1, 2, & 3 PROVIDE 50 DUROMETER NEOPRENE PAD UNDER EACH UNIT.
3. FOR UNITS 1, 2, & 3 PROVIDE SOUND ATTENUATION BLANKET ON THE COMPRESSOR AS RECOMMENDED BY THE MANUFDACTURER.

Reference Drawing: 05-MV-101

Addendum #: 7

Public Works and Government Services Canada / Travaux publics et Services gouvernementaux Canada	project / projet: CANADIAN COAST GUARD COLLEGE, SYDNEY, NS MECHANICAL & SPRINKLER UPGRADES	Drawing title / Titre du dessin: VENTILATION – NEW WORK MCTS SERVER ROOM CC108 LIEBERT UNIT REVISIONS	designed / conçu: ACJC — date: 08/10/18
Tender / Soumission: Joan Muise			drawn / dessiné: MAC — date: 08/10/18
PWGSC Project Manager / Administrateur de projets TPSGC			approved / approuvé: RJK — date: 08/10/18
		project number / no. du projet: R.065476.700	drawing no. / no. du dessin: 05-MV-SK001

PWGSC L2 (2004)

E-DRM/GDD-E: 538447

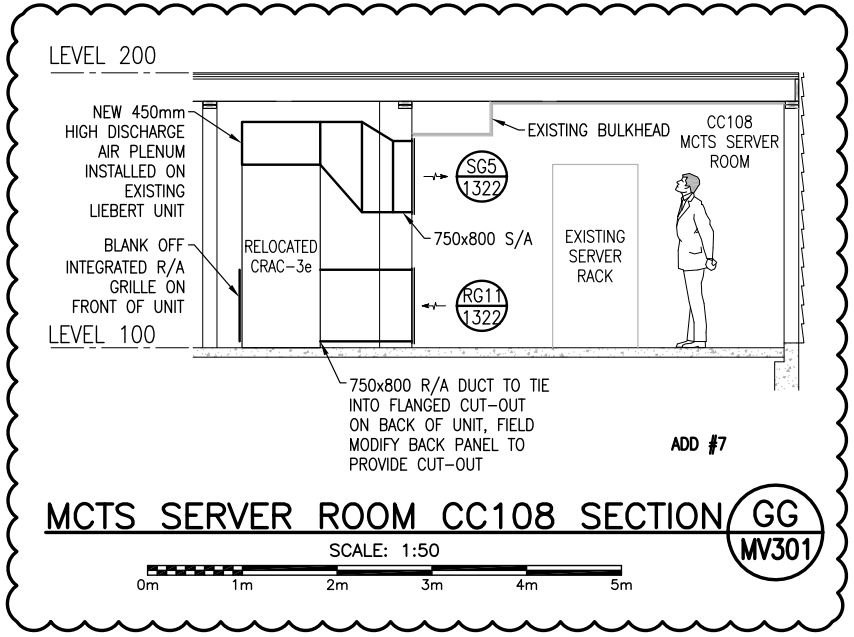

MCTS SERVER ROOM CC108 SECTION GG MV301

SCALE: 1:50

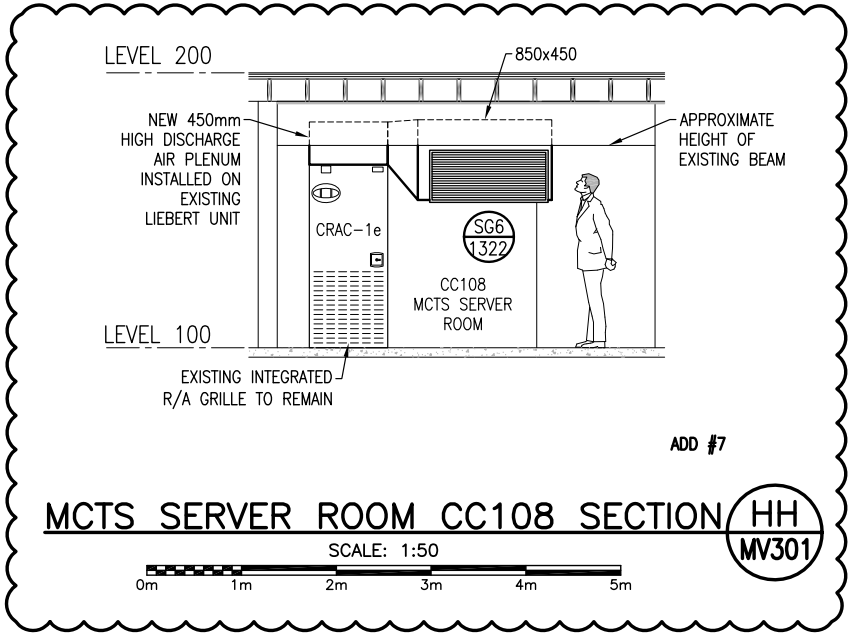

MCTS SERVER ROOM CC108 SECTION HH MV301

SCALE: 1:50

Reference Drawing: 05-MV-301

Addendum #: 7

Public Works and Government Services Canada / Travaux publics et Services gouvernementaux Canada	project / projet: CANADIAN COAST GUARD COLLEGE, SYDNEY, NS MECHANICAL & SPRINKLER UPGRADES	Drawing title / Titre du dessin: 05 -MCTS MCTS SERVER ROOM CC108 SECTIONS	designed / conçu: ACJC	date: 08/10/18
Tender / Soumission: Joan Muise			drawn / dessiné: MAC	date: 08/10/18
PWGSC Project Manager / Administrateur de projets TPSGC		project number / no. du projet: R.065476.700	approved / approuvé: RJK	date: 08/10/18
			drawing no. / no. du dessin: 05-MV-SK002	

PWGSC L2 (2004)

E-DRM/GDD-E: 538447

05 – MCTS/MACKENZIE – SIDEWALL SUPPLY GRILLE SCHEDULE

MARK	TYPE	STYLE	NECK SIZE (mm)	FACE SIZE (L/s)	CAPACITY (L/S)	NC LEVEL	SP (Pa)	COMMENTS
SG5	LOUVERED FACE SUPPLY	DOUBLE DEFLECTION	1200x500	1250x550	1322	NC–20	14.9	ADD #7
SG6	LOUVERED FACE SUPPLY	DOUBLE DEFLECTION	800x750	850x800	1322	NC–20	14.9	
SG7	LOUVERED FACE SUPPLY	DOUBLE DEFLECTION	750x450	800x500	660	NC–19	10.5	

05 – MCTS/MACKENZIE – SIDEWALL RETURN/EXHAUST GRILLE SCHEDULE

MARK	TYPE	STYLE	GRILLE FACE (mm)	OVERALL SIZE (mm)	CAPACITY (L/S)	NC LEVEL	SP (Pa)	COMMENTS
RG11/EG11	LOUVERED FACE EXHAUST/RETURN	FIXED 45° DEFLECTION	800x750	850x800	1322	NC–30	19.9	ADD #7 –

Reference Drawing: 05–MV–601

Addendum #: 7

Public Works and Government Services Canada / Travaux publics et Services gouvernementaux Canada

Tender / Soumission

Joan Muise — PWGSC Project Manager / Administrateur de projets TPSGC

08/10/18

project / projet

CANADIAN COAST GUARD COLLEGE, SYDNEY, NS MECHANICAL & SPRINKLER UPGRADES

Drawing title / Titre du dessin

05 – MCTS – SIDEWALL SUPPLY, EXHAUST, & RETURN GRILLE SCHEDULES REVISIONS

project number / no. du projet: R.065476.700

designed / conçu	ACJC	date 08/10/18
drawn / dessiné	MAC	date 08/10/18
approved / approuvé	RJK	date 08/10/18

drawing no. / no. du dessin: 05–MV–SK003

PWGSC L1 (2004)

E–DRM/GDD–E: 538447

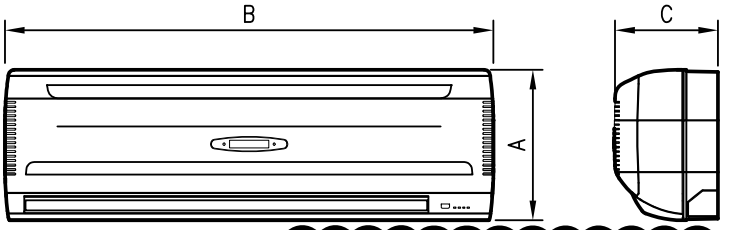

UNIT DIMENSIONS					
NOMINAL CAPACITY (kW)	DIMENSION			WEIGHT (kg)	BRANCH PIPE CONN. (mm)
	A	B	C		
1.45	298	880	180	9	19ø
2.08	305	990	180	10	19ø
3.45	360	1172	210	15	19ø

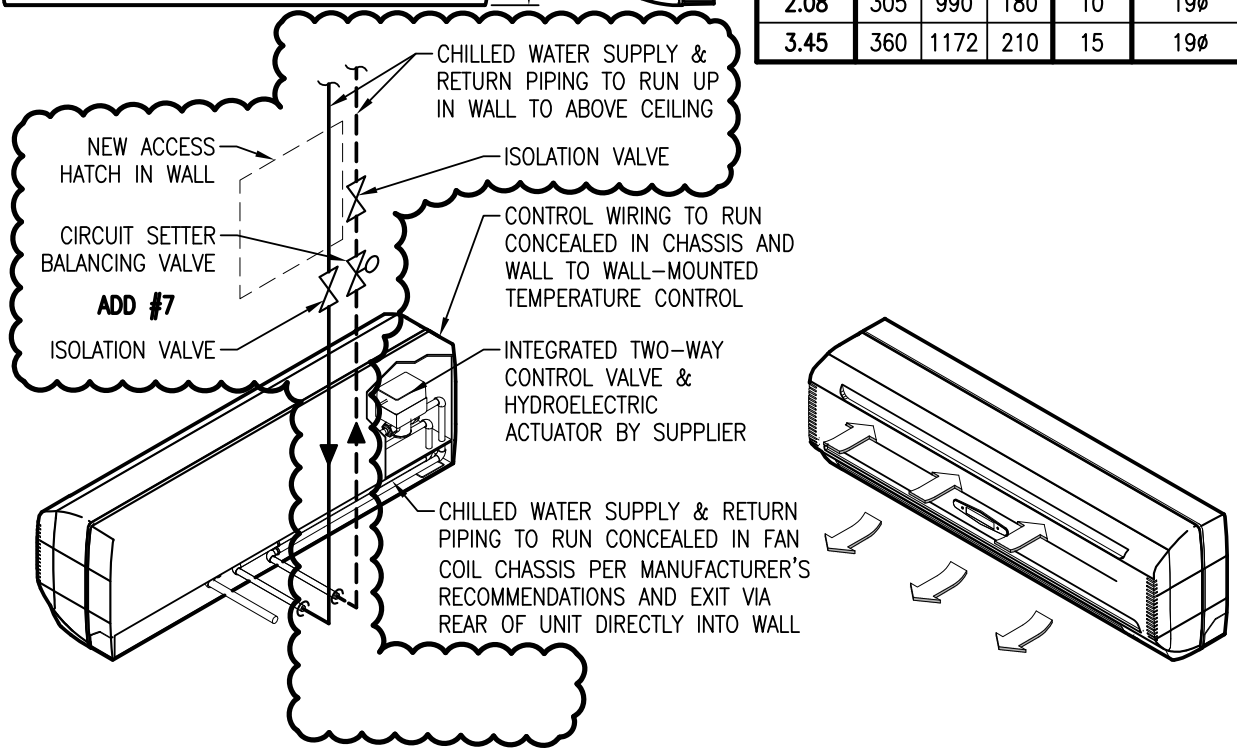

WALL MOUNTED FAN COIL DETAILS – 1.45kW, 2.08kW, & 3.45kW

7
MH502

SCALE : N.T.S.

Reference Drawing: 06–MH–502

Addendum #: 7

Public Works and Government Services Canada / Travaux publics et Services gouvernementaux Canada

project / projet

CANADIAN COAST GUARD COLLEGE, SYDNEY, NS MECHANICAL & SPRINKLER UPGRADES

Drawing title / Titre du dessin

HVAC PIPING WALL MOUNTED FAN COIL DETAIL REVISIONS

designed / conçu	date
RJK	08/10/18
drawn / dessiné	date
RAFH	08/10/18
approved / approuvé	date
RJK	08/10/18

Tender / Soumission

Joan Muise
PWGSC Project Manager / Administrateur de projets TPSGC

project number / no. du projet	drawing no. / no. du dessin
R.065476.700	06–MH–SK004

PWGSC L1P (2004)

E–DRM/GDD–E: 538447

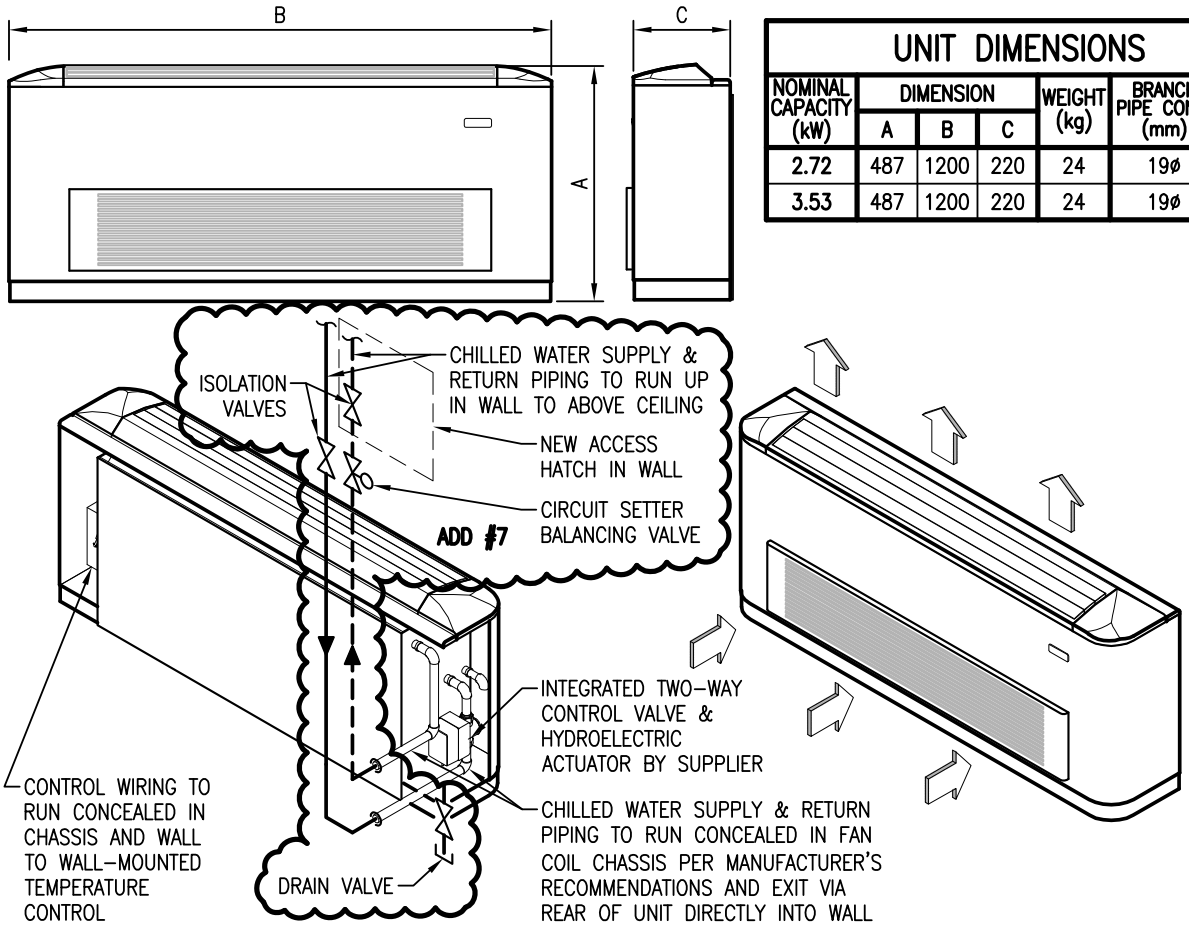

UNIT DIMENSIONS

NOMINAL CAPACITY (kW)	DIMENSION A	DIMENSION B	DIMENSION C	WEIGHT (kg)	BRANCH PIPE CONN. (mm)
2.72	487	1200	220	24	19ø
3.53	487	1200	220	24	19ø

WALL MOUNTED FAN COIL DETAILS – 2.72kW & 3.53kW

8
MH502

SCALE : N.T.S.

Reference Drawing: 06-MH-502

Addendum #: 7

Public Works and Government Services Canada / Travaux publics et Services gouvernementaux Canada

project / projet

CANADIAN COAST GUARD COLLEGE, SYDNEY, NS
MECHANICAL & SPRINKLER UPGRADES

Drawing title / Titre du dessin

HVAC PIPING
WALL MOUNTED FAN
COIL DETAIL REVISIONS

designed / conçu	date
RJK	08/10/18
drawn / dessiné	date
RAFH	08/10/18
approved / approuvé	date
RJK	08/10/18

Tender / Soumission

Joan Muise
PWGSC Project Manager / Administrateur de projets TPSGC

project number / no. du projet: R.065476.700

drawing no. / no. du dessin: 06-MH-SK005

PWGSC L1P (2004)

E-DRM/GDD-E: 538447

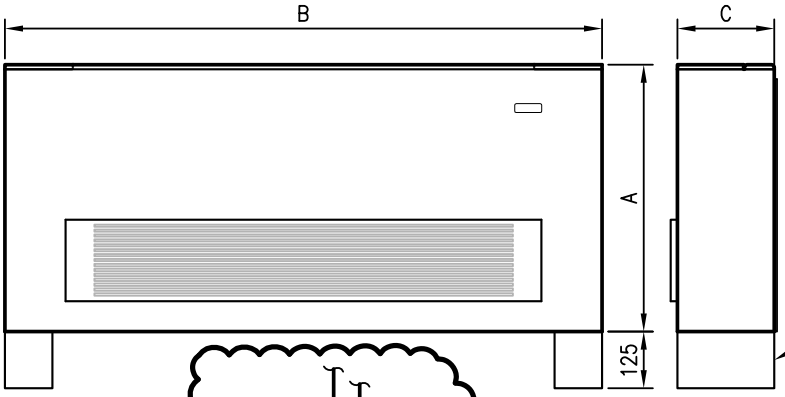

UNIT DIMENSIONS					
NOMINAL CAPACITY (kW)	DIMENSION			WEIGHT (kg)	BRANCH PIPE CONN. (mm)
	A	B	C		
6.93	590	1320	220	34	19ø

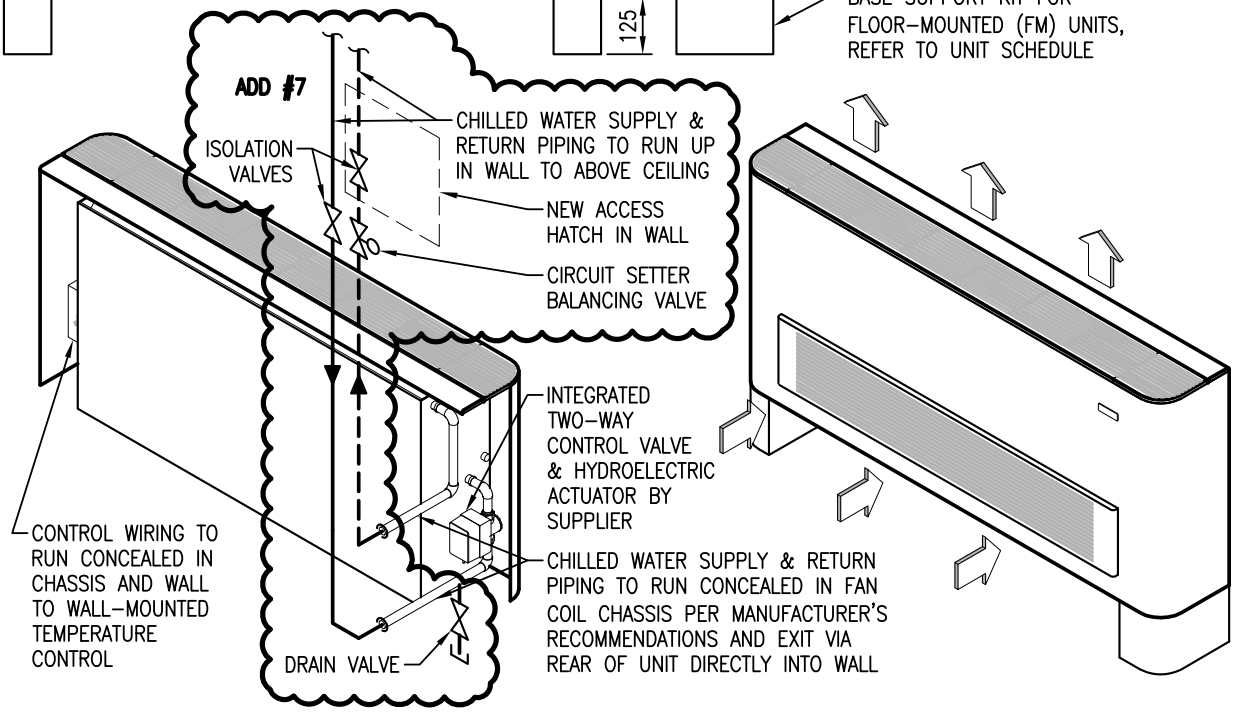

WALL & FLOOR MOUNTED FAN COIL DETAILS – 6.93kW

9
MH502

SCALE : N.T.S.

Reference Drawing: 06-MH-502

Addendum #: 7

Public Works and Government Services Canada / Travaux publics et Services gouvernementaux Canada

project / projet

CANADIAN COAST GUARD COLLEGE, SYDNEY, NS MECHANICAL & SPRINKLER UPGRADES

Drawing title / Titre du dessin

HVAC PIPING WALL MOUNTED FAN COIL DETAIL REVISIONS

designed / conçu	date
RJK	08/10/18
drawn / dessiné	date
RAFH	08/10/18
approved / approuvé	date
RJK	08/10/18

Tender / Soumission

Joan Muise
PWGSC Project Manager / Administrateur de projets TPSGC

project number / no. du projet: R.065476.700

drawing no. / no. du dessin: 06-MH-SK006

PWGSC L1P (2004)

E-DRM/GDD-E: 538447

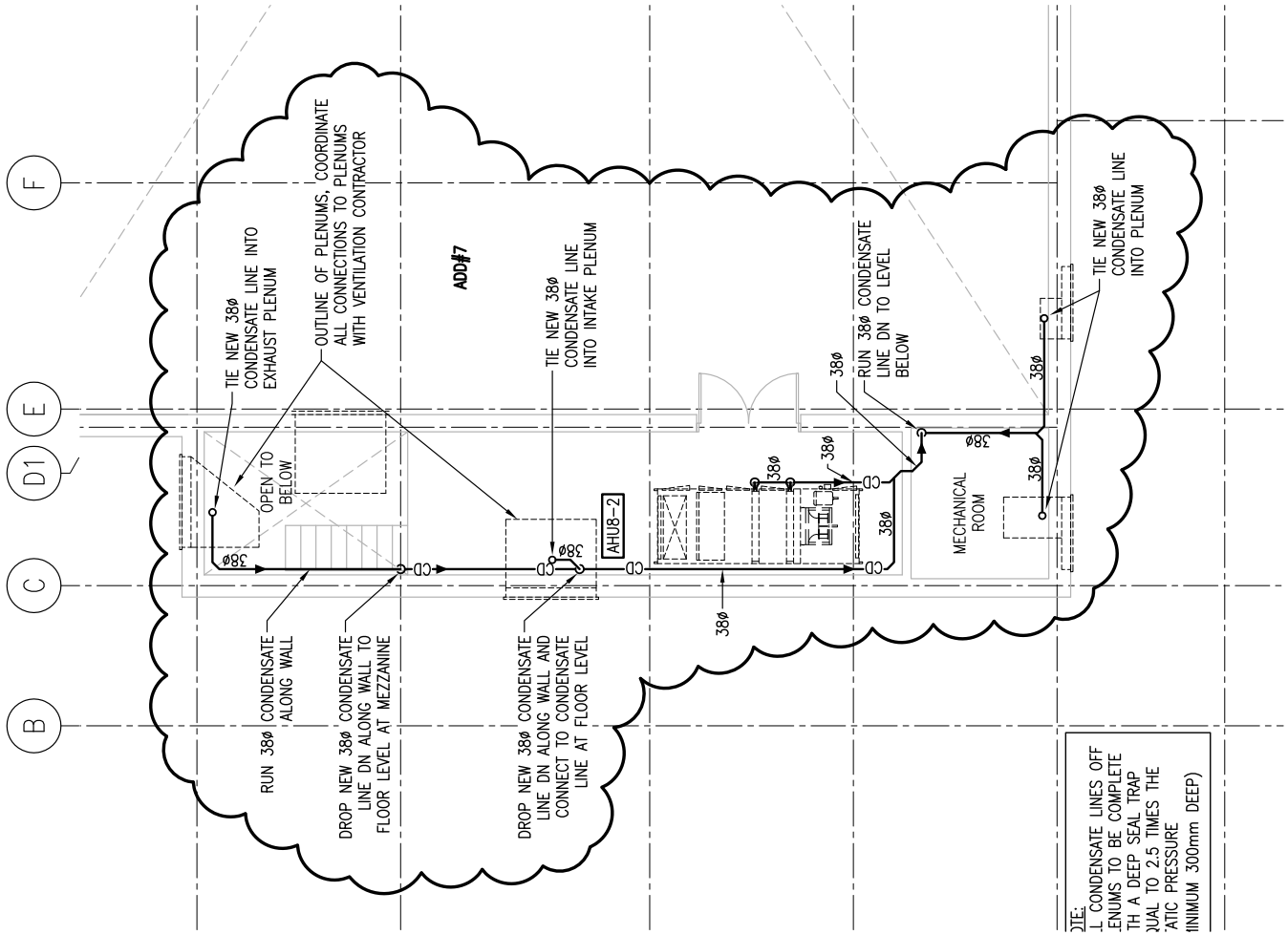

OTE:
L CONDENSATE LINES OFF
ENUMS TO BE COMPLETE
TH A DEEP SEAL TRAP
QUAL TO 2.5 TIMES THE
ATIC PRESSURE
INIMUM 300mm DEEP)

Reference Drawing: 08-MP-102

Addendum #: 7

Public Works and Government Services Canada / Travaux publics et Services gouvernementaux Canada	project / projet: CANADIAN COAST GUARD COLLEGE, SYDNEY, NS MECHANICAL & SPRINKLER UPGRADES	Drawing title / Titre du dessin: D'IBERVILLE CENTRE LEVEL 300 CONDENSATE PIPE SIZING	designed / conçu: MJM — date: 08/10/18
Tender / Soumission: Joan Muise — 08/10/18			drawn / dessiné: SNH — date: 08/10/18
PWGSC Project Manager / Administrateur de projets TPSGC			approved / approuvé: RJK — date: 08/10/18
		project number / no. du projet: R.065476.700	drawing no. / no. du dessin: 08-MP-SK001

PWGSC L2 (2004)

E-DRM/GDD-E: 538447