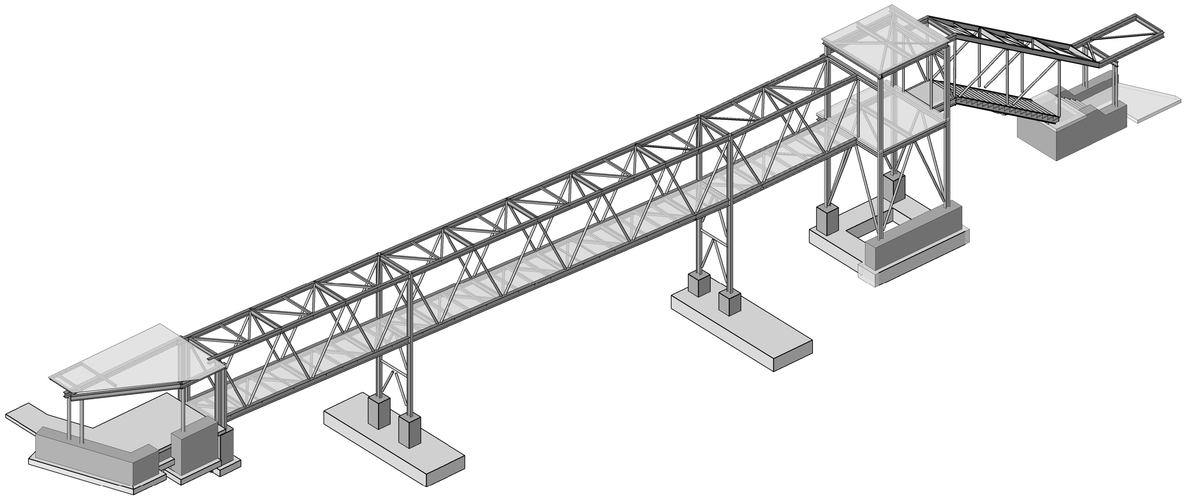

2 S1.00 STRUCTURAL 3D VIEW

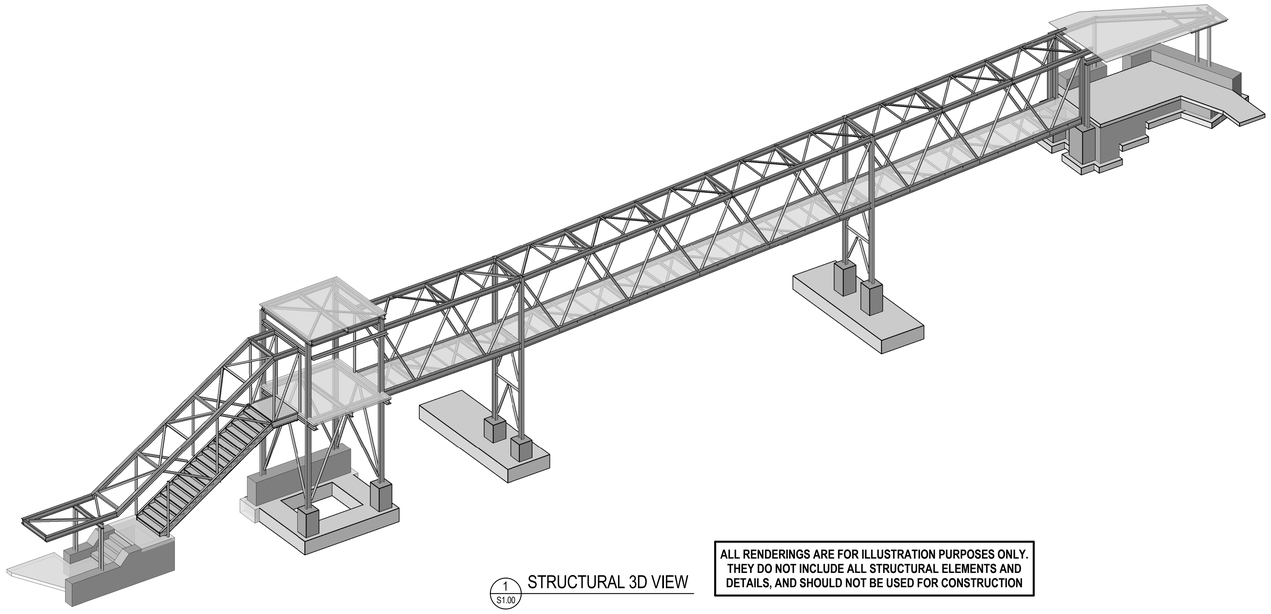

1 S1.00 STRUCTURAL 3D VIEW

ALL RENDERINGS ARE FOR ILLUSTRATION PURPOSES ONLY. THEY DO NOT INCLUDE ALL STRUCTURAL ELEMENTS AND DETAILS, AND SHOULD NOT BE USED FOR CONSTRUCTION

SHEET LIST	
SHEET No	SHEET NAME
S1.00	STRUCTURAL 3D VIEWS
S1.01	STRUCTURAL NOTES AND TYPICAL DETAILS
S2.01	FRAMING PLANS AND ELEVATION
S3.01	FRAMING ELEVATIONS
S5.01	FOUNDATION AND STAIR DETAILS
S5.02	VESTIBULE SECTIONS AND DETAILS
S5.03	STEEL SECTION AND DETAILS

numberTEN architectural group

wsp

JOB No.: 171-16182-00

PROFESSIONAL ENGINEER — J. W. GALLOWAY — BRITISH COLUMBIA

2018-08-07

Revision	Description/Description	Date/Date
D	RE-ISSUED FOR TENDER	2018-02-02
C	ISSUE FOR TENDER	2018-01-08

Client/client

FISHERIES AND OCEANS, REAL PROPERTY, SAFETY AND SECURITY

VANCOUVER, BC
200-401 BURRARD ST.

Project title/Titre du projet

DFO HANGAR BUILDING WALKWAY AND ENTRY VESTIBULE

Consultant Signature Box Only

Designed by/Concept par: **JWG**

Approved by/Approuvée par: **JWG**

Drawn by/Dessine par: **GM**

PWGSC Project Manager/Administrateur de Projets TPSGC: --

PWGSC, Regional Manager, Architectural and Engineering Services/ Gestionnaire régionale, Services d'architectural et de génie, TPSGC: --

Drawing title/Titre du dessin

STRUCTURAL 3D VIEWS

Project No./No. du projet	Sheet/ Feuille	Revision no./ La Révision no.
R.000000.000	S1.00	D

8/7/2018 12:47:23 PM

PWGSC – B1 – 1000X707

DM5XXXXXX

GENERAL

1. THIS IS A METRIC PROJECT. UNLESS OTHERWISE NOTED, ALL DIMENSIONS ARE IN MILLIMETERS AND ALL FORCES ARE IN METRIC UNITS.
2. "WSP-S" REFERS TO WSP CANADA STRUCTURAL CONSULTANT.
3. PRIOR TO CONSTRUCTION, REVIEW STRUCTURAL DRAWINGS IN CONJUNCTION WITH DRAWINGS PROVIDED BY ALL OTHER CONSULTANTS. CONFIRM ALL DIMENSIONS, ELEVATIONS AND HEADROOM CLEARANCES, AND COORDINATE ALL OPENINGS, SLEEVES AND EMBEDDED ITEMS.
4. REPORT ANY DISCREPANCIES OR CONFLICTS BEFORE PROCEEDING WITH THE WORK.
5. DO NOT CUT OR DRILL ANY OPENINGS IN STRUCTURAL MEMBERS WITHOUT WRITTEN PERMISSION FROM WSP-S.
6. VERIFY EXISTING DIMENSIONS AND CONDITIONS ON SITE PRIOR TO CONSTRUCTION.
7. USE THESE DRAWINGS ONLY FOR THE PURPOSE IDENTIFIED IN THE REVISIONS COLUMN. DO NOT CONSTRUCT FROM THESE DRAWINGS UNLESS MARKED "ISSUED FOR CONSTRUCTION".
8. DO NOT USE INFORMATION ON THESE DRAWINGS FOR ANY OTHER PROJECT OR WORKS.
9. DO NOT SCALE THESE DRAWINGS.
10. ALL SECTIONS, DETAILS AND STATEMENTS NOTED AS "TYPICAL" APPLY TO LIKE / SIMILAR CONDITIONS IN THE STRUCTURE.
11. REFER TO ARCHITECTURAL DRAWINGS AND SPECIFICATIONS FOR WATERPROOFING, SEALERS, ETC.
12. REFER TO GEOTECHNICAL REPORT AND ARCHITECTURAL / CIVIL DRAWINGS AND SPECIFICATIONS FOR ALL SOIL WORKS.
13. DRAWINGS SHOW COMPLETED STRUCTURE ONLY. THEY DO NOT SHOW TEMPORARY WORKS FOR WHICH THE CONTRACTOR IS RESPONSIBLE AND WHICH MAY BE REQUIRED FOR EXECUTION OF THE PROJECT, INCLUDING TEMPORARY SHORING, BRACING, GUYS AND TIE DOWNS. THE CONTRACTOR TO ESTABLISH CONSTRUCTION PROCEDURE AND SEQUENCE TO ENSURE SAFETY OF THE WHOLE STRUCTURE AND ALL ITS COMPONENTS DURING ERECTION.
14. EXTENT OF ALL TEMPORARY SHORING FOR EXCAVATION WHICH MAY BE REQUIRED IS NOT NECESSARILY SHOWN ON STRUCTURAL DRAWINGS. CONTRACTOR TO DETERMINE. REFER TO SPECIFICATIONS FOR TEMPORARY SHORING REQUIREMENTS. DESIGN AND CONSTRUCTION REVIEW OF ALL TEMPORARY WORKS TO BE CARRIED OUT BY A PROFESSIONAL ENGINEER RETAINED BY THE CONTRACTOR, LICENSED IN THE PLACE WHERE THE PROJECT IS LOCATED.
15. FOR INSPECTION AND TESTING REQUIREMENTS, REFER TO SPECIFICATIONS.
16. IN CASE OF DISCREPANCY BETWEEN GENERAL NOTES, DRAWINGS AND SPECIFICATIONS, COMPLY WITH THE MOST STRINGENT REQUIREMENTS.

DESIGN DATA

1. STRUCTURAL DESIGN IS IN ACCORDANCE WITH THE 2015 NATIONAL BUILDING CODE OF CANADA SUPPLEMENTED BY THE USER'S GUIDE - NBC 2015 STRUCTURAL COMMENTARIES.
2. CONCRETE ELEMENTS ARE DESIGNED PER CSA A23.3-14 - DESIGN OF CONCRETE STRUCTURES.
3. STEEL ELEMENTS ARE DESIGNED PER CSA S16-14 - LIMIT STATE DESIGN OF STEEL STRUCTURES.
4. SAWN LUMBER AND GLUE LAMINATED LUMBER STRUCTURAL ELEMENTS ARE DESIGNED PER CSA O86-14- ENGINEERING DESIGN IN WOOD.
5. THE VALUES FOR CLIMATIC DATA USED IN THE DETERMINATION OF DESIGN LOADS HAVE BEEN OBTAINED FROM THE 2015 NBC FOR THE SPECIFIC LOCATION OF SIDNEY & NORTH SAANICH, BRITISH COLUMBIA.
6. BASED ON THE USE AND OCCUPANCY, THE STRUCTURE IS DESIGNED TO THE REQUIREMENTS OF A NORMAL IMPORTANCE CATEGORY.
7. SELF WEIGHT (SWT) IS DUE TO THE WEIGHT OF THE STRUCTURE ITSELF. IT VARIES WITH THE STRUCTURAL SYSTEM, AND INCLUDES CONCRETE TOPPINGS ON STEEL DECK.
8. DEAD LOAD (DL) IS THE SELF WEIGHT OF THE STRUCTURE PLUS THE SUPERIMPOSED DEAD LOAD.
9. UNLESS OTHERWISE NOTED, DESIGN LOADS SHOWN ON DRAWINGS ARE SPECIFIED (UNFACTORED) LOADS, TO BE USED FOR ULS DESIGN. FOR SLS DESIGN, THESE LOADS CAN BE REDUCED BY MULTIPLYING WITH THE RATIO OF APPROPRIATE IMPORTANCE FACTORS Is(SLS) / Iv(ULS) GIVEN BELOW.
10. SNOW (NORTH SAANICH):

    Ss = 2.0 kPa Sr = 0.3 kPa Is (ULS) = 1.0 Is (SLS) = 0.9

    MINIMUM UNFACTORED SNOW LOAD = 1.1 kPa x Is
11. LATERAL LOADS IN THIS STRUCTURE ARE RESISTED BY BRACED FRAMES & CANTILEVER COLUMNS FIXED AT BASE, AND ARE DETERMINED BASED ON THE WIND AND SEISMIC DATA BELOW.
12. WIND:

    q50 = 0.42 kPa Iw (ULS) = 1.0 Iw (SLS) = 0.75 TERRAIN TYPE: OPEN
13. SEISMIC (SIDNEY):

    Sa(0.2) = 1.23 PGA = 0.545
    Sa(0.5) = 1.10 Rd = 1.5
    Sa(1.0) = 0.63 Ro = 1.3 SITE CLASSIFICATION = D [TO BE CONFIRMED]
    Sa(2.0) = 0.37 Ie = 1.0
    Sa(5.0) = 0.12
    Sa(10.0) = 0.04

FIELD REVIEW

1. WSP-S WILL PROVIDE PERIODIC FIELD REVIEW OF A REPRESENTATIVE SAMPLE OF THE STRUCTURAL WORKS DETAILED ON THESE DRAWINGS FOR GENERAL CONFORMANCE WITH CONTRACT DOCUMENTS. THESE REVIEWS DO NOT REPLACE THE CONTRACTOR'S RESPONSIBILITY TO IMPLEMENT AND MAINTAIN A QUALITY CONTROL PROGRAM, AND DO NOT MAKE WSP-S A GUARANTOR OF THE CONTRACTOR'S WORK.
2. CONSTRUCTION REVIEW REPORTS WILL OUTLINE ANY DEFICIENCIES FOUND.
3. ASSIST WSP-S DURING FIELD REVIEW, AND PROVIDE SAFE ACCESS TO WORK AREAS AS REQUIRED.
4. CHECK THE WORK PRIOR TO FIELD REVIEW TO CONFIRM IT IS COMPLETED AND IN ACCORDANCE WITH CONTRACT DOCUMENTS.
5. BRING TO THE ATTENTION OF WSP-S ANY DEFICIENCIES FOUND IN THE WORK TOGETHER WITH A PROPOSAL FOR REMEDY. WSP-S WILL DECIDE WHAT CORRECTIVE ACTION MAY BE TAKEN AND ISSUE THE NECESSARY INSTRUCTIONS.
6. PROVIDE REASONABLE NOTICE (NOT LESS THAN 24 HOURS) TO ALLOW FOR THE FIELD REVIEW OF THE FOLLOWING:

a.	CONCRETE WALLS, BEAMS	BEFORE CLOSING FORMSAND COLUMNS
b.	ALL OTHER CONCRETE	BEFORE EACH CONCRETE POUR
c.	STRUCTURAL STEEL	BEFORE COVERING UP OR PLACING STEEL DECK
d.	METAL FLOOR DECK	BEFORE PLACING CONCRETE
e.	METAL ROOF DECK	BEFORE ROOFING
f.	WOOD FRAMING	BEFORE COVERING UP

FOUNDATIONS

1. FOUNDATIONS ARE TO BE SUPPORTED BY UNDISTURBED GROUND. BEARING SURFACES ARE TO BE APPROVED BY A GEOTECHNICAL ENGINEER PRIOR TO FOOTING CONCRETE BEING PLACED.
2. ASSUMED FOOTING BEARING RESISTANCE:
   150 kPa AT ULS (ULTIMATE LIMIT STATES DESIGN)
   100 kPa AT SLS (SERVICEABILITY LIMIT STATES DESIGN)
   GEOTECHNICAL ENGINEER TO CONFIRM BEARING CAPACITY UPON EXCAVATION.
3. CONSTRUCT ALL FOOTINGS ON STRATA CAPABLE TO PROVIDE THE BEARING RESISTANCE NOTED, BUT NOT ABOVE THE ELEVATIONS INDICATED ON DRAWINGS.
4. IF THE ASSUMED BEARING RESISTANCE IS NOT OBTAINED AT THE UNDERSIDE OF FOOTING ELEVATION INDICATED ON DRAWINGS, EXTEND EXCAVATION UNTIL COMPETENT SOIL IS REACHED, AND PROVIDE LEAN CONCRETE FILL (OR CONCRETE SAME AS SPECIFIED FOR THE FOOTING) TO UNDERSIDE OF FOOTING. DO NOT DROP DOWELS; MAINTAIN THE SPECIFIED PROJECTION REQUIRED FOR LAPS.
5. FOR FROST PROTECTION, MINIMUM DISTANCE FROM FINISHED GRADE TO UNDERSIDE OF FOOTINGS, 457mm (18").
6. UNLESS OTHERWISE NOTED, CENTRE FOOTINGS, PIERS, PILES AND PILE CAPS UNDER CENTROID OF COLUMNS. WHERE THERE ARE NO COLUMNS ABOVE, CENTER UNDER WALLS OR GRADE BEAMS.
7. LOCATE ALL EXISTING UNDERGROUND SERVICES PRIOR TO EXCAVATION.
8. THE LINE OF SLOPE BETWEEN ADJACENT EXCAVATIONS FOR FOOTINGS OR TRENCHES NOT TO EXCEED A RISE OF 1 IN A RUN OF 2.
9. KEEP EXCAVATION DRAINED AND FREE OF WATER AT ALL TIMES.
10. PROTECT FOOTINGS, GRADE BEAMS, FOUNDATION WALLS, SLABS-ON-GRADE AND ADJACENT SOIL AGAINST FREEZING AND FROST ACTION AT ALL TIMES DURING CONSTRUCTION. DO NOT POUR CONCRETE AGAINST FROZEN EARTH.
11. PLACE ANCHOR RODS AND DOWELS BEFORE CONCRETE IS CAST. USE TEMPLATES TO KEEP IN POSITION.
12. DO NOT BACKFILL AGAINST WALLS RETAINING EARTH UNTIL ELEMENTS PROVIDING LATERAL SUPPORT, INCLUDING SLAB ON GRADE AND ALL SUSPENDED LEVELS, ARE COMPLETED AND CONCRETE HAS REACHED 75% OF ITS DESIGN STRENGTH.
13. FOR ELEMENTS THAT ARE TO BE BACKFILLED ON BOTH SIDES, PLACE BACKFILL SIMULTANEOUSLY ON BOTH SIDES SUCH THAT HEIGHTS DO NOT VARY BY MORE THAN 600 (2'-0") FROM ONE SIDE TO THE OTHER.

CAST-IN-PLACE CONCRETE

1. NOMINAL MAXIMUM SIZE OF COARSE AGGREGATE TO BE 20 (3/4") UNLESS NOTED OTHERWISE.
2. UNLESS NOTED OTHERWISE, CONCRETE TO BE IN ACCORDANCE WITH THE FOLLOWING SCHEDULE:

ELEMENT	COMPRESSIVE STRENGTH (MPa) AT 28 DAYS (SEE NOTE #3 BELOW)	EXPOSURE CLASS	SPECIAL REQUIREMENTS & REMARKS
FOOTINGS	25	F2	REFER TO NOTE 3
RETAINING WALLS & PIERS	35	C1	REFER TO NOTE 3
EXTERIOR SLAB ON GRADE	35	C1	REFER TO NOTE 3
SLABS ON STEEL DECK	35	C1	REFER TO NOTE 3

3. REFER TO CSA A23.1 FOR THE MAXIMUM WATER/CEMENT RATIO, MINIMUM COMPRESSIVE STRENGTH, AIR CONTENT, CURING REQUIREMENTS, CHLORIDE ION PENETRABILITY AND ALTERNATE CEMENT TYPES TO MEET THE REQUIREMENTS FOR THE NOTED EXPOSURE CLASS.
4. DO NOT ADD WATER TO CONCRETE ON SITE.
5. CONVEY CONCRETE FROM TRUCK TO FINAL LOCATION BY METHODS WHICH WILL PREVENT SEPARATION OR LOSS OF MATERIAL. MAXIMUM FREE FALL NOT TO EXCEED 1.5m (5'-0"). CONSOLIDATE CONCRETE USING MECHANICAL VIBRATORS.
6. PLACE CONCRETE AS CLOSE AS POSSIBLE TO FINAL LOCATION TO AVOID SEGREGATION. VIBRATE ALL CONCRETE.
7. PROTECT CONCRETE FROM FREEZING. DO NOT PLACE CONCRETE AGAINST FROZEN GROUND. USE COLD WEATHER CONCRETING METHODS IN ACCORDANCE WITH CSA-A23.1.
8. PROTECT CONCRETE FROM EXCESSIVE HEAT AND DRYING. USE HOT WEATHER CONCRETING METHODS IN ACCORDANCE WITH CSA-A23.1.
9. COLUMNS
   1. DO NOT PLACE RECESSED BOXES IN CONCRETE COLUMNS WITHOUT PRIOR APPROVAL FROM STRUCTURAL CONSULTANT.
   2. WHERE APPLICABLE, COLUMN OFFSETS FROM GRIDLINES ARE NOTED ON DRAWINGS. UPPER COLUMNS ARE CENTRED ON COLUMNS BELOW UNLESS NOTED OTHERWISE.

CONCRETE REINFORCEMENT

1. REINFORCEMENT TO CONFORM TO CSA G30.18, GRADE 400R.
2. BARS MARKED CONTINUOUS TO BE TERMINATED IN STANDARD HOOKS AT ENDS AND SPLICED USING CLASS B LAPS. FOR LAP LENGTHS AND DEVELOPMENT LENGTHS, REFER TO TYPICAL DETAILS TC-REINF-01.
3. ALL REBAR HOOKS TO BE STANDARD LENGTH 90° OR 180° HOOKS. REBAR LENGTHS LISTED ON DRAWINGS DO NOT INCLUDE THE HOOK LENGTH.
4. UNLESS A SPECIFIC STIRRUP SHAPE IS INDICATED ON PLANS OR SCHEDULES, ALL STIRRUPS TO BE CLOSED HOOPS. NUMBER OF STIRRUPS DENOTES THE NUMBER OF FULL STIRRUPS, EACH HAVING TWO LEGS.
5. WHERE TWO BARS OF DIFFERENT SIZE ARE LAPPED IN TENSION, SPLICE LENGTH TO BE EQUAL TO THE SMALLER BAR'S TENSION LAP SPLICE, OR TO THE LARGER BAR'S TENSION DEVELOPMENT LENGTH, WHICHEVER IS LONGER.
6. PROVIDE ADDITIONAL SUPPORT BARS AS REQUIRED TO ADEQUATELY SUPPORT AND SECURE ALL REINFORCEMENT AND PREVENT MOVEMENT WHEN PLACING CONCRETE.
7. PROVIDE SUFFICIENT CHAIRS TO REINFORCING TO MAINTAIN SPECIFIED CONCRETE COVER.
8. ALL REINFORCING TO BE CLEAN, FREE OF LOOSE SCALE, OIL, DIRT, RUST, AND ANY OTHER FOREIGN COATING THAT AFFECT BONDING CAPACITY.
9. MINIMUM CLEAR SPACING BETWEEN ADJACENT BARS TO BE AT LEAST 1.4 TIMES THE BAR DIAMETER OR 1.4 TIMES THE NOMINAL MAXIMUM SIZE OF THE COARSE AGGREGATE, WHICHEVER IS MORE.
10. WHERE PARALLEL REINFORCEMENT IS PLACED IN TWO OR MORE LAYERS, POSITION BARS IN UPPER LAYER DIRECTLY ABOVE THE BARS IN LOWER LAYER, MAINTAINING THE MINIMUM CLEAR SPACING BETWEEN LAYERS AS SPECIFIED ABOVE.
11. CONCRETE PROTECTION ON PRINCIPAL REINFORCING SHALL BE AS FOLLOWS:

    SURFACES PLACED IN CONTACT WITH GROUND: 75mm [3"]
    FORMED SURFACES EXPOSED TO GROUND OR WEATHER: 50mm [2"]
    SUSPENDED SLABS AND SLABBANDS: 25mm [1"]
    BEAMS AND COLUMNS: 50mm [2"]
    COLUMN TIES AND BEAM STIRRUPS: 40mm [1 1/2"]
12. REFER TO TYPICAL DETAIL TC-WALL-01 FOR REINFORCING REQUIRED AT WALL CORNERS AND INTERSERCTIONS.

STRUCTURAL STEEL

1. CONFORM TO CSA S16.
2. MATERIALS: TO CSA G40.21 UNLESS OTHERWISE NOTED, WITH THE FOLLOWING GRADES:

   W, WWF AND S SECTIONS, CHANNELS AND ANGLES: 350W,
   PLATES, BARS: 300W
   HOLLOW STRUCTURAL SECTIONS: 350W (CLASS 'C" OR "H"), ASTM A1085 GRADE 50 (345 MPa
   BOLTS: ASTM F3125 GRADE A325M, UNLESS NOTED
   ANCHOR RODS: ASTM F1554 GRADE 36
3. DETAILS ON STRUCTURAL DRAWINGS SHOW DESIGN INTENT. REFER TO SPECIFICATIONS FOR CONNECTION DESIGN, DETAILING, FABRICATION, AND ERECTION REQUIREMENTS.
4. CONNECT BEAMS FOR THE FORCES SHOWN; IF NO FORCE/CONNECTION IS INDICATED, CONNECT NON COMPOSITE BEAMS FOR THE REACTION DUE TO MAXIMUM UNIFORMLY DISTRIBUTED LOAD CAPACITY OF THE BEAM IN BENDING, AND CONNECT COMPOSITE BEAMS FOR ONE AND A HALF TIMES THE REACTION DUE TO MAXIMUM UNIFORMLY DISTRIBUTED LOAD CAPACITY OF THE NON COMPOSITE SECTION IN BENDING.
5. DO NOT CUT HOLES OR OTHERWISE MODIFY STRUCTURAL MEMBERS ON SITE.
6. PROVIDE ALL ERECTION BRACING REQUIRED TO KEEP THE STRUCTURE STABLE AND IN ALIGNMENT DURING CONSTRUCTION.
7. PROVIDE 40 MPa NON SHRINK GROUT UNDER BASE PLATES. DO NOT APPLY ANY LOADS TO THE STEELWORK BEFORE GROUT ACHIEVES SUFFICIENT STRENGTH.
8. DO NOT APPLY LATERAL LOADS TO MEMBERS UNLESS APPROVED BY THE CONSULTANT.
9. AESS MEMBERS: ERECT USING SOFTENED SLINGS OR OTHER METHODS SUCH THAT THEY ARE NOT DAMAGED. PROVIDE PADDING AS REQUIRED TO PROTECT WHILE RIGGING AND ALIGNING. WELD TABS FOR TEMPORARY BRACINGS AND SAFETY CABLING ONLY AT POINTS CONCEALED FROM VIEW IN THE COMPLETE STRUCTURE OR WHERE APPROVED BY WSP-S.

ROOF & FLOOR DECK ASSEMBLIES

1. CONFORM TO CSA S136 FOR STEEL DECKING, AND TO CAST IN PLACE CONCRETE AND CONCRETE REINFORCEMENT NOTES.
2. STEEL DECK MATERIAL: TO ASTM A653/653M OR ASTM A792/792M, GRADE 230.
3. REQUIRED DECK DEPTH AND CORE NOMINAL THICKNESS ARE SHOWN ON DRAWINGS; PROVIDE DECK PROFILE TO MEET THE LOADING AND PERFORMANCE REQUIREMENTS OUTLINED IN THE SPECIFICATIONS.
4. USE ONLY MECHANICAL ROOF DECK FASTENERS. DO NOT USE WELDING OR CLINCHING.
5. UNLESS OTHERWISE NOTED, DECK WITH CONCRETE TOPPING TO BE A COMPOSITE PROFILE.
6. REFER TO PLANS FOR COVER SLAB THICKNESS. TOTAL SLAB THICKNESS IS EQUAL TO COVER SLAB THICKNESS PLUS DECK DEPTH.
7. CONNECT DECK WITH PINS ALONG SUPPORT MEMBERS IN A 36/7 PATTERN OR AT 150MM OC. SIDELAPS SHALL HAVE SELF-TAPPING SCREWS AT 150MM OC
8. PRIOR TO CONCRETE PLACEMENT, STEEL DECK TO BE FREE OF SOIL, DEBRIS, STANDING WATER, LOSE MIL SCALE, AND OTHER FOREIGN MATTER.

WOOD FRAMING

1. CONFORM TO CSA O86.
2. MATERIALS:

   -LUMBER: GRADE MARKED TO CONFORM TO CSA O141; KILN DRIED; SPF NO. 2 OR BETTER; MOISTURE CONTENT NOT TO EXCEED 19% AT TIME OF MANUFACTURE AND INSTALLATION; UNLESS NOTED OTHERWISE.

   -WOOD BOLTS: ASTM A307

   -LAG/WOOD SCREWS: ANSI/ASME B18.12.1. MACHINE THREADED (NOT CAST-THREADED). PREDRILL PRIOR TO LAG SCREW INSTALLATIONS.
3. UNLESS NOTED OTHERWISE, ALL WOOD FRAMING DETAILS TO BE IN ACCORDANCE WITH PART 9 OF THE REFERENCED BUILDING CODE INCLUDING PLYWOOD ROOF FRAMING AND ROOF FRAMING.
4. PROTECT ALL WOOD PRODUCTS FROM THE ELEMENTS AS REQUIRED TO MAINTAIN THEIR INTEGRITY.

STEPS IN STRIP OR PAD FOOTING — TC-FDN-33

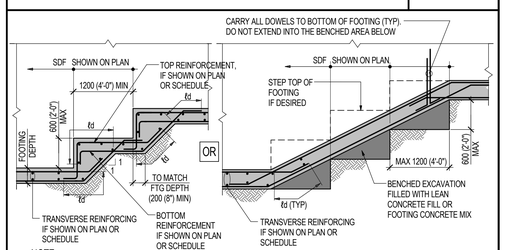

NOTE:

IF REINFORCING IS LOCATED AT FOOTING MIDHEIGHT, DETAIL REBAR SPLICE AS IF THEY WERE BOTTOM BARS

MAY 2017

TENSION DEVELOPMENT LENGTHS AND LAP SPLICES FOR BARS GRADE 400 MPa — TC-REINF-01

TENSION DEVELOPMENT LENGTHS *td* FOR GRADE 400 INDIVIDUAL BLACK BAR IN NORMAL DENSITY CONCRETE

BAR SIZE	fc = 25		fc = 30		fc = 35		fc = 40		fc = 50		fc = 60	
	BOTTOM	TOP	BOTTOM	TOP	BOTTOM	TOP	BOTTOM	TOP	BOTTOM	TOP	BOTTOM	TOP
10	300 (12")	380 (15")	300 (12")	350 (14")	300 (12")	320 (13")	300 (12")	300 (12")	300 (12")	300 (12")	300 (12")	300 (12")
15	440 (17 ")	570 (23")	400 (16")	520 (21")	370 (14")	480 (19")	350 (14")	450 (18")	310 (12")	400 (16")	300 (12")	370 (14")
20	580 (23")	750 (30")	530 (21")	690 (27")	490 (19")	640 (25")	460 (18")	600 (24")	410 (16")	530 (21")	380 (15")	490 (19")
25	900 (36")	1170 (46")	830 (32")	1070 (42")	770 (30")	990 (39")	720 (28")	930 (37")	640 (25")	830 (33")	590 (23")	760 (30")
30	1080 (43")	1410 (55")	990 (39")	1290 (51")	920 (36")	1190 (47")	860 (34")	1110 (44")	770 (30")	1000 (39")	700 (28")	910 (36")
35	1260 (50")	1640 (65")	1160 (46")	1500 (60")	1070 (42")	1390 (55")	1000 (40")	1300 (52")	900 (35")	1160 (46")	820 (32")	1060 (42")
45	1620 (64")	2110 (83")	1480 (59")	1930 (76")	1370 (54")	1780 (71")	1290 (51")	1670 (66")	1150 (46")	1490 (59")	1050 (42")	1360 (54")
55	1980 (78")	2580 (102")	1810 (72")	2350 (93")	1680 (66")	2180 (86")	1570 (62")	2040 (81")	1410 (56")	1820 (72")	1280 (51")	1670 (66")

CLASS B TENSION LAP SPLICE LENGTHS FOR GRADE 400 INDIVIDUAL BLACK BAR IN NORMAL DENSITY CONCRETE

BAR SIZE	fc = 25		fc = 30		fc = 35		fc = 40		fc = 50		fc = 60	
	BOTTOM	TOP	BOTTOM	TOP	BOTTOM	TOP	BOTTOM	TOP	BOTTOM	TOP	BOTTOM	TOP
10	390 (16")	490 (19")	390 (16")	450 (18")	390 (16")	420 (17")	390 (16")	390 (16")	390 (16")	390 (16")	390 (16")	390 (16")
15	570 (23")	740 (29")	520 (21")	670 (27")	480 (19")	620 (25")	450 (18")	580 (23")	400 (16")	520 (20")	390 (16")	480 (19")
20	750 (29")	980 (39")	690 (27")	890 (35")	640 (25")	830 (33")	600 (24")	770 (30")	530 (21")	690 (27")	490 (19")	630 (25")
25	1170 (46")	1530 (61")	1070 (42")	1390 (55")	990 (39")	1290 (51")	930 (37")	1210 (48")	830 (33")	1080 (43")	760 (30")	990 (39")
30	1410 (56")	1830 (72")	1290 (51")	1670 (66")	1190 (47")	1550 (61")	1110 (44")	1450 (57")	1000 (39")	1300 (51")	910 (36")	1180 (46")
35	1640 (65")	2130 (84")	1500 (60")	1950 (77")	1390 (55")	1800 (72")	1300 (52")	1690 (67")	1160 (46")	1510 (59")	1060 (42")	1380 (54")

- FOR EPOXY BARS MULTIPLY VALUES IN TABLE BY 1.5 EXCEPT THAT A MULTIPLIER OF 1.2 CAN BE USED WHEN CLEAR COVER IS MORE THAN 3x BAR DIAMETER AND CLEAR SPACING BETWEEN BARS IS MORE THAN 6x BAR DIAMETER.
- FOR SEMI LOW DENSITY CONCRETE (1850< Yc ≤ 2150 kg/m³) MULTIPLY VALUES IN TABLE BY 1.2. FOR LOW DENSITY CONCRETE (Yc ≤ 1850 kg/m³) MULTIPLY VALUES IN TABLE BY 1.3.
- FOR BUNDLED BARS, MULTIPLY VALUES IN TABLE BY 1.1 FOR A TWO BAR BUNDLE, 1.2 FOR A THREE BAR BUNDLE AND 1.33 FOR A FOUR BAR BUNDLE
- "TOP" MEANS THAT THERE IS MORE THAN 300 (12") OF CONCRETE BELOW, AND LESS THAN 300 (12") OF CONCRETE ABOVE THE HORIZONTAL BAR WITHIN THE INDIVIDUAL CONCRETE POUR. ALL HORIZONTAL BARS IN WALLS TO BE CONSIDERED "TOP".
- ALL VERTICAL BARS ARE CONSIDERED "BOTTOM"

MINIMUM TENSION EMBEDMENT LENGTHS WITH STANDARD END HOOKS *td*h, FOR GRADE 400 BAR IN NORMAL WEIGHT CONCRETE

BAR SIZE	fc = 25	fc = 30	fc = 35	fc = 40	fc = 50	fc = 60
10	150 (6")	150 (6")	150 (6")	150 (6")	150 (6")	150 (6")
15	210 (8")	200 (8")	180 (7")	170 (7")	150 (6")	150 (6")
20	280 (11")	260 (10")	240 (10")	230 (9")	190 (8")	190 (8")
25	350 (14")	320 (13")	300 (12")	280 (11")	240 (9")	230 (9")
30	420 (17")	390 (16")	360 (14")	340 (14")	290 (11")	280 (11")
35	490 (20")	450 (18")	420 (17")	390 (16")	340 (13")	320 (13")

- FOR EPOXY BARS MULTIPLY VALUES IN TABLE BY 1.2
- FOR LOW DENSITY CONCRETE (Yc ≤ 1850 kg/m³) MULTIPLY VALUES IN TABLE BY 1.3
- FOR HOOKS WITH COVER LESS THAN SHOWN IN DETAILS 'A', 'B' AND 'C' MULTIPLY VALUES IN TABLE BY 1.5

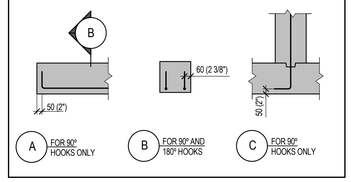

FOR VALUES NOT PROVIDED IN TABLES INTERPOLATE BETWEEN THE NEAREST VALUES PROVIDED.

JUNE 2017

CONCRETE WALL CORNERS AND INTERSECTIONS — TC-WALL-01

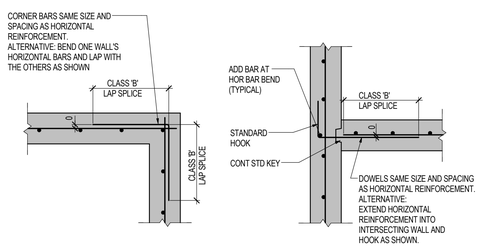

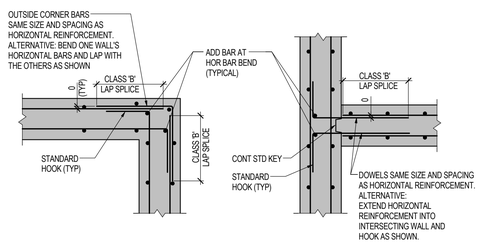

NOTES:

1. IF WALLS ARE NOT PERPENDICULAR TO EACH OTHER, ALL BAR BENDS TO MATCH THE WALL INTERSECTION ANGLE.
2. FOR SHEAR WALL CORNER AND INTERSECTION DETAILS, SEE **TC-WALL-41 TO TC-WALL-43**

JUNE 2017

numberTEN architectural group

wsp

JOB No.: 171-16182-00

PROFESSIONAL ENGINEER — PROVINCE OF BRITISH COLUMBIA — D. W. GALLOWAY — 2018-08-07

Revision	Description/Description	Date/Date
D	RE-ISSUED FOR TENDER	2018-02-02
C	ISSUE FOR TENDER	2018-01-08
B	100% SUBMISSION	2017-12-22
A	95% REVIEW SUBMISSION	2017-12-05

Client/client

FISHERIES AND OCEANS, REAL PROPERTY, SAFETY AND SECURITY

VANCOUVER, BC
200-401 BURRARD ST.

Project title/Titre du projet

DFO HANGAR BUILDING WALKWAY AND ENTRY VESTIBULE

Consultant Signature Box Only

Designed by/Concept par	Approved by/Approuvée par
DJ/JWG	JWG

Drawn by/Dessine par: GM

PWGSC Project Manager/Administrateur de Projets TPSGC: --

PWGSC, Regional Manager, Architectural and Engineering Services/ Gestionnaire régionale, Services d'architectural et de génie, TPSGC: --

Drawing title/Titre du dessin

STRUCTURAL NOTES AND TYPICAL DETAILS

Project No./No. du projet	Sheet/ Feuille	Revision no./ La Révision no.
R.000000.000	S1.01	D

8/7/2018 12:47:24 PM

PWGSC – R1 – 1000x707

DM5XXXXXX

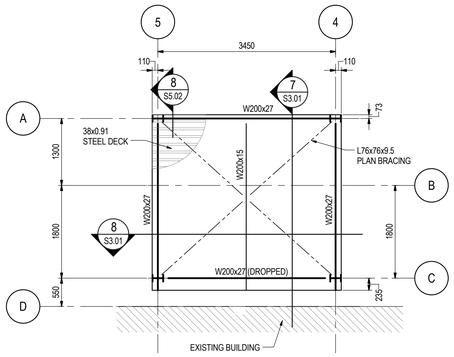

5 S2.01 VESTIBULE ROOF FRAMING PLAN
1 : 50

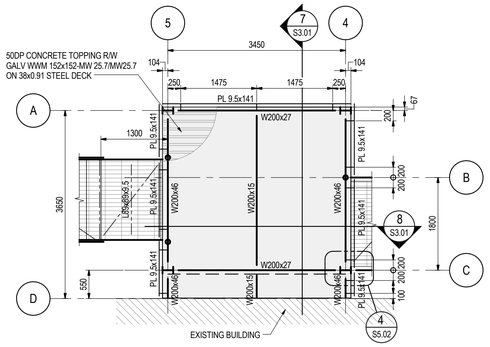

6 S2.01 VESTIBULE FLOOR FRAMING PLAN
1 : 50

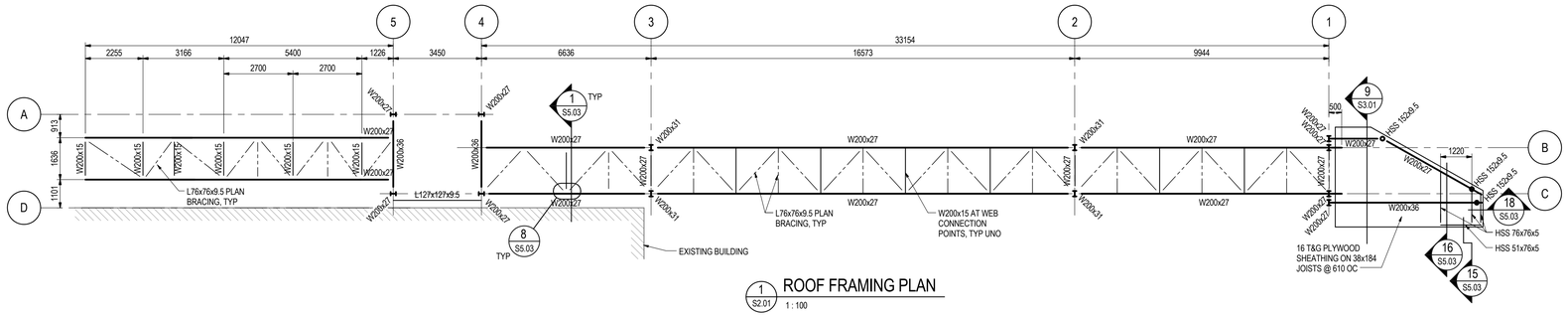

1 S2.01 ROOF FRAMING PLAN
1 : 100

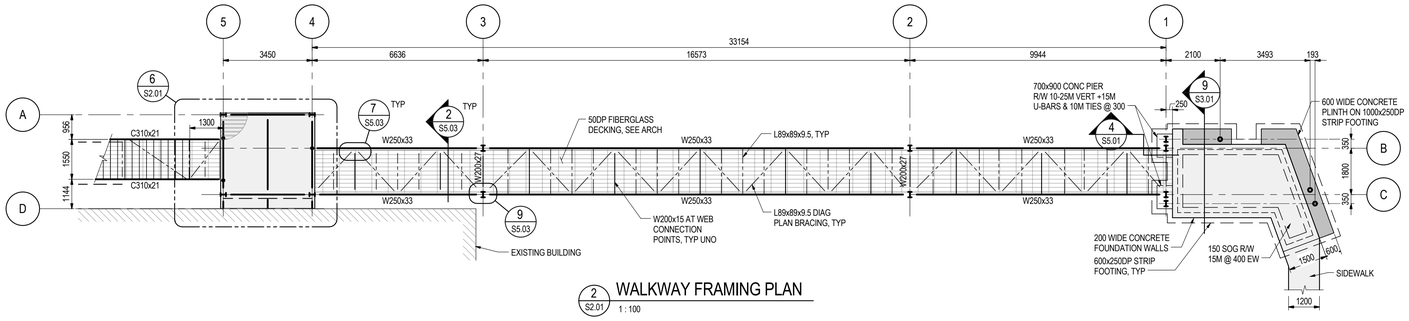

2 S2.01 WALKWAY FRAMING PLAN
1 : 100

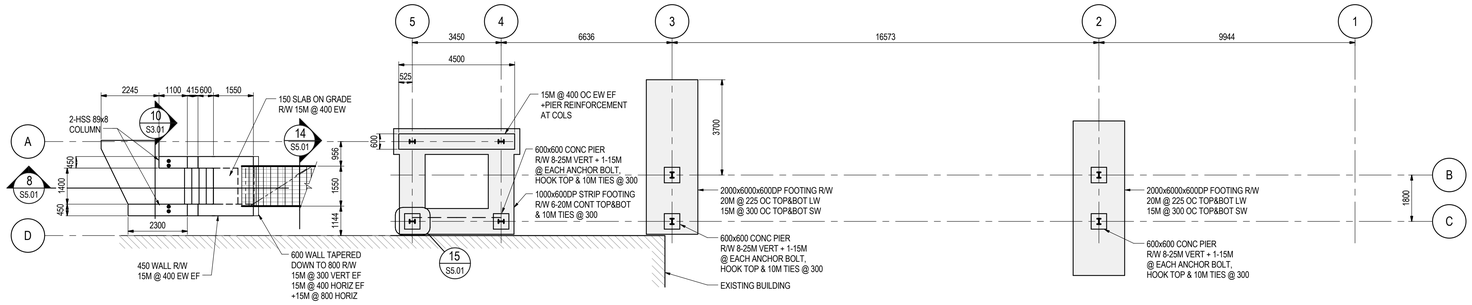

3 S2.01 FOUNDATION PLAN
1 : 100

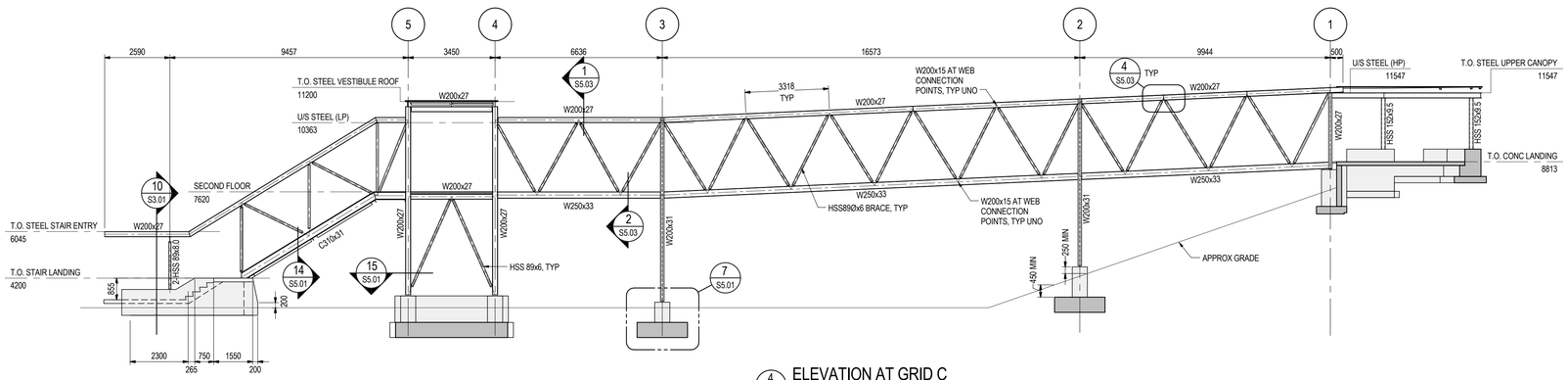

4 S2.01 ELEVATION AT GRID C
1 : 100

numberTEN architectural group

wsp

JOB No.: 171-16182-00

PROFESSIONAL ENGINEER — J. W. GALLOWAY — BRITISH COLUMBIA

2018-08-07

Revision	Description/Description	Date/Date
D	RE-ISSUED FOR TENDER	2018-02-02
C	ISSUE FOR TENDER	2018-01-08
B	100% SUBMISSION	2017-12-22
A	95% REVIEW SUBMISSION	2017-12-05

Client/client

FISHERIES AND OCEANS, REAL PROPERTY, SAFETY AND SECURITY

VANCOUVER, BC
200-401 BURRARD ST.

Project title/Titre du projet

DFO HANGAR BUILDING WALKWAY AND ENTRY VESTIBULE

Consultant Signature Box Only

Designed by/Concept par	Approved by/Approuvée par
DJ/JWG	JWG

Drawn by/Dessine par: GM

PWGSC Project Manager/Administrateur de Projets TPSGC: --

PWGSC, Regional Manager, Architectural and Engineering Services/ Gestionnaire régionale, Services d'architectural et de génie, TPSGC: --

Drawing title/Titre du dessin

FRAMING PLANS AND ELEVATION

Project No./No. du projet	Sheet/ Feuille	Revision no./ La Révision no.
R.000000.000	S2.01	D

8/7/2018 12:47:26 PM

PWGSC – B1 – 1000x707

DM5XXXXXX

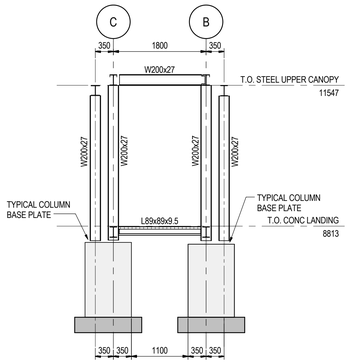

1 S3.01 ELEVATION AT GRID 1
1 : 50

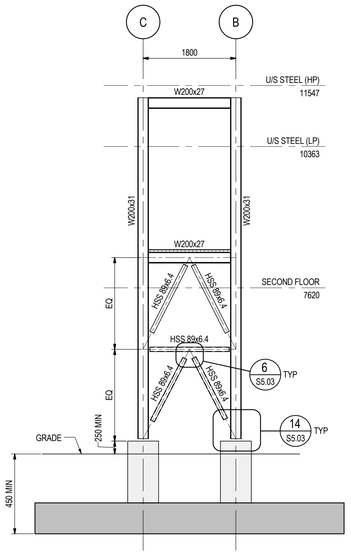

2 S3.01 ELEVATION AT GRID 2
1 : 50

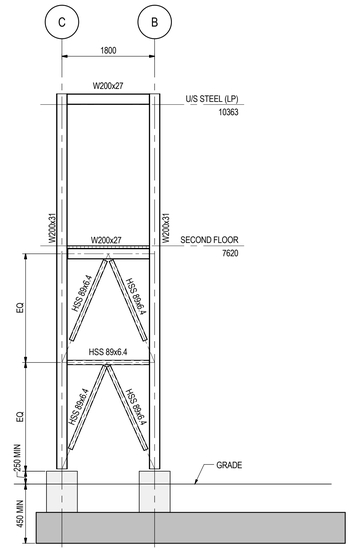

3 S3.01 ELEVATION AT GRID 3
1 : 50

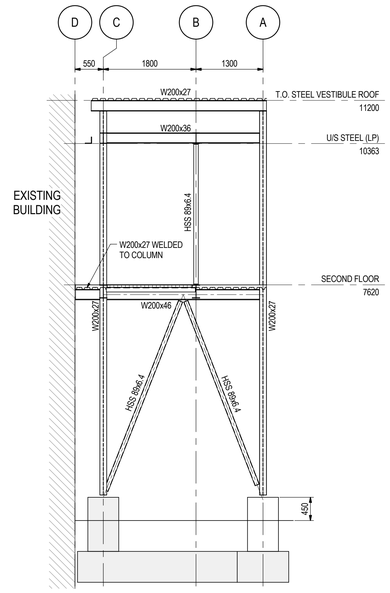

4 S3.01 ELEVATION AT GRID 4
1 : 50

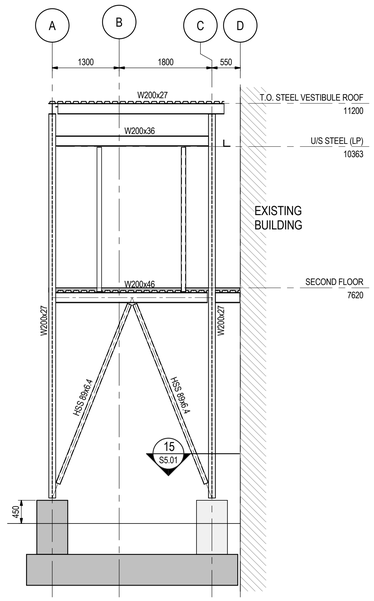

5 S3.01 ELEVATION AT GRID 5
1 : 50

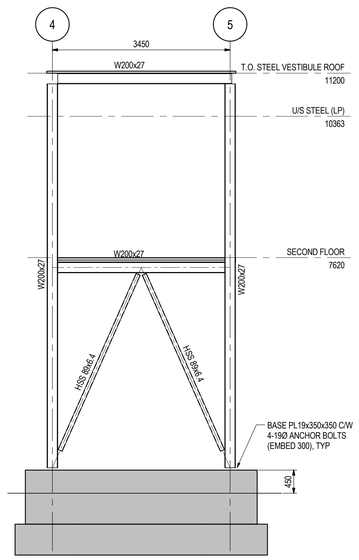

6 S3.01 ELEVATION AT GRID A
1 : 50

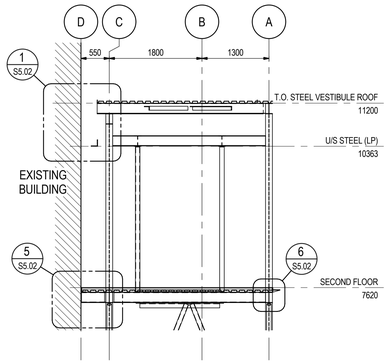

7 S3.01 VESTIBULE SECTION
1 : 50

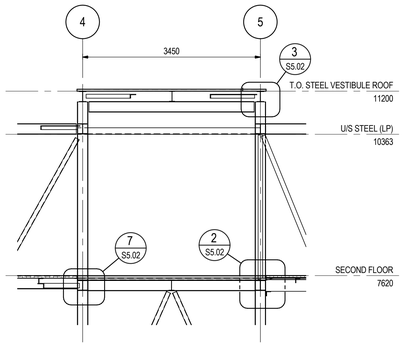

8 S3.01 VESTIBULE SECTION
1 : 50

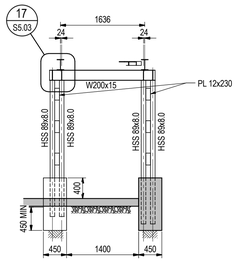

10 S3.01 SECTION AT STAIR ENTRY
1 : 50

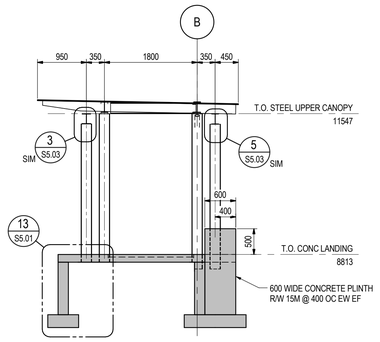

9 S3.01 UPPER CANOPY SECTION
1 : 50

numberTEN architectural group

wsp

JOB No.: 171-16182-00

PROFESSIONAL ENGINEER — J. W. GALLOWAY — BRITISH COLUMBIA

2018-08-07

Revision	Description/Description	Date/Date
D	RE-ISSUED FOR TENDER	2018-02-02
C	ISSUE FOR TENDER	2018-01-08
B	100% SUBMISSION	2017-12-22
A	95% REVIEW SUBMISSION	2017-12-05

Client/client

FISHERIES AND OCEANS, REAL PROPERTY, SAFETY AND SECURITY

VANCOUVER, BC
200-401 BURRARD ST.

Project title/Titre du projet

DFO HANGAR BUILDING WALKWAY AND ENTRY VESTIBULE

Consultant Signature Box Only

Designed by/Concept par: **DJ/JWG**
Approved by/Approuvée par: **JWG**

Drawn by/Dessine par: **GM**

PWGSC Project Manager/Administrateur de Projets TPSGC: --

PWGSC, Regional Manager, Architectural and Engineering Services/ Gestionnaire régionale, Services d'architectural et de génie, TPSGC: --

Drawing title/Titre du dessin

FRAMING ELEVATIONS

Project No./No. du projet	Sheet/ Feuille	Revision no./ Le Révision no.
R.000000.000	S3.01	D

8/7/2018 12:47:27 PM

PWGSC – B1 – 1000x707

DM5XXXXXX

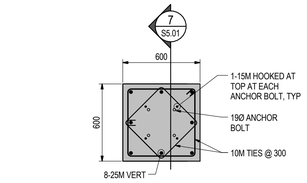

2 S5.01 TYPICAL PIER REINFORCING
1 : 20

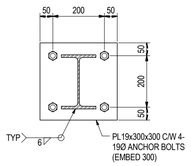

5 S5.01 TYPICAL COLUMN BASE PLATE
1 : 10

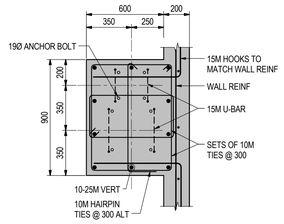

3 S5.01 PIER REINF AT LANDING
1 : 20

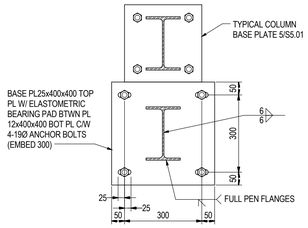

6 S5.01 BASE PLATE AT CONCRETE LANDING
1 : 10

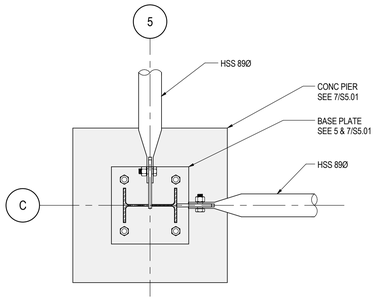

15 S5.01 CONNECTION DETAIL
1 : 10

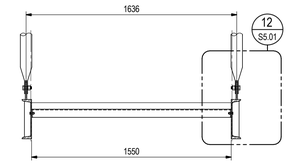

14 S5.01 STAIR SECTION AT STRINGER
1 : 20

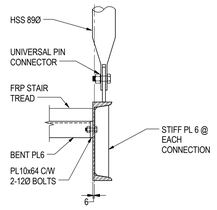

12 S5.01 STAIR DETAIL AT STRINGER
1 : 10

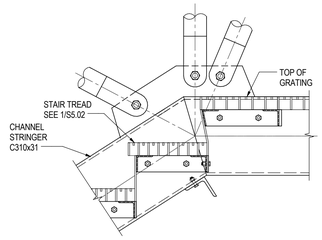

10 S5.01 STAIR CONNECTION
1 : 10

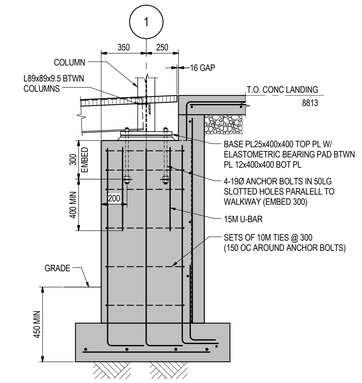

4 S5.01 SECTION AT CONCRETE LANDING
1 : 20

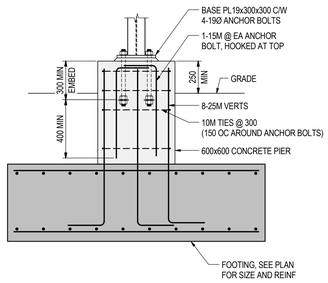

7 S5.01 TYPICAL PIER SECTION
1 : 20

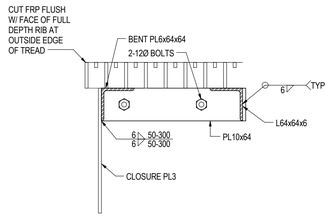

1 S5.01 TYPICAL STAIR TREAD
1 : 5

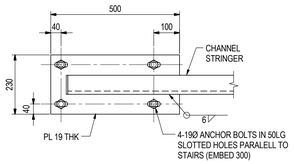

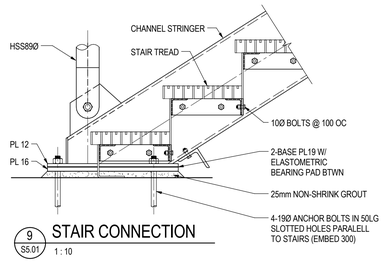

9 S5.01 STAIR CONNECTION
1 : 10

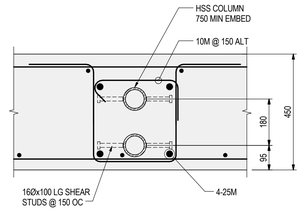

11 S5.01 DETAIL
1 : 10

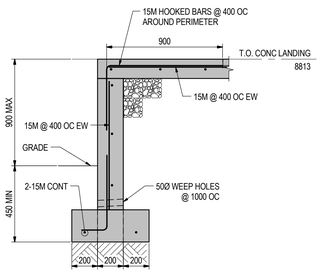

13 S5.01 TYPICAL 200 WIDE WALL
1 : 20

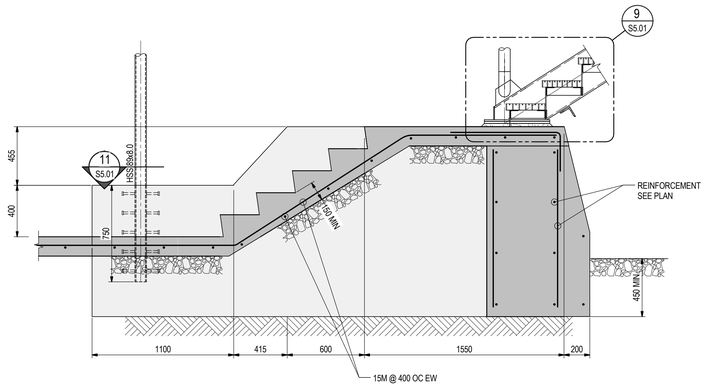

8 S2.01 CONCRETE STAIR SECTION
1 : 20

numberTEN architectural group number 10

wsp

JOB No.: 171-16182-00

PROFESSIONAL ENGINEER — PROVINCE OF BRITISH COLUMBIA — J. W. GALLOWAY — 2018-08-07

Revision	Description/Description	Date/Date
D	RE-ISSUED FOR TENDER	2018-02-02
C	ISSUE FOR TENDER	2018-01-08
B	100% SUBMISSION	2017-12-22
A	95% REVIEW SUBMISSION	2017-12-05

Client/client

FISHERIES AND OCEANS, REAL PROPERTY, SAFETY AND SECURITY

VANCOUVER, BC
200-401 BURRARD ST.

Project title/Titre du projet

DFO HANGAR BUILDING WALKWAY AND ENTRY VESTIBULE

Consultant Signature Box Only

Designed by/Concept par	Approved by/Approuvée par
DJ/JWG	JWG

Drawn by/Dessine par: GM

PWGSC Project Manager/Administrateur de Projets TPSGC: --

PWGSC, Regional Manager, Architectural and Engineering Services/ Gestionnaire régionale, Services d'architectural et de génie, TPSGC: --

Drawing title/Titre du dessin

FOUNDATION AND STAIR DETAILS

Project No./No. du projet	Sheet/ Feuille	Revision no./ Le Révision no.
R.000000.000	S5.01	D

8/7/2018 12:47:28 PM

PWGSC – B1 – 1000x707

DM5XXXXXX

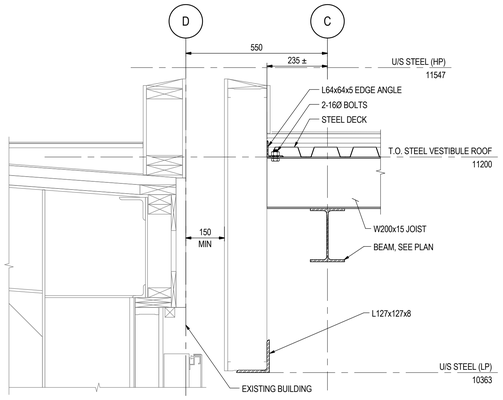

1 S5.02 EXISTING AT ROOF
1 : 10

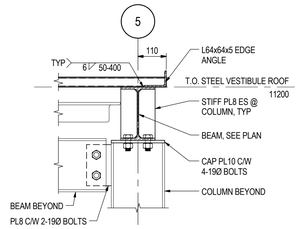

3 S5.02 VESTIBULE ROOF SECTION
1 : 10

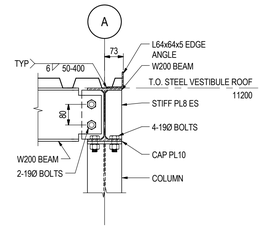

8 S5.02 TYPICAL BEAM OVER COLUMN CONNECTION
1 : 10

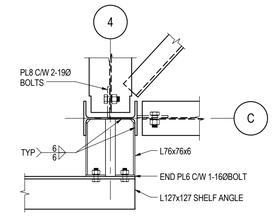

4 S5.02 SHELF ANGLE CONNECTION
1 : 10

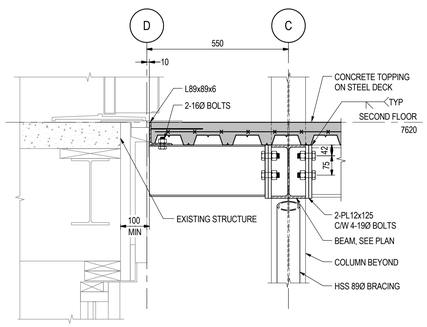

5 S5.02 EXISTING AT FLOOR
1 : 10

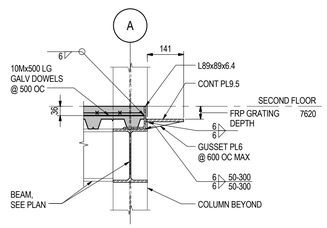

6 S5.02 TYPICAL CURTAIN WALL SUPPORT AT BOTTOM
1 : 10

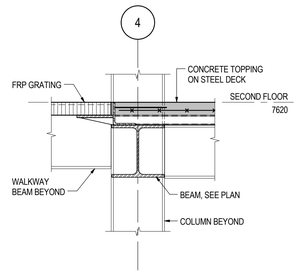

7 S5.02 VESTIBULE TO WALKWAY TRANSITION
1 : 10

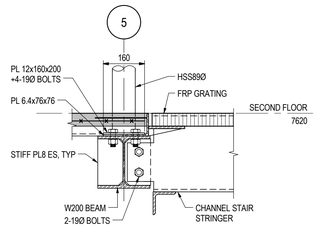

2 S5.02 VESTIBULE TO STAIR TRANSITION
1 : 10

numberTEN architectural group

wsp

JOB No.: 171-16182-00

PROFESSIONAL ENGINEER — PROVINCE OF BRITISH COLUMBIA — J. W. GALLOWAY — 2018-08-07

Revision	Description/Description	Date/Date
D	RE-ISSUED FOR TENDER	2018-02-02
C	ISSUE FOR TENDER	2018-01-08
B	100% SUBMISSION	2017-12-22
A	95% REVIEW SUBMISSION	2017-12-05

Client/client

FISHERIES AND OCEANS, REAL PROPERTY, SAFETY AND SECURITY

VANCOUVER, BC
200-401 BURRARD ST.

Project title/Titre du projet

DFO HANGAR BUILDING WALKWAY AND ENTRY VESTIBULE

Consultant Signature Box Only

Designed by/Concept par: **DJ/JWG**

Approved by/Approuvée par: **JWG**

Drawn by/Dessine par: **GM**

PWGSC Project Manager/Administrateur de Projets TPSGC: --

PWGSC, Regional Manager, Architectural and Engineering Services/ Gestionnaire régionale, Services d'architectural et de génie, TPSGC: --

Drawing title/Titre du dessin

VESTIBULE SECTIONS AND DETAILS

Project No./No. du projet	Sheet/ Feuille	Revision no./ La Révision no.
R.000000.000	S5.02	D

8/7/2018 12:47:29 PM

PWGSC – R1 – 1000x707

DM5XXXXXX

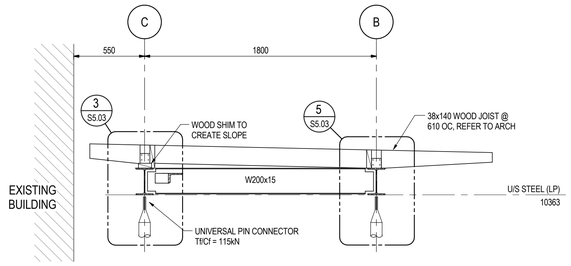

1 S5.03 TYPICAL WALKWAY SECTION
1 : 20

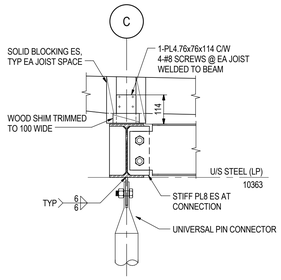

3 S5.03 WOOD JOIST CONNECTION
1 : 10

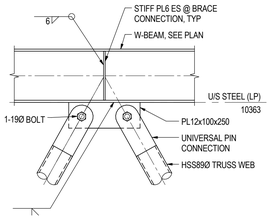

4 S5.03 TYPICAL TRUSS WEB CONNECTION
1 : 10

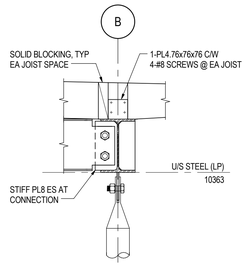

5 S5.03 WOOD JOIST CONNECTION
1 : 10

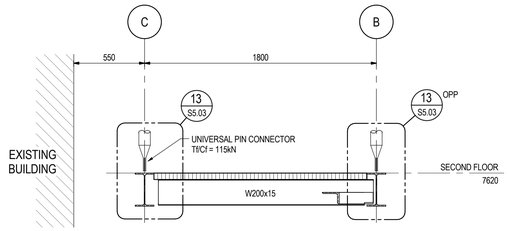

2 S5.03 TYPICAL WALKWAY SECTION
1 : 20

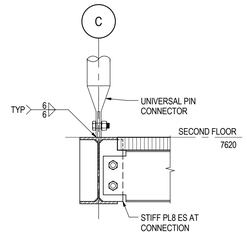

13 S5.03 CONNECTION DETAIL
1 : 10

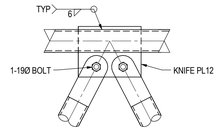

6 S5.03 BRACE CONNECTION
1 : 10

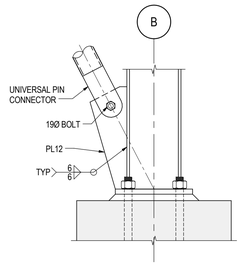

14 S5.03 BRACE AT BASE PLATE
1 : 10

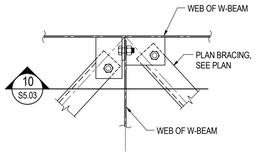

7 S5.03 PLAN DETAIL AT FLOOR BRACING
1 : 10

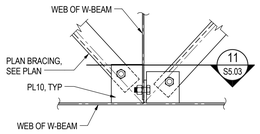

8 S5.03 PLAN DETAIL AT ROOF PLAN BRACING
1 : 10

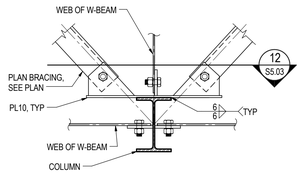

9 S5.03 PLAN BRACING AT COLUMN
1 : 10

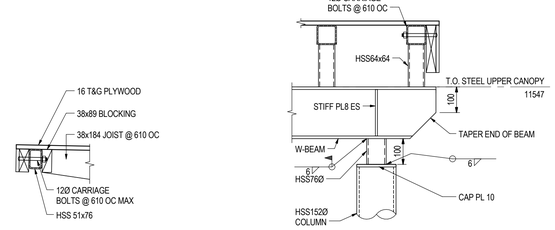

18 S5.03 SECTION AT UPPER CANOPY
1 : 10

15 S5.03 SECTION
1 : 10

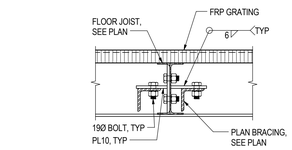

10 S5.03 PLAN BRACING CONNECTION AT FLOOR
1 : 10

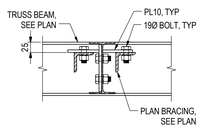

11 S5.03 PLAN BRACING CONNECTION AT ROOF
1 : 10

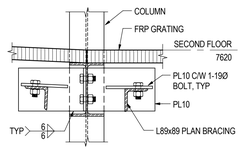

12 S5.03 PLAN BRACING CONNECTION AT COLUMN
1 : 10

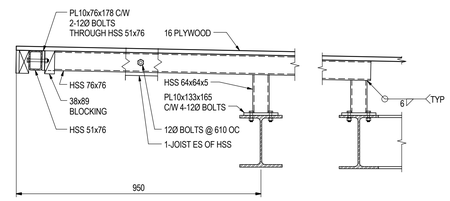

16 S5.03 SECTION AT UPPER CANOPY
1 : 10

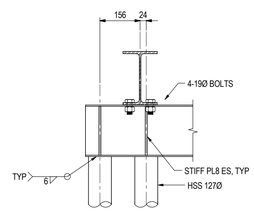

17 S5.03 CONNECTION DETAIL
1 : 10

numberTEN architectural group number 10

wsp

JOB No.: 171-16182-00

PROFESSIONAL ENGINEER J. W. GALLOWAY BRITISH COLUMBIA

2018-08-07

Revision	Description/Description	Date/Date
D	RE-ISSUED FOR TENDER	2018-02-02
C	ISSUE FOR TENDER	2018-01-08
B	100% SUBMISSION	2017-12-22
A	95% REVIEW SUBMISSION	2017-12-05

Client/client

FISHERIES AND OCEANS, REAL PROPERTY, SAFETY AND SECURITY

VANCOUVER, BC
200-401 BURRARD ST.

Project title/Titre du projet

DFO HANGAR BUILDING WALKWAY AND ENTRY VESTIBULE

Consultant Signature Box Only

Designed by/Concept par: **DJ/JWG**
Approved by/Approuvée par: **JWG**
Drawn by/Dessine par: **GM**
PWGSC Project Manager/Administrateur de Projets TPSGC: --
PWGSC, Regional Manager, Architectural and Engineering Services/ Gestionnaire régionale, Services d'architectural et de génie, TPSGC: --

Drawing title/Titre du dessin

STEEL SECTION AND DETAILS

Project No./No. du projet	Sheet/ Feuille	Revision no./ Lo Révision no.
R.000000.000	S5.03	D

DM5XXXXXX

8/7/2018 12:47:29 PM

PWGSC – B1 – 1000x707