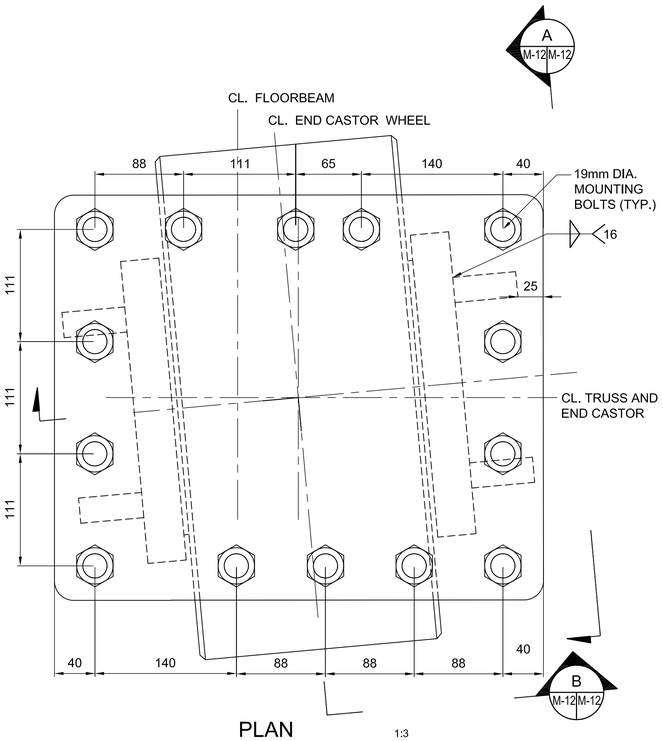

PLAN 1:3

NORTH EAST END CASTOR ASSEMBLY
(2) REQUIRED

NORTHEAST ASSEMBLY - SHOWN
SOUTHEAST ASSEMBLY - OPPOSITE HAND

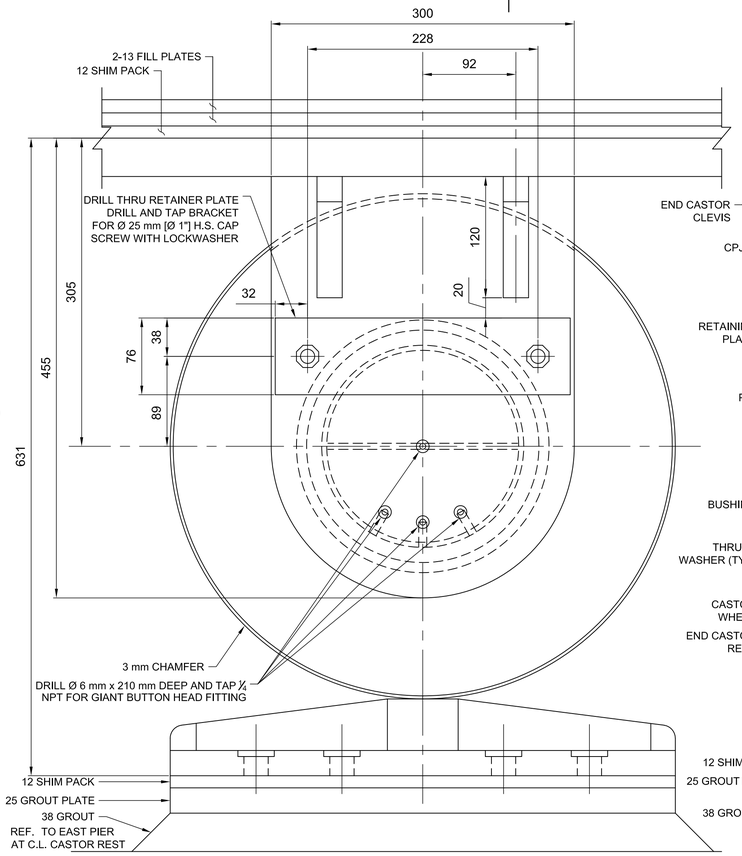

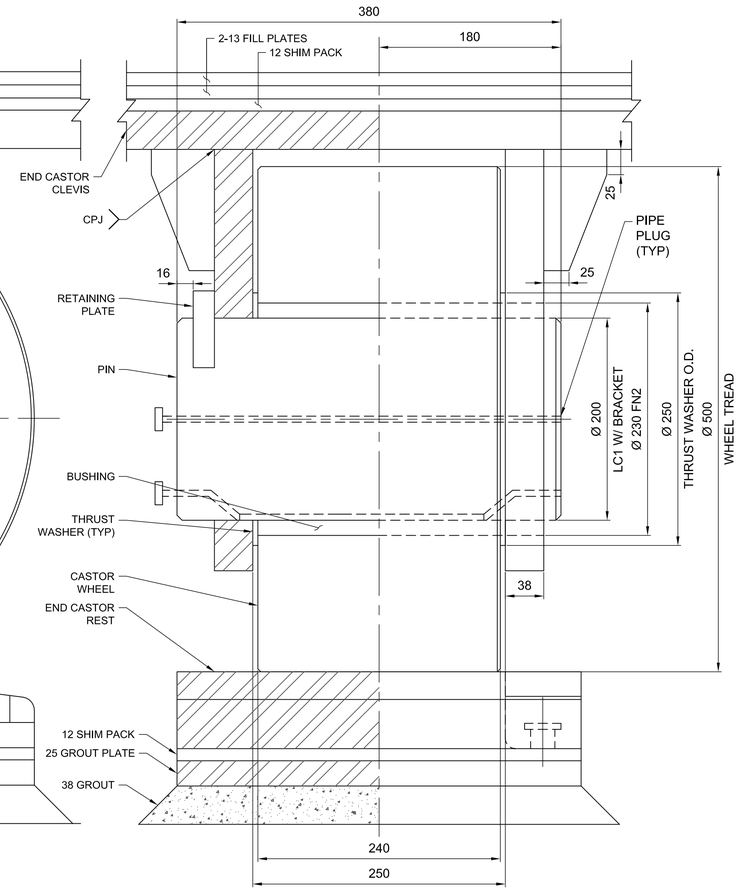

A M-12 M-12 VIEW 1:3

NE END CASTOR ASSEMBLY SE SIMILAR EXCEPT 2 FILL PLATES BELOW REST NO FILL PLATES ABOVE CLEVIS

B M-12 M-12 VIEW 1:3

NE END CASTOR ASSEMBLY SE SIMILAR EXCEPT 2 FILL PLATES BELOW REST NO FILL PLATES ABOVE CLEVIS

MATERIAL: BRACKET - ASTM A709/ A709M GR 50
RETAINING PLATE - ASTM A36/ A36M
PIN - ASTM A668/ A668M CL L
THRUST WASHER - ASTM B22/ B22M, ALLOY 911
CASTOR WHEEL - ASTM A668/ A668M CL K

NOTES:

(1) SEE DRAWING M-01 AND M-02 FOR GENERAL NOTES, FITS AND FINISHES APPLICABLE.

(2) PROVIDE STAINLESS STEEL, TYPE 316, ANCHOR BOLTS AS SHOWN. ALL ANCHOR BOLTS CONNECTING END CASTOR REST TO MASONRY SHALL MEET THE GENERAL REQUIREMENTS PER DRAWING M-01.

(3) ADJUST FILL PLATE SHIMS AT EACH END CASTOR ASSEMBLY TO ACHIEVE PROPER ROADWAY ALIGNMENT. OFFSET ELEVATION OF END CASTOR ASSEMBLIES TO PROMOTE ADDITIONAL CLEARANCE OF SOUTH CASTOR WHEEL AS IT TRAVELS OVER NORTH CASTOR REST. CASTORS SHALL BE IN CONTACT WITH REST WHEN END LIFTS ARE DRIVEN (RAISED).

(4) PROVIDE RC6 FIT BETWEEN END CASTOR PIN AND BUSHING AFTER THE BUSHING HAS BEEN INSTALLED IN THE CASTOR WHEEL.

(5) INSTALLATION AND ALIGNMENT TO BE COORDINATED WITH THE REST PIER (SOUTH ABUTMENT) REHABILITATION WORK, AND THE FINAL ELEVATION OF THE NEW SWING SPAN.

(6) THE END CASTORS LOCATED AT THE EAST END OF THE SWING SPAN SHALL ROLL INTO POSITION UNDER MINIMAL LOAD IF THE SWING SPAN IS TILTED TO THE EAST AND ARE STATIC WHEN THE DEAD LOAD REACTION FORCE IS APPLIED BY THE END LIFT SYSTEM (LOCATED AT THE WEST END OF THE SWING SPAN). CASTORS ARE ALSO STATIC UNDER NORMAL LIVE LOAD REACTION FORCES. IF THE SWING SPAN IS TILTED TO THE WEST THE EAST END CASTORS SHOULD NOT NEED TO ROLL AS THERE SHOULD BE CLEARANCE BETWEEN THE CASTORS AND THE RESTS.

(7) THE END FACES OF ALL WHEELS, ROLLERS AND CASTORS SHALL BE PAINTED. THE TREADS, THRUST FACES, AND SURFACES IN FIXED, SLIDING OR ROLLING CONTACT SHALL NOT BE PAINTED.

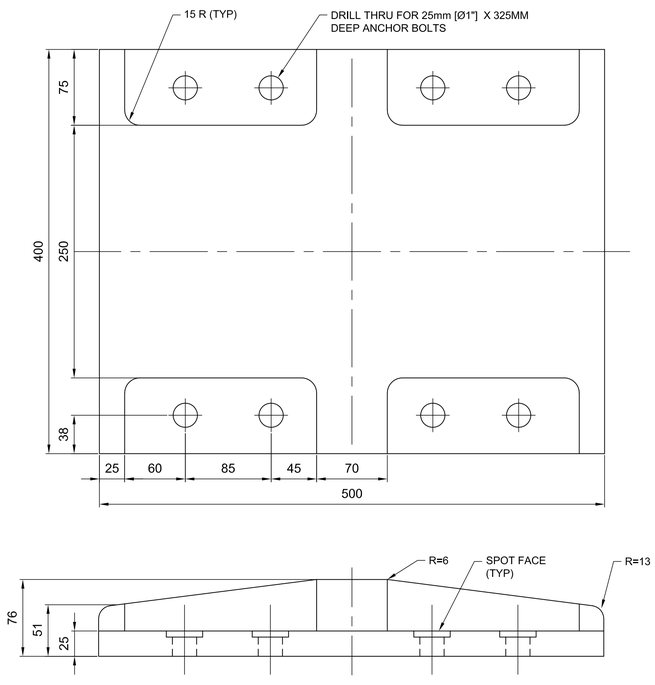

DETAIL 1:3

END CASTOR REST
MATERIAL: ASTM A668/A668M CL K

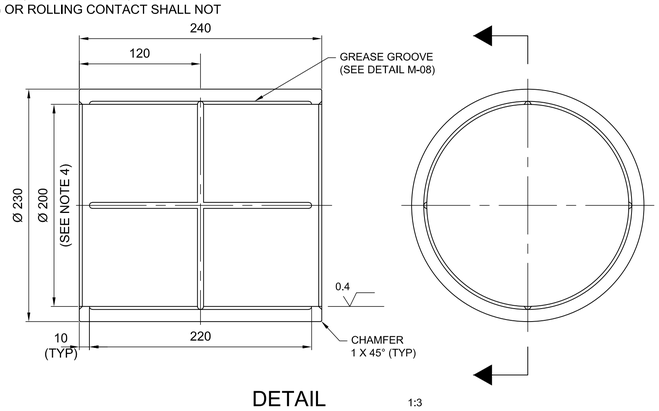

DETAIL 1:3

END CASTOR BUSHING
MATERIAL: ASTM B22/ B22M ALLOY 911
(1.6 MICROMETER FINISH
UNLESS OTHERWISE NOTED.)

Public Works and Government Services Canada
Travaux publics et Services gouvernementaux Canada

PARSONS

LICENSED PROFESSIONAL ENGINEER J. D. KEYT 100215529 PROVINCE OF ONTARIO

revision		date
04		
03		
02		
01	ISSUED FOR TENDER	2018-07-20

Do not scale drawings.
Verify all dimensions and conditions on site and immediately notify the Departmental Representative of all discrepancies.

A B C
A Detail No. / No. du détail
B drawing no. – where detail required / dessin no. – où détail exigé
C drawing no. – where detailed / dessin no. – où détaillé

project title / titre du projet: Ontario
HAMLET BRIDGES
(BRIDGE 57 & 58)
SWING AND FIXED BRIDGES

drawing title / titre du dessin: END CASTORS AND REST PLATES

drawn by / dessine par: THOMAS NIEDZWIADEK
designed by / conc par: JEFF KEYT
approved by / approuve par: JEFF KEYT
bid / offre: JULIO LEON
project manager / administrateur de projets
project date / date du projet: 2018-07-20
project no. / no. du projet: R.073593.001
drawing no. / dessine no.: M-12

REVISED BY: AKL
\\vccon52fs01\Projects\TOR\476122 Hamlet\BT\Drawings\Mechanical Engineering Final Design Drawings (Begins March 23 2018)\M-12.dwg
Aug 10, 2018 – 1:32pm

GSC-A1 DATE PLOTTED: YYYY-MM-DD PLOT SCALE: 1:? CAD FILE: