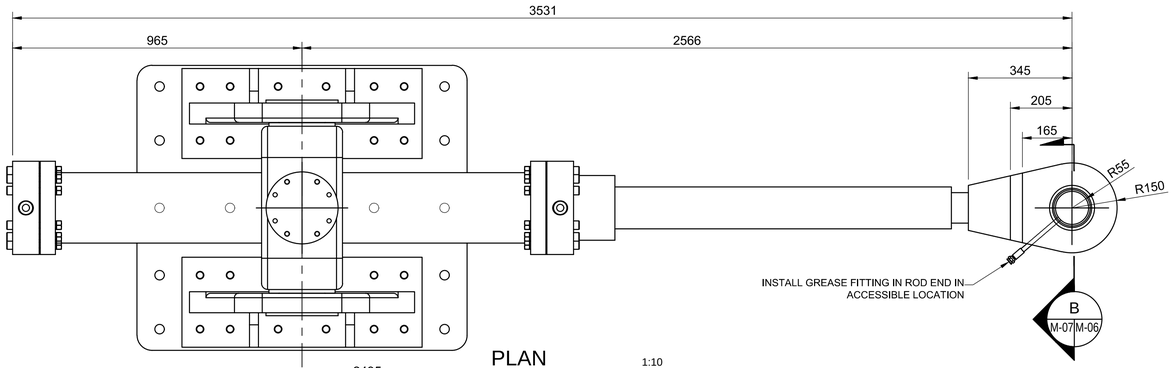

PLAN 1:10

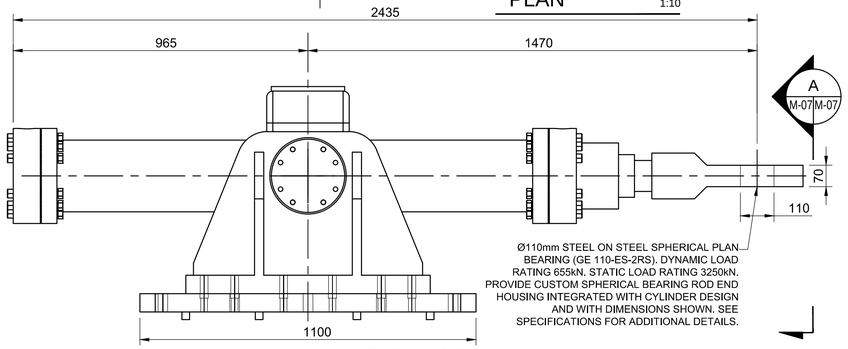

ELEVATION 1:10

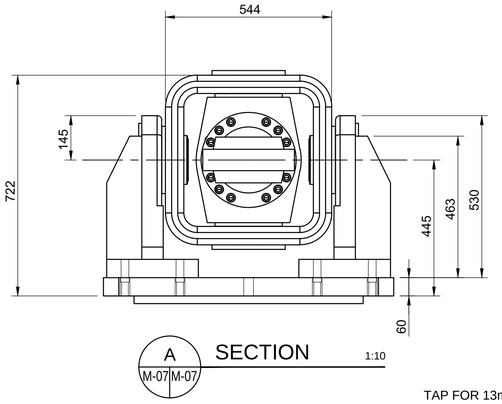

SECTION 1:10

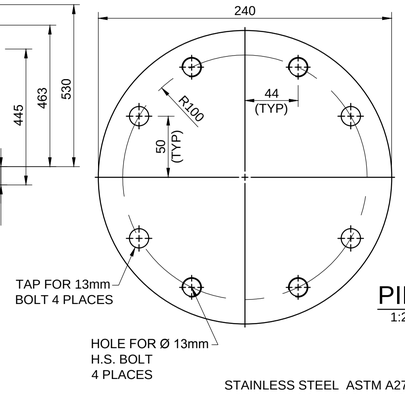

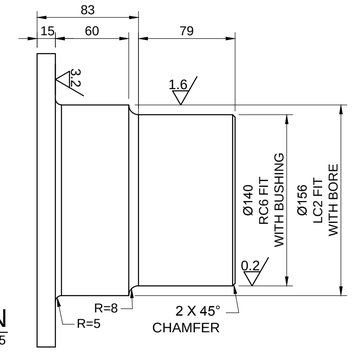

PIN 1:2.5

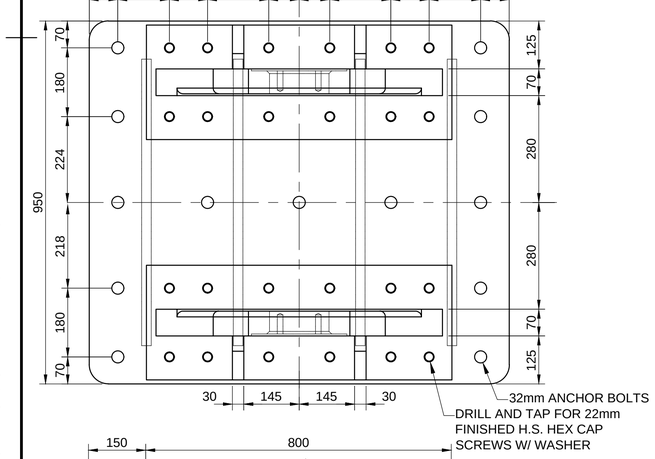

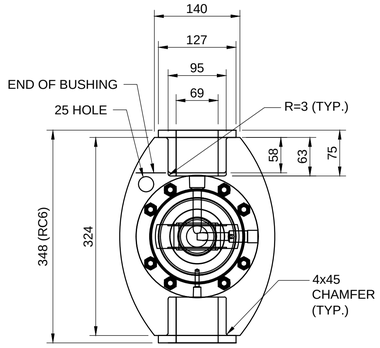

DETAIL 1:5

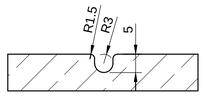

GREASE GROOVE DETAIL 1:1

STAINLESS STEEL ASTM A276/A276M TYPE 431 CONDITION A
PROVIDE 3.2 MICRON FINISH UNLESS OTHERWISE NOTED

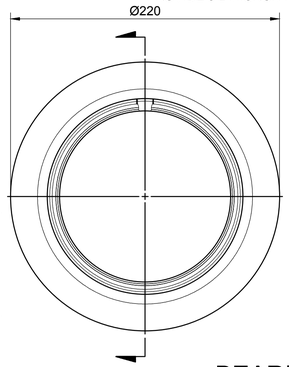

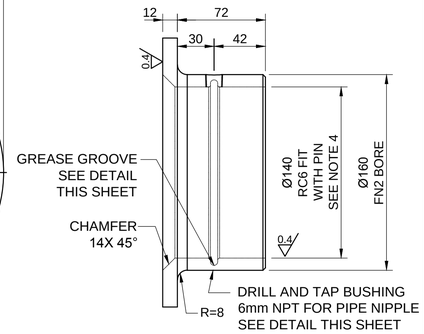

BEARING BUSHING 1:2.5

NICKEL ALUMINUM BRONZE ASTM B148
C95500 SELF LUBRICATING WITH TREEPANNED LUBRICANT INSERTS COMPATIBLE WITH GREASE.
PROVIDE 3.2 MICRON FINISH UNLESS OTHERWISE NOTED

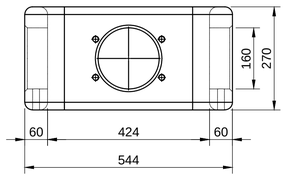

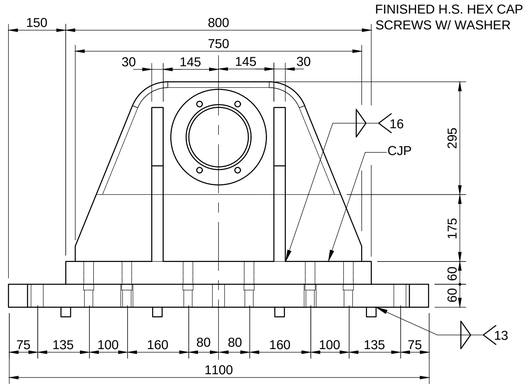

BEARING SUPORT 1:8

ASTM A709/A709M GR

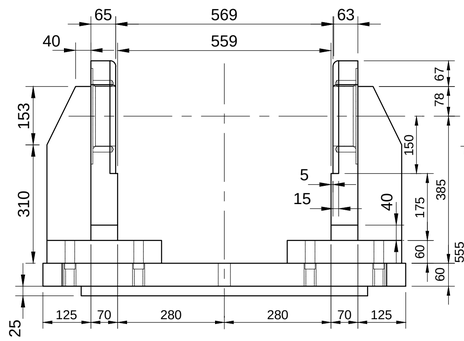

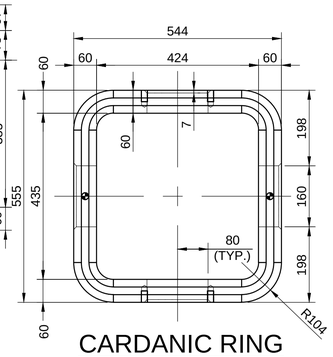

CARDANIC RING 1:8

ASTM A709/A709M GR

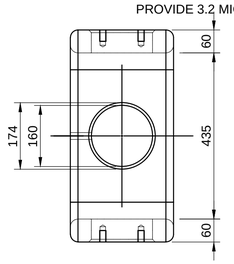

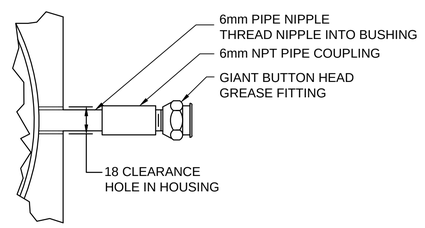

GREASE FITTING DETAIL 1:2

NOTES:

1. SEE GENERAL NOTES ON SHEET M-01 AND M-02.
2. CARDANIC RING ASSEMBLY, CONSISTING OF ALL PINS, BUSHINGS, CARDANIC RING, CYLINDER AND BEARING SUPPORT SHALL BE ASSEMBLED IN ITS ENTIRETY IN THE SHOP.
3. INSTALL BEARING FRAMES SUCH THAT GREASE FITTINGS ARE ORIENTED TOWARDS THE ROD END OF THE CYLINDER.
4. ALL BEARING AND PIN BORES SHALL BE LINE BORED. BUSHING BORES SHALL BE LINE BORED AFTER ASSEMBLY INTO CARDANIC RING.
5. MACHINE BEARING SUPPORT BASE SURFACE TO WITHIN 14MM OF THE GROUT LUGS TO ACHIEVE THE SPECIFIED FINISH.
6. ADJUST BUSHING FLANGE THICKNESS TO ACHIEVE SPECIFIED RC6 THRUST CLEARANCE.
7. ADJUST BEARING SUPPORT AT INSTALLATION TO ENSURE CYLINDER IS HORIZONTAL.
8. ALL WELDS SHALL BE COMPLETE JOINT PENETRATION WELDS UNLESS OTHERWISE NOTED. ALL MACHINING WORK TO BE PERFORMED FOLLOWING WELDING AND STRESS RELEIVING.
9. BREAK ALL SHARP EDGES.
10. MACHINE BEARING SUPPORT BASE SURFACE TO WITHIN 14MM OF THE GROUT LUGS TO ACHIEVE THE SPECIFIED FINISH.
11. ALL DIMENSIONS ARE FINAL DIMENSIONS. ADD STOCK AS REQUIRED TO ALLOW CLEAN UP FOR MACHINING.

Public Works and Government Services Canada
Travaux publics et Services gouvernementaux Canada

PARSONS

LICENSED PROFESSIONAL ENGINEER J.D. KEYT 100215529 PROVINCE OF ONTARIO

revision		date
04		
03		
02		
01	ISSUED FOR TENDER	2018-07-20

Do not scale drawings.
Verify all dimensions and conditions on site and immediately notify the Departmental Representative of all discrepancies.

A Detail No. No. du détail
B drawing no. – where detail required dessin no. – où détail exigé
C drawing no. – where detailed dessin no. – où détaillé

project title / titre du projet: Ontario
HAMLET BRIDGES (BRIDGE 57 & 58)
SWING AND FIXED BRIDGES

drawing title / titre du dessin: CYLINDER TRUNNIONS AND ROD END CONNECTIONS – 2 OF 2

drawn by / dessine par: GREG TAYLOR
designed by / conc par: JEFF KEYT
approved by / approuve par: JEFF KEYT
bid / offre: JULIO LEON
project manager / administrateur de projets
project date / date du projet: 2018-07-20
project no. / no. du projet: R.073593.001
drawing no. / dessine no.: M-07

J:\TOR\476122 Hamlet\BT\Drawings\Mechanical Engineering Final Design Drawings (Begins March 23 2018)\M-07.dwg
Jul 21, 2018 – 11:45pm
REVISED BY: AKL

GSC-A1 DATE PLOTTED: YYYY-MM-DD PLOT SCALE: 1:? CAD FILE: