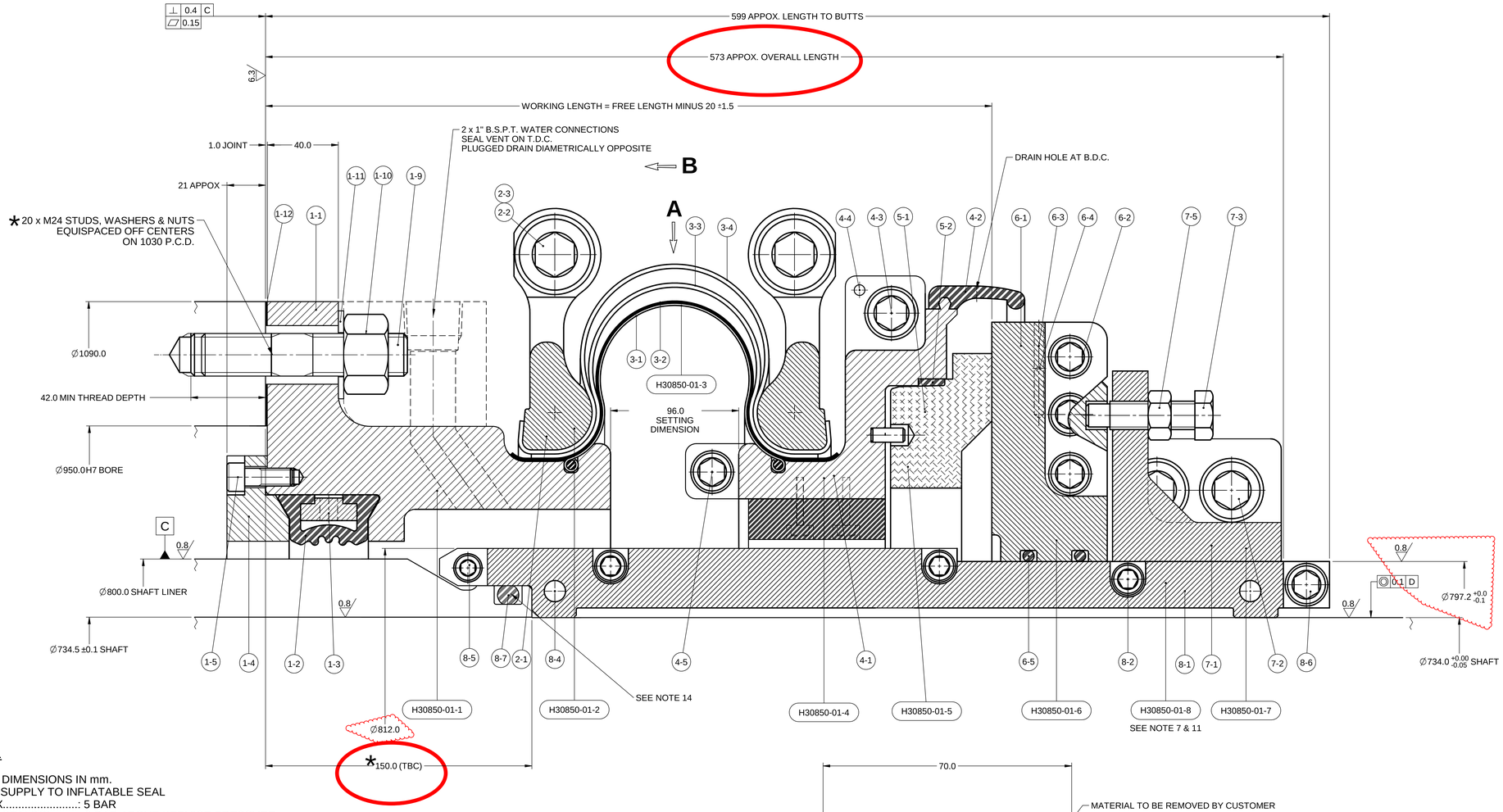

DRAWING POSn	DESCRIPTION	MATERIAL	QTY
H30850-01 -1	MOUNTING RING (SPLIT) ASSY		1
-1-1	MOUNTING RING (SPLIT)	ALUMINIUM BRONZE	1
-1-2	INFLATABLE SEAL	CHLOROPRENE (NEOPRENE)	1
-1-3	SUPPORT RING	PHOSPHOR BRONZE	1
-1-4	ADAPTOR RING	ALUMINIUM BRONZE	1
-1-5	SCREW	NICKEL ALUMINIUM BRONZE	24
-1-6	SCREW	NICKEL ALUMINIUM BRONZE	6
-1-7	DOWEL	NICKEL ALUMINIUM BRONZE	2
-1-8	SCREW	NICKEL ALUMINIUM BRONZE	4
-1-9	STUD	NICKEL ALUMINIUM BRONZE	20
-1-10	NUT	NICKEL ALUMINIUM BRONZE	20
-1-11	WASHER	NICKEL ALUMINIUM BRONZE	20
-1-12	JOINT	COMPOSITE	1
H30850-01 -2	MAIN CLAMP RING ASSY		1
-2-1	MAIN CLAMP RING	ALUMINIUM BRONZE	2
-2-2	SCREW	NICKEL ALUMINIUM BRONZE	8
-2-3	NUT	NICKEL ALUMINIUM BRONZE	8
H30850-01 -3	BELLOWS ASSY		1
-3-1	SUPPORT SPRING	MONEL	1
-3-2	INTERLAYER	COMPOSITE	1
-3-3	BRIDGING SPRING	MONEL	1
-3-4	BACKING SPRING	MONEL	1
H30850-01 -4	CARRIER (SPLIT) ASSY		1
-4-1	CARRIER (SPLIT)	ALUMINIUM BRONZE	1
-4-2	GUARD	CHLOROPRENE (NEOPRENE)	1
-4-3	SCREW	NICKEL ALUMINIUM BRONZE	2
-4-4	DOWEL	NICKEL ALUMINIUM BRONZE	2
-4-5	SCREW	NICKEL ALUMINIUM BRONZE	2
H30850-01 -5	FACE (SPLIT) ASSY		1
-5-1	FACE (SPLIT)	COMPOSITE	1
-5-2	SEALING STRIP	CHLOROPRENE (NEOPRENE)	1
H30850-01 -6	SEAT (SPLIT) ASSY		1
-6-1	SEAT (SPLIT)	PHOSPHOR BRONZE	1
-6-2	SCREW	NICKEL ALUMINIUM BRONZE	6
-6-3	SEAT DOWEL	NICKEL ALUMINIUM BRONZE	2
-6-4	SPRING PIN	CARBON STEEL	2
-6-5	O CORD	CHLOROPRENE (NEOPRENE)	2
H30850-01 -7	DRIVE CLAMP RING ASSY		1
-7-1	DRIVE CLAMP RING	ALUMINIUM BRONZE	1
-7-2	SCREW	NICKEL ALUMINIUM BRONZE	4
-7-3	DRIVE SCREW	NICKEL ALUMINIUM BRONZE	4
-7-4	SCREW	NICKEL ALUMINIUM BRONZE	6
-7-5	NUT	NICKEL ALUMINIUM BRONZE	10
-7-6	SCREW	NICKEL ALUMINIUM BRONZE	4
H30850-01 -8	LINER (SPLIT) ASSY		1
-8-1	LINER (SPLIT)	ALUMINIUM BRONZE	1
-8-2	SCREW	NICKEL ALUMINIUM BRONZE	6
-8-3	SCREW	NICKEL ALUMINIUM BRONZE	8
-8-4	DOWEL	PHOSPHOR BRONZE	4
-8-5	SCREW	NICKEL ALUMINIUM BRONZE	2
-8-6	SCREW	NICKEL ALUMINIUM BRONZE	2
-8-7	O CORD	CHLOROPRENE (NEOPRENE)	1
H30850-01 -9	SERVICE KIT A	SPARES ONLY (SEE NOTE 9)	
H30850-01 -10	SERVICE KIT B	SPARES ONLY (SEE NOTE 9)	
H30850-01 -11	SERVICE KIT C	SPARES ONLY (SEE NOTE 9)	
H30850-01 -CT	COMPRESSION TOOL ASSY		1
-CT-1	COMPRESSION TOOL	MILD STEEL	8
-CT-2	STUDDING	MILD STEEL	4
-CT-3	NUT	ALLOY STEEL	16
-CT-4	WASHER	STEEL	16

NOTES.

1. ALL DIMENSIONS IN mm.
2. AIR SUPPLY TO INFLATABLE SEAL
   MAX.....: 5 BAR
   MIN SEALING.....: 2 BAR ABOVE SERVICE PRESSURE.
3. VENT INFLATABLE SEAL TO ATMOSPHERE WHEN NOT IN USE.
4. ITEM 1-2 MUST BE HOT BONDED AROUND THE SHAFT AT INSTALLATION AND OVERHAUL.
5. ITEMS 1-5, 1-6, 4-3, 4-5, 6-2, 7-2, 8-2, 8-5 & 8-6 TO BE SECURED USING LIQUID THREADLOCKER ON INSTALLATION.
6. FOR FACTORY TEST/ASSEMBLY CRITERIA SEE T.D.S. 16/011.
7. SHAFT LINER WILL REQUIRE MACHINING TO ACCOMODATE SPLIT LINER.
   SHAFT Ø ACHIEVED WILL THEN BE USED TO ESTABLISH THE BORE OF SPLIT LINER. SEE NOTE 11.
8. ITEM 1-1 MUST BE CENTRALISED AROUND THE SHAFT LINER AND DRILLED AND DOWELLED ON INSTALLATION.
9. OVERHAUL TYPES LISTED BELOW ARE BASED ON LEVEL OF MAINTENANCE REQUIRED:
   MINOR OVERHAUL — ORDER SERVICE KIT A (CONSISTS OF FACE (SPLIT) ASSEMBLY, INFLATABLE SEAL, ADAPTOR RING SCREWS, DRIVE CLAMP RING BUTT SCREWS, DRIVE CLAMP RETENTION SCREW, SPLASH GUARD, SEAT O CORDS, JOINT AND COMPRESSION TOOLING ASSEMBLY)

   MAJOR OVERHAUL — ORDER SERVICE KITS A & B (CONSISTS OF BELLOWS ASSEMBLY, MAIN CLAMP RING FASTENERS, SEAT DRIVE SCREWS AND SEAT ALIGNMENT SCREWS AND NUTS, LINER O CORD AND BUTT SCREWS)

   COMPLETE OVERHAUL — ORDER SERVICE KITS A, B & C (CONSISTS OF SEAT (SPLIT) ASSEMBLY)
10. HOLES FOR ITEM 7-6 TO BE DRILLED IN-SITU INTO ITEM 8-1 ON INSTALLATION.
11. BORE OF LINER (ITEM 8-1) SUPPLIED UNDERSIZE. ONCE SHAFT AND LINER STEP HAVE BEEN MACHINED AND DIMENSIONS CONFIRMED, CUSTOMER TO MACHINE LINER TO T.D.S. 06/030.
12. HOLES FOR ITEM 8-3 TO BE DRILLED IN-SITU ON INSTALLATION AFTER COMPLETION OF SHAFT/SPLIT LINER MACHINING.
13. DIMENSIONS MARKED * ARE ESTIMATED FROM SHIPS DRAWINGS A109716 / 7.088.426 - A , A006700 / 1000421 - A - CUSTOMER TO CONFIRM.
14. CUSTOMER TO MACHINE EXISTING SHAFT LINER 'O' CORD GR0OVE TO SUIT WUK SUPPLY O-CORD.

DRG POSn	THREAD METRIC	TORQUE (Nm)
1-5	M10	24
8-5	M10	18
2-2	M30	275
4-3	M20	176
1-6, 4-5 6-2, 8-6	M16	96
1-9, 7-2	M24	347.5
1-8, 8-2	M12	41

SEAL PARAMETERS.

FITTING COMPRESSION.....: 20.0
MAX. OPERATING COMPRESSION.....: 37.5
MIN. OPERATING COMPRESSION.....: 9.0

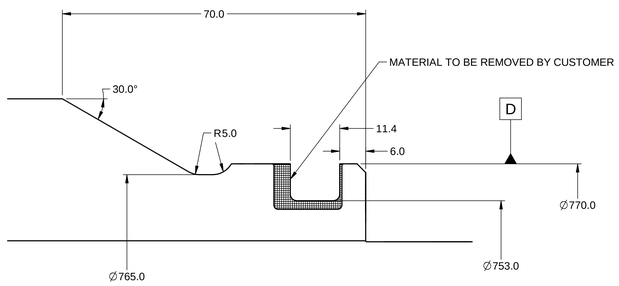

CURRENT LINER DIMENSIONS

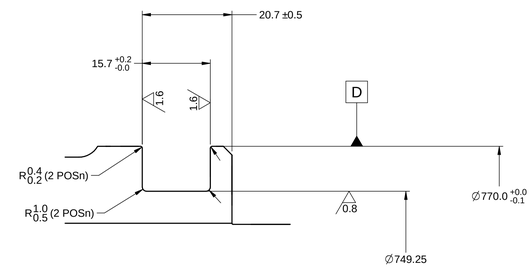

CUSTOMER TO M/C EXISTING O-CORD
GROOVE TO SUIT WUK STANDARD GROOVE
FOR Ø12mm O-CORD
SEE NOTE 14

INSTALLATION

CLASSIFICATION: LR	1ST ANGLE:	ACCESS CODE: 4	OWNER: CCG	YARD: -	CUSTOMER: WCA
FLUIDS: INTERNAL WATER; EXTERNAL AIR	WÄRTSILÄ		VESSEL NAME: CCGS TERRY FOX	USED ON: ICEBREAKER	REF/FUNC. LOC.: 100015596
			DRAWN BY: W. CROOK	CHECKED BY: J. BURT	MAX. MASS: -
			DRAWN DATE: 2 MAR 2015	DATE REVISED: 5 OCT 2015	SHEET: 1 OF 2
SEAL CODE/BASED ON: 41615/910/41/1013/38/75/41863 FL = 429 ± 3.3					
TITLE: GA OF 840 MOD 800 TYPE MA SEAL					
SIZE: A0	DRAWING NUMBER: H30850-01				REV: C

PRESSURES, BAR:	MIN	NOM	MAX
INTERNAL	-	-	1
EXTERNAL	-	-	-
DIFFERENTIAL	-	-	-

SHAFT MOVEMENTS:	MIN	NOM	MAX
AXIAL INBOARD, mm	N/A	-	2.5
AXIAL OUTBOARD, mm	N/A	-	8.5
RADIAL, mm	N/A	-	10
ANGULAR, °	N/A	-	-
SHAFT SPEED, RPM	-	120	-

TEMPERATURE,°C:	MIN	NOM	MAX
INTERNAL	-5	-	40
EXTERNAL	-5	-	40

Wärtsilä UK Ltd., 4, Marples Way, Havant, Hampshire, PO9 1NX, UK

The information contained in this document is the property of Wärtsilä UK Ltd and must not be disclosed without written consent. Title to information is neither sold or transferred and document is subject to return upon demand. Values in this document are not binding. Right of alteration reserved. ©2015
Registered Number: 1004816
Registered Office: Wärtsilä UK Ltd., Havant, Hampshire, UK

50 MILLIMETRES FULL SIZE

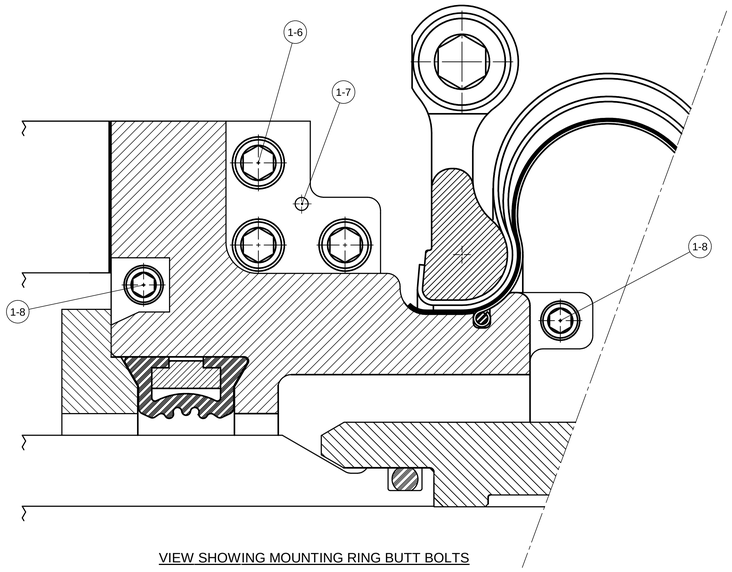

VIEW SHOWING MOUNTING RING BUTT BOLTS

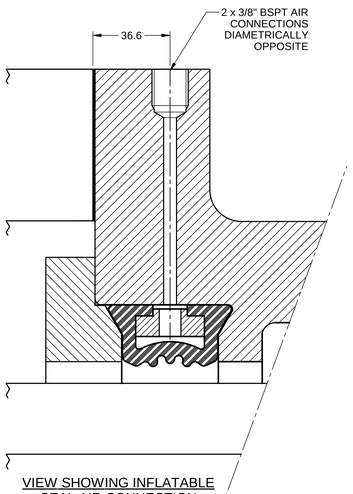

VIEW SHOWING INFLATABLE
SEAL AIR CONNECTION

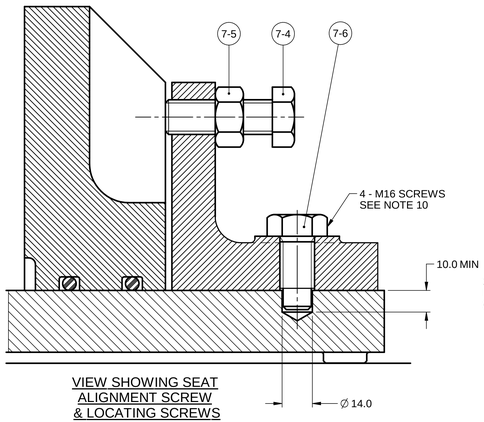

VIEW SHOWING SEAT
ALIGNMENT SCREW
& LOCATING SCREWS
SCALE 1:2

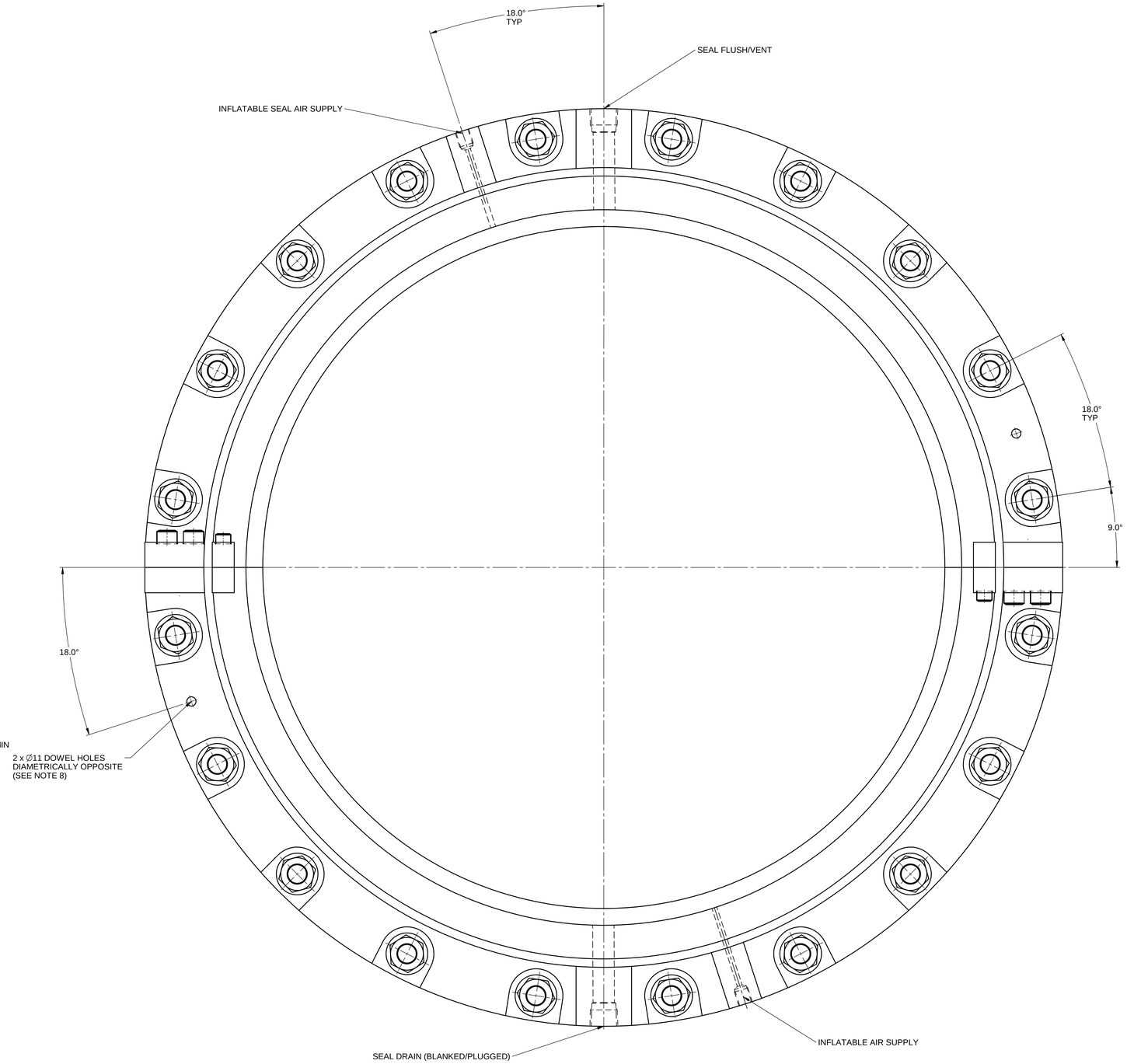

VIEW ON ARROW 'B;
MOUNTING RING ONLY
SCALE 1:2

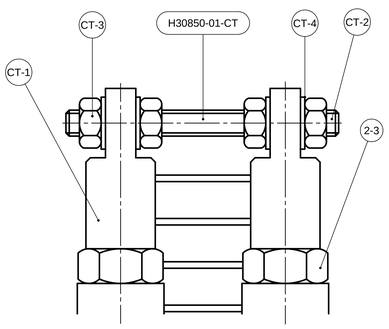

VIEW ON ARROW 'A' SHOWING
COMPRESSION TOOL ASSEMBLY
LOCKED FOR TRANSIT PURPOSES
REMOVE BEFORE ROTATING SHAFT
(NOT TO SCALE)

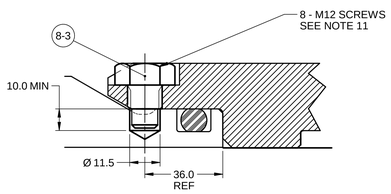

VIEW SHOWING OFFSET SPLIT
LINER SCREWS

INSTALLATION

CLASSIFICATION: LR			1ST ANGLE:	ACCESS CODE: 4	OWNER: CCG	YARD: -	CUSTOMER: WCA
FLUIDS: INTERNAL / EXTERNAL	WATER / AIR				VESSEL NAME: CCGS TERRY FOX	USED ON: ICEBREAKER	REF/FUNC. LOC.: 100015596
	MIN	NOM	MAX		DRAWN BY: W. CROOK	CHECKED BY: J. BURT	MAX. MASS: -
PRESSURES, BAR: INTERNAL	-	-	1		DRAWN DATE: 2 MAR 2015	DATE REVISED: 5 OCT 2015	SHEET: 2 OF 2
EXTERNAL	-	-	-				
DIFFERENTIAL	-	-	-				
SHAFT MOVEMENTS: AXIAL INBOARD, mm	N/A	-	2.5		SEAL CODE/BASED ON: 41615/910/41/1013/38/75/41863 FL = 429 ± 3.3		
AXIAL OUTBOARD, mm	N/A	-	8.5				
RADIAL, mm	N/A	-	10				
ANGULAR, °	N/A	-	-				
SHAFT SPEED, RPM	-	120	-		TITLE: GA OF 840 MOD 800 TYPE MA SEAL		
TEMPERATURE, °C: INTERNAL	-5	-	40				
EXTERNAL	-5	-	40				

WÄRTSILÄ

Wärtsilä UK Ltd., 4, Marples Way, Havant, Hampshire, PO9 1NX, UK

The information contained in this document is the property of Wärtsilä UK Ltd and must not be disclosed without written consent. Title to information is neither sold or transferred and document is subject to return upon demand. Values in this document are not binding. Right of alteration reserved. © 2015
Registered Number: 1004816
Registered Office: Wärtsilä UK Ltd., Havant, Hampshire, UK

SIZE:	DRAWING NUMBER:	REV:
A0	H30850-01	C

50 MILLIMETRES FULL SIZE