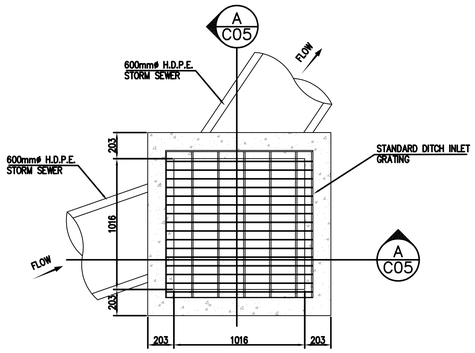

PLAN

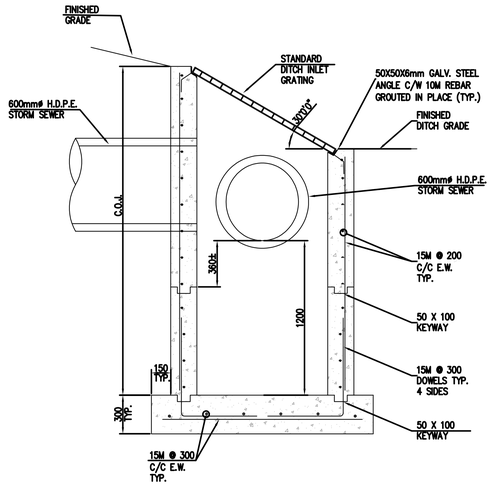

SECTION A C05

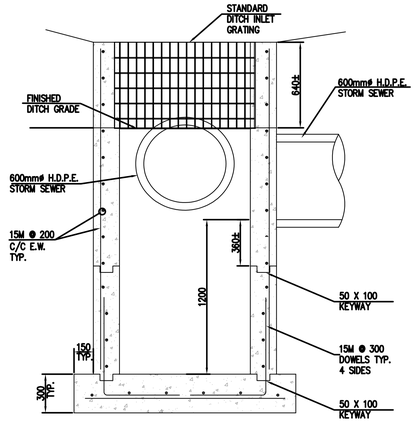

SECTION A C05

TYPICAL DITCH INLET

SCALE : 1:50

0m 1m 2m 3m 4m 5m

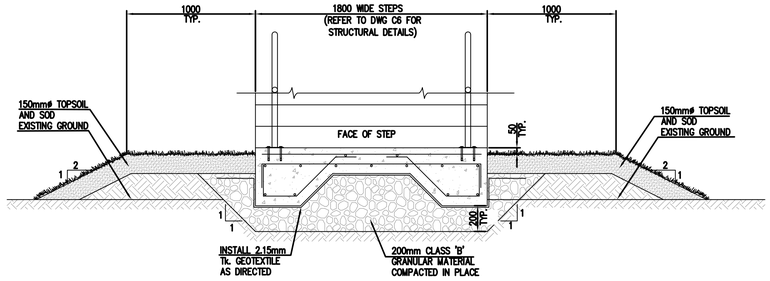

SECTION A C02

SCALE : 1:10

0mm 100 200 300 400 500 600 700 800 900 1000mm

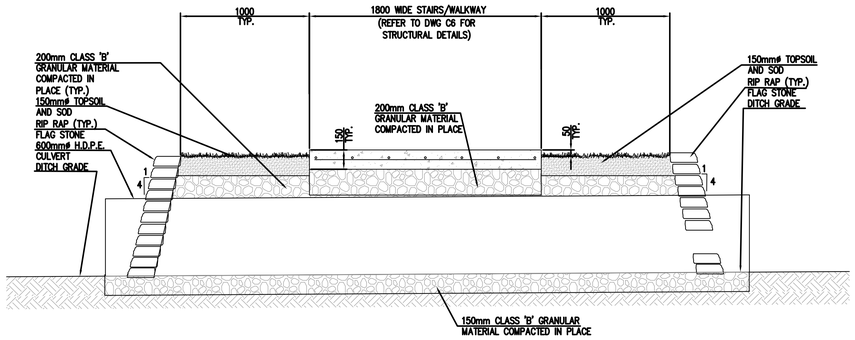

SECTION A C02

SCALE : 1:10

0mm 100 200 300 400 500 600 700 800 900 1000mm

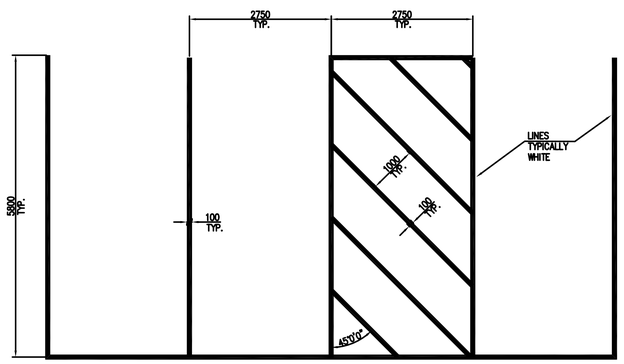

NOTE:

1. PAVEMENT MARKINGS AS PER UNIFORM TRAFFIC CONTROL DEVICES FOR CANADA

PARKING STALL PAVEMENT MARKING DETAIL

SCALE : 1:50

0m 1m 2m 3m 4m 5m

NOTES

1. SIGN POST TO BE GALVANIZED CONTINUOUS WELD SCHEDULE 40 PIPE – O.D. 60mm.
2. EXACT LOCATION OF SIGN TO BE DETERMINED ON SITE

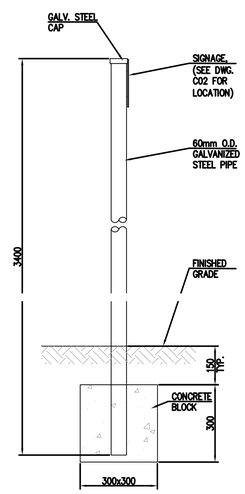

TYPICAL SIGN DETAIL

SCALE : 1:10

0mm 100 200 300 400 500 600 700 800 900 1000mm

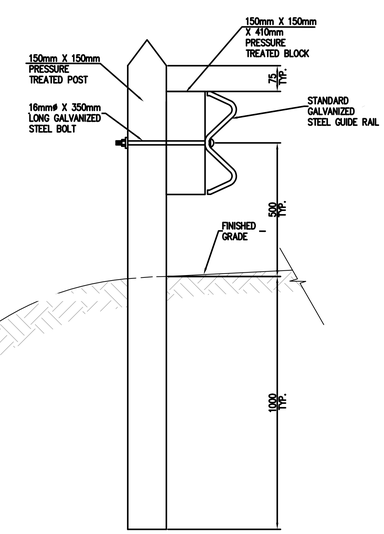

TYPICAL GUIDERAIL DETAIL

SCALE : 1:10

0mm 100 200 300 400 500 600 700 800 900 1000mm

CONCRETE NOTES

1. CONCRETE MATERIALS, METHODS OF CONCRETE CONSTRUCTION, INCLUDING FORMWORK TO MEET LATEST EDITIONS OF CSA STANDARDS.
2. CAST IN PLACE CONCRETE COMPRESSIVE STRENGTH TO BE 30MPa AT 28 DAYS UNLESS NOTED OTHERWISE. PRECAST CONCRETE COMPRESSIVE STRENGTH TO BE 35MPa AT 28 DAYS.
3. REBAR TO CONFORM TO CSA G30.18 Fy=400 KPa UNLESS NOTED OTHERWISE.
4. ALL BAR BENDING DETAILING AND PLACING TO ACI SP–66–04 FOR DETAILING REINFORCED CONCRETE STRUCTURES, UNLESS NOTED OTHERWISE.
5. PROVIDE CORNER BARS AND VERTICAL DOWELS TO MATCH HORIZONTAL AND VERTICAL STEEL.
6. MINIMUM COVER TO REINFORCEMENT:
   WALLS – 75mm
   FOOTINGS – 75mm
7. ALL BAR SPLICES TO BE 900mm LONG, UNLESS NOTED OTHERWISE.
8. FOOTINGS TO REST ON UNDISTURBED SOIL HAVING AN MIN. ALLOWABLE BEARING CAPACITY OF 200KPa
9. DO NOT BACKFILL UNTIL CONCRETE HAS REACHED SPECIFIED STRENGTH.

Public Works and Government Services Canada / Travaux Publics et Services gouvernementaux Canada

revisions		date
2	ISSUED FOR TENDER	07/09/2018
1	ISSUED FOR 99% REVIEW	06/08/2018
0	ISSUED FOR 66% REVIEW	05/07/2018

project / projet

NAFC SITE UPGRADE PHASE 2

drawing / dessin

DETAILS AND SECTIONS

designed / conçu: L. J. M./J. F. A.
date: MAY 02, 2018
drawn / dessiné: L. J. M.
date: MAY 02, 2018
approved / approuvé: J. F. A.
date: MAY 02, 2018
Tender / Soumission: Digitally signed by Styles, Jordan Date: 2018.08.09 20:12:28 -02'30'
PWGSC Project Manager / Administrateur de projets TPSGC

REGISTERED PROFESSIONAL ENGINEER J. F. AYLWARD SIGNATURE 2018/07/09 DATE PROVINCE OF NEWFOUNDLAND

project number / no. du projet: R.083332.004

drawing no. / no. du dessin: C05

PWGSC B1 (2004)

E-DRM/GDD-E: 01N1009A087C05