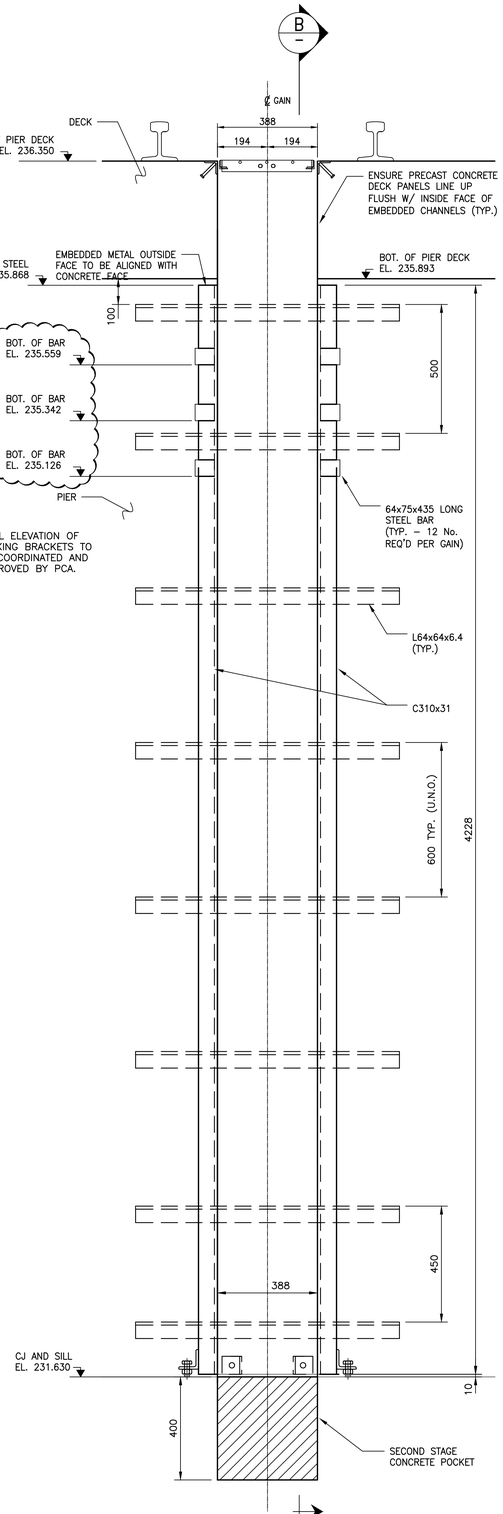

A ELEVATION
STOPLOG EMBEDDED GUIDES AND JACKING BRACKET
SCALE 1:10

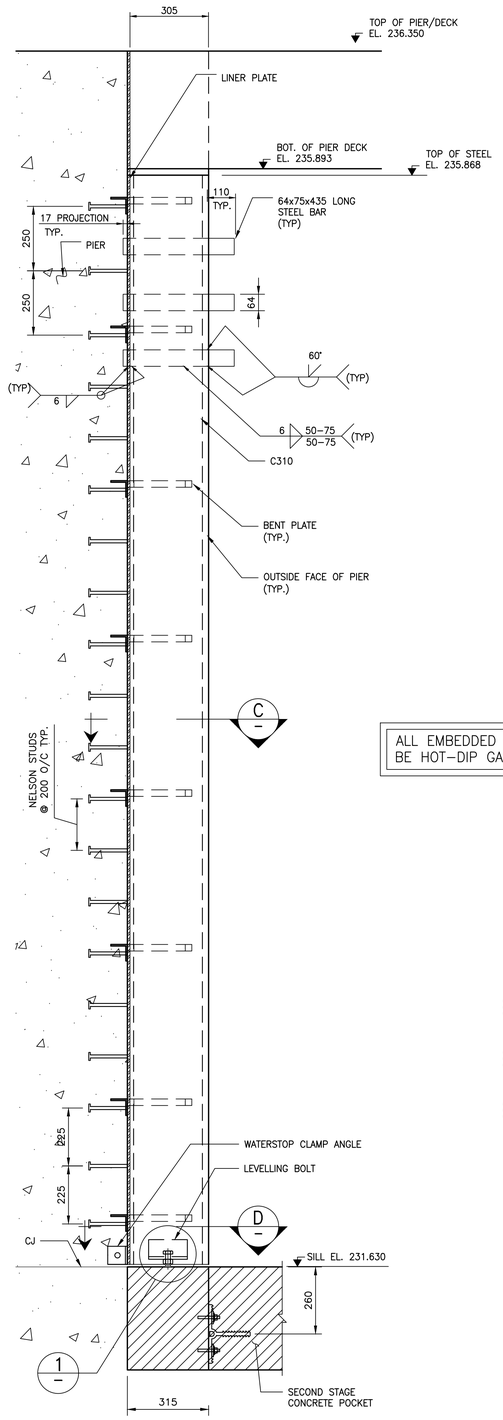

B SECTION
STOPLOG EMBEDDED GUIDES AND JACKING BRACKET
SCALE 1:10

ALL EMBEDDED PARTS TO BE HOT–DIP GALVANIZED

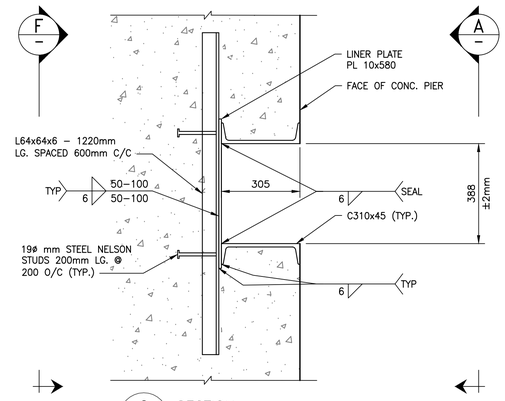

C SECTION
GUIDE
SCALE 1:10

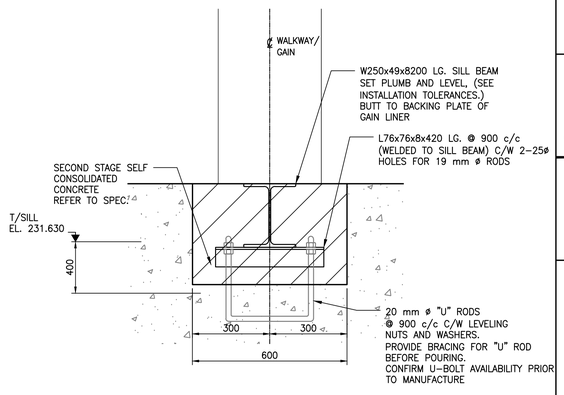

E SECTION
SILL BEAM
SCALE 1:10

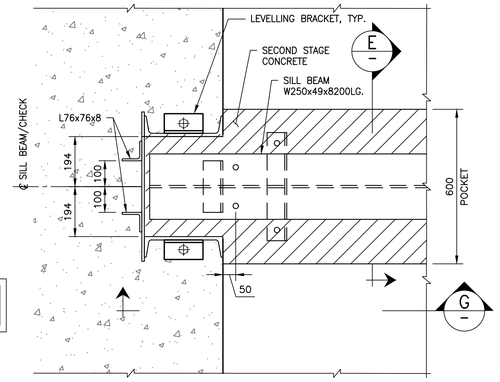

D SECTION
GUIDE AT SILL
SCALE 1:10

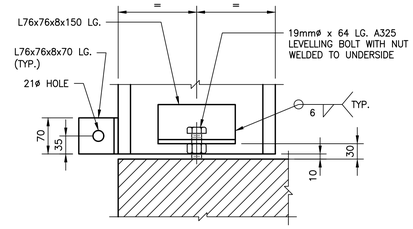

1 DETAIL
LEVELLING BRACKET
SCALE 1:5

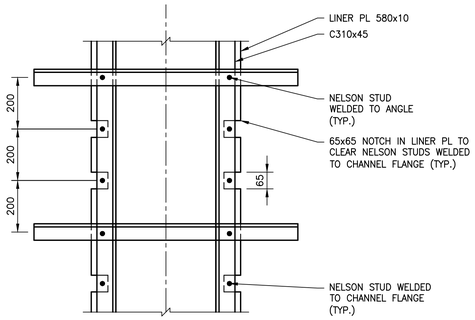

F SECTION
NELSON STUD WELDING
SCALE 1:10

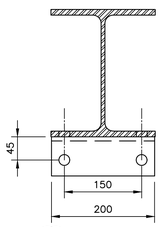

H SECTION
SILL BEAM
SCALE 1:5

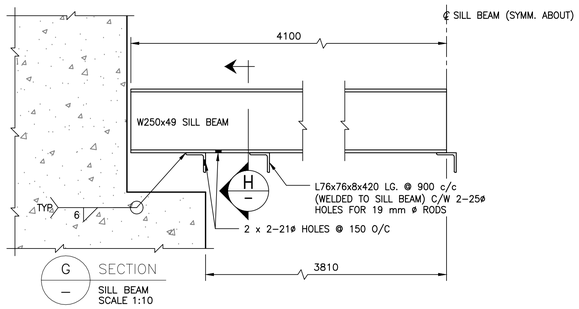

G SECTION
SILL BEAM
SCALE 1:10

STOPLOG EMBEDDED PARTS INSTALLATION TOLERANCES

1. CENTRELINE POSITION OF TOP GUIDE TO BE WITHIN ±3mm OF SPECIFIED POSITION ON DRAWINGS.
2. MAXIMUM DEVIATION FROM TRUE VERTICALITY FOR THE OVERALL HEIGHT : 5mm IN EACH DIRECTION PERPENDICULAR TO FLOW, 3mm IN DIRECTION PARALLEL TO FLOW, FOR EACH FACE. ANYWHERE ALONG THE HEIGHT.
3. SILL BEAM:
   - LEVEL: MAXIMUM VERTICAL DEVIATION OF ± 3mm OVER FULL LENGTH.
   - STRAIGHTNESS: ±1mm ON 1800mm STRAIGHT EDGE.
4. DISTANCE BETWEEN LATERAL FACES OF GUIDES ACROSS ONE PASSAGE : NOMINAL DISTANCE +/– 10mm, ANYWHERE ALONG THE HEIGHT.
5. BRACING DURING CONCRETE POUR BY CONTRACTOR.

Public Services and Procurement Canada
Services publics et Approvisionnement Canada

Parks Canada Infrastructure
Ontario Region
Infrastructure de Parcs Canada
Région de l'Ontario

Canada

KGS GROUP CONSULTING ENGINEERS

wsp

NOTES:

1. DIMENSIONS IN MILLIMETRES / ELEVATIONS IN METRES UNLESS NOTED OTHERWISE.
2. ALL EMBEDDED PARTS TO BE HOT–DIP GALVANIZED.

PRELIMINARY
NOT TO BE USED FOR CONSTRUCTION

No.	Description	Dwn By / Des.Par	Date
D	RE-ISSUED FOR TENDER	KJC	18/08/27
C	ISSUED FOR TENDER	PJZ	18/07/31
B	ISSUED FOR 99% REVIEW	PJZ	18/07/05
A	ISSUED FOR 66% REVIEW	KJC	18/05/09

Revision / Révision

A Detail number / No. du détail
B Location dwg. no. / No. sur dessin

Project title / Titre du projet

TRENT-SEVERN WATERWAY DAM AT LOCK 38 REPLACEMENT

Drawing title / Titre du dessin

CONCRETE DAM EMBEDDED PARTS AND LOG JACKING BRACKET

Drawn by / Dessiné par: KJC	Designed by / Conçu par: WSM
Approved by / Approuvé par: SB	Drawing Date / Date du dessin: MAY 2018
Project manager / Administrateur de projet: DAVE NESS	
Contract No. / Numéro du contrat: EQ754-162649	Drawing No. / Dessine No.: S011
Project No. / Numéro du projet: R.076951.906	Sheet / Feuille 1 of / du 1