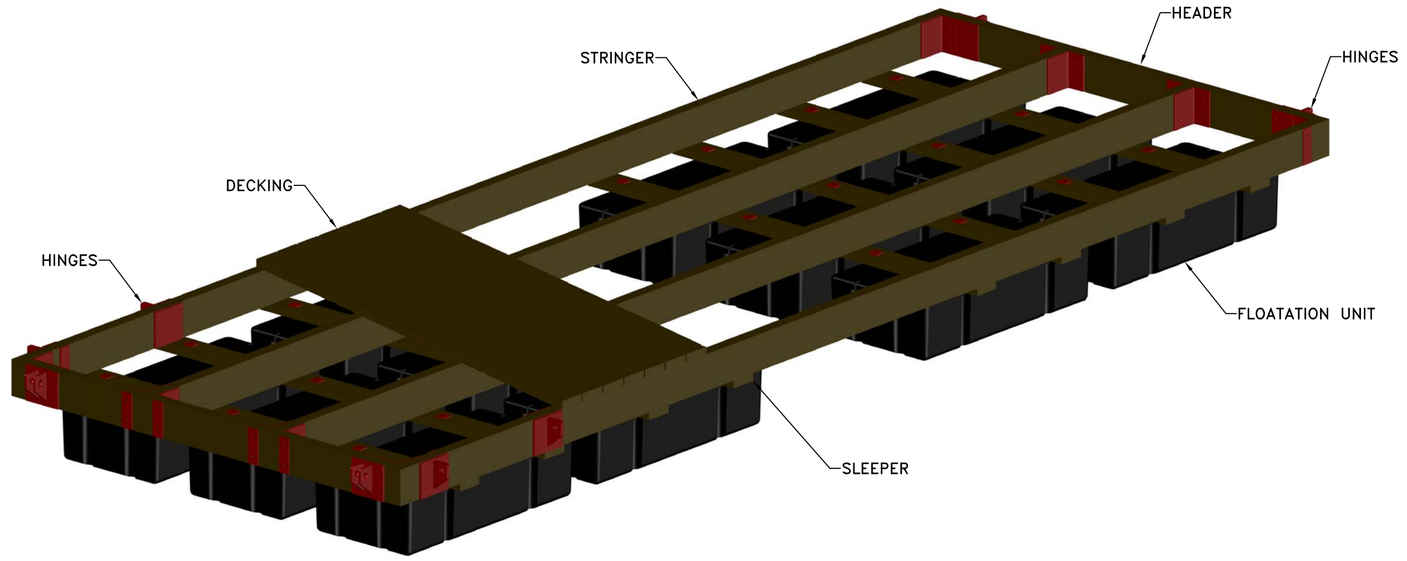

ISOMETRIC
SCALE: 1:20

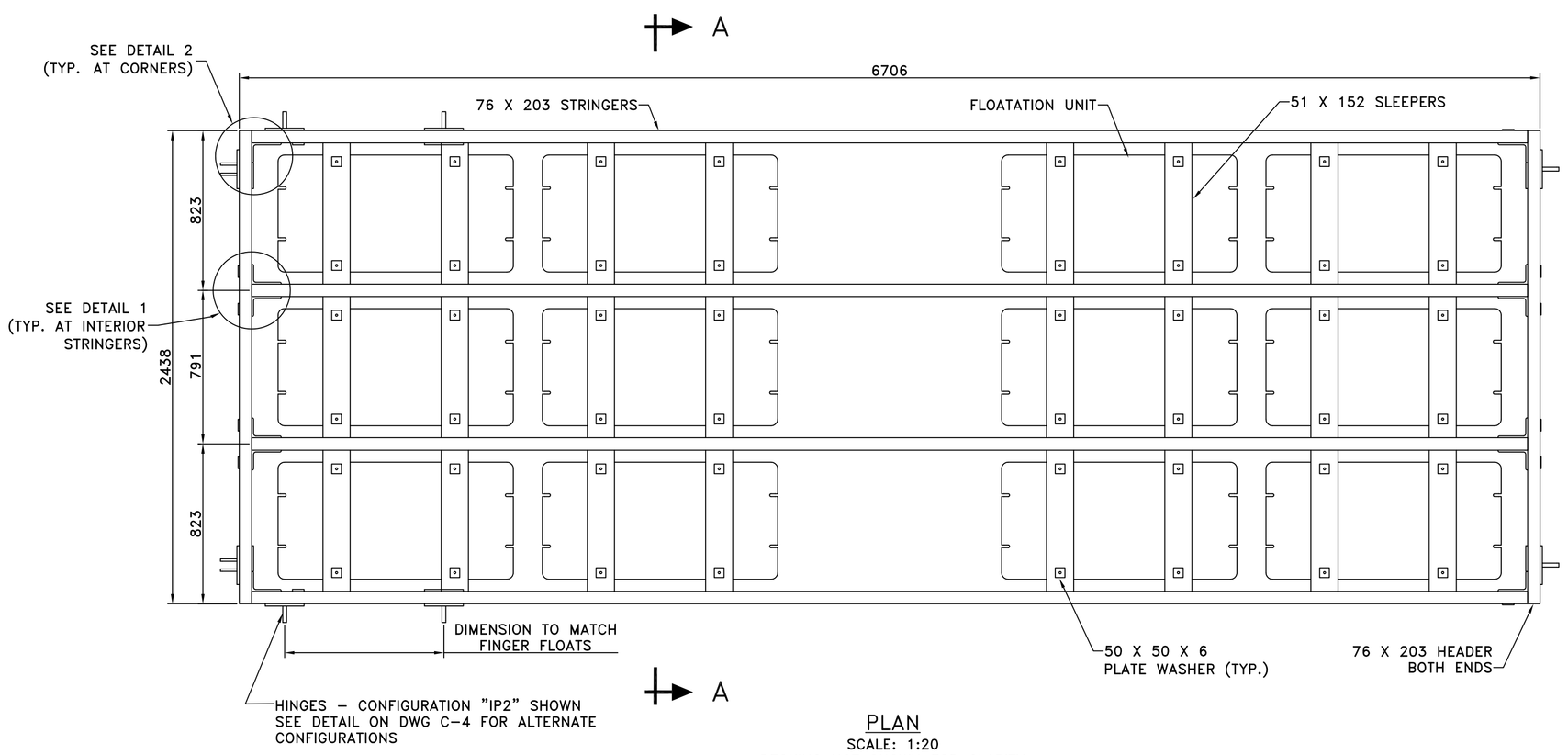

PLAN
SCALE: 1:20
DECKING NOT SHOWN FOR CLARITY

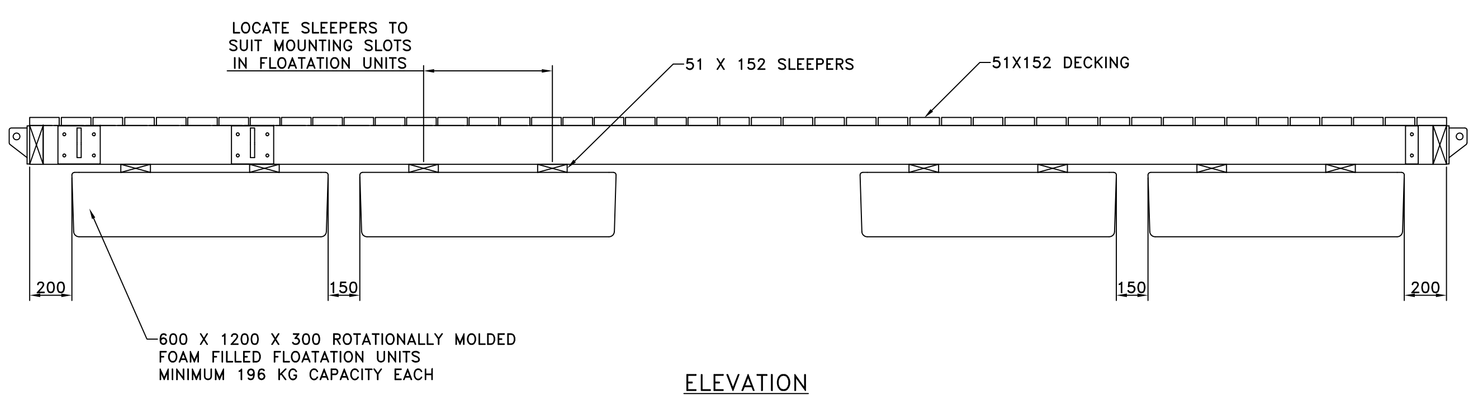

ELEVATION
SCALE: 1:20

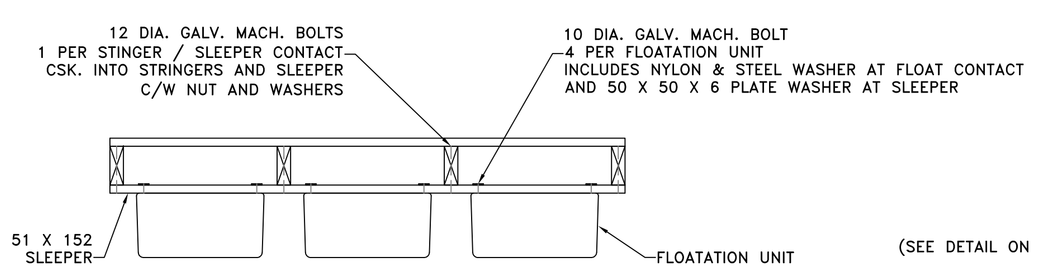

SECTION A–A
SCALE: 1:20

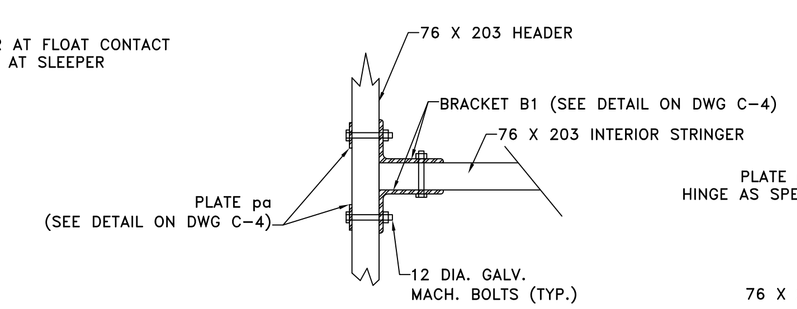

DETAIL 1
SCALE: 1:10

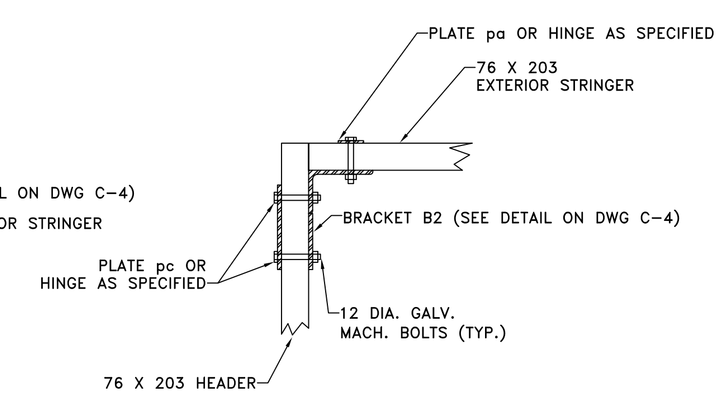

DETAIL 2
SCALE: 1:10

GOVERNMENT OF CANADA / GOUVERNEMENT DU CANADA
FISHERIES AND OCEANS / PÊCHES ET OCÉANS

SMALL CRAFT HARBOURS
CENTRAL AND ARCTIC REGION

NOTES:

1. DIMENSIONS ARE IN MILLIMETRES UNLESS OTHERWISE STATED
2. CONTRACTOR TO SHOP PAINT ALL STEEL HARDWARE WITH TWO (2) COATS OF RED RUST INHIBITOR PAINT

REVISIONS:		DATE:
0	ISSUED FOR TENDER	OCTOBER 2018

SCALE: AS SHOWN
CLASS:

PROJECT:
FLOAT WHARF REPLACEMENT

DESCRIPTION:
2.438m x 6.706m
FLOAT WHARF
CONSTRUCTION DETAILS

DRAWN: S.K.
APPROVED: E.M.
DATE: SEPT. 2018
DATE: SEPT. 2018

LOCATION:
HAY RIVER –
EAST CHANNEL, NT

DRAWING NO.: C-3 OF 5
LOCATOR CODE: 5976