Public Works and Government Services Canada | Travaux publics et Services gouvernementaux Canada

RETURN BIDS TO:
RETOURNER LES SOUMISSIONS À:

Bid Receiving - PWGSC / Réception des soumissions - TPSGC
11 Laurier St. / 11, rue Laurier
Place du Portage, Phase III
Core 0B2 / Noyau 0B2
Gatineau, Québec K1A 0S5
Bid Fax: (819) 997-9776

REQUEST FOR PROPOSAL
DEMANDE DE PROPOSITION

Proposal To: Public Works and Government Services Canada

We hereby offer to sell to Her Majesty the Queen in right of Canada, in accordance with the terms and conditions set out herein, referred to herein or attached hereto, the goods, services, and construction listed herein and on any attached sheets at the price(s) set out therefor.

Proposition aux: Travaux Publics et Services Gouvernementaux Canada

Nous offrons par la présente de vendre à Sa Majesté la Reine du chef du Canada, aux conditions énoncées ou incluses par référence dans la présente et aux annexes ci-jointes, les biens, services et construction énumérés ici sur toute feuille ci-annexée, au(x) prix indiqué(s).

Comments - Commaintaires

Vendor/Firm Name and Address
Raison sociale et adresse du fournisseur/de l'entrepreneur

Issuing Office - Bureau de distribution

Fuel & Construction Products Division
L'Esplanade Laurier,
140 O'Connor Street,
East Tower, 4th floor,
Ottawa
Ontario
K1A 0S5

Title - Sujet R&O SPACE & WATER HEATERS	
Solicitation No. - N° de l'invitation W8486-184162/A	**Date** 2018-11-08
Client Reference No. - N° de référence du client W8486-184162	
GETS Reference No. - N° de référence de SEAG PW-$$HL-668-75797	
File No. - N° de dossier hl668.W8486-184162	**CCC No./N° CCC - FMS No./N° VME**
Solicitation Closes - L'invitation prend fin **at - à 02:00 PM** **on - le 2018-12-19**	**Time Zone** **Fuseau horaire** Eastern Standard Time EST
F.O.B. - F.A.B. **Plant-Usine:** ☐ **Destination:** ☐ **Other-Autre:** ☐	
Address Enquiries to: - Adresser toutes questions à: Boyer, Michel	**Buyer Id - Id de l'acheteur** hl668
Telephone No. - N° de téléphone (613) 295-9383 ( )	**FAX No. - N° de FAX** ( ) -
Destination - of Goods, Services, and Construction: **Destination - des biens, services et construction:** Specified Herein Précisé dans les présentes	

Instructions: See Herein

Instructions: Voir aux présentes

Delivery Required - Livraison exigée See Herein	**Delivery Offered - Livraison proposée**
Vendor/Firm Name and Address **Raison sociale et adresse du fournisseur/de l'entrepreneur** **Telephone No. - N° de téléphone** **Facsimile No. - N° de télécopieur**	
Name and title of person authorized to sign on behalf of Vendor/Firm (type or print) **Nom et titre de la personne autorisée à signer au nom du fournisseur/ de l'entrepreneur (taper ou écrire en caractères d'imprimerie)** **Signature**	**Date**

Canada

TABLE OF CONTENTS

PART 1 - GENERAL INFORMATION

1.1 Security Requirements

There is no security requirement associated with this bid solicitation.

1.2 Statement of Work

The Work to be performed is detailed under Annex “A” - Statement of Work Free Flow Tactical Mobile Heaters and Related Equipment for Repair and Overhaul and Annex “B” - Logistics Statement of Work Tactical Mobile Heaters and Related Equipment for Repair and Overhaul.

Special Investigation and Technical Studies (SITS), Technical Investigation and Engineering Support (TIES), Field Services Representatives (FSR), and Mobile Repair Parties (MRPs) will be authorized using DND’s Task Authorization policy.

Free Flow R & O Work will be performed in accordance with ALM-184-001/JS-001 and as per Annex «B» - Logistics Statement of Work Tactical Mobile Heaters and Related Equipment for Repair and Overhaul.

1.3 Cash Flow

While the funding for this Contract will be limited to $1,700,000.00, the projected Cash Flow for the duration of the contract is expected to be as follows (including all work/task and excluding the Applicable Taxes):

First two year periods:

2018/2019	$850,000.00
2019/2020	$850,000.00

1.4 Debriefings

Bidders may request a debriefing on the results of the bid solicitation process. Bidders should make the request to the Contracting Authority within 15 working days from receipt of the results of the bid solicitation process. The debriefing may be in writing, by telephone or in person.

1.5 Trade Agreements

The requirement is subject to the provisions of the World Trade Organization Agreement on Government Procurement (WTO-AGP), the North American Free Trade Agreement (NAFTA), the Canadian-European Union Comprehensive Economic and Trade Agreement (CETA), and the Canadian Free Trade Agreement (CFTA).

1.6 **Epost Connect**

This bid solicitation allows bidders to use the epost Connect service provided by Canada Post Corporation to transmit their bid electronically. Bidders must refer to Part 2 entitled Bidder Instructions, and Part 3 entitled Bid Preparation Instructions, of the bid solicitation, for further information.

PART 2 - BIDDER INSTRUCTIONS

2.1 Standard Instructions, Clauses and Conditions

All instructions, clauses and conditions identified in the bid solicitation by number, date and title are set out in the Standard Acquisition Clauses and Conditions Manual (https://buyandsell.gc.ca/policy-and-guidelines/standard-acquisition-clauses-and-conditions-manual) issued by Public Works and Government Services Canada.

Bidders who submit a bid agree to be bound by the instructions, clauses and conditions of the bid solicitation and accept the clauses and conditions of the resulting contract.

The 2003 (2018-05-22) Standard Instructions - Goods or Services - Competitive Requirements, are incorporated by reference into and form part of the bid solicitation.

Subsection 5.4 of 2003, Standard Instructions - Goods or Services - Competitive Requirements, is amended as follows:

Delete: 60 days
Insert: 120 days

2.2 Controlled Goods Program- Bid

1. As the resulting contract will require the production of or access to controlled goods that are subject to the *Defence Production Act*, R.S. 1985, c. D-1, bidders are advised that within Canada only persons who are registered, exempt or excluded under the Controlled Goods Program (CGP) are lawfully entitled to examine, possess or transfer controlled goods. Details on how to register under the CGP are available at: Controlled Goods Program and registration is carried out as follows:

    a. When the bid solicitation includes controlled goods information or technology, the Bidder must be registered, exempt or excluded under the CGP before receiving the bid solicitation. Requests for technical data packages or specifications related to controlled goods should be made in writing to the Contracting Authority identified in the bid solicitation and must contain the CGP registration number or written proof of exemption or exclusion of the Bidder and of any other person to whom the Bidder will give access to the controlled goods.
    b. When the bid solicitation does not include controlled goods information or technology but the resulting contract requires the production of or access to controlled goods, the successful Bidder and any subcontractor who will be producing or accessing controlled goods must be registered, exempt or excluded under the CGP before examining, possessing or transferring controlled goods.
    c. When the successful Bidder and any subcontractor proposed to examine, possess or transfer controlled goods are not registered, exempt or excluded under the CGP at time of contract award, the successful Bidder and any subcontractor must, within seven (7) working days from receipt of written notification of contract award, ensure that the required application(s) for registration or exemption are submitted to the CGP. No examination, possession or transfer of controlled goods must be performed until the successful Bidder has provided proof, satisfactory to the Contracting Authority that the successful Bidder and any subcontractor are registered, exempt, or excluded under the CGP.

Failure to provide proof, satisfactory to the Contracting Authority, that the successful Bidder and any subcontractor are registered, exempt or excluded under the CGP, within thirty (30) days from receipt of written notification of contract award, will be considered a default under the resulting

contract except to the extent that Canada is responsible for the failure due to delay in processing the application.

Bidders are advised that all information on the Application for Registration (or exemption) Form will be verified and errors or inaccuracies may cause significant delays and/or result in denial of registration or exemption.

2.3 Condition of Material - Bid

Material supplied must be new and conform to the latest issue of the applicable drawing, specification and/or part number that is in effect on the bid solicitation closing date.

2.4 Submission of Bids

Bids must be submitted only to Public Works and Government Services Canada (PWGSC) Bid Receiving Unit by the date, time and place indicated in the bid solicitation.

2.5 Enquiries - Bid Solicitation

All enquiries must be submitted in writing to the Contracting Authority no later than 10 calendar days before the bid closing date. Enquiries received after that time may not be answered.

Bidders should reference as accurately as possible the numbered item of the bid solicitation to which the enquiry relates. Care should be taken by Bidders to explain each question in sufficient detail in order to enable Canada to provide an accurate answer. Technical enquiries that are of a proprietary nature must be clearly marked "proprietary" at each relevant item. Items identified as "proprietary" will be treated as such except where Canada determines that the enquiry is not of a proprietary nature. Canada may edit the question(s) or may request that the Bidder do so, so that the proprietary nature of the question(s) is eliminated, and the enquiry can be answered to all Bidders. Enquiries not submitted in a form that can be distributed to all Bidders may not be answered by Canada.

2.6 Applicable Laws

Any resulting contract must be interpreted and governed, and the relations between the parties determined, by the laws in force in Ontario.

Bidders may, at their discretion, substitute the applicable laws of a Canadian province or territory of their choice without affecting the validity of their bid, by deleting the name of the Canadian province or territory specified and inserting the name of the Canadian province or territory of their choice. If no change is made, it acknowledges that the applicable laws specified are acceptable to the Bidders.

PART 3 - BID PREPARATION INSTRUCTIONS

3.1 Bid Preparation Instructions

If the Bidder chooses to submit its bid electronically, Canada requests that the Bidder submits its bid in accordance with section 08 of the 2003 standard instructions. Bidders must provide their bid in a single transmission. The epost Connect service has the capacity to receive multiple documents, up to 1GB per individual attachment.

The bid must be gathered per section and separated as follows:

Section I: Technical Bid
Section II: Financial Bid
Section III: Certifications

If the Bidder chooses to submit its bid in hard copies, Canada requests that the Bidder submits its bid in separately bound sections as follows:

Section I: Technical Bid (three (3) hard copies)

Section II: Financial Bid (one (1) hard copy)

Section III: Certifications (one (1) hard copy)

Documentation provided by the Bidder with their proposal for the purpose of technical evaluation shall be submitted on 8.5 x 11.0 inch white paper.

If the Bidder is simultaneously providing copies of its bid using multiple acceptable delivery methods, and if there is a discrepancy between the wording of any of these copies and the electronic copy provided through epost Connect service, the wording of the electronic copy provided through epost Connect service will have priority over the wording of the other copies.

Prices must appear in the financial bid only. No prices must be indicated in any other section of the bid.

Canada requests that bidders follow the format instructions described below in the preparation of hard copy of their bid:

(a) use 8.5 x 11 inch (216 mm x 279 mm) paper;
(b) use a numbering system that corresponds to the bid solicitation.

In April 2006, Canada issued a policy directing federal departments and agencies to take the necessary steps to incorporate environmental considerations into the procurement process Policy on Green Procurement (https://www.tbs-sct.gc.ca/pol/doc-eng.aspx?id=32573). To assist Canada in reaching its objectives, bidders should:

1) use 8.5 x 11 inch (216 mm x 279 mm) paper containing fibre certified as originating from a sustainably-managed forest and containing minimum 30% recycled content; and

2) use an environmentally-preferable format including black and white printing instead of colour printing, printing double sided/duplex, using staples or clips instead of cerlox, duotangs or binders.

Section I: Technical Bid

Technical bid preparation instructions are provided in Annex “D” – Bid Evaluation Plan. In their technical bid, Bidders should demonstrate their understanding of the requirements contained in the bid solicitation and explain how they will meet these requirements. Bidders should demonstrate their capability to perform on any resultant contract and describe their approach in a thorough, concise and clear manner for carrying out the work.

The technical bid should address clearly and in sufficient depth the points that are subject to the evaluation criteria against which the bid will be evaluated. Simply repeating the statement contained in the bid solicitation is not sufficient. In order to facilitate the evaluation of the bid, Canada requests the bidders address and present topics in the order of the evaluation criteria under the same headings. To avoid duplication, bidders may refer to different sections of their bids by identifying the specific paragraph and page number where the subject topic has already been addressed.

Section II: Financial Bid

Bidders must submit their financial bid in accordance with Annex “C” – Basis of Payment and Price Schedule. The total amount of Applicable Taxes must be shown separately. Price and rate must be firm and in Canadian dollars.

The Bidder must provide costs based on hourly labour rates, mark-ups, etc. to meet the scope of the Repair and Overhaul Contract. The hourly rates must be firm, all-inclusive of direct & indirect costs, overhead rates, General and Administrative rates and profit. The Bidder must include costs for any additional types of services required (e.g. environmental costs).

3.1.1 Electronic Payment of Invoices – Bid

If you are willing to accept payment of invoices by Electronic Payment Instruments, complete Annex “E” Electronic Payment Instruments, to identify which ones are accepted.

If “E” Electronic Payment Instruments is not completed, it will be considered as if Electronic Payment Instruments are not being accepted for payment of invoices.

3.1.2 SACC Manual Clauses

The following terms and conditions are incorporated herein

SACC Reference	Section	Date
C3011T	Exchange Rate Fluctuation	2013-11-06

Section III: Certifications

Bidders must submit the certifications and additional information required under Part 5.

PART 4 - EVALUATION PROCEDURES AND BASIS OF SELECTION

4.1 Evaluation Procedures

(a) Bids will be assessed in accordance with the entire requirement of the bid solicitation including the technical and financial evaluation criteria.
(b) An evaluation team composed of representatives of Canada will evaluate the bids.

4.1.1 Technical Evaluation

All bids must be completed in full and provide all of the information requested in the bid solicitation to enable full and complete evaluation.

4.1.1.1 Mandatory Technical Criteria

Refer to Annex “D” – Bid Evaluation Plan, attached.

4.1.2 Optional Facility review

Canada retains the option to visit a Bidder’s facility prior to Contract award to review a Bidder’s capability to perform the potential Work and verify the accuracy of the Bidder’s proposal.

4.1.3 Financial Evaluation

Refer to Annex “C” Basis of Payment and Pricing Schedule and Annex “D” Part 4 STAGE 3: FINANCIAL EVALUATION.

4.1.3.1 Mandatory Financial Criteria

a) The Bidder must bid a firm rate in Canadian dollars, FCA Free Carrier Contractor's facility, Incoterms 2000. Customs Duty are included and Applicable Taxes extra for each item offered; and
b) The Bidders’ financial bid must be in accordance with the Basis of Payment and Annex “C” – Basis of Payment and Pricing Schedule.

4.2 Basis of Selection

1. To be declared responsive, a bid must:
   a. comply with all the requirements of the bid solicitation;
   b. meet all mandatory technical evaluation criteria; and
   c. obtain the required minimum of 116 points overall for the technical evaluation criteria which are subject to point rating, and must meet the first (i.e. minimum) performance level of each rated criteria. The rating is performed on a scale of 155 points.

2. The bids that do not comply with the requirements at a), or b) or c) will be declared non-responsive. The responsive bid with the lowest evaluated price with be recommended for a contract.

PART 5 – CERTIFICATIONS AND ADDITIONAL INFORMATION

Bidders must provide the required certifications and additional information to be awarded a contract.

The certifications provided by Bidders to Canada are subject to verification by Canada at all times. Unless specified otherwise, Canada will declare a bid non-responsive, or will declare a contractor in default if any certification made by the Bidder is found to be untrue whether made knowingly or unknowingly, during the bid evaluation period or during the contract period.

The Contracting Authority will have the right to ask for additional information to verify the Bidder's certifications. Failure to comply and to cooperate with any request or requirement imposed by the Contracting Authority will render the bid non-responsive or constitute a default under the Contract.

5.1 Certification Required with the Bid

Bidders must submit the following duly completed certifications as part of their bid.

5.1.1 Integrity Provisions - Declaration of Convicted Offences

In accordance with the Integrity Provisions of the Standard Instructions, all Bidders must provide with their bid, **if applicable**, the declaration form available on the Forms for the Integrity Regime website (http://www.tpsgc-pwgsc.gc.ca/ci-if/declaration-eng.html), to be given further consideration in the procurement process.

5.2 Certifications Precedent to Contract Award and Additional Information

The certifications and additional information listed below should be submitted with the bid, but may be submitted afterwards. If any of these required certifications or additional information is not completed and submitted as requested, the Contracting Authority will inform the Bidder of a time frame within which to provide the information. Failure to provide the certifications or the additional information listed below within the time frame provided will render the bid non-responsive.

5.2.1 Integrity Provisions – List of Names

In accordance with the section titled Information to be provided when bidding, contracting or entering into a real procurement agreement of the Ineligibility and Suspension Policy (http://www.tpsgc-pwgsc.gc.ca/ciif/politique-policy-eng.html), the Bidder must provide the required documentation, as applicable, to be given further consideration in the procurement process.

5.2.2 Federal Contractors Program for Employment Equity - Bid Certification

By submitting a bid, the Bidder certifies that the Bidder, and any of the Bidder's members if the Bidder is a Joint Venture, is not named on the Federal Contractors Program (FCP) for employment equity "FCP Limited Eligibility to Bid" list available at the bottom of the page of the Employment and Social Development Canada (ESDC) - Labour's website (https://www.canada.ca/en/employment-social-development/programs/employmentequity/federal-contractorprogram.html#).

Canada will have the right to declare a bid non-responsive if the Bidder, or any member of the Bidder if the Bidder is a Joint Venture, appears on the "FCP Limited Eligibility to Bid" list at the time of contract award.

Canada will also have the right to terminate the Contract for default if a Contractor, or any member of the Contractor if the Contractor is a Joint Venture, appears on the "FCP Limited Eligibility to Bid" list during the period of the Contract.

The Bidder must provide the Contracting Authority with a completed annex titled Federal Contractors Program for Employment Equity - Certification, before contract award. If the Bidder is a Joint Venture, the Bidder must provide the Contracting Authority with a completed annex, herein

Annex ‘‘F’’ Federal Contractors Program for Employment Equity - Certification, for each member of the Joint Venture.

5.2.3 Additional Certifications Precedent to Contract Award

5.2.3.1 General Environmental Criteria Certification

The Bidder must select and complete one of the following two certification statements.

A) The Bidder certifies that the Bidder is registered or meets ISO 14001.

_____ _____
Bidders’ Authorized Representative Signature Date

or

B) The Bidder certifies that the Bidder meets and will continue to meet throughout the duration of the contract, a minimum of four (4) out of six (6) criteria identified in the table below.

The Bidder must indicate which four (4) criteria, as a minimum, are met.

Green Practices within the Bidders’ organization	Insert a checkmark for each criterion that is met
Promotes a paperless environment through directives, procedures and/or programs	
All documents are printed double sided and in black and white for day to day business activity unless otherwise specified by your client	
Paper used for day to day business activity has a minimum of 30% recycled content and has a sustainable forestry management certification	
Utilizes environmentally preferable inks and purchase remanufactured ink cartridges or ink cartridges that can be returned to the manufacturer for reuse and recycling for day to day business activity.	
Recycling bins for paper, newsprint, plastic and aluminum containers available and emptied regularly in accordance with local recycling program.	
A minimum of 50% of office equipment has an energy efficient certification.	

_____ _____
Bidders’ Authorized Representative Signature Date

PART 6 - RESULTING CONTRACT CLAUSES

The following clauses and conditions apply to and form part of any contract resulting from the bid solicitation.

6.1 Security Requirements

There is no security requirement applicable to the Contract.

6.2 Statement of Work - Contract

The Work to be performed is detailed under Annex “A” – Statement of Work for Free Flow Repair and Overhaul of Mobile heaters and Annex “B” - Logistics Statement of Work Tactical Mobile Heaters and Related Equipment for Repair and Overhaul.

Special Investigation and Technical Studies (SITS), Technical Investigation and Engineering Support (TIES), Field Services Representatives (FSR), and Mobile Repair Parties (MRPs will be authorized using DND’s Task Authorization policy.

The Work includes, but is not limited to, repair and overhaul, handling, repairing, overhauling, modifications, configuration management, technical data management, integrated logistics support and maintenance support services. The work will be completed on an “as and when requested” basis.

6.2.1 Work Categories

The Work is summarized into two (2) mains categories as follows:

6.2.1.1 Category 1 (free Flow Components) consists of free flow components for R&O, on an “as and when required basis”. It includes certain modifications to the equipment or system as requested, which may include a new substitute part due to obsolescence, or updating an early configuration to the Original Equipment Manufacturers (OEM) current baseline standard.

Authorization for work described as Repair and Overhaul must be in accordance with Annex “A” Statement for Repair and Overhaul of Field Heaters and Annex “B” Logistics Statement of Work.

6.2.1.2 Category 2 (Tasks, Parts/Material) consist of all other tasks, on an “as and when required basis”, including TIES, FSR, MRP and SITS, upgrade and urgent parts.

The Work or a portion of the Work to be performed under the Contract will be on an “as and when requested basis” using a Task Authorization (DND 626). The work described in the Task Authorization must be in accordance with the scope of the contract. The Procurement Authority will sign off all Task Authorizations.

6.2.2 Repairs

The Contractor shall repair and overhaul only those items for which they have received authorization in accordance with the relevant section of A-LM-184-001/JSA-001 and as detailed in Annex A. The Contractor shall also conform to the direction contained in A-LM-184-001/JSA-001 as applicable and such other supply procedures as may be advised from time to time in the demanding, handling, packaging, storing, shipping and recording, etc. of the DND equipment and stores in his possession. Repair/overhaul priorities will be maintained as per information provided in the Section Notice and Priority Summary (SNAPS).

6.3. Special Investigation and Technical Studies (SITS), Technical Investigation and Engineering Support (TIES), Field Service representatives (FSR) and Mobile Repair Party (MRP)

Services on an “as-and-when required basis” in accordance with this Contract and the attached SOW. Such services shall be authorized by the Purchasing Authority (PA) only. Such authorization shall be via the issue of a duly executed Requisition on a Contract using form DND 626. This document will be prepared by the Technical Authority (TA) on the basis of work schedules and budget agreed to between the Contractor, its subcontractors and the TA. A SOW defining the tasks shall be forwarded to the PA for authorization and forwarding to the Contractor.

Each DND 626 tasking will authorize the funds, estimated by the PA in consultation with the Contractor, necessary for the completion of the specific task. These authorized funds will include reasonable and proper travel and living expenses when necessary and authorized.

If at any time during the work it becomes evident that the authorized level of expenditures will be exceeded, the Contractor shall immediately submit a revised funding estimate to the PA. When expenditures reach the authorized level of the DND 626, the Contractor shall stop work and await further instructions from the PA. Under NO circumstances shall the authorized level of the DND 626 be exceeded without prior written approval by the PA.

6.4 Task Authorization Process

The Work or a portion of the Work to be performed under the Contract will be on an "as and when requested basis" using a Task Authorization (TA). The Work described in the Task Authorization must be in accordance with the scope of the Contract.

The administration of the Task Authorization process will be carried out by the Procurement Authority. The process includes monitoring, controlling and reporting on expenditures of the contract with task authorizations to the Contracting Authority.

6.4.1 Task Authorization Process

1. The Procurement Authority (PA) will provide the Contractor with a description of the work required using a DND 626, Task Authorization Form.

2. The Task Authorization (TA) will contain the details of the activities to be performed, a description of the deliverables, and a schedule indicating completion dates for the major activities or submission dates for the deliverables. The TA will also include the applicable basis (bases) and methods of payment as specified in the Contract.

3. The Contractor must provide the PA, within ten (10) calendar days of its receipt, the proposed total estimated price for performing the work and a breakdown of that price, established in accordance with the Basis of Payment specified in the Contract.

4. The nature of the Task Authorizations (TA) will determined the next steps as follows:

   i. **For FSR/MRP Tasks, Parts/Materials –** The Procurement Authority will revise the Contractor estimate and will process the TA, and any amendment(s), according to the TA Limit of the contract.

   ii. **For SITS/TIES Tasks –** The Procurement Authority will revise the Contractor estimate and will process the TA. When a task is estimated at more than 50% of the TA Limit, it will have to be revised in collaboration with PWGSC Contracting

Authority, prior to issuance to the Contractor, to ensure conformity with the Contract and to verify if this is the best approach for this requirement. Any amendment to a TA, which affects the scope of the Work and/or brings its total price above 50% of the TA limit, must also be subject to review by the PWGSC Contracting Authority before being issued to the Procurement Authority.

5. Depending on its nature and the degree of certainty of its outcome, the pricing for each task will be establish as follows:

   i. **Firm Price:** Where a firm price can be determined for a Task, the Contractor must complete the work in accordance with this specific firm price. The firm price will represent the total amount payable under the Task Authorization.

   ii. **Ceiling Price:** Where a requirement is not well defined, or is of high risk, but a maximum price envelope can be estimated for a Task, the Contractor must complete the work within that ceiling price. The ceiling price will represent the maximum amount payable for the completion of the Task Authorization. The ceiling price will be subject to downward adjustment based on the actual reasonably incurred in the performance of the work.

   iii. **Limitation of Expenditure;** Where a requirement is not well defined, or is of high risk, and it is not practical to utilize a firm price or a ceiling price, a limitation of expenditure (not to be exceeded) will represent the amount up to which the Contractor will be paid, regardless of the level of completion of the work. The Contractor must not perform any work or services, which could cause the total liability of Canada to exceed the authorized amount, unless an increase is approved by the Contracting Authority and authorized by the Procurement Authority.

6. The Contractor must not commence work until a TA authorized by the PA has been received by the Contractor. The Contractor acknowledges that any work performed before a TA has been received will be done at the Contractor's own risk.

6.4.2 Task Authorization Limit

The Procurement Authority may authorize individual task authorizations up to a limit of $100,000.00, the Applicable Taxes included, inclusive of any revisions.

Any task authorization to be issued in excess of that limit must be authorized by the Contracting Authority before issuance.

6.4.3 Canada's Obligation - Portion of the Work - Task Authorizations

Canada's obligation with respect to the portion of the Work under the Contract that is performed through task authorizations is limited to the total amount of the actual tasks performed by the Contractor.

6.4.4 Periodic Usage Reports – Contracts with Task Authorization

The Contractor must compile and maintain records on its provision of services to the federal government under authorized Task Authorizations issued under the Contract.

The Contractor must provide this data in accordance with the reporting requirements detailed below. If some data is not available, the reason must be indicated. If services are not provided during a given period, the Contractor must still provide a "NIL" report.

The data must be submitted on a quarterly basis to the Procurement Authority and the Contracting Authority.

The quarterly periods are defined as follows:
1st quarter: April 1 to June 30;
2nd quarter: July 1 to September 30;
3rd quarter: October 1 to December 31; and
4th quarter: January 1 to March 31.

The data must be submitted to the Contracting Authority no later than fifteen (15) calendar days after the end of the reporting period.

Reporting Requirement- Details
A detailed and current record of all authorized tasks must be kept for each contract with a task authorization process. This record must contain:

For each authorized task:
(i) the authorized task number or task revision number(s);
(ii) a title or a brief description of each authorized task;
(iii) the total estimated cost specified in the authorized Task Authorization (TA) of each task, GST or HST extra;
(iv) the total amount, GST or HST extra, expended to date against each authorized task;
(v) the start and completion date for each authorized task; and
(vi) the active status of each authorized task, as applicable.

For all authorized tasks:
(i) the amount (GST or HST extra) specified in the contract (as last amended, as applicable) as Canada's total liability to the contractor for all authorized TAs; and
(ii) the total amount, GST or HST extra, expended to date against all authorized Tasks.

TASK AUTHORIZATION REPORT						
Contract Number :						
Reporting Period: _____ to _____						
TA Number	TA Amendment Number	Date of TA / TA Amendment	Value of TA / TA Amendment (GST/ HST excluded)	GST/HST	Value of TA / TA Amendment (GST/HST included)	Cumulative Amount

If the Contractor does not comply with the above reporting requirements, Canada has the right pursuant to the default provisions of the contract, to terminate the contract for default.

6.5 Standard Clauses and Conditions
All clauses and conditions identified in the Contract by number, date and title are set out in the Standard Acquisition Clauses and Conditions Manual (https://buyandsell.gc.ca/policy-and-

guidelines/standard-acquisition-clauses-and-conditions-manual) issued by Public Works and Government Services Canada.

6.5.1 General Conditions
2035 (2018-06-21) General Conditions - Higher Complexity – Services, apply to and form part of the Contract.

6.5.2 Supplemental General Conditions

6.5.2.1 Intellectual Property Rights
4006 (2010-08-16) Contractor to own Intellectual Property Rights in Foreground Information, apply to and form part of the Contract.

6.5.2.2 Warranty
Section 22 entitled Warranty (2014-09-25) of general conditions 2030 (2018-06-21) apply and is amended by deleting subsections 3 and 4 in its entirety and replacing it with the following:

3. The Work or any part of the Work found to be defective or non-conforming will be returned to the Contractor's plant for replacement, repair or making good. However, when in the opinion of Canada it is not expedient to remove the Work from its location, the Contractor must carry out any necessary repair or making good of the Work at that location. In such cases, the Contractor will be responsible for all Costs (including travel and living expenses) incurred in so doing, Canada will not reimburse these Costs.

4. The Contractor must pay the transportation cost associated with returning the Work or any part of the Work to the Contractor's plant pursuant to subsection 3. The Contractor must also pay the transportation cost associated with forwarding the replacement or returning the Work or part of the Work when rectified to the delivery point specified in the Contract or to another location directed by Canada.

All other provisions of the warranty section remain in effect.

6.6 Term of Contract

6.6.1 Period of the Contract
The period of the Contract is for two (2) years from date of Contract award.

6.6.2 Option to Extend the Contract
The Contractor grants to Canada the irrevocable option to extend the term of the Contract by up to three (3) additional one (1) year period(s) under the same conditions. The Contractor agrees that, during the extended period of the Contract, it will be paid in accordance with the applicable provisions as set out in the Basis of Payment.

Canada may exercise this option at any time by sending a written notice to the Contractor at least thirty (30) calendar days before the expiry date of the Contract. The option may only be exercised by the Contracting Authority, and will be evidenced for administrative purposes only, through a contract amendment.

6.6.3 Termination – Business Volume
Notwithstanding any other termination clauses referred to in this contract, if the business volume of repairs and overhauls is less than $50,000.00 per fiscal year (from April 1 to march 31),

Canada may at its sole discretion terminate the Contract. Such a termination will be at no cost to Canada and the Contractor shall have no claim for damages, compensation, loss of profit, allowance or otherwise directly or indirectly arising out of the termination. Canada shall pay in accordance with the Contract for all work in progress at the time of termination under this section.

6.7 Authorities

6.7.1 Contracting Authority

The Contracting Authority for the Contract is:

Michel Boyer, Supply Specialist
Public Works and Government Services Canada
Acquisitions Branch, Commercial & Alternative Acquisitions Management Sector
Logistics, Electrical, Fuel & Transportation Directorate
Fuel & Construction Products Division (HL)
140 O'Connor Street, 4191, Tower East 4th Floor
Ottawa, ON K1A 0R5
Telephone: 613-295-9383 Facsimile: 613-943-7620
E-mail address: michel.boyer@tpsgc-pwgsc.gc.ca

The Contracting Authority is responsible for the management of the Contract and any changes to the Contract must be authorized in writing by the Contracting Authority. The Contractor must not perform work in excess of or outside the scope of the Contract based on verbal or written requests or instructions from anybody other than the Contracting Authority.

6.7.2 Procurement Authority

The Procurement Authority for the Contract is:

Name: _____
Title: _____
Organization: _____
Address: _____
Telephone : ___ ___ _____
Facsimile: ___ ___ _____
E-mail address: _____

The Procurement Authority is the representative of the department or agency for whom the Work is being carried out under the Contract. The Procurement Authority is responsible for the implementation of tools and processes required for the administration of the Contract. The Contractor may discuss administrative matters identified in the Contract with the Procurement Authority however the Procurement Authority has no authority to authorize changes to the scope of the Work. Changes to the scope of Work can only be made through a contract amendment issued by the Contracting Authority.

6.7.3 Technical Authority

The Technical Authority for the Contract is:

Name: _____
Title: _____
Organization: _____
Address: _____
Telephone: ___-___-____
Facsimile: ___-___-____
E-mail: _____

The Technical Authority named above is the representative of the department or agency for whom the Work is being carried out under the Contract and is responsible for all matters concerning the technical content of the Work under the Contract. Technical matters may be discussed with the Technical Authority, however the Technical Authority has no authority to authorize changes to the scope of the Work. Changes to the scope of the Work can only be made through a contract amendment issued by the Contracting Authority.

6. 7.4 Quality Assurance Authority:
All work is subject to Government Quality Assurance performed at the Contractor's or subcontractor's facility, and at the installation site, by the Director of Quality Assurance, or its designated Quality Assurance Representative (QAR).

The Quality Assurance Authority for the Contract is: *(To be completed by PWGSC)*

Director General Material Systems and Supply Chain – DGMSSC
Director of Quality Assurance
National Defence Headquarters
MGen. George R. Pearkes Building
101 Colonel By Drive
Ottawa, ON K1A 0K2
DQA 4-3
Telephone: ___-___-____
Facsimile: ___-___-____
E-mail: _____

6.7.5 Contractor's Representative
Name and telephone number of the person responsible for:

The Contractor shall notify the authorities of any changes to this information for the duration of the contract.

	General Enquiries	**Delivery Follow-up**
Name:	_____	_____
Telephone No.:	_____	_____
Facsimile No.:	_____	_____
E-mail address:	_____	_____

6.8 Payment

6.8.1 Basis of Payment –
As detailed in Annex “C” – Basis of Payment and Price Schedule

6.8.2 Limitation of Expenditure

1. Canada's total liability to the Contractor under the Contract must not exceed $1,700,000.00. Customs duties are included and Applicable Taxes are extra.

2. No increase in the total liability of Canada or in the price of the Work resulting from any design changes, modifications or interpretations of the Work, will be authorized or paid to the Contractor unless these design changes, modifications or interpretations have been approved, in writing, by the Contracting Authority before their incorporation into the Work. The Contractor must not perform any work or provide any service that would result in Canada's

total liability being exceeded before obtaining the written approval of the Contracting Authority. The Contractor must notify the Contracting Authority in writing as to the adequacy of this sum:

a. when it is 75% committed, or
b. four months before the contract expiry date, or
c. as soon as the Contractor considers that the contract funds provided are inadequate for the completion of the Work,
d. whichever comes first.

3. If the notification is for inadequate contract funds, the Contractor must provide to the Contracting Authority a written estimate for the additional funds required. Provision of such information by the Contractor does not increase Canada's liability.

6.9 Method of Payment

6.9.1 Method of Payment for Free Flow R&O

SACC Manual clause H1001C (2008-05-12) Multiple Payments

6.9.2 Method of Payment for Work Performed Under Task Authorization

SACC Manual clause H1008C (2008-05-12) Monthly Payments

6.10 SACC Manual Clauses

THE FOLLOWING TERMS AND CONDITIONS ARE INCORPORATED HEREIN

SACC Reference	Section	Date
C0307C	Cost Submission – Repair and Overhaul	2014-06-26
C0705C	Discretionary Audit	2010-01-11
C0711C	Time Verification	2008-05-12
C2608C	Canadian Customs Documentation	2015-02-25
C2800C	Priority Rating	2013-01-28
C2801C	Priority Rating – Canadian-based Contractors	2017-08-17

6.11 T1204 - Information Reporting by Contractor

1. Pursuant to paragraph 221 (1)(d) of the Income Tax Act, R.S. 1985, c.1 (5th Supp.), payments made by departments and agencies to contractors under applicable services contracts (including contracts involving a mix of goods and services) must be reported on a T1204 Government Service Contract Payments slip.
2. To enable departments and agencies to comply with this requirement, the Contractor must provide the following information within 30 calendar days following contract award:

   (a) the legal name of the Contractor, i.e. the legal name associated with its business number or Social Insurance Number (SIN), as well as its address and postal code;
   (b) the status of the Contractor, i.e. an individual, a sole proprietorship, a corporation, or a partnership;
   (c) the business number of the Contractor if the Contractor is a corporation or a partnership and the SIN if the Contractor is an individual or a sole proprietorship. In the case of a partnership, if the partnership does not have a business number, the partner who has signed the Contract must provide its SIN;
   (d) in the case of a joint venture, the business number of all parties to the joint venture who have a business number or their SIN if they do not have a business number.

3. The information must be sent to the person and address specified below. If the information includes a SIN, the information should be provided in an envelope marked "PROTECTED".

Name of person: **Procurement Authority**
Address: National Defense Headquarters
Mgen George R. Pearkes Building
101 Colonel By Drive
Ottawa, ON., K1A 0K2
Attn: DLP 6-3-2
Fax: 819-939-0822

6.12 Electronic Payment of Invoices – Contract

The Contractor accepts to be paid using any of the following Electronic Payment Instrument(s):

a. Visa Acquisition Card;
b. MasterCard Acquisition Card;
c. Direct Deposit (Domestic and International);
d. Electronic Data Interchange (EDI);
e. Wire Transfer (International Only);
f. Large Value Transfer System (LVTS) (Over $25M)

6.13 Capability

The Contractor shall formally advise the Contracting Authority, in writing, of any loss or anticipated loss of capability to perform any or all of the services stipulated in the contract.

6.14 Volume of Work

The basis of payment in the Contract, including the rates and prices, must remain in force notwithstanding any variation between the volume of work upon which those rates are based and the volume of work actually received by the Contractor. Further, the Contractor may not claim from Canada any under recovery of fixed overhead expenses as a result of reduced business volume.

6.15 Certifications and Additional Information

6.15.1 Compliance

Unless specified otherwise, the continuous compliance with the certifications provided by the Contractor in its bid or precedent to contract award, and the ongoing cooperation in providing additional information are conditions of the Contract and failure to comply will constitute the Contractor in default. Certifications are subject to verification by Canada during the entire period of the Contract.

6.15.2 Federal Contractors Program for Employment Equity - Default by the Contractor

The Contractor understands and agrees that, when an Agreement to Implement Employment Equity (AIEE) exists between the Contractor and Employment and Social Development Canada (ESDC)-Labour, the AIEE must remain valid during the entire period of the Contract. If the AIEE becomes invalid, the name of the Contractor will be added to the "FCP Limited Eligibility to Bid" (https://www.canada.ca/en/employment-social-development/programs/employment-equity/federal-contractor-program.html#s4) list. The imposition of such a sanction by ESDC will constitute the Contractor in default as per the terms of the Contract.

6.16 Applicable Laws

The Contract must be interpreted and governed, and the relations between the parties determined, by the laws in force in _____.

6.17 Licensing

The Contractor shall obtain and maintain all permits, licenses and certificates of approval for the Work to be performed under any applicable federal, provincial or municipal legislation. The Contractor shall be responsible for any charges imposed by such legislation or regulations. Upon request, the Contractor shall provide a copy of such permit, license, or certificate to Canada.

6.18 Design Change, Deviation and Waiver Procedures

The Design Change, Deviation and Waiver Procedures as defined in Clause B5001C and National Defence Standard D-02-06-008/SG001 shall apply to this contract.

The Contractor must complete Part 1 of the Design Change/Deviation form DND 672 and forward one (1) copy to the Technical Authority and one (1) copy to the Contracting Authority.

The Contractor will be authorized to proceed upon receipt of the design change/deviation form signed by the Contracting Authority. A contract amendment will be issued to incorporate the design change/deviation in the Contract.

6.19 Establishment, Contractor's

The Contractor shall permit free access to its establishment and those of its subcontractors to authorized representatives of Canada, as necessary for the performance of their duties as it relates to the Contract.

6.20 Urgent Requirements – Priority Repair Requests (PRR)

The Contractor shall take immediate action to satisfy urgent requirements of the Department of National Defence (DND), as and when required by the Procurement Authority, provided however, that if such requirements do not comply with the nature of the work set out in this requirement, or involve a commitment in excess of the financial limitations of the contract, the Contractor shall first obtain the authorization in writing of the Contracting Authority.

6.21 Unsatisfactory Condition Reports (UCR's)

Upon mutual agreement, the Contractor will be required to investigate and make recommendations on Unsatisfactory Condition Reports (UCR's) submitted by the appropriate DND authority. The Contractor may be required to originate UCR's in accordance with CFTO C-02-015-001/AG-000.

6.22 Performance and reliability

Equipment repaired or overhauled in accordance with the terms of this contract will be produced to meet the standards of performance and reliability described in applicable engineering orders and test sheets.

When such standards are not described or when the standards described are considered by the Contractor to be inadequate, the Contractor will submit the standard of performance and reliability to which he proposes to repair/overhaul the equipment through the Quality Assurance representative (QAR) to the Technical Authority for DND.

6.23 Inspections/Tests

The Contractor is responsible for performing, or having performed, all inspections and tests necessary to substantiate that the material or services provided conform to the contract requirements.

The Contractor shall provide, at no additional cost to the price of the contract, all applicable test data, all contractor technical data, test pieces and samples as may reasonably be required by the QAR to verify conformance to contract requirements. The Contractor shall forward at his expense such technical data, test data, test pieces and samples to such location as the QAR may direct.

Quality Control, Inspection and test records that substantiate conformance to the specified requirements, including records of corrective actions, shall be retained by the Contractor for three (3) years from the date of completion or termination of Contract and shall be made available to the QAR upon request.

6.24 Drawings, Reports, Data

All drawings, reports, data, documents or materials produced by the Contractor in providing the specified services shall become the Property of Canada and shall be delivered to the NDHQ TA, and shall not be released to any person or agency without express permission of the TA.

6.25 Equipment Turn Around Time (TAT)

Repair priority is governed by the Selection Notice and Priority Summary (SNAPS). Canada expects equipment TAT to a serviceable state to be achieved in ninety (90) calendar days. TAT is defined in Annex “B” section 7.2. The TAT is calculated from the date a repairable item is received at the Contractor’s facilities, to the date on which the repairable item is made fully serviceable, quality assurance is performed, and transportation arrangements have been made for return shipment. The principle of first-in/first-out (FIFO) must be observed whenever possible.

6.26 Warranty

The equipment that is repaired or overhauled will be standard warranty for one year from the date it leaves the Contractor’s plant.

6.27 Priority of Documents

If there is a discrepancy between the wording of any documents that appear on the list, the wording of the document that first appears on the list has priority over the wording of any document that subsequently appears on the list.

(a) the Articles of Agreement;
(b) 2035 General Conditions – Higher Complexity – Services (2018-06-21);
(c) 4006 Supplemental General Conditions (2010-08-16);
(d) Annex “A” – Statement of Work for Free Flow Repair and Overhaul of Field Heaters;
(e) Annex “B” – Logistics Statements of Work Repair and Overhaul of Field Heaters;
(f) Annex “C” - Pricing Schedule; and
(g) the Contractor's bid dated _____ ***(To be inserted by PWGSC)***

6.28 Defence Contract

SACC Manual clause A9006C (2012-07-16) Defence Contract

6.29 SACC Manual Clauses

The following terms and conditions are incorporated herein

SACC Reference	Section	Date
A1009C	Work Site Access	2008-05-12
A9019C	Hazardous Waste Disposal	2011-05-16
A9131C	Controlled Goods Program	2014-11-27
A9062C	Canadian Forces Site Regulations	2011-05-16
B4019C	United States Military Specifications and Standards	2015-02-25
B4060C	Controlled Goods	2011-05-16

B8044C	Mobile Repair Parties	2007-05-25
D2025C	Wood Packaging Material	2017-08-17
D3015C	Dangerous Goods/Hazardous Products – Labelling and Packaging Compliance	2014-09-25
D5510C	Quality Assurance Authority (DND) - Canadian-based Contractor ***NOTE***: *The PA, TA, and the QAR may delegate their authority and may act through their duly appointed representatives.*	2017-08-17
D5515C	Quality Assurance Authority (DND) - Foreign-based and United States Contractor ***NOTE***: *The PA, TA, and the QAR may delegate their authority and may act through their duly appointed representatives.*	2010-01-11
D5540C	ISO 9001:2008 Quality Management Systems - Requirements (QAC Q)	2010-08-16
D5604C	Release Documents (DND) - Foreign-based Contractor	2008-12-12
D5605C	Release Documents (DND) - United States-based Contractor	2010-01-11
D5606C	Release Documents (DND) - Canadian-based Contractor	2017-11-28
D6010C	Palletization	2007-11-30
D9002C	Incomplete Assemblies	2007-11-30
G1005C	Insurance – No Specific Requirement	2016-01-28
L5001C	Surplus Government Property	2008-05-12

6.30 Invoicing Instructions

6.30.1 Invoicing Instructions – Free Flow R & O

The Contractor must submit invoices in accordance with the section entitled “Invoice Submission” of the general conditions. Invoices cannot be submitted until all work identified in the invoice is completed.

The Contractor is requested to provide invoices in electronic format unless otherwise specified by the Contracting Authority or Procurement Authority, thereby reducing printed material.

The Contractor must submit invoices on its own form, and must include the following information:

a. Date
b. Name and address of the consignee(s)
c. Contract number, serial number and financial codes
d. Details of items being repaired, including:
    - NSN
    - Item number, part number, reference number and description of the item
    - Maximum Repair Cost (MRC)
    - Labour hours
    - Material costs
    - Subcontractor cost
    - Contractor’s work order numbers
    - DND’s work order number
    - DND’s work authorization date (contract price period)
    - Quantity, device type, manufacturer and serial number
e. Rate of payment applicable to the labour hours
f. Engineering or technical support categories
g. Supporting documentation such as, but not limited to, detailed copies of subcontractor, waybill and material/parts invoices, copies of travel, hotel, car rental and airline receipts

6.30.2 Invoicing Instructions - Task Authorization

The Contractor must submit invoices in accordance with the section entitled “Invoice Submission” of the general conditions. Invoices cannot be submitted until all work **identified in the invoice is completed.**

The Contractor is requested to provide invoices in electronic format unless otherwise specified by the Contracting Authority or Procurement Authority, thereby reducing printed material.

The Contractor must submit invoices on its own form, and must include the following information:

a. Date
b. Name and address of the consignee(s)
c. Contract number, serial number and DND financial coding
d. Task Authorization Number
e. Rate of payment applicable to the labour hours
f. Engineering or technical support categories
g. Labour hours

h. Cost of materials related to the Task
i. Approved travel and living expenses (receipts required)
j. Cost of subcontractor related to the task
k. Supporting documentation such as, but not limited to, detailed copies of subcontractor, waybill and material/parts invoices, copies of travel, hotel, car rental and airline receipts

6.30.3 Distribution of Invoices

Invoices must be distributed as follows:

a. The original must be forwarded or e-mailed to the Procurement Authority identified under the section entitled “Authorities” of the Contract.
b. One (1) copy must be forwarded or e-mailed to the Contracting Authority identified under the section entitled “Authorities” of the Contract.

Note: any credit notes (spares, scrap material) with supporting documentation must be shown as a credit on the invoice.

6.31 Release Documents – Distribution

The Contractor must prepare the release documents in a current electronic format and distribute the as follows.

a. One (1) copy mailed to consignee marked “Attention: Receipts Officer”;
b. Two (2) copies with shipment (in a waterproof envelope) to the consignee;
c. One (1) copy to the Contracting Authority;
d. One (1) copy to:
National Defence Headquarters
MGen Georges R. Pearkes Building
101 Colonel By Drive
Ottawa, ON K1A 0K2
Attention: DLP 6-3-2
e. One (1) copy to the Quality Assurance Representative;
f. One (1) copy to the Contractor.
g. For all non-Canadian contractors, one (1) copy to:
DQA/Contract Administration
National Defence Headquarters
Mgen George R. Pearkes Building
101 Colonel By Drive
Ottawa, ON K1A OK2
E-mail: ContractAdmin.DQA@forces.gc.ca

6.32 Identification Markings Repair and Overhaul

All equipment assemblies or components, after overhaul or reconditioning shall have the original marking information restored and shall have the following information added immediately adjacent to the original identification markings or previous reconditioning markings:

a. reconditioner's Identification;
b. date of Reconditioning; and
c. work order number.

6.33 Preparation for Delivery

Preparation for delivery shall be in accordance with Annex “A” and Annex “B”. All equipment shall leave the contractor’s facility in such condition as to prevent in-transit damage while being returned to the Canadian Forces. See Wood Packaging Clause.

6.34 Shipping Instructions (Department of National Defence) - Foreign-based Contractors

1. Delivery will be FCA Free Carrier at the Contractor's facility Incoterms 2000. The Contractor must load the goods onto the carrier designated by the Department of National Defence (DND). Onward shipment from the delivery point to the consignee will be Canada's responsibility.
2. Before shipping the goods, the Contractor must contact the following DND Inbound Logistics Coordination Center by facsimile or e-mail, to arrange for shipment, and provide the information detailed at paragraph 3.

***Instruction to contracting officers**: Before contract award, choose either shipping option (a), (b), (c), or (d), and delete the unused options and this instruction.*

a. *Insert the following when the Contractor is located in the United States (U.S.):*
Inbound Logistics Coordination Center (ILCC):
Telephone: 1-877-447-7701 (toll free)
Facsimile: 1-877-877-7409 (toll free)
E-mail: ILHQOttawa@forces.gc.ca

OR

b. *Insert the following when the Contractor is located in United Kingdom (UK) and Ireland*:
Inbound Logistics United Kingdom (ILUK):
Telephone: 011-44-1895-613023, or 011-44-1895-613024, or
Facsimile: 011-44-1895-613046
E-mail: CFSUEDetUKMovements@forces.gc.ca

In addition, the Contractor must send to ILUK the completed form "Shipping Advice and Export Certificate" by e-mail to: CFSUEDetUKMovements@forces.gc.ca.

The shipment of any items above the value of 600 GBP (pound sterling) being exported from the United Kingdom and Ireland will be cleared by DND using Her Majesty's Customs & Excise (HMCE) New Export Systems (NES). The Contractor must comply with HMCE requirements by registering with HMCE or by having a freight forwarder complete the entry. A printed copy of the NES entry Export Declaration clearly displaying the Declaration Unique Consignment Reference Number must be provided by the Contractor and attached to the consignment. The Contractor must ensure that this procedure is carried out for all stores whether they be initial purchase or repair and overhaul export items. HMCE will authorize Canadian Forces Support Unit (Europe) to ship the goods only if the procedure has been adhered to completely and properly by the Contractor. **Note:** To ensure you receive a reply on any contracting information such as Incoterms etc, always include the e-mail address: ILHQOttawa@forces.gc.ca in carbon copy (cc).

OR

c. *Insert the following when the Contractor is located in a country other than Canada, the U.S., the UK and Ireland:*
Inbound Logistics Europe Area (ILEA):
Telephone: +49-(0)-2203-908-1807 or 2748 or 5304
Facsimile: +49-(0)-2203-908-2746
Email: ILEA@forces.gc.ca
Note: To ensure you receive a reply on any contracting information such as Incoterms etc, always include the e-mail address: ILHQOttawa@forces.gc.ca in carbon copy (cc).

OR

d. *Insert the following for U.S. Foreign Military Sales (FMS):*
Inbound Logistics Coordination Center (ILCC):
Telephone: 1-877-447-7701 (toll free)
Facsimile: 1-877-877-7409 (toll free)
Email: ILHQOttawa@forces.gc.ca

Canada is responsible for the carrier selection for shipments of the goods supplied under this FMS contract. Instructions on how to obtain carrier selection from Canada are contained in U.S. Department of Defense 4000.25-8-M, Military Assistance Program Address Directory, and Canadian Special Instructions Indicator (SII). The Contractor must not ship the goods until the SII has been complied with.

***Instruction to contracting officers**: Insert the following paragraphs 3 through 7 with all options above, except (d) - U.S. FMS, and delete this instruction.*

3. The Contractor must provide the following information to the DND Inbound Logistics contact when arranging for shipment:
   a. the Contract number;
   b. consignee address (if multiple addresses, items must be packaged and labeled separately with each consignee address);
   c. description of each item;
   d. the number of pieces and type of packaging (e.g. carton, crate, drum, skid);
   e. actual weight and dimensions of each piece type, including gross weight;
   f. copy of the commercial invoice (in accordance with clause C2608C, section 4, of the Standard Acquisition Clauses and Conditions Manual) or a copy of the Canada Border Services Agency form CI1 Canada Customs Invoice (PDF 429KB) - (Help on File Formats);
   g. Schedule B codes (for exports) and the Harmonized Tariff Schedule codes (for imports);
   h. North American Free Trade Agreement Certificate of Origin (in accordance with clause C2608C, section 2) for the U.S. and Mexico only;
   i. full details of dangerous material, as required for the applicable mode of transportation, signed certificates for dangerous material as required for shipment by the International Maritime Dangerous Goods Code, or International Air Transport Association regulations or the applicable Canadian Dangerous Goods Shipping Regulations and a copy of the safety data sheet.
4. Following receipt of this information by Canada, Canada will provide the appropriate shipping instructions, which may include the requirement for specific consignee address labelling, the marking of each piece with a Transportation Control Number and customs documentation.
5. The Contractor must not ship goods before receiving shipping instructions from the DND Inbound Logistics contact.
6. If the Contractor delivers the goods at a place and time that are not in accordance with the given delivery instructions or fail to fulfill reasonable delivery instructions given by Canada, the Contractor must reimburse Canada any additional expenses and costs incurred.
7. If Canada is responsible for delays in delivering the goods, ownership and risk will be transferred to Canada upon expiry of either 30 days following the date on which a duly completed shipping application is received by Canada or by its appointed forwarding agent, or 30 days following the delivery date specified in the Contract, whichever is later.

6.35 Shipping Instructions (DND) - Canadian-based Contractor

1. Delivery will be FCA Free Carrier at Contractor's facility Incoterms 2000. The Contractor must load the goods onto the carrier designated by the Department of National Defence (DND). Onward shipment from the delivery point to the consignee will be Canada's responsibility.
2. Before shipping the goods, the Contractor must contact the following DND Inbound Logistics Coordination Center by facsimile or e-mail, to arrange for shipment, and provide the information detailed at paragraph 3.

***Instruction to contracting officers**: Before contract award, choose either shipping option (a), (b, (c), (d), or (e), and delete the unused options and this instruction.*

a. *Insert the following for all sole source contracts, except repair and overhaul, where the Contractor is located in Canada*:

Inbound Logistics Co-ordination Center (ILCC)
Telephone: 1-877-877-7423 (toll free)
Facsimile: 1-877-877-7409 (toll free)
E-mail: ILHQOttawa@forces.gc.ca

b. *Insert the following for all repair and overhaul contracts where the Contractor is located between Kingston inclusive and westward to the Ontario/Manitoba border*:
Inbound Logistics Central Area (ILCA)
Telephone: 1-866-371-5420 (toll free)
Facsimile: 1-866-419-1627 (toll free)
E-mail: ILCA@forces.gc.ca

c. *Insert the following for all repair and overhaul contracts where the Contractor is located in Manitoba, Saskatchewan, Alberta, British Columbia, and the National Capital Region inclusive to east of Kingston*:
Inbound Logistics Coordination Center (ILCC)
Telephone: 1-877-877-7423 (toll free)
Facsimile: 1-877-877-7409 (toll free)
E-mail: ILHQOttawa@forces.gc.ca

d. *Insert the following for all repair and overhaul contracts where the Contractor is located in Quebec*:
Inbound Logistics Quebec Area (ILQA)
Telephone: 1-866-935-8673 (toll free), or
1-514-252-2777, ext. 4673, 2852
Facsimile: 1-866-939-8673 (toll free), or
1-514-252-2911
E-mail: 25DAFCTrafficQM@forces.gc.ca

e. Insert the following for all repair and overhaul contracts where the Contractor is located in Atlantic (New Brunswick, Prince Edward Island, Nova Scotia, Newfoundland and Labrador):
Inbound Logistics Atlantic Area (ILAA)
Telephone: 1-902-427-1438
Facsimile: 1-902-427-6237
E-mail: BlogILAA@forces.gc.ca

3. The Contractor must provide the following information to the DND Inbound Logistics Coordination Center when arranging for shipment:
   a. the Contract number;
   b. consignee address (for multiple addresses, items must be packaged and labelled separately with each consignee address);
   c. description of each item;
   d. the number of pieces and type of packaging (i.e., carton, crate, drum, skid);
   e. actual weight and dimensions of each piece type, including gross weight;
   f. full details of dangerous goods/hazardous products, as required for the applicable mode of transportation, signed certificates for dangerous goods/hazardous products as required for shipment by the International Maritime Dangerous Goods Code, the International Air Transport Association regulations or the applicable Canadian *Transportation of Dangerous Goods Regulations*, and a copy of the safety data sheet in English and French.
4. Following receipt of this information by Canada, Canada will provide the appropriate shipping instructions, which may include the requirement for specific consignee address labelling, and the marking of each piece with a Transportation Control Number.
5. The Contractor must not ship the goods before receiving shipping instructions from the DND Inbound Logistics contact.

6. If the Contractor delivers the goods at a place and time which are not in accordance with the given delivery instructions or fail to fulfill reasonable delivery instructions given by Canada, the Contractor must reimburse Canada any additional expenses and costs incurred.
7. If Canada is responsible for delays in delivering the goods, ownership and risk will be transferred to Canada upon expiry of either 30 days following the date on which a duly completed shipping application is received by Canada or by its appointed forwarding agent, or 30 days following the delivery date specified in the Contract, whichever is later.

ANNEX "A"

STATEMENT OF WORK FOR FREE FLOW REPAIR AND OVERHAUL OF FIELD HEATERS

1 SCOPE

1.1 Purpose

The Department of National Defence (DND) has a requirement for Repair and Overhaul (R&O) services to be performed on field heaters and related equipment positioned throughout Canada and at operational sites. This Statement of Work (SOW) defines the work effort required to perform R&O functions. The R&O functions include, but are not limited to, handling, repairing, overhauling, modifications, configuration management, technical data management, integrated logistics support and maintenance support. The equipment included in this SOW is listed in TABLE 1:

Table 1: Equipment to be Repaired and Overhauled

ITEM	NSN	DESCRIPTION
1	4520-20-006-2964	Heater, Duct Type, DEW Model 1176756, 100,000 BTU/HR
2	4520-20-007-2055	Heater Water, Portable, DEW Model
3	4520-21-886-2954	Heater, Space, Camfire Model MV125CG, 87,000 BTU/Hr
4	4520-01-550-7748	Heater, Space, Camfire Model MV125DND, 87,000 BTU/Hr
5	4520-21-911-9025	Heater, Space, Herman Nelson BT 400-80, 400 K BTU/Hr
6	2815-01-102-3172	Engine, Diesel, Hatz, Part Number 1B30 (used in Herman Nelson Space Heater Model BT 400-80)
7	4420-01-104-0264	Heat Exchanger, Warner Robins Air Logistics Center, Part Number 9138138 (used in Herman Nelson Space Heater Model BT 400-80)

Note to Table 1: Canadian Forces (CF) data descriptions of this equipment and graphic representations are included in Attachment A2 Technical Publications.

1.2 Background

DND has approximately 3500 space heaters (110 space heaters of which are the Herman Nelson Space Heater Model BT 400-80) and 600 water heaters that periodically require R&O services in an expeditious manner to improve serviceability, reliability, safety and functionality.

2 APPLICABLE DOCUMENTS

2.1 Applicability

2.1.1 Order of Precedence

The following documents form part of this SOW to the extent specified herein. In the event of a conflict between the text of this SOW, Annex B and the references stated herein, this SOW must take precedence.

2.1.2 Discrepancies

The contractor must notify the Technical Authority (TA) of any discrepancies discovered between the referenced documents, this SOW, and the equipment undergoing repair and overhaul. If the discrepancies jeopardize the completion of the R&O work, they must be dealt with on a priority basis. The documents referenced in Table 2 may be provided to the contractor and may be used in their entirety for equipment familiarization information. Repair part numbers contained in the documents may not be current, and it is the contractor's responsibility to verify all parts information.

2.2 Publications

2.2.1 Government Furnished Publications

Table 2: Applicable Reference Documents

ITEM	DOCUMENT NO.	DESCRIPTION	ISSUE
1 NSN 4520-20-006-2964	C-91-996-000/MB-001	Operator's Manual	Sept 2014
	C-91-996-000/MS-001	Maintenance Manual	Oct 2014
	C-91-996-000/MX-001	Heater Duct Type, Portable, 100,000 BTU, Polarthem	Dec 2013
	C-91-996-000/MY-001	Parts Identification List Manual	Sept 2014
	C-91-996-000/NP-001	Permissive Repair Schedule and Standard Repair Times Manual	Mar 2013
2 NSN 4520-20-007-2055	C-91-997-000/MB-001	Operator's Manual	-
	C-91-997-000/MS-001	Maintenance Manual	May 2014
	C-91-997-000/MX-000	Illustrated Repair Parts Manual and Scales – Water Heater Portable	June 2014
	C-91-997-000/MY-001	Parts Identification List Manual	-
	C-91-997-000/NP-001	Permissive Repair Schedule and Standard Repair Times Manual	-
3 and 4 NSN 4520-21-886-2954 NSN 4520-01-550-7748	C-91-146-000/MS-001	Camfire MV125CG - Portable Duct Heater - Operation - Service - Technical Support 1-877-226-3473	Nov 2002
	C-91-146-000/MX-001	Heater, Duct Type Portable (87000 BTU) NSN 4520-21-886-2954	-
	C-91-146-000/MY-001	Camfire Heater Model MV125CG MOD B - Portable Duct Heater NSN 4520-21-866-2954 - Operating, Maintenance &	May 1997
	C-91-146-000/CF-001	Modification Instruction, Electrical Control Box	-
5 NSN 4520-21-911-9025	C-91-153-000/MS-000	Technical Manual Operations and Maintenance with -Parts Breakdown BT400-80 Portable Diesel Heater	Jan 1995
	C-91-153-000/CF-001	Modification Instruction – Modification to Fuel System	Apr 1998
	C-91-153-000/CF-002	Mod Instruction for BT400 Valve Replacement Kits	-
All	A-LM-184-001/JS-001	Special Instructions for: Repair and Overhaul Contractors	Jan 2016
All	D-01-400-01/SG-000	Engineering Drawing Practices for Level 3 Drawings and Technical Data Lists	Jul 1979

2.2.2 Other Publications

ISO 14001 Environmental Management Systems
OHSMS 18001 Occupational Health and Safety Management System

3 REPAIR AND OVERHAUL DEFINITIONS

3.1 The term "repair" is defined as:

Corrective maintenance activity which restores an item to serviceable condition by identifying, correcting faults or replacing pieces of the item with new, reconditioned, overhauled or rebuilt components. Repair Work will be initiated by the unit/end user.

3.1.1 Third Level Repair

Third level repair must include any associated first and/or second level repairs, adjustment or part replacement and any procedures needed to make the item serviceable.

3.2 The term 'overhaul' is defined as:

The restoration of an item to its original condition and life expectancy. It includes the replacement of worn, damaged or life expired parts; the incorporation of approve modifications; and refurbishment as necessary.

3.2.1 Scope of Overhaul

The scope of overhaul for Field Heater and Related Equipment is defined at paragraphs 4.9 and

4 REQUIREMENTS

4.1 General Requirements

The contractor must perform R&O only on those field heaters and related equipment for which they have authorization to equal or better than original performance parameters. The R&O must be performed in accordance with this SOW, administrative documents, Annex B Logistics SOW and the ALM-184-001/JS-001 R&O Manual, and the Quality Assurance requirements stated herein, such that the CF must be provided with functional, safe and reliable field heaters and related equipment. Within 30 calendar days after contract award the contractor must submit Acceptance Test Procedure to be approved by the TA. The contractor must be responsible for obsolescence management of the equipment. All parts and materials must be as per original equipment manufacturer (OEM) design. Any changes to the parts, equipment configuration, or design must be approved by the TA. All repair and overhaul work must be approved by the TA.

4.2 Contractor Experience

The Contractor must possess experience in the repair of diesel fuel fired space heaters or Military R&O contract.

4.3 Contractor Resources

4.3.1 Engineering and Technical Staff

In order to provide satisfactorily the services, the contractor must possess a staffed engineering and technical organization for design and qualification work. The engineering staff must include at least one (1) professional engineer registered with a licensing and regulating body for engineering in a province of Canada, and holds a permit to practice engineering in that province.

4.3.2 Test Facilities

4.3.2.1 The Contractor must possess the in-house capability to perform Acceptance Test Procedures in accordance with the applicable engineering orders and Original Equipment Manufacturer test and data sheets. These tests are required for acceptance of field heaters and related equipment after performing repair and overhaul work.

4.3.2.2 The Contractor must perform and obtain the applicable certificates for Qualification Test Procedures in accordance with the applicable test procedures specified in CSA – B140 standards. These tests are required to re-qualify field heaters and related equipment after performing upgrade work.

4.3.3 Publication Resources

The Contractor must have office resources necessary to produce electronic manuals, technical drawings, and other logistics and engineering documentation.

4.4 Performance and Reliability

Equipment repaired or overhauled in accordance with the terms of this contract will be produced to meet the standards of performance and reliability described in applicable engineering orders and Original Equipment Manufacturer test and data sheets. When such standards are not described or when the standards described are considered by the contractor to be inadequate, the contractor will submit the standards of performance and reliability to which he proposes to repair or overhaul the equipment through the National Defence Quality Assurance Representative (NDQAR) to the TA for approval.

4.5 Maximum Repair Cost (MRC)

The MRC must not be exceeded without authorization of the Procurement Authority (PA). The anticipated MRCs are listed in Table 3 below:

Table 3: Maximum Repair Cost for Field Heaters and Related Equipment

ITEM	FIELD HEATERS AND RELATED EQUIPMENT TYPE	MRC - $CAD
1	4520-20-006-2964	$ 4,200.00
2	4520-20-007-2055	$ 4,800.00
3	4520-21-886-2954	$ 3,400.00
4	4520-01-550-7748	$ 3,400.00
5	4520-21-911-9025	$13,000.00
6	2815-01-102-3172	$ 2,300.00
7	4420-01-104-0264	$ 1,000.00

4.6 Minimum and Maximum Repair Units

The minimum number of field heaters and related equipment which may be processed through the R&O facility may be zero. The forecast quantity is dependent upon field heater and related equipment type and the quantity in service. Table 4 defines current forecasts and will be updated annually.

Table 4: Yearly Forecasted Repair and Overhaul Quantity

ITEM	FIELD HEATERS AND RELATED EQUIPMENT TYPE	Year 1	Year 2	OPTION Year 3	OPTION Year 4	OPTION Year 5
1	4520-20-006-2964	100	240	180	180	180
2	4520-20-007-2055	40	60	60	60	60
3	4520-21-886-2954	80	80	80	80	80
4	4520-01-550-7748	10	10	10	10	10
5	4520-21-911-9025	10	10	10	10	10
6	2815-01-102-3172	6	6	6	6	6
7	4420-01-104-0264	6	6	6	6	6

4.7 Repair / Condemn Decisions

In the event that a field heater and related equipment cannot be repaired within the MRC stated above, the Contractor must refer relevant data to the TA for a decision. The TA, or a designated representative, will respond in one of three ways:

1) Proceed with the repair with authorization to exceed the MRC by a stated amount;
2) Condemn the field heater and related equipment and return it to the CFSS; or
3) Condemn the field heater and related equipment with authorization to remove and reuse

(cannibalize) serviceable parts. The Contractor is responsible to report salvaged parts inventory annually as Government Furnished Overhaul Spares (GFOS).

4.8 Provision of Material

4.8.1 Government Supplied Material

The Government does not intend, in most cases, to provide spare parts to the Contractor. At the request of the contractor, the Government will, if available, provide the parts to the contractor. If the Government provides spare parts to the contractor for repair and overhaul, the value of the parts must be deducted from the MRC of the unit for which the parts are intended. The contractor must provide suitable storage facility and insurance to protect all Government Supplied Materials, included but not limited to equipment, spares, TDP, documentation, software and specialty tools, etc.

4.8.2 Contractor Supplied Parts

The Contractor must be responsible to provide parts required, including locating of sources for the required parts. The Contractor must be responsible for the obsolescence management of the parts in accordance with paragraph 4.8.3.

4.8.3 Obsolescence

In the event that an original part is no longer available, the Contractor must be responsible for sourcing and managing parts obsolescence at their own expense when performing R&O. The Contractor must obtain Technical Authority approval to substitute parts. The substitute part must be fit, form, and function equivalent; and must not negatively affect safety, reliability, durability, cost, or maintenance diagnostics. In the event of substitution of a part due to obsolescence, the Contractor must document it in accordance with paragraph 4.14 Documentation.

4.8.4 Contractor Furnished Parts

The Contractor must be responsible to provide parts on “as and when” required basis that will be detailed in a DND 626 Task Authorization. The provision of these parts is not intended as a standing offer type arrangement and will be for operational requirements only.

4.8.5 Contractor Repair Parts Account

Contractor Repair Parts Account (CRPA) will be established within DRMIS to capture locations of any DND/CF owned and furnished spare parts and components, with a Serviceable and an Unserviceable storage location. It records all managed spare parts pre-propositioned within that CRPA Plant /Serviceable Storage Location. The spares are located at the contractor’s repair facility and are to be used to assist on the repair of the repairable items contracted out for repair. These spares are called Contract Issue Spares (CIS) because they are DND spares issued to the contractor in order to affect the repair or overhaul of DND equipment. As a means of inventory control of DND furnished spare parts, materials and equipment a Contractor Repair Parts Account (CRPA) will be established through Director Common Procurement and Supply (DCPS) 5-4.

4.9 General Extent of Work

4.9.1 Mechanical

All mechanical systems must be inspected and repaired as required. The combustion system must be inspected to ensure the integrity of the combustion chamber and heat exchanger. All exhaust stack components must be inspected and replaced as required. Fuel storage and delivery systems must be inspected for corrosion, leaks, operation and cleanliness. All filter elements must be renewed/replaced. Defective components must be repaired or replaced. The

air circulation system must be inspected and tested for proper operation, presence of exhaust gasses in the heated air outlets, and for efficiency of operation.

4.9.2 Electrical
All electrical components must be inspected and tested for operational integrity of connections, high voltage leakage and the presence of electrical shock hazards. Required voltage levels must be tested for combustion motor, blower motor and fuel ignition. Defective parts, electrical wiring and harnesses must be replaced so as to conform to original wire size and/or wire colours and wiring schematic diagrams.

4.9.3 Safety
All systems and components affecting the safety of the user/operator or those affecting hazardous operation of the field heater and related equipment must be inspected and tested for correct operation. Defective components must be replaced. All warning decals and labels and data plates must be clear and legible, and arrows indicating the direction of rotation of all fan/blower devices must be clearly visible.

4.9.4 Finish
There is no requirement to refinish field heaters and related equipment to an industrial production standard. The exterior frame and panels must be inspected for safety hazards (exposed sharp surfaces) bent frames, cut, torn or punctured panels. Flanges at air inlets and outlets must be inspected and repaired as necessary to ensure an easy and quick fit to standard military type ducts. Refinishing of the field heaters and related equipment must be done to the extent necessary to prevent corrosion damage to exposed metal surfaces. Field heaters and related equipment must be repainted or touched up (dependant on condition upon receipt) with finish materiel of a colour and type to closely match the existing finish.

4.9.5 Painting
CARC painted field heaters and related equipment must be repainted or touched up (dependant on condition upon receipt) in accordance with Appendix A1 to Annex A. Products meeting U.S. specifications for CARC are subject to Controlled Goods Regulations and International Traffic in Arms Regulations (ITAR).

4.10 Field Heater and Related Equipment Overhaul Work

4.10.1 Equipment Inspection:

4.10.1.1 Conduct Acceptance Test Procedure in accordance with paragraph 4.11 prior to overhaul; and

4.10.1.2 Conduct the Acceptance Test Procedure in accordance with paragraph 4.11 on the Overhauled unit. The equipment performance should be reinstated back to the OEM performance within 3% in value.

4.10.2 Mechanical Work:

4.10.2.1 Inspect heat exchanger for any damages. Conduct hydrostatic pressure test. Repair any weldment damage / cracks in the heat exchanger. Replace heat exchanger for any failed leak test in excess of 5% from permissible value;

4.10.2.2 Inspect and clean heat exchanger to remove any calcification, debris, rust and any

accumulated soot to restore heat exchanger thermal efficiency. Measure the heat-exchanger material wall thickness. Replace heat exchanger for any metal degradation or deterioration in excess of 30%;

4.10.2.3 Clean heat exchanger baffles to remove any calcification, debris, rust and any **a**ccumulated soot to restore heat exchanger thermal efficiency. Measure the baffles material wall thickness. Replace baffles for any degradation or deterioration of metal in excess of 30%;

4.10.2.4 Replace all gaskets;

4.10.2.5 Check the functionality of fan sensors, temperature switch, tip over switch, flame out sensor and thermostat, clean or replace as required;

4.10.2.6 Replace igniter rods and electrodes;

4.10.2.7 Replace fuel injection atomizer nozzle;

4.10.2.8 Inspect and calibrate fuel pump to the desired value recommended by the OEM. Replace fuel pump for any knocking noise in the pump;

4.10.2.9 Inspect and clean combustion air supply fan to remove any calcification, debris, rust and any accumulated dirt to restore fan mechanical power;

4.10.2.10 Replace any gaskets or seals on the burner assembly;

4.10.2.11 Inspect and clean solenoid valve;

4.10.2.12 Conduct hydrostatic pressure test for all tubing, hoses, tube and hose fittings and welded joints. Repair or replace as required;

4.10.2.13 Inspect and clean fuel tank to remove any debris and replace fuel tank seals; and

4.10.2.14 Inspect and test fuel tank cap cover. Clean and replace as required.

4.10.3 <u>Electrical Work</u>:

4.10.3.1 Clean motor fan blades and remove any calcification, debris, rust and accumulated dust to restore fan mechanical power to original performance;

4.10.3.2 Run the motors and measure the motor speed, motor stop time, full load current and fan power. Replace the bearing or motor assembly for any knocking noise in the bearing or speed reduction by 15% or motor stop time decrease by 20%;

4.10.3.3 Conduct dielectric test in the motor winding and replace the motor if the value decreased by 40% from the OEM specifications;

4.10.3.4 Inspect and clean all electrical contacts. Repair or replace defective wiring, wiring termination lugs and loose connections;

4.10.3.5 Inspect and clean electrical contactor(s). Measure the contact resistance and calculate the contact power loss. Replace contactor(s) for any values in excess of 4 Watts; and

4.10.3.6 Measure the contactor(s) coil resistance and the dielectric strength. Replace contactor(s) with poor insulation resistance or coil resistance values not as per OEM specification.

4.10.4 <u>Frame and Sheet Metal Work</u>:

4.10.4.1 Inspect all the door hinges, door locks and repair or replace as required;

4.10.4.2 Replace filters;

4.10.4.3 Inspect structure weldment for any cracks and repair as required;

4.10.4.4 Inspect all sheet metal work and clean to removal any calcification, debris, rust and any accumulated dust to restore ducting back to its original condition. Re-apply protective coating as required for any coating damages in excess of 20% from total area;

4.10.4.5 Inspect and replace any damaged insulation material;

4.10.4.6 Repair any dent or damage in the sheet metal; and

4.10.4.7 Strip paint if required, and refinish exposed sheet metal as per OEM specifications.

4.11 Acceptance Test Procedures

The contractor must develop Acceptance Test Procedures, in Contractor`s format, in accordance with the applicable engineering orders and Original Equipment Manufacturer (OEM) test and data sheets for the Field Heaters and Related Equipment within 30 calendar days after contract award.

4.12 Subcontracting of Repair Services

Subcontracting of repair services by the contractor is authorized. Subcontracting that exceeds 50% of the MRC for any field heater and related equipment must be approved by the Procurement Authority.

4.13 Technical Investigation and Engineering Support (TIES)/ Special Investigation and Technical Studies (SITS)/ Field Service Representatives (FSRs) and Mobile Repair Parties (MRPs)

4.13.1 <u>TIES/SITS/FSR/MRP Services</u>

The Contractor must provide TIES/SITS/FSR/MRP services such as investigations, studies, preparation and incorporation of modification requirements, special testing (or work of similar nature) and the use of expert specialized technical assistance (eg, training requirements, integrated logistics support, manual and technical data updates, etc.) on an as and when required basis to DND and will be detailed in an approved DND 626. Requests for TIES work may originate from the Contractor, or be communicated by DND to the Contractor. Recommendations regarding cost reduction, product improvement, failure investigation must be submitted in proposal format to DND, and must include cost of the work proposed, justification for the work and the business case to support the work. DND will evaluate the proposals and accept or reject them. If the proposal is accepted by DND the work can only be authorized through the use of a DND 626 form. Contractors are cautioned that no work must be performed or must be paid for by Canada without an approved DND 626 submitted by the Procurement Authority or Contracting Authority.

4.13.2 <u>TIES/SITS/FSR/MRP Engineering Data and Drawings</u>

The contractor must provide engineering data relevant to these investigations including reproducible drawings. When drawings are required, they must be prepared, processed and approved in accordance with CFTO D-01-400-001/SG-000 Engineering Drawings Practices for Level 3 Drawings and Technical Data Lists.

4.14 Documentation

In the event that any changes to the equipment configuration, integrated logistic support, and/or operating & maintenance procedures are required as a result of parts replacement or equipment modification, the Contractor must inform the TA, in writing, of all the necessary changes to the equipment Technical Data Package (TDP), the Integrated Logistic Support (ILS) documentation, and to the spare parts cataloguing systems. Changes might include but not be limited to part number; manufacturer; source of supply; NSN if available; circuit references; level 3 drawings; DND CFTOs and O&M manuals; equipment instruction and identification plates; training manuals; and related DND databanks, etc. The contractor must seek and receive approval from the TA prior to making any changes to related documentation and TDPs. The contractor must promulgate changes to DND documentation in accordance with DND documentation style and quality standards. The TDP as maintained by the Contractor must be referenced and used for maintenance purposes only, and only in relation to the DND equipment under the contract. No other use of TDP by the contractor is authorized unless with written approval issued from DND.

4.15 Unsatisfactory Condition Reports

Upon mutual agreement, the Contractor must investigate and make recommendations on Unsatisfactory Condition Reports (UCR) submitted by the appropriate DND Authority. The Contractor may be required to originate UCRs in accordance with CFTO C-02-015-001/AG-000.

4.16 Communication and Technical Assistance

The contractor must provide communication capability that can transmit text and image files concerning repair, overhaul, reports and other project documentation over the Internet among its centres of operation to the TA and to Canadian Forces field units. The contractor must also provide e-mail and telephone technical assistance services during 0800-1600hr, staffed with qualified technical personnel, to provide quick response on technical issues from the TA or CF field units.

4.17 Preparation for Delivery

4.17.1 <u>Preparation and Preservation Instructions</u>

Preparation for Delivery must be in accordance with A-LM-184-001/JS-001, Part 9. Preservation of mechanical components, fuel lines, oil lines, etc., must be prepared according to the instructions below:

1) **Metal Surfaces -** Spray metal preservative (LPS all-purpose penetrant, lubricant and protectant) on the internal and external components which should help to prevent metal corrosion and rust.
2) **Ports** - Cap all ports with plastic caps, plugs, bags and tape. This should help to prevent water, insects and debris from disrupting the system.
3) **Fuel Lines -** when indicated by the TA, in cases where repaired material is being shipped directly to the unit or is to be stored for short periods, fuel lines must not require drainage if they can be effectively sealed to prevent leakage. The Contractor must add preservative fuel in the tank and run the heaters for 10 minutes (the fuel preservative will fill the fuel filter and the lines), turn off the heater and shut-off the fuel filter valve. The fuel will be contained within the fuel line and the filter; this will prevent fuel air locks from developing in the system to allow immediate usage of the equipment as intended. When it is indicated by the TA that heaters will be sent to long term storage, fuel lines must be purged and preserved according to A-LM-184-001/JS-001, Part 9.

4) **Fuel Tanks** - Drain the fuel tank; but keep all fuel lines filled with fuel and fuel stabilizer which should prevent air locks in system to simplify heater restart.
5) **Engine Oil –** For short term preservation of Diesel engines (when applicable), the Contractor is to change the engine oil with the filter and to ship the equipment with the engine block filled with new oil as recommended by the OEM. This will prevent the corrosion to the internal components of the engine. For long term preservation, engine oil valves should be coated with preservative oil to prevent engine components from seizing after long periods of storage.
6) **Batteries –** If applicable, disconnect the battery (-) negative terminal, secure the cable with tie-wrap and protect the terminal with the post with battery terminal grease (silver grease) for corrosion protection.

4.17.2 Packaging

The Contractor must package the equipment in accordance with Part 9, A-LM-184-001/JS-001 and/or when provided, use the original manufacturer's packaging. Packaging must also comply with health, safety and pest controls regulations. The Contractor must ensure that all equipment leave the Contractor's facility in such condition as to prevent in-transit damage while being returned to the CFSS. The Contractor must provide warranty against equipment damages during transportation and handling as a result of inadequate packaging by the contractor.

4.18 Meetings

4.18.1 Meetings, Agenda and Minutes

4.18.1.1 Meetings will be held at the Contractor's facilities, with representatives of the Contractor, the Department of National Defence and Public Services and Procurement Canada. All meetings must be at no additional cost to Canada.

4.18.1.2 The Contractor must prepare and submit a Meeting Agenda for all meetings.

4.18.1.3 The Contractor must prepare and submit Meeting Minutes for all meetings.

4.18.2 Kick-off Meeting

4.18.2.1 The Contractor must prepare for and participate in a project Kick-off Meeting, no later than 30 calendar days after Contract award.

4.18.3 Progress Review Meetings

4.18.3.1 Progress Review Meetings (PRM) must be held to review the total contract status as of the review date, and to present the opportunity for the resolution of all current and unresolved issues known as of that date. PRMs must be held, as required by the TA at the contractor's plant. The PRMs must concentrate on management and contractual level issues, technical and procedural requirements, and must address overall program status including resource allocation, priorities, funding levels and the identification of potential risk areas.

5 QUALITY ASSURANCE

5.1 Quality Assurance Representative

All stages of the R&O procedures must be subject to inspection by a National Defence Quality Assurance Representative (NDQAR). The NDQAR must monitor for best industrial practices.

5.2 Test and Inspection

Each repaired/overhauled field heater and related equipment must undergo acceptance testing that meets or exceeds standard industrial methods and the Acceptance Test Procedures in accordance with paragraph 4.11. The Contractor must prepare a test report in Contractor`s format but approved by the TA. A copy of the test report must be shipped with the equipment and a copy retained for the TA. All completed equipment must be visually inspected for security of components and hazardous conditions. All deficiencies must be noted and repaired.

5.3 CSA Certification

When directed by the TA under a TIES tasking, the contractor must obtain Canadian Standards Association (CSA) safety certification for the equipment that has been modified and/or repaired.

6 ENVIRONMENTAL, OCCUPATIONAL HEALTH AND SAFETY

6.1 Compliance

The contractor and subcontractors must comply with all Canadian Environmental, Occupational Health and Safety legislation.

6.2 Workplace Hazardous Materials Information System (WHMIS)

The Contractor must have a WHMIS program in place within its facility. The Contractor must certify that it meets all of the current Federal and Provincial Environment, Health and Safety (EHS) legislation environmental standards for the handling, transportation and disposal of waste and hazardous wastes. The Contractor must be solely responsible for the handling, transportation and disposal of all waste, and hazardous waste material generated as a result of the work in this Statement of Work, Annex A, and Annex B Logistics SOW.

6.3 Controlled Products

It is DND policy to restrict or eliminate the use of controlled products. Controlled products are defined as those that contain the following substances: regulated and proposed to be regulated under the *Canadian Environmental Protection Act, 1999 (CEPA)*; targeted in Schedule 1, Toxic Substance List under CEPA and/or subject to the reporting requirements under the National Pollutant Release Inventory (NPRI).

6.4 Use of Controlled Products

The Contractor and any Subcontractor(s) must avoid the use of any controlled products where feasible and as dictated by regulatory requirements. The use of controlled products must be reviewed in consultation with the TA, to determine whether replacement by other less hazardous products that meet performance requirements can be utilized, and if so, to replace these controlled products with products of less hazard.

6.5 Mercury Regulations

Contractor supplied parts must comply with the Products Containing Mercury Regulations, 2014.

6.6 Material Safety Data Sheets/Safety Data Sheets

Copies of Material Safety Data Sheets/Safety Data Sheets (MSDS/SDS) that are less than three (3) years old for all hazardous products utilized in relation to the contract must be provided to the TA.

6.7 Environmental Management System (EMS) and Occupational Health and Safety Management System (OHSMS)

6.7.1 <u>Environmental Management System</u>

The Contractor must implement and maintain an Environmental Management System (EMS) which is consistent with the principles presented in ISO 14001. Certification to ISO 14001 standard is preferred but not mandatory. The Contractor must, however, have a formalized set of procedures and control measures in place to achieve compliance with the requirements of the Work.

6.7.2 Occupational Health and Safety Management System
The Contractor must have an Occupational Health and Safety Management System (OHSMS) consistent with the principles presented in OHSAS 18001.

6.7.3 Applicability
The EMS and OHSMS requirement is applicable to the Contractor. The Contractor must make a reasonable effort to monitor and ensure that all subcontractors are in compliance with the applicable environmental, health and safety laws and regulations.

6.7.4 Audits
The NDQAR must have the right to make examinations and such audits of the work, control processes, procedures and infrastructure with respect to Environment, Occupational Health and Safety.

7 PROJECT MANAGEMENT

The Contractor must assign a Project Manager for this R&O contract. The Project Manager must have the responsibility and authority to manage all aspects of the work and be able to make decisions on behalf of the company. The Project Manager must be the sole interface with DND's TA.

7.1 Cost and Schedule Control

The Contractor must provide cost and schedule control of R&O activities, modifications, special tasking's, document changes and all other activities pertaining to the contract.

7.2 Access to Facilities

7.2.1 Government Access to Contractor's Facilities
Authorized DND representatives must be granted free access to the contractor's facilities, and to those of subcontractors. The contractor is entitled to require that visiting DND personnel be escorted by contractor or subcontractor personnel.

7.2.2 Contractor Access to Government Facilities
If required, access by contractor or subcontractor personnel must be arranged through the TA.

7.3 Requests for Technical Information/Assistance

All requests for technical information and/or assistance must be directed to the TA, or to the Life Cycle Materiel Manager (LCMM) as directed.

7.4 Compliance with DND Policies

The Contractor must comply with Department of National Defence (DND) policies, orders, directives, instructions and best practices when accessing DND owned or controlled lands, buildings or equipment.

8 DELIVERABLES

8.1 Acceptance Test Procedures

Within 30 calendar days after contract award, the Contractor must submit to the TA, Acceptance Test Procedures in accordance with paragraph 4.11 for approval.

8.2 Repaired Materiel

The Contractor must deliver all repaired materiel to 25 Canadian Forces Supply Depot or to a location as directed by the PA. Items returned must be accompanied by a properly filled out and signed CF942/CF942A materiel condition Tag/Label when applicable in accordance with A-LM-184-001/JS-001. The CF942 Tags will be provided to the Contractor from the NDQAR.

8.3 Completion of Work Documentation

The Contractor must provide one (1) copy of the R&O service record and test report attached with the equipment for shipment. The service record must include a complete list of replaced and reconditioned parts installed and a tabulated list of R&O procedures performed on the equipment. The Contractor must submit to the TA a list of documents that require revisions as a result of configuration changes.

8.4 Identification Markings

All equipment assemblies or components after overhaul must have the original markings information restored and must have the following information added immediately adjacent to the original identification markings or previous overhaul markings:

1) Overhaul's Identification;
2) Date of Overhaul;
3) Date of expiration of Warranty; and
4) Inspector's stamp/number.

8.5 Reports

8.5.1 In-inspection Report

Within one (1) week of reception of items to repair, the Contractor must submit to the TA an In-inspection Report for each item in Microsoft Excel format. As a minimum, the In-inspection Report must contain the following fields:

1) Work Order Number;
2) NSN;
3) Equipment Description;
4) Equipment Serial Number;
5) Receipt Date;
6) Summary of work required;
7) Estimated Labour Hrs;
8) Estimated Part List;
9) Total Estimated Repair and Overhaul cost;
10) Estimated Completion date; and
11) Notes.

8.5.2 Monthly Progress Report

During the first week of every month, the contractor must submit to the TA a Monthly Progress Report in Microsoft Excel format. As a minimum, the Monthly Progress Report must contain the following fields:

1) Work Order Number;
2) NSN;
3) Equipment Description;
4) Equipment Serial Number;
5) Receipt Date;
6) Work Status (Waiting for Parts, In- Progress XX% completed, Ready for QA inspection, Completed.....etc.);
7) Estimated date of completion;
8) Total accumulated cost; and

9) Notes.

8.5.3 Annual Inventory Report

The Contractor must submit to the PA an annual report detailing the value of all Accountable Advance Spares (AAS) and Government Furnished Overhaul Spares (GFOS) inventory held on March 31 in accordance with A-LM-184-001/JS-001, paragraph 15.4.

8.5.4 Other Reports

The Contractor must submit other reports as and when requested by the TA and as detailed in Annex B Logistics SOW and the A-LM-184-001/JS-001.

APPENDIX 1 TO ANNEX "A"
WORK STATEMENT FOR CHEMICAL AGENT RESISTANT COATING (CARC) SYSTEM

NOTICE
This documentation has been reviewed by the technical authority and does not contain controlled goods. Disclosure notices and handling instructions originally received with the document shall continue to apply.

AVIS
Cette documentation a été révisée par l'autorité technique et ne contient pas des marchandises contrôlées. Les avis de divulgation et les instructions de manutention reçues originalement doivent continuer de s'appliquer.

OPI
Martin Janssen, QETE 3-2
QETE Lead Chemist and Technical Authority/LCMM Canadian Army
for Organic & Associated Inorganic Protective Coatings
Quality Engineering Test Establishment
National Defence Headquarters
Government of Canada
Ottawa ON Canada K1A 0K2
Tel: 819-939-9329
Fax: (819) 997-4096
E-Mail: martin.janssen@forces.gc.ca

1. Scope

1.1. This document outlines the procedures to be followed and the products to be used in order to paint surfaces of the Canadian Army operational vehicles/equipment with the distinctive exterior permanent matt green colour (FED-STD-595C #34094) and interior permanent gloss white colour (FED-STD-595C #17925) coating systems that provide the corrosion, the camouflage, the infra-red and CARC properties required for the protection of the vehicles/equipment and for the protection of the soldier.

2. Acronyms

CARC Chemical Agent Resistant Coating
CBRN Chemical, Biological, Radiological and Nuclear
CFSS Canadian Armed Forces Supply System
DGLEPM Director General of Land Equipment Program Management
DLR Director Land Requirements
DND Department of National Defence
CAO Canadian Army Command Order
NSN NATO Stock Number
PC (Organic and Associated Inorganic) Protective Coatings
SOW Statement of Work
SSPC Steel Structure Painting Council
TA Technical Authority
TBD To Be Determined
VCDS Vice Chief of the Defence Staff

3. Applicable Documents and Product NSNs

3.1 The following specifications and standards form part of this Statement of Work to the extent specified herein. Copies of these documents are available online from the US Department of Defense web site at http://quicksearc.dla.mil/ or from the Standardization Document Order Desk, 700 Robbins Avenue, Building 4D, Philadelphia, PA 19111-5094.

Specification	NSN	Description
MIL-DTL-53072	N/A	Detail Specification Chemical Agent Resistant Coating (CARC) System Application Procedures and Quality Control Inspection
DOD-P-15328	8030-00-281-2726	Primer (Wash), Pre-treatment (Formula 117 For metals) (Metric) *(NSN for 2 US GAL size kit)*
TT-C-490 Type III	8030-00-281-2726	Chemical Conversion Coatings and Pre-treatments for Ferrous Surfaces (Base for Organic Coatings) (*NSN for 1 US Gal size kit*)
FED-STD-595	N/A	US Federal Standard-Colors Used in Government Procurement
MIL-DTL-53022 Type IV	8010-01-589-7077	Primer, Epoxy Coating, (Enhanced) Corrosion Inhibiting, Lead and Chromate Free (*NSN for 1.25 US Gal size kit*)
MIL-DTL-53022 Type V	8010-01-610-7329	Primer, Epoxy Coating, (Enhanced) Corrosion Inhibiting, Lead and Chromate Free (*NSN for 6X250 ml aerosol can kits*)
MIL-PRF-32348 Type I Class I with a maximum of 45 Gloss Units at 60°	8010-01-592-0167 8010-01-620-2690	Primer, Powder Coating, Corrosion Inhibiting (*NSN for 50 pound bag, colour #26622 or #27875 with a maximum Gloss level of 45 Gloss Units as determined by ASTM D523 at a 60° geometry*)
ASTM D 523	N/A	Standard Test Method for Specular Gloss
MIL-PRF-24667 Type I, II or IV, Composition G	TBD 8010-01-397-3806	Coating System, Non-Skid, for Roll, Spray or Self-Adhering Application (*NSN for 5 US Gal kit*)
MIL-DTL-64159 Type II	8010-01-493-3169 8010-01-493-3170 8010-01-493-3177 8010-01-493-3179	Coating, Water Dispersible Aliphatic Polyurethane, Chemical Agent Resistant (*NSNs are for 0.75 and 3 US Gal size colour green #34094 and tan #33446*)
MIL-DTL-64159 Type III	8010-01-596-7862 8010-01-596-7859 ~~8010-01-644-2659~~ 8010-01-596-7855	Coating, Water Dispersible Aliphatic Polyurethane, Chemical Agent Resistant (*NSNs are for 30 mL kit colour green #34094, for 30 mL kit colour tan #33446 and for 30 mL kit colour black #37030 respectively*)
MIL-PRF-22750 Type II Class H Grade B	8010-01-419-1164	Performance Specification, Coating, Epoxy, High Solids, Interior Use Only (*NSN is for 1 US Gal kit colour white #17925*)
MIL-PRF-32348 Type II Class I	8010-01-605-5413	Primer Powder Coating with no finish coating for interior use only, Chemical Agent Resistant (*50 pound bag, colour white #17925*)
MIL-PRF-32348 Type III Class I	8010-01-656-0100	Powder Coating Camouflage Chemical Agent Resistant Finish (*50 pound bag, colour green #34094*)
MIL-PRF-32348 Type III Class I	TBD	Powder Coating Camouflage Chemical Agent Resistant Finish (*50 pound bag, colour tan #33446*)
MIL-PRF-32348 Type IV Class I	8010-01-610-2410	Powder Topcoat, Ammunition Container Chemical Agent Resistant Coating (*NSN for 50 pound bag, colour green #34079*)

MIL-PRF-32348 Type IV Class I	8010-01-610-2413	Powder Topcoat, Ammunition Container Chemical Agent Resistant Coating (*NSN for 50 pound bag, colour Tan #33446*)
TSP	7930-20-A0H-0013	Tri-Sodium Phosphate (*1 pound container*)
Acetone	6810-21-878-4860	Acetone Technical (*1 Liter container*)

4. Requirements

4.1 A CARC system shall be applied on the interior and exterior surfaces of the Canadian Army operational vehicles/equipment in conformance with the following descriptions.

4.1.1 Cleaning

4.1.1.1 All parts shall be cleaned immediately before surface preparation.
Prior to surface preparation, all surfaces shall be freed of corrosion or soil contaminants such as grease, oil, welding flux, scale, dirt, adhesives or other foreign matter that may interfere with surface preparation, treatment or coating. For this purpose use a hot alkaline cleaning by immersion, spray or vapour process and/or appropriate organic solvent(s) as per MIL-DTL-53072 (latest edition).

4.1.1.2 Precautions shall be taken to ensure that surfaces remain clean and dry until they are pre-treated, primed and top coated.

4.1.2 Surface Preparation

4.1.2.1 Heavy metal parts shall be processed by abrasive grit blast to a white metal SSPC-SP-5 surface finish to impart a profile of 38 to 50 microns (1.5 to 2 mils). Lighter delicate metal parts that cannot withstand aggressive grit blasting without warping shall be processed in accordance with paragraph 4.1.2.2. For non-metallic parts surface preparation, perform a uniform scuffing of the surface with a 180 grit abrasive media. Dust-off surfaces.

4.1.2.2 For delicate metal parts surface preparation, perform an abrasive grit blast cleaning to a white metal SSPC-SP-5 surface finish imparting to the substrate a profile of 13 microns. Dust-off surfaces.

4.1.3 Surface pre-treatment

4.1.3.1 Metal parts and non-metallic parts surfaces prepared as per paragraph 4.1.2.1 above do not require pre-treatment.

4.1.3.2 Delicate metal part surfaces prepared as per paragraph 4.1.2.2 above shall receive an organic pre-treatment (wash primer) coating meeting the requirements of specification TT-C-490 type III (DOD-P-15328) (latest edition).

4.1.4 Primer

4.1.4.1 A liquid primer coating meeting the requirements of specification MIL-DTL-53022 Type IV (latest edition), Epoxy Coating, Enhanced Corrosion Protection or a powder primer coating, Corrosion Inhibiting meeting the requirements of specification MIL-PRF-32348 Type I Class I (latest edition) with a maximum Gloss level of 45 Gloss Units as determined by ASTM D523 at a 60° geometry

shall be applied to all surfaces that need to be coated. These primers shall be applied to a dry film thickness (DFT) as recommended by the manufacturer technical data sheet or specifically for MIL-DTL-53022 Type IV (latest edition) when applied direct to metal (i.e. w/o pre-treatment), a DFT of 50 to 63 microns shall be achieved when measuring the DFT of the primers over the highest peaks of the profile. For interior surfaces see also para 4.1.6.2.ii.

WARNING: Powder primer coatings requiring a cure temperature above 180°C **shall not** be used on composite materials or parts pre-treated with TT-C-490 Type III.

4.1.5 <u>Non-Skid Surface</u>

4.1.5.1 Apply, as per manufacturer's instructions a non-skid coating meeting the requirements of specification MIL-PRF-24667 Type I, II, or IV, Composition G, (latest edition) colour #36076 (dark grey) in accordance with FED-STD-595 (latest edition) to surface areas intended as walk-on surfaces.

WARNING: Products qualified to MIL-PRF-24667 Type I, II, or IV, Composition G are applied in a relatively thick coat and contain solvents that will negatively affect the adhesion of the primer MIL-DTL-53022 Type IV if applied too soon i.e. before the primer "Dry Hard" condition has been reached. Therefore, the non-skid product shall be applied no sooner than the dry hard condition of the primer and its dry hard condition must be reached within a period of time that will allow for the application of the topcoat within 24 hours of the application of the primer.

4.1.6 <u>Topcoats</u>

4.1.6.1 Exterior surfaces
A liquid polyurethane topcoat meeting the requirements of specification MIL-DTL-64159 Type II (latest edition) or a finish powder coating meeting the requirements of MIL-PRF-32348 Type III Class I, colour #34094 (flat green) as per FED-STD-595 (latest edition) shall be applied to exterior surfaces including exterior walk-on surface areas having non-skid coating.

WARNING: Powder coatings requiring a cure temperature above 180°C **shall not** be applied over composite materials, MIL-PRF-24667 Type I, II, or IV, Composition G non-skid or MIL-DTL-53022 Type IV epoxy based coatings.

4.1.6.2 Interior surfaces
i. An epoxy topcoat meeting the requirements of specification MIL-PRF-22750 Type II, Class H, Grade B (latest edition), colour #17925 (gloss white) as per FED-STD-595 (latest edition) shall be applied to interior surfaces including walk-on surface areas with non-skid coating.

4.1.6.3 Interior surfaces
i. An epoxy topcoat meeting the requirements of specification MIL-PRF-22750 Type II, Class H, Grade B (latest edition), colour #17925 (gloss white) as per FED-STD-595 (latest edition) shall be applied to interior surfaces including walk-on surface areas with non-skid coating.

ii. Powder primers that do not require a finish coating and meeting the requirements of MIL-PRF-32348 Type II Class I (latest edition), colour #17925

(gloss white) as per FED-STD-595 (latest edition) intended for direct to metal in a single application can also be used on interior surfaces.

WARNING: Powder primer coatings requiring a cure temperature above 180°C **shall not** be applied over composites or MIL-PRF-24667 Type I, II, or IV, Composition G non-skid epoxy based coatings.

4.1.6.4 Interior surfaces of parts that could be directly exposed to chemical agents such as hatches, ramps and doors shall be coated as per paragraph 4.1.6.1 above.

WARNING: The topcoats shall not be applied before the “Dry Hard” condition of the non-skid material has been reached and shall be applied within 24 hours after the application of the primer. There shall be no walking on non-skid surfaces for a period of 7 days to allow full cure of the coating system.

4.1.7 Marking and Touch-Up

4.1.7.1 Marking

4.1.7.1.1 Markings identifying the vehicle/equipment information, the flag, numbering and lettering shall be performed with a touch-up coating kit meeting MIL-DTL-64159 Type III (latest edition) and FED-STD-595 (latest edition) colour #37030 (flat black). Markings shall be applied directly over the CARC system topcoat following its cleaning, if required, with a 2% weight TSP in potable water solution followed by a potable water rinse and then an acetone wipe & dry.

4.1.7.2 Touch-Up

4.1.7.2.1 For defects or damages to the CARC system that expose the substrate it is required to clean the area to be reworked; for this purpose use a 2% weight TSP in potable water solution followed by a potable water rinse and then an acetone wipe & dry. For metallic components it is then required to remove rust or corroded metal by sanding using an 80 grit paper or a mechanically driven steel brush (if a steel brush is used it will be required to clean again the surface as described above). For composite materials, hand-scuff using a 180 grit paper. Remove sanding dust with a clean dry paint brush and apply a coat of primer meeting the requirements of specification MIL-DTL-53022 Type V (latest edition); feather-in with the existing primer. Touch-up of the topcoat shall be performed (at the dry-to-touch condition of the touch-up primer) with a touch-up coating kit meeting MIL-DTL-64159 Type III (latest edition) and FED-STD-595 (latest edition) colour #34094 (flat green); feather-in with the existing topcoat.

4.1.7.2.2 For defects or damages to the CARC system that expose the primer it is required to clean the area to be reworked; for this purpose use a 2% weight TSP in potable water solution followed by a potable water rinse and then an acetone wipe & dry. Hand-scuff the primer and surrounding topcoat using a 180 grit scuffing paper. Touch-up of the topcoat shall be performed with a touch-up coating kit meeting MIL-DTL-64159 Type III (latest edition) and FED-STD-595 (latest edition) colour #34094 (flat green); feather-in with the existing topcoat.

4.2 Selection of Materials, Mixing and Application

4.2.1 Materials used shall be selected from the applicable qualified products list (QPL/QPD) and shall be mixed and applied as per the manufacturers' Technical Data Sheet (except for MIL-DTL-53022 Type IV (latest edition) DFT when applied direct to metal (see para 4.1.4.1)). The brand name and QPL/QPD number of the materials used shall be reported to the Technical Authority/Project Configuration Manager for CAF configuration, health, and safety purposes after acceptance of First Article Test Report.

4.3 <u>Special Measures for Equipment Manufacturers/Painting Contractors</u>

4.3.1 In any instance where the CARC system specified herein interferes with the design features of specific components that are key to the operation of the equipment, it is the manufacturer's responsibility to identify and propose a suitable alternative coating system having high chemical agent resistance and corrosion protection properties. The identified alternative coating system, if endorsed by the Canadian Army PC TA, shall be used only upon receiving approval from the Commander Canadian Army (thru Chief of Staff Army Strategy) to waive the CBRN hardening policy. The brand name of the approved alternative coating system materials shall be reported to the Technical Authority/Project Configuration Manager for Canadian Army configuration, health and safety purposes.

4.3.2 Deviations from CARC products and application processes identified herein as well as deviations from the product manufacturer Technical Data Sheet must be reported to the PC TA of the Canadian Army for his evaluation and approval.

5 DND Project Authority responsibilities

5.1 Message CANARMYGEN 005-15 01 01 291300Z APR 15 PP UUU issued under authority of the VCDS establishes applicable paint policies as per CAO 21-04 dated Jun 2014 (DLR/DGLEPM). The CAO indicates that all Canadian Army operational vehicles and equipment shall be painted monochromatic matt green on the exterior and monochromatic gloss white on the interior except for hatches, ramps and doors that will be painted monochromatic matt green on the inside. Markings shall be painted in matt black.

5.2 Request to waive CAO 21-04 policy for the painting of the Canadian Army equipment must be authorized by the Commander Canadian Army (thru DLR). The identification of colours matt beige #33446 and matt green #34079 in this SOW, colours diverging from the Canadian Army standard external coating colour matt green #34094, is for information purposes only.

APPENDIX 2 TO ANNEX "A"
TECHNICAL PUBLICATIONS

ITEM 1
Heater, Duct Type, Portable
MODEL 1176756

NSN: 4520-20-006-2964

National Defence / Défense nationale

C-91-996-000/MA-001

DATA SUMMARY

FIELD SPACE HEATER

(ENGLISH DRAFT)

Issued on Authority of the Chief of the Defence Staff

Contact Officer: DCSEM-4 4-5

OPI: DCSEM 4 **©2012 DND/MDN Canada** **2012-03-13**

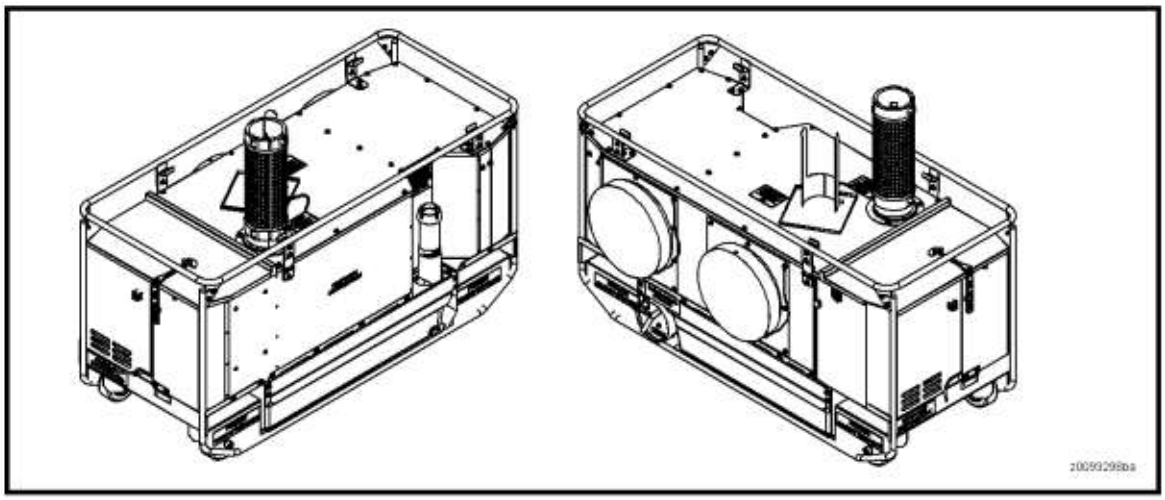

General View of Equipment

C-91-996-000/MA-001

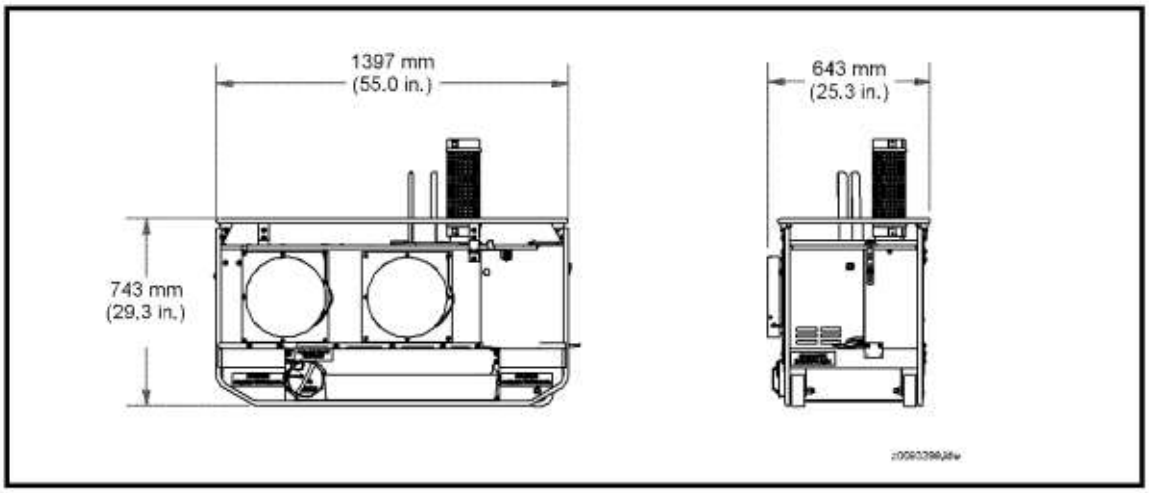

Figure 1 Equipment Dimensions

INTRODUCTION

Role

1. The role of the field heater is to provide unheated air circulation or heat in cold weather environments for work and sleeping areas.

Description

2. The field heater is capable of circulating unheated air as well as heated air for work and sleeping areas in cold environments.

3. Primary components consist of the following:

   a. A blower unit to move heated or unheated air.

   b. A burner unit to provide continuous heat.

   c. A heat exchanger unit to transfer heat.

   d. A control panel accessed from the top for controlling the field heater functions.

   e. A monitoring assembly mounted in the work and sleeping areas consisting of a thermostat and a CO monitor connected by a 30' cord to the field heater.

   f. Fuel for the burner comes either from the onboard fuel tank or from an external source connected by a hose to a three-way valve.

   g. An exhaust stack with a spark suppressor

   h. Two 15 foot air ducts with J-lock connectors.

C-91-996-000/MA-001

IDENTIFICATION

Equipment Identification

Manufacturer	DEW Engineering LLC
Model	FSH, Heater, Duct Type, Portable, 10 KBTU
Part Number	73146
Year of Manufacture	2012
Contract Demand (CD) Number	W8476-091415/001/HL
Equipment Identification Number / Nato Stock Number	4520-20-006-2964
Equipment Configuration Code	TBD
Quantity Purchased	2110

TECHNICAL SPECIFICATIONS

Weight

Weight (Empty)	116 kg (255lbs)

Dimensions

Length

Length	139.7 cm (55 in.)

Width

Width	64.3 cm (25.3 in.)

Height

Height	74.6 cm (29.3 in.)

Shipping Specifications

Volume	96.2 cm (3397.58 cf)
Stacked Height (3 Units)	222.9 cm (7.31 ft)

Performances

Heat Output	100 000 BTU @ 0ºC (32ºF)
Temperature Range	49-95 °C (120-180 °F)
Hot Air Delivery Rate	25 cubic meters per minute (882.9 CFM) minimum

C-91-996-000/MA-001

Fuel System

Types of Fuel

Primary Fuel DL-1, DL-2

Fuel Capacity

Fuel Tank Capacity ..... 72 L (19 US gal)

Operating Time Before Refuelling

Operating Time Before Refuelling ..... Minimum Time 8 Hours

Exhaust System

Type ..... Cylindrical Stainless Steel with Spark Suppression

Exhaust Stack Height

Height ..... 43.0 cm (16.9 in.)

Exhaust Stack Stowage

Stowage ..... In the base beside the fuel tank

Electrical System

Electrical Rating ..... 120 VAC 50/60 Hz
10.0 Amps Max

ITEM 2
Heater, Water, Portable, DEW Model Specification

NSN: 4520-20-007-2055

National Defence / Défense nationale

C-91-997-000/MA-001

DATA SUMMARY

FIELD WATER HEATER PORTABLE
120V, 1 PH, 15 AMPS, 60 HZ
NSN: 4520-20-007-2055

(ENGLISH DRAFT)

Issued on Authority of the Chief of the Defence Staff

Contact Officer: DCSEM 4

OPI: DCSEM 4 ©2013 DND/MDN Canada 2013-07-25

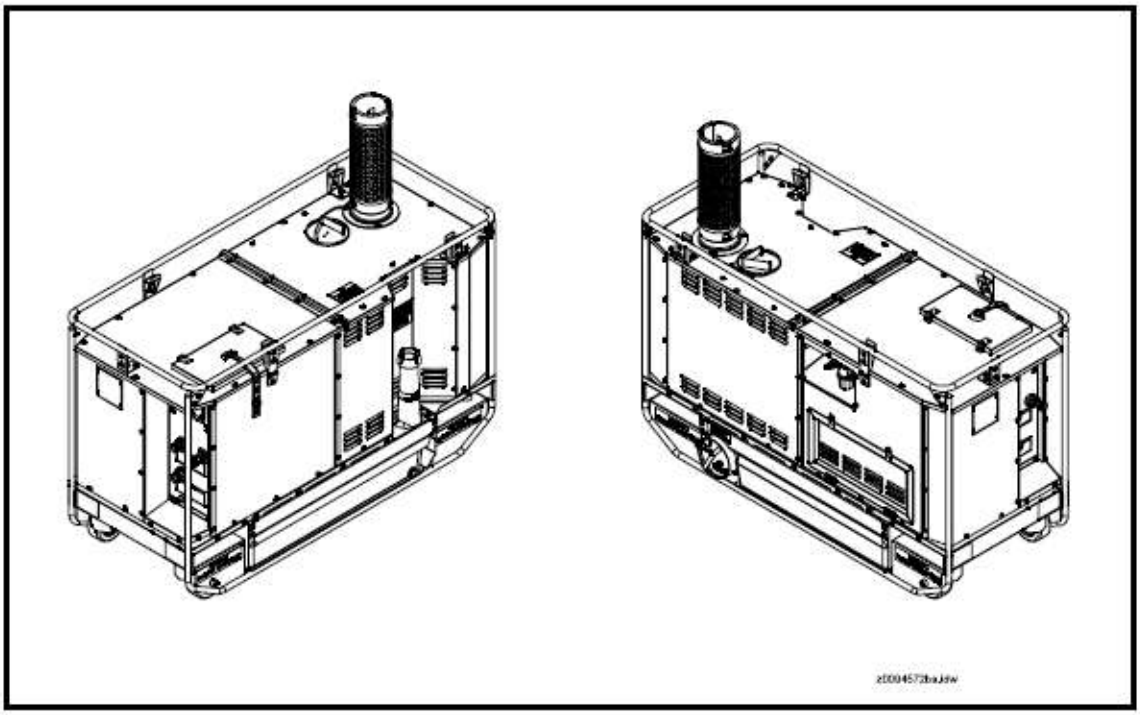

General View of Equipment

C-91-997-000/MA-001

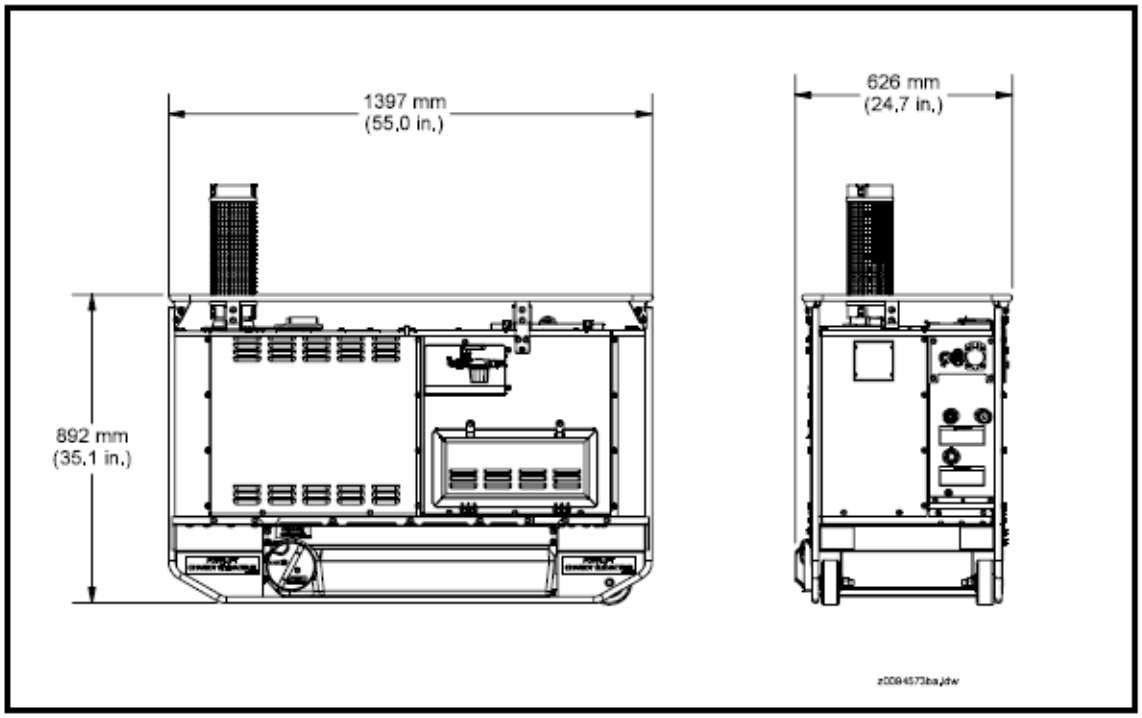

Figure 1 Field Water Heater Dimensions

INTRODUCTION

Purpose

1. The purpose of the Field Water Heater (FWH) is to provide a means of heating large quantities of water for use in the field.

Description

2. The Field Water Heater is portable diesel fired water heater capable of heating up to 11 L/min (2.9 US gal/min).

3. Primary components consist of the following:

   a. A burner unit to provide continuous heat.

   b. A heat exchanger unit to transfer heat.

   c. A water pump system to circulate the water from the input source to the hot water output.

   d. A air tank and compressor to purge the system of water upon shutdown.

   e. Five magnetic valves which open and close to allow water to be heated to thermostat (potentiometer) set temperature.

   f. A source input 3/4 in. male hose connection.

g. A hot water output 3/4 in. female hose connection (w/o valve).

h. A hot water return to source 3/4 in. male hose connection.

i. A thermostatically controlled defrost heater which defrosts system before startup of burner and/or water pump.

j. Three temperature sensors for regulating water temperature at various points of the system.

k. A control panel accessed from the top of the unit for controlling the field water heater functions.

l. Fuel for the burner comes either from the onboard fuel tank or from an external source connected by a hose to a 3-way fuel valve.

m. A chimney (stack/flue) with a spark suppressor stowed inside the stack stowage tube.

4. **Deployment Requirement**. Deploy in a non-explosive atmosphere. A minimum of eight people of any MOC are required for the deployment and recovery of the Field Water Heater. The Field Water Heater shall be maintained by a Vehicle Tech (MOC 129).

Applicable Publications

C-91-997-000/MB-001 ..... OPERATOR'S MANUAL

C-91-997-000/MS-001 ..... MAINTENANCE MANUAL

C-91-997-000/MY-001 ..... PARTS IDENTIFICATION LIST MANUAL

C-91-997-000/NP-001 ..... PERMISSIVE REPAIR SCHEDULE & STANDARD REPAIR TIMES

IDENTIFICATION

Equipment Identification

Manufacturer ..... DEW Engineering LLC

Model ..... Field Water Heater (FWH), Portable, 120V, 1 PH, 15 A, 60 HZ

Part Number 73148

Year of Manufacture 2013

Contract Demand (CD) Number W8476-091415/001/HL

Equipment Identification Number / NATO Stock Number (NSN) 4520-20-007-2055

Equipment Configuration Code FWH-001

Equipment Registration Number 91-997-000

Quantity Purchased 570

C-91-997-000/MA-001

TECHNICAL SPECIFICATIONS

Weight

Weight	185 kg (408 lb)

Dimensions

Length	1397 mm (55.0 in.)
Width	626 mm (24.7 in.)
Height	892 mm (35.1 in.)

Shipping Specifications

Volume	0.8 m³ (28.25 ft³)
Stacked Height (3 units)	2700 mm (106.3 in.)

Performances

Heat Capacity	11 Lpm (3.0 US Gpm)
Maximum Water Pressure	517.1 kPa (75 PSI)
High Temperature Limit	87°C (188.6°F)
Temperature Rise	0°C to 49°C (32°F to 120.6°F)
Air Compressor	Thomas, P/N 512902 (P/N 1177080-1 Modified to P/N 1177081-1)

Fuel System

Primary Fuel	DL-1, DL-2
Fuel Tank Capacity	70 L (18.5 US gal)
Max Fuel Flow	5.26 Lph (1.39 US Gph)
Pump Pressure	1103 kPa (160 PSI)
Nozzle Rating	Delaven, 4.16 Lph (1.1 US Gph), Type A 60°
Operating Time Without Refueling	Approximate mimimunm time of 16.8 hours @ Nozzle Rating of 4.16 Lph (1.1 US Gph)

Exhaust System

Type	Cylindrical stainless steel with spark suppression
Exhaust Stack Height	43.0 cm (16.9 in.)
Exhaust Stack Stowage	In the base beside the fuel tank

C-91-997-000/MA-001

Electrical System

Voltage .... 120VAC, 60 Hz
9.2 Amps Normal

Maximum Amperage Draw .... 12 Amps

Environmental

Starting-up Capability without Start-up Aid .... -40 °C (-40 °F)

Storage Temperature .... -51 °C to +70 °C (-60 °F to +158 °F)

ITEM 3 & 4

CAMFIRE Heater Specifications
MODEL MV125CG
MODEL MV 125DND

NSN: 4520-21-886-2954
NSN: 4520-01-550-7748

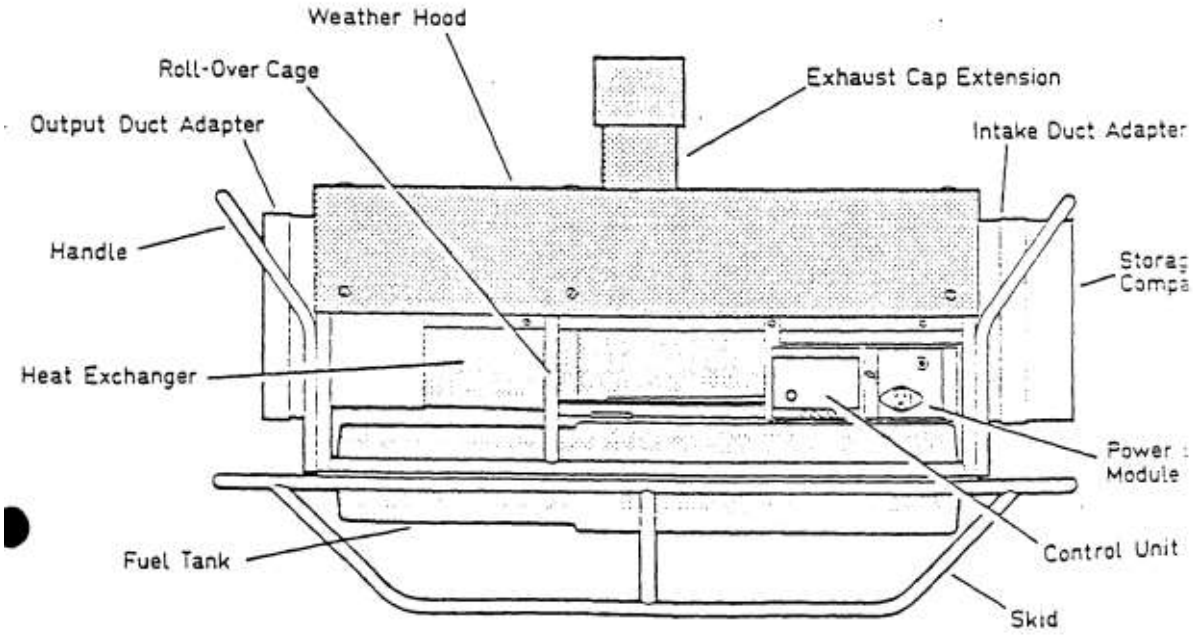

COMBUSTION CHAMBER, KEROSENE OR FUEL
OIL TYPE; INTERNAL PUMP FEED; 13.5 US
GAL.INTEGRAL TANK; ELECTRODE IGNI.TIONSKID
AND HAND CARRY; O/A DIM.50.000 IN.LG
NSN: 4520-21-886-2954 Item Name: HEATER, DUCT TYPE, PORTABLE
Unit of Issue: EA Price: $4,250.00
Accountability Code: B Quality Assurance: C
Special Supply Info: BA Shelf Life: 000
Supply Status Code: 90
RAE/A1C/SMC: 67J
Reparability Code: B
EAC: 30A1 8, 30A33, 30A39, 30A43, 30A56, 91146 BY 16.000 IN.W BY 25.000 IN.H,
1 HORIZONTAL
HEAT OUTLET W/12.000 IN.FLANGE FOR
DUCT ATTACHMENT; 1 SINGLE SPEED FAN, MAX
AIR FLOW 317.0 CFM; FUEL CONSUMPTION
0.64 GPH; STEEL INCLOSURE; USE HOSE
ASSY, NSN 4720-00-708-0407 HEATER
IS CLEAN AIR AND EXHAUST GAS IS VENTED

Input Heat Rating
BTU/Hour 90,000

Output Ratings
Clean-air Output, BTU/Hour 60,000
Volume, CFM (Approximate) 600

Other Ratings
Current, starting 6.5 AMPS
Current, running. 3.2 AMPS
Voltage 120 VAC
Frequency 60 Cycle
Fan/Pump Motor 1/4 HP
Air Pump Pressure 4.0 PSI

Fuel Nozzle
Meter Size 0.65 GPH
Spray Angle 80 DEGREES

Fuel Kerosene, DF1, DF2, Fuel Oil, JP8 Only

Tank Capacity 8.5 GAL

Duct (Refer To Venting Instructions)

Dimensions (Without Stack Extension) W15.5” L51” H25”
Weight (Without Fuel) 115 LBS

ITEM 5
HERMAN-NELSON Heater Specifications
MODEL BT400-80

NSN: 4520-21-911-9025

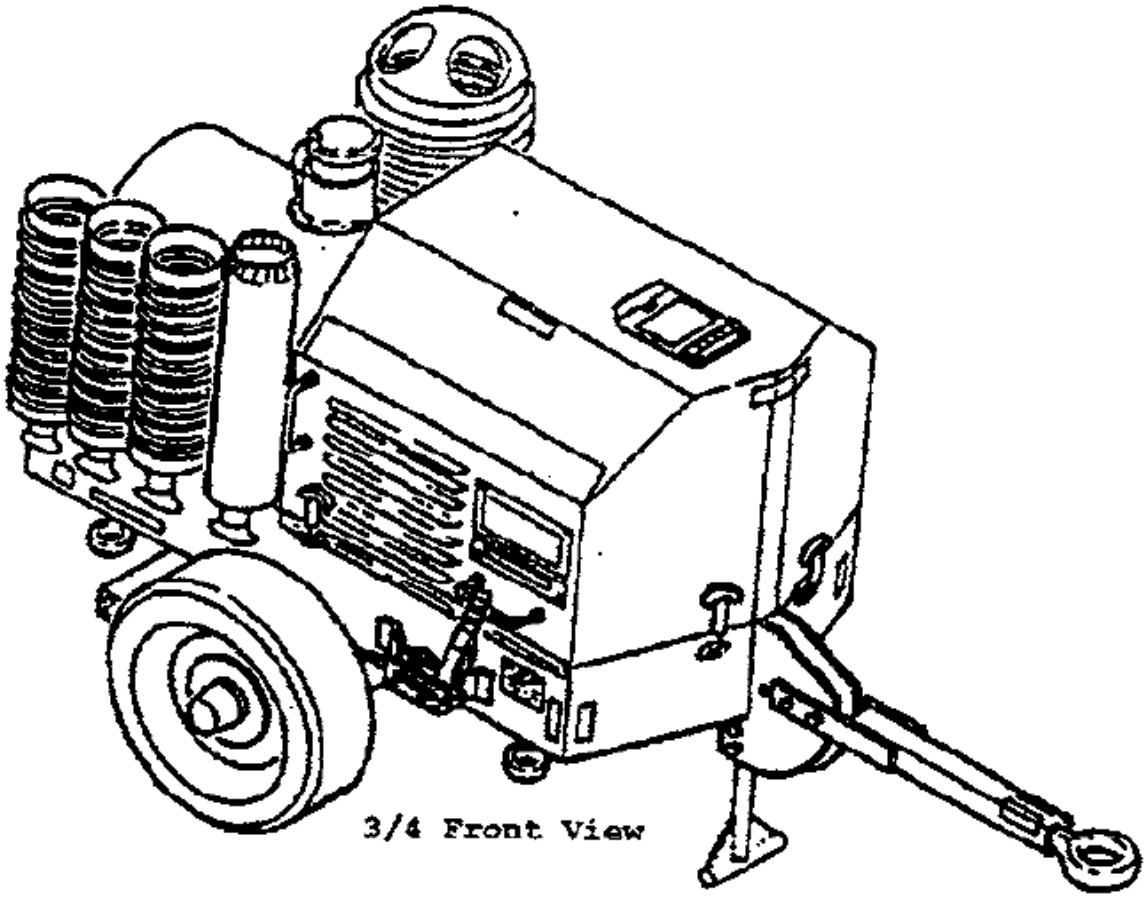

DMC: A
STATUS: Item is active
Date CGCS Established: 07-SEP-1994 STATUS Date: 07-SEP-1994
ITEM NAME: HEATER, DUCT TYPE, PORTABLE
Characteristic Reply
HEAT DELIVERY RATE 400000.0 BRITISH THERMAL UNIT
HEATING ELEMENT TYPE COMBUSTION CHAMBER
HEAT MEDIUM TYPE AIR
INTEGRAL FUEL TANK CAPACITY 35.0 GALLONS
FUEL TYPE DIESEL FUEL OIL
MOUNTING TYPE TRAILER
HEAT OUTLET QUANTITY 1

SPECIAL FEATURES

6 1/2 HP LISTER PETTER DIESEL ENGINE MODEL
AC1-11; SINGLE CYLINDER INDIRECT INJECTION
AIR COOLED DIESEL ENGINE RUNNING AT
36000 RPM; C/W ELECTRIC START; LIGHTED
PANEL; HAND SELECTED TEMP CONTROL
PANEL; HEATER DUCT CONNECTOR AT
DISCHARGE END FOR ATTACHING A 12.000 IN.
DIA BY 15.000 FT LG FLEXIBLE DUCT;OLIVE
DRAB COLOUR
USERS: DF
RNCC RNVC Reference Number NCAGE
3 2 BT400-80 38529

CFSS Management Data
Stock Type: A
Stock Classification: X
IM Advisory: 1R
Tracking Indicator: Q
Repairability: G
Entitlement Checking: YES
Batch Lot Managed: NO
Shelf Life (Months): 0
Quality Assurance: Q
Supply Manager: 67J
TA: L33L
Unit of Issue: EA
Unit Price: $6,184.21
ERN Xref Data - from MASIS - Current use 91153000(00001)

Model BT 400-80
Heated Air output :

Maximum	400,000 BTUH @ -65°F ambient
Minimum	100,000 BTUH @ 70°F ambient

Heated Air Temperature Range:

Maximum	280°F (138°C)
Minimum	150°F (65.5^{o}C)
Nominal Air Delivery Rate:	1500 CFM @ 280°F

Fuel Mil.Spec MIL-J-5624	
	Fed. Spec VV-F-800
	Or MIL-T-83133
Fuel Tank Capacity:	35 Gallons (nominal)

Overall Dimensions

Length	68-1/2 inches
Width	44 inches
Height	51-1/2 inches
Weight (dry)	800 lbs

Prime Mover (Diesel Engine	6.5 HP

Engine Speed, Factory Set	3600 RPM
Fuel Injection by Timing (spill)	
3301 to 3600 rev/min	33° before TDC

ANNEX "B"

LOGISTIC STATEMENT OF WORK FOR REPAIR AND OVERHAUL OF FIELD HEATERS

1.0 GENERAL INTRODUCTION

1.1 AIM

The Department of National Defence (DND) has a requirement to sustain the fleet of Mobile Light Tower (MLT) as detailed in the Annex A, Technical Statement of Work (SOW). The Contractor shall repair and overhaul only those items for which he has received authorization IAW the Selection Notice and Priority Summary (SNAPS) for Repairable Materiel Account (RMA) code(s) TBD for the NSNs as identified in Appendix 1 to Annex A, Technical SOW. The Contractor shall conform to such supply procedures as are advised in this Logistical Statement of Work (SOW) related to the management of DND equipment and stores in his possession. Repair and Overhaul priorities will be maintained as advised in the SNAPS.

This LOG SOW is to be read in conjunction with the A-LM-184-001/JS-001 for additional information.

This section will describe the system of record for use by DND (DRMIS). It will explain the various Supply Accounts/Plants/ Storage Locations (SLOCs) that all contractors must use and the different types of spares involved.

DRMIS Defence Resource Management Information System**:** provides total asset visibility of all Canadian Forces (CF) materiel, whether it is in use, in stock, or on a repair line. As a fundamental policy, all supply transactions and movement of materiel must be visible and traceable. All transactions for goods movements must be supported by appropriate computer transactions. The contractors' responsibilities related to management of the accounts in DRMIS are explained and outlined below. Contractors having access to DRMIS must process required transactions as instructed in this publication. NDQAR must assist those contractors with no DRMIS access and must provide detailed instruction, guidance and training on DRMIS transaction processing and on DRMIS account management to all contractors.

RMA (Repairable Material Account): is an account that must be allocated to the contractor to hold the authorized material for repair that is approved on the contract. The RMA is represented within the system by a three alpha character format followed by a number "1" e.g. "WAL1". There must be two storage locations (SLOC) allocated. One is a Serviceable storage location and the other being an Unserviceable Storage Location.

CIS (Contract Issue Spares): CIS are DND-owned materiel issued to R&O contractor facilities for incorporation into DND equipment undergoing repair, overhaul and modification. This material is catalogued and is in DND inventory. This inventory must be managed in a Contractor Repair Parts Account (CRPA). Catalogued serviceable spare parts salvaged by the contractors on NDHQ authority are included. Prior to approval of the CIS being issued to a contractor the Procurement Authority must ensure:

- All spare parts issued to a contractor as part of CIS are to be catalogued and are visible in the system of record, DRMIS, for National Defence.

- DND stocked inventory is to be used prior to contractors procuring commercially. There are exceptions to this rule and the procurement authority has to authorize this procurement and justify why DND stocked inventory is not being used first. For instance, there may be spares reserved for other operations and may not be available to use as CIS or it may be more economical for DND to allow commercial procurement, Contract furnished materiel (CFM.)

- DND is prepared to accept the scheduled risk consequential to the late delivery of CIS from DND supporting facilities (CFSD).

CRPA (Contractor Repair Parts Account): DRMIS provisioning account with a Serviceable and an Unserviceable storage location. It records all managed spare parts pre-propositioned within that CRPA Plant/Serviceable Storage Location. The spares are located at the Contractor's repair facility and are to be used to assist on the repair of the repairable items contracted out for repair. These spares are called Contract Issue Spares (CIS) because they are DND spares issued to the contractor in order to affect the repair or overhaul of DND equipment.

GFOS (Government Furnished Overhaul Spares):

- Non-catalogued spare parts that are salvaged by the contractor, on NDHQ authority, from DND materiel undergoing repair, overhaul, re-life or modification.

Refer to the Supply Support Section 8.2.6 in the A-LM 184-001/JS-001 for more information on GFOS.

GFE/GFI:

- **Government Furnished Equipment (GFE)** is DND-owned equipment provided by DND to a contractor, on a loan agreement, to be used during the contract period and returned in essentially the same condition (subject to fair wear & tear) at the end of the contract. The equipment included in GFE is any equipment used in the production process, such as machine tools, special production tooling, tooling, ground handling equipment, and any other items or equipment that are considered to be in the best interest of DND. It can include any equipment used in testing process, such as prototypes, sealed samples, models, and any other items or equipment. The equipment NOT normally included in GFE is: materiel to be consumed or used in the manufacture or maintenance process, or materiel that will be used for any purpose that would prevent it being returned in substantially the same condition as when loaned, subject to fair wear and tear.

- **Government Furnished Information (GFI)** is any information that DND will provide, on a loan agreement, to the contractor to enable contract fulfillment. This normally includes items such as DND specifications, NATO (North Atlantic Treaty Organization) codification requirements, and Technical Data Packages (TDP).
  Refer to the Supply Support Section in Section 8.4.1 and Annex F in the A-LM-184-001/JS-001 for more information on the loan of GFE/GFI.

1.2 EXTENT OF WORK/TYPES OF EQUIPMENT (Mandatory)

The Contractor must repair and overhaul only those items for which they have received authorization. This authority is in accordance with the Selection Notice and Priority Summary (SNAPS).

The DND equipment to be repaired are categorized as:

- **Selected Equipment:** "A" accountable equipment's/components that have received authorization for repair or overhaul and appears on the Selection Notice and Priority Summary (SNAPS) for a Repair Materiel Account (RMA).

The Contractor must monitor and ensure that the total costs of the overhaul remain within the approved Maximum Repair Cost (MRC).

The contractor must ensure that storage and maintenance facilities provide sufficient protection to DND material to minimize the risk of:

- Unauthorized use;
- Theft or misappropriation;
- The elements including special handling requirements for sensitive and shelf-life items;
- An excess of dust and dirt;
- A possible breach of security; and
- Animal droppings and infestation.

1.3 REPAIR &OVERHAUL (IN AND OUT OF COUNTRY) PROCESS

Refer to Annex B in the A-LM-184-001/JS-001 for step by step Process Flowchart. The process flowchart describes who does what in the repair process.

2.0 RECEIPTS (Mandatory)

Upon receipt of DND equipment for repair, the Contractor must:

- Identify the equipment and ensure they are authorized to repair (SNAPS or Email);
- Open a separate work order for each reparable “E” tracked item. For remaining items, a work order is created for each line item reflected by the shipping paperwork;
- Carry out a physical check to ensure that the item is complete and is in accordance with the accompanying vouchers;
- Complete receipt documentation, including any adjustment transactions or work order number;
- Carry out a physical check to ensure that the item is complete according to latest OEM specifications; and
- Action warranty materiel. (If warranty repair required refer to Section 9 in the A-LM-184-001/JS-001).

Note: DRMIS Receipt and Work order must be raised within 48 working hours of delivery to plant (see exception for Major Equipment). The contractor with no DRMIS access must contact NDQAR advising that the item has been received for repair and obtain the DND Work Order. The turnaround time begins once the DND Work Order is created.

Based upon available information or inspection of the item, the Contractor must determine the extent of work required, prepare a cost estimate, and if cost to repair is below the Maximum Repair Cost (MRC), proceed with the repair. Whenever the cost to repair threatens to exceed the MRC, the Contractor must request authority using a SNOM (Selection Notice Observation Message)/email to proceed with the repair in accordance with Annex D in the A-LM-184-001/JS-001.

Where it is impossible to determine the cost to repair, the Contractor may be granted authority by the Procurement Authority (PA) to strip the equipment so as to assess its repair or overhaul potential and to estimate the cost. Unless otherwise specified, and regardless of the value of the equipment, the cost of the work involved in estimating repair is chargeable to the item whether or not it is subsequently repaired.

2.1 DISCREPANCIES IN SHIPMENTS (Mandatory)

Discrepancies are reported to the NDQAR and they are to contact the consignor. A discrepancy in shipment can consist of any of the following:

- Quantity;
- Serial/Equipment Number;
- Substitute material;

- Improper Packaging;
- Condition

The Contractor must contact their supporting NDQAR to report and action discrepancies in shipments. If the discrepant item is one of the commodities listed below the supporting NDQAR must be contacted within 24 hours. The supporting NDQAR must then ensure Controlled Goods loss procedures are followed and the loss is reported to CTAT office within 48 hours of discrepancy.

Commodity:

- Weapons, Ammunition, Explosive Ordinance, Self-Contained Weapons Systems, and Guided Missiles;
- Classified Equipment including Crypto and accountable COMSEC Materiel;
- Deficient Controlled Goods as defined in DAOD 3003-0; and

3.0 WORK CONTROL(Mandatory)

The Contractor must ensure that the repair of all DND equipment is controlled by an internal serial numbered work order. Upon completion of work, the work order must include as a minimum the following:

- a contract serial number against which all costs incurred are chargeable;
- the MMR, description, quantity and serial number, if any, of item repaired;
- a cross reference to all Supply Documents. This includes receipt, issues and returns, including scrap activity, finalization of repair, inspection, and final acceptance;
- reference to the applicable technical data;
- details of the work performed;
- a list of all the parts, by part number and description, found unserviceable and requiring repair or overhaul, ensuring that the repair scheme is referenced;
- a list of parts used in repair, identifying the type of stores from which they were issued (e.g. CIS, GFOS);
- repair cost estimate; and
- the identity of the person opening the work order.

The Contractor must provide to the NDQAR, and as necessary amend, a list of Contractor personnel authorized to open work orders. A work order must be opened for each repairable “E” tracked item (refer to Section 8.5.10 in the A-LM-184-001/JS-001 for the definition.) For remaining items, a work order is created, for each line item reflected by the shipping paperwork.

3.1 COMPLETION OF WORK(Mandatory)

On completion of Repair or Overhaul, the Contractor must transfer the material from unserviceable Storage Location or Work Order to the serviceable Storage Location.

The following "Contractor Certification" must be stamped on the Supply Document and the DND 2227 and signed.

Contractor Certification

I certify that the item(s) listed above have been inspected, tested and conform to all specifications and requirements detailed in the contract or purchase order.

Signature _____ **Date** _____

(Contractor QC)

Once the DND 2227 is signed and stamped on completion of work by the contractor it is sent to the NDQAR Supply Tech with the DRMIS job ticket (DRMIS Work order printout) and they finalize the closure of the work order process and the shipping process. The contractor must keep a copy for audit purposes. An additional copy of the DND2227 (signed and stamped) would be required to be attached with the item in the shipment. For Contractors with DRMIS access, they are not required to send the DND 2227 to the NDQAR but are still required to have a copy filed for audit purposes.

3.2 STOP REPAIR ACTION(Mandatory)

Upon receipt of an updated SNAPS indicating Stop Repair Action, the contractor must action the Repairable as per the Instructions supplied. This applies to all stoppage of repairs for:

- SRD (Stop Repair Delete: when an MMR is removed from SNAPS and repair line is closed);
- SRT (Stop Repair Transfer: when an MMR is removed from SNAPS and new repair line is opened; and
- Repairable Reserve (00RR) MMR is not removed from SNAPS and repair line is suspended.

The Contractor/NDQAR must identify all outstanding Work Orders. If the Contractor is authorized by the PA to finish the repair work against the outstanding Work Orders, he must complete these Work Orders.

If the contractor is not authorized by the PA to finish the repair work against the outstanding Work Orders, he must close the Work Orders, and return the unserviceable items as per direction on PAL.

Note: In the case that work was authorized and the contractor was advised to stop, the contractor must be paid for the work done up to that point.

4.0 ANNUAL REPAIR FORECAST - SNAPS (As applicable on an exceptional basis)

The Contractor must notify the PA when the receipt for a selected repairable line item exceeds the current (fiscal) year forecast (CYF) in the SNAPS report. The CYF is the quantity of items the contractor is authorized to repair from the 1st of April to the 31st March. The Contractor must not repair the line item until written approval is received from the PA or the SNAPS forecast is amended.

The SNAPS report is designed to show all MMRs which are selected for repair to that RMA/SLOC, the Maximum Repair Cost (MRC) and the 24-month forecast of arising's. The information on the SNAPS plus the R&O contract provides the contractor with the authority to repair.

NDQAR must distribute the SNAPS for in-country repair facilities on a monthly basis. The contractor must be advised of the selection of a new MMR item or of changes to the current SNAPS.

A MMR annotated with a repair priority code (RPC) "routine" or higher on the SNAPS are to be repaired in accordance with their "Priority" unless otherwise advised. MMRs annotated Repairable Reserve (RR) must not be repaired unless the repair is already in progress. RR items awaiting repairs must be returned to regional depot.

If R&O contractors need to make observations on information contained in the SNAPS, they are to submit their observations to the PA using the Selection Notice Observation Message (SNOM). See Section 8.6 in the A-LM-184-001/JS-001 for reasons to use the SNOM.

The contractor is responsible for scheduling work. Within these categories, the principle of “First in-First out” (FIFO) must apply. To assist in this scheduling, DND must provide each contractor with a copy of the SNAPS report that lists the Repair Priority of each item on the selection list. The Repair Priority Codes (RPCs) are as follows:

C: Critical 0 - 3 Months of Serviceable assets available

U: Urgent 3 - 6 Months of Serviceable assets available

R: Routine 6 - 24 Months of Serviceable assets available

P: Pending 24+ Months of Serviceable assets available

5.0 COST CONTROL(Mandatory)

The Contractor must monitor the cost of each repair to ensure that total repair costs remain within approved limits. Appropriate management control procedures must be in place and records maintained. These control procedures and records must be available for review or audit on request.

While undergoing repair, total cost must be monitored to determine whether or not to continue the repair. The terminology associated with cost often varies among different organizations even though the intent may be the same. To ensure better understanding, the following terms are to be used when dealing with DND equipment:

- Cost Control: the use of management devices in the performance of any necessary operation so that pre-established objectives of quality, quantity and time may be attained at the lowest possible outlay for goods and services. Such devices include a bill of materials, instructions, standard of performance, competent supervision, cost limits on items and operations, studies, interim reports, and decisions based on these reports;
- Average Repair Cost: true cost pro-rated over the number of items produced in a time period;
- True Cost of Repair: the total cost of repair or overhaul in plant or by subcontract including all labour charges, overhead, and all materiel spares costs, sub-contracting and shipping (by spares type with their applicable profit mark-ups or embodiment fees;
- Maximum Repair Cost (MRC): the MRC is a standard established by DND to guard against the possibility of an item being repaired at a cost that exceeds its replacement value to DND. The MRC is the maximum amount including all labour, sub-contracting and shipping, materiel costs and administration fees that the Contractor or DND repair facility is authorized to spend to repair an item. It is not the cost DND necessarily intends to pay for all repairs.

Note: In circumstances where the final cost of repair will exceed the MRC, contractors are required to cease repair and report complete details to the PA using the SNOM via email and informing NDQAR. The SNOM/email must provide full disclosure of all costs where the final cost has exceeded the MRC. DND will not pay costs which exceed the MRC without prior authorization.

6.0 COSTING RECORDS(Mandatory)

The Contractor must prepare forms and maintain records which must provide:

- a cost listing, by serial number if applicable, of each item or job lot going through the repair line;
- details of the extent of work carried out, in-process inspections completed and materiel embodied at any stage of the repair process;
- the average cost of repair or overhaul, by MMR; and
- the total repair cost for a MMR, by work order.

Note: This data must be provided as requested by the Procurement Authority and/or NDQAR accordingly.

7.0 MAINTENANCE SUPPORT- MINOR REPAIRS (Mandatory)

If DND supplied parts are urgently required to affect delivery of repairable components and are not immediately available from DND, then minor repair may be carried out to the unserviceable part by the Contractor, as approved by the PA who must advise NDQAR accordingly.

7.1 MOBILE REPAIR PARTY (MRP) (As Applicable)

If requested, the Contractor must submit two (2) copies of a monthly progress report covering MRP activities to the Procurement Authority. The level of detail and format must be stipulated in the individual DND 626 tasking should such a report deemed to be necessary.

7.2 EQUIPMENT TURN AROUND TIME (TAT) (Mandatory)

Unless specifically identified within the contract, equipment turn-around-time (TAT) to a serviceable state must be achieved in 90 calendar days. TAT is defined as the period of time from date of receipt to date item is reported serviceable. Repair priority is governed by the SNAPS. The principle of first-in/first-out (FIFO) must be observed whenever possible.

7.3 PRIORITY REPAIR REQUEST (PRR) (Mandatory)

A Priority Repair Request (PRR) is a direction to the contractor to repair an item on a priority basis. These requests originate from NDHQ/Supply Managers (SM) or PA and are communicated to NDQAR by e-mail. The SM or PA forwards the information to the contractor for action. A sample copy of a PRR format is illustrated in Annex E in the A-LM-184-001/JS-001.

On receipt of a PRR, the contractor is to determine whether DND's required delivery date (RDD) can be met. If not, the contractor is required to provide to the appropriate Supply Manager or PA at NDHQ with a realistic estimated delivery date (EDD). The format of the e-mail/fax to be forwarded by the contractor is illustrated in Annex E in the A-LM-184-001/JS-001 using the PRR format. Correspondence in response to PRRs is the contractor's responsibility.

Unless otherwise specified in accordance with the contract, overtime may be authorized by applicable EPM through the NDQAR. However, overtime must not be authorized to clear any backlog resulting from unsatisfactory contractor performance.

7.4 SPECIAL INVESTIGATIONS & TECHNICAL STUDIES (SITs) (Mandatory)

When authorized by the Procurement Authority via a Task Authorization/DND 626, the Contractor must open a work order to undertake special investigation and technical studies and must provide relevant data to these investigations as and when required. The scope of work normally covered under special investigation and technical studies is to cater for equipment not meeting fit, form and function specification standards or due to repetitive failures. This excludes studies or investigations which have or will have fleet fitment application.

7.5 TECHNICAL INVESTIGATIONS & ENGINEERING STUDIES (TIES) (Mandatory)

When authorized by the PA, via a Task Authorization/DND 626, the Contractor must undertake technical investigations and engineering studies. This activity includes the provision of system and maintenance support and management services. It includes the requirement analysis and planning to ensure current reliability availability of specifications can be met, the scheduling of maintenance, the identification of spares and support, as well as the development of policies and maintenance

procedures. It includes the contract management activities as well as the validation/acceptance of deliverables when maintenance activity is contracted.

7.6 CONTRACT CLOSE OUT (Mandatory)

When an R & O contract is not extended, or cancelled by mutual consent or terminated for convenience or by default, the Procurement Authority must form a Contract close-out planning team to provide the contractor with instruction for the completion of the work already on the repair line and to provide instruction and to coordinate the transfer of DND-owned equipment. The DQA/R&O staff must be included in the close out team. The following are some considerations for the close-out plan:

- Repairable material in the custody of the contractor;
- Spares in the custody of the contractor;
- Tooling and test equipment on loan;
- Publications and other documents;
- Perform 100 % stocktaking;
- Set Max/Min to zero (stop automated replenishment) and change MRP setting to non-replenishment;
- Clear all pending DRMIS transactions;
- Issues spares and repairable to new repair contractor Plant/SLOC or depot as per the PA directions; and
- NDQAR to provide all stock on hand/dues and pending transaction reports.

8.0 SUPPLY SUPPORT/SUSTAINMENT SUPPORT (Mandatory)

8.1 TRANSACTION DOCUMENTATION (Mandatory)

The DND 2227 is the supply document used by all contractors when performing supply related transactions.

The Contractor must file and retain auditable transaction documentations by applicable Storage location/account either by MMR or by Requisition Number:

8.2 CONTRACTOR SUPPLY ACCOUNTING (Mandatory)

8.2.1 RMA

When a Contractor is awarded a contract for the repair or overhaul of DND materiel, a Storage Location (SLOC)/Repairable Materiel Account (RMA) code must be allocated to the Contractor and represented within the system by a three Alpha SLOC character format followed by a Number “1” e.g. “WAL1”. It must have a Serviceable and Non-Serviceable Storage Location (SLOC). All pre-authorized repairable materiel shipped to that contractor must be identified and documented on the Selection Notice and Priority Summary (SNAPS) for the associated RMA. This is known as “selected” material.

In many circumstances, a contractor will need spare parts from DND. These spare parts are called Contract Issue Spares (CIS) or GFOS and the contract must specify what spares to be used. To account for the CIS, the contractor must be allocated a Contractor Repair Parts Account (CRPA). Account structure can be found in Annex H in the A-LM-184-001/JS-001.

8.2.2 CRPA/CIS (Contract Issued Spares)

Contract Issued Spares are DND-owned materiel issued to Contractors exclusively for use on the repair line in support of DND equipment. DND must authorize Contractors to use or request CIS when spare parts are catalogued, and managed in DRMIS using a CRPA account.

Note: CIS is also catalogued salvaged parts from R&O activities.

Prior to approval of the CIS being issued to a Contractor, the PA must ensure:

- Initial Max and Min levels are set by DQA R&O (where applicable) on the authority of the PA for MMR's held on a CRPA. Subsequent amendments to levels must be actioned by NDQAR/ Contractor upon PA approval;

- DND stocked inventory is to be used prior to contractors procuring commercially. There are exceptions to this rule and the PA has to authorize this procurement and justify why DND stocked inventory is not being used first. For instance, there may be spares reserved for other operations and may not be available to use as CIS or it may be more economical for DND to allow commercial procurement, contract furnished material (CFM); and

  - DND is prepared to accept the schedule risk consequential to the late delivery of CIS from DND supporting facilities. Deviations to the foregoing may be acceptable in the following circumstances and if authorized by the contract authority: • Urgent operational requirements may justify the use DND inventory even though the spare part would normally be obtained by the contractor through other means.
  - Safety considerations may require the use of DND inventory.

8.2.3 CIS MATERIEL RECEIVED OFF CONTRACT/PROCUREMENT

Receipts of CIS material from a purchase order that was generated by normal spare parts demands or pushed by the Supply Managers directly to the Contractors must be performed by the supporting NDQAR.

8.2.4 ORDERING/RECEIVING CATALOGUED CIS IN DRMIS

To order CIS in DRMIS the Contractor originates a requisition using Work orders as detailed in the DRMIS process model. When parts are required to replenish stock in the CRPA warehouse the max/min levels will automatically replenish the CRPA. If no max/min levels are set, parts can be manually replenished through DRMIS spare parts demand process. For all HPR requirements, input a requisition with a priority code 1 with a RDD date within 1 to 6 days.

For all other non HPR requirements see Priority Code List below.

- Priority Code 1 Operational Critical RDD of 1 to 6 days
- Priority Code 2 Essential RDD of 7 to 14 days
- Priority Code 3 Routine RDD of 15 to 30 days
- Priority Code 4 System Replenishment Redistribution RDD system default to 30 days

8.2.5 GFOS: Government Furnished Overhaul Spares

Government Furnished Overhaul Spares (GFOS) are non-catalogued spare parts that are salvaged by the Contractor, on PA/NDQAR authority, from DND materiel undergoing repair, overhaul, re-life or modification. GFOS must be accounted for by the contractor electronically or a manual stock record system.

GFOS salvaged by Contractor, received from external sources and initially entering the system are to be brought on as an un-forecasted receipt by the contractor using the CRPA Serviceable Storage Location. A DND 2227 must support this transaction. The DND 2227 must be signed and approved prior to processing the transaction

The contractor is responsible for accounting of the GFOS to the repair operation, maintaining custody of the item and disposing of the item. See Disposal Model at Annex R in the A-LM-184-001/JS-001 for step by step instruction. The Technical Authority is responsible to provide all disposal instructions.

The contractor establishes a price for the GFOS item. Price will reflect contract price or book value. The Procurement Authority is the final authority on the pricing.

If a GFOS item needs to be repaired so it can be utilized in the repair of a main catalogued item (repairable), a work order must be opened against the main catalogued item, and all catalogued components must be issued into this work order thus ensuring the cost of the GFOS repair must be charged against the repair of the main catalogued item. Refer to Annex A in the A-LM-184-001/JS-001.

The contractor is responsible for maintaining stock records for both repairable and serviceable GFOS. The contractor does not establish the re-provisioning levels. GFOS stock must be reduced to the lowest level possible.

There is a continuing need to guard against the build-up of catalogued materiel in GFOS inventory. The contractor must establish and maintain a stock control (inventory control) section for GFOS.

All catalogued MMRs found in GFOS stores, must be converted to CIS and brought on charge to the CRPA using the step by step process in Annex T in the A-LM-184-001/JS-001 for stock adjustment with a DND 2227 to support the transaction.

The contractor must determine which items of GFOS are no longer fit for use by DND. Examples of such material are:

- Batch considered contaminated;
- Items rendered unusable because of corrosion attributable to factors beyond the control of the contractor or Complete inability to establish serviceability at a viable cost, etc.;
- Items that fail to meet the quality assurance standards;
- Material unfit for use because of unserviceable conditions; and
- Shelf life expired.

For the items listed above the contractor must remove these items from stock and prepare a DND 2227 to correct their stock record accordingly.

8.3 MANAGEMENT OF DND-OWNED SPARES (As Applicable)

Spares must be used in the following order or as specified in the contract:

- Government Furnished Overhaul Spares (GFOS);
- Contract Issue Spares (CIS); and

8.4 SPARES REVIEW (As Applicable)

In conjunction with the two year stocktaking schedule, the Contractor must carry out a review of CIS and GFOS to determine if holdings of any particular item:

- Exceed the economic stock retention level. The level is normally equal to an estimated four (4) months stock;
- have become surplus to requirements as a result of a modification, disposal, obsolescence or transfer of the major equipment;
- are no longer fit for use in the R&O of DND equipment;
- if GFOS is catalogued then transfer to CIS.

The contractor is responsible for accounting of the spares to the repair operation, maintaining custody of the item and disposing of the item. See Disposal Model at Annex R in the A-LM-184-001/JS-001 for step by step instruction. The Technical authority is responsible to provide all disposal instructions.

8.4.1 LOANS/GFI/GFE

The Contractor must submit to the PA all requests for GFE (Government furnished equipment)/GFI (Government furnished information). DND will loan GFE/GFI to a Contractor only when it is considered to be in the interest of DND to do so, under the conditions that:

- The equipment is available and loaning it will not jeopardize DND operations; and
- Loaned equipment may be recalled at any time that DND requires it without penalty.

Contract must have GFE/GFI Clause (Government Property Clause accepted also.) If not, amendment must be done prior to any loans related transactions are completed. Loan Agreement must be signed prior to any loans related transactions being completed. Some delays may occur and are to be expected i.e. signatures, SLOC creations, stock availability.

The PA is responsible to assist Contractors with their application and to maintain a record of loans for each applicable Contractor:

- No stock movement (Issues & Returns) is to be done without going through the PA and DQA Loans first;
- Contractors must not submit requests directly to DQA Loans; they must go through PA every time;
- Contractors are not allowed to process any loans transactions. Only the Loan section in DQA is authorized to do any transactions against loan accounts.

Contractor responsibilities:

- Account for DND supplied equipment;
- Hold equipment in a secure area; and
- Carry out 100% stocktaking at least every two years; or • More often on the items that require more control (3 or 6 months); or
  - On closing down of the activity; or
  - On termination of the applicable Contract(s); or
  - Any event or series of events, which, in the opinion of DND, warrants such action.

When the loaned materiel is no longer required or upon termination of the loan, the Contractor will:

- Arrange for the return of the equipment to DND through the PA, in writing, in accordance with the terms and conditions stipulated in the contract and/or the loan agreement; and
  - Provide a copy of the advice to the NDQAR. The advice must include: • Description of the items;
  - Identification number/Stock Code; and
  - Condition/Serviceability of the item.

  Check the equipment for condition and quantity, and prepare it for return accompanied with a CF 942 (with the help of the NDQAR, if necessary);

If the loan is NOT supported, the PA must inform the Contractor and provide justification. DND does NOT normally loan equipment to a Contractor if it:

- Would seriously disrupt military training and operations;
- Could be subject to misuse or depreciation;
- Necessitates unwarranted expenditure of defence funds such as but not limited to cost associated to transportation, materiel handling, packaging, etc.;
- Is reasonably available from commercial sources or other facilities; or
- Creates an unfair advantage for any Contractor.

8.5 STOCKTAKING

The PA working with the supporting NDQAR must initiate and have the contractor carry out a one hundred per cent (100%) manual stocktaking of in country RMAs, and CRPAs, as well as, CIS, GFOS and Loan Accounts must be counted at a minimum of once every two years or as indicated by Cycle Count Indicator, in accordance with Section 3.4 of the SAM, A-LM-007-100/AG-001. The PA is responsible to monitor all stocktaking activity working with NDQAR. Refer to Annex L in the A-LM-184-001/JS-001 for step by step Process.

In the event of discrepancies between the DRMIS and the Contractor's records, DRMIS is the source record. DGMSSC is responsible for conducting random stock verifications of DND owned materiel and equipment as part of its mandate and in support of OAG audits. In order to carry out these stock verifications the contractor must provide DGMSSC personnel with access to the DND owned materiel and equipment being held.

8.5.1 Stocktaking Process

- Verify stock integrity. This is measured by comparing DND Owned material held under the Contractor's responsibility with all records and documentation;
- Adjust the associated records or documents according to the materiel held;
- Investigate discrepancies; and, if required,
- Action write-off reports in accordance with Section 3.5 of the SAM A-LM-100/AG-001.

8.5.2 Contractor Responsibilities

- Identify any discrepancies in stockholdings versus stock records;
- Initiate and complete stocktaking IAW the stocktaking plan;
  Note: Some repairable items, because of their material types may require stocktaking on a more frequent basis. (Refer to Annex I in the A-LM-184-001/JS-001);
- Contact the NDQAR to adjust stock records ensuring that the quantity on stock records is reconciled with the quantity on hand;
- Investigate discrepancies as requested by NDQAR;
- Conduct investigative stocktaking upon DND's request;
- Verify serial numbers; and
- Hold all transactions from the cut-off date until completion of the stocktaking. Local co-ordination will be required to ensure which transactions were not processed by the cut-off date because of mail delays, machine downtime, etc. in order for them to include these transactions when doing the stocktaking and reconciliation.

Refer to Annex L, in the A-LM-184-001/JS-001 for step by step process to carry out stocktaking at a contractor facility. The supporting NDQAR must assist in the stocktaking process for contractor facilities.

8.5.3 Investigative Stocktaking

The Contractor must initiate an investigative stocktaking no later than 48 hours after a discrepancy is found or reported, or is suspected either for a single or a range of MMRs or part numbers. The Contractor must investigate discrepancies identified by the NDQAR and if such discrepancies are not resolved, notify NDQAR for further action. NDQAR must determine the action to be taken to adjust the quantities and to report overages or deficiencies using a write-off report, or request reimbursement from the Contractor for shortages, depending on the circumstances.

In instances where the stocktaking indicates that the Contractor's inventory management system is inadequate, DND must request that improvements be implemented. Failure to rectify these problems over a period of time may result in cancellation of the contract with cause.

Note: The contract authority must receive all DND requests for financial recovery or other action against the Contractor.

8.5.4 Stocktaking Plan
No later than two (2) months after contract award and every year thereafter, on or before the first of March, the Contractor will be responsible to prepare and submit to the PA and the NDQAR, a two-year stocktaking plan. The stocktaking plan must provide information on the Contractor's planned stocktaking schedule for the next two year period, calculated from the time responsibility of DND Owned material has been assumed. The Contractor must ensure that 100% of the DND Owned material is planned to undergo stocktaking at least one time during this two year period or more frequently as dictated at Annex I in the A-LM-184-001/JS-001. The Stocktaking Plan template is attached at Annex J in the A-LM-184-001/JS-001.

The Contractor must distribute a copy of the Stocktaking Plan to the Procurement Authority and the NDQAR for review and concurrence. The Contractor must not initiate any 100% stocktaking unless PA approval has been given. Once the approval has been given NDQAR must provide further directions on using the applicable reports to provide visibility of material into Work Orders.

Changes to the stocktaking plan must be submitted to the PA, through the NDQAR, for approval.8.5.5 Scheduled Stocktaking Notice

Two weeks prior to the planned stocktaking start date, the Contractor must send a Stocktaking Notice to the NDQAR, advising of the scheduled stocktaking. The Stocktaking Notice must also direct the NDQAR to produce Count Sheets for the materiel maintained and held in the (serviceable and unserviceable storage locations) for the RMA, CRPA and, Loan storage location.

The Stocktaking Notice submitted to the NDQAR must include the following:

- Storage location (Serviceable or unserviceable);
- Date the first stock count must be completed; (must be 15 days, refer to Section 8.5.7 in the A-LM-184-001/JS-001);
- Range of MMRs to be counted.

If the materiel is not on charge (GFOS) in DRMIS the Contractor must also include the following details with the Stocktaking Notice:

- Date information extracted;
- Account Type (GFOS, Loans);
- MMR;
- Part Number;
- Description;
- Unit of Issue;
- Unit Price;
- Qty. (held in Contractor accounting system);
- Inventory Category Code;
- Location; and
- Serial Number if directed by NDQAR.

Stock movements and stock transactions that could affect computer or manual record balances must be stopped or reduced to the minimum from the time the count sheets are produced by DRMIS until the count sheets are populated and confirmed; or any other system used by the Contractor to manage its inventory. If during the stocktaking, stock transactions that affect

computer or manual record balances cannot be stopped, the Contractor is required to keep track of all transactions on a separate register.

8.5.6 Count Sheets

One day prior to the start date reported on the Stocktaking Notice the Contractor must receive count sheets from the NDQAR for inventory recorded in DRMIS.

For GFOS (inventory not recorded in DRMIS) the Contractor must produce count sheets using their own system. The Contractor must provide a copy of the count sheets to the NDQAR. The count sheets must, at a minimum, contain the following:

- MMR or/and Part Number;
- Description;
- Stock location;
- Condition/Status recorded; and
- Qty. counted (to be filled-out on materiel count)

8.5.7 Stock Count

The Contractor must carry out the first stock count of all materiel and report quantity on first count sheets within fifteen days. Materiel found not listed on the count sheets must be identified and reported on a separate count sheet.
The Contractor must submit a copy of each completed first stock count sheets to NDQAR. Refer to Annex K in the A-LM-184-001/JS-001 for count sheet template.

8.5.8 Report and Resolve Stocktaking Discrepancies

8.5.8.1 For inventory recorded in DRMIS

The NDQAR is responsible for entering the stocktaking counts into the system of record. They must confirm all the counts, in accordance with the count sheets. For discrepancies, the NDQAR must submit to the Contractor a list of all MMRs and identify the materiel requiring a second count. If necessary, this process can be repeated for a third count which is physically performed by NDQAR at the Contractor's location(s).

8.5.8.2 Third Count Investigations

For in country Contractors the investigation may include an onsite visit from the supporting NDQAR to review supply related Contractor records and carry out physical stock checks. This may be carried out by the PA or a delegated DND representative for out of country Contractors.

8.5.8.3 For inventory not recorded in DRMIS

The Contractor must compare the count results with the actual quantities recorded in the Contractor's local system, immediately adjust their records and forward to the NDQAR on a Stock Discrepancy Report. The NDQAR must notify the latter to proceed in identifying the materiel that requires a second count.

The Contractor is responsible to:

- Provide an explanation/justification for each discrepancy;
- List referenced documents, referenced computer transactions, corrective actions taken and where possible, the reasons for surpluses or deficiencies;
- Adjust, when possible, computer balances or inventory control cards when the discrepancy is the result of an error that can be corrected locally; and
- Prepare a Supply Document when a stock balance requires adjustment for approval by the NDQAR.

Once all investigations have been completed for each discrepancy found at the first count, the Contractor must submit to the NDQAR, a Stocktaking Investigation Report within one month. The report must contain the following information:

- Inventory materiel type;
- MMR/Part Number;
- Description;
- Unit price
- Stock balance before stocktaking (First Count);
- Stock quantity counted (First Count);
- Stock quantity adjusted;
- Stock balance after adjustment;
- Stock balance before (Second count);
- Stock counted (Second count);
- Stock quantity adjusted (if required); and
- Corrective actions, reference transaction and justification.

Prices for deficiencies and surpluses must be entered and extended. Netting is not authorized.

The Contractor must prepare a Stocktaking Summary Report for each account type, template in Annex N in the A-LM-184-001/JS-001.

NDQAR on behalf of the Contractor must submit the original copy of the Write-off Report CF 152 and the Stocktaking Summary Report to the R&O Support cell for vetting prior to R&O Support cell forwarding to PA.

8.5.9 GFOS Stocktaking

Contractors and their subcontractors must use the following procedures for GFOS stocktaking:

- Post all transactions to the Inventory Control Card (Non-Catalogued) (ICC) prior to stocktaking as per Annex Q in the A-LM-184-001/JS-001;
- List the part number and description of each line item on the count sheets normally used. The quantity on the ICCs must not be transcribed to the count sheet at this time;
- Ensure issues from stock are not discontinued unless it is essential to do so;
- Quarantine all receipts of spares and suspend posting action for a maximum period of four working days from the time of receipt;
- Conduct a physical count and show the quantity counted in one column of the count sheets. The person counting the stock must add to the list items found in stock for which there is no entry on the count sheets;
- Enter the quantity on the ICC's the appropriate column of the count sheets after the physical count takes place;
- Check for issues, receipts, etc., when quantities do not agree. Re-count the items if quantities still do not agree;
- Compare the quantity shown as "actual count" and the quantity on stock records and the discrepancies indicated on Form CF 152;
- Forward the CF 152 and any adjusting vouchers to the NDQAR under a covering letter;
- Identify surplus and obsolete items for disposal, in accordance with the contract; and

- Ensure that items with a MMR are identified for transfer to the CRPA warehouse.

8.5.10 Verification/Stocktaking of Controlled Equipment
The Contractor must conduct a physical verification/stocktaking of all controlled equipment:

A. Semi-annually:
- Classified Equipment – Stock Classification “E” e.g. Vehicles, Night Vision Devices, GPS, Radios etc. and IM Advisory Code “1P” (item is Classified); and
- Classified Cryptographic Equipment – ST “E” and IM Advisory Code “1Q” (Classified Crypto Materiel).

B. Quarterly:

- Small Arms (SA) – Stock Classification “E” and NSG “10” and “99”; and
- Self-Contained Weapon Systems – ST “A” and NSG “13” & “14”

The Contractor must submit an itemized listing of all controlled equipment to the Procurement Authority within Forty five (45) calendar days of completion of the Stocktaking/Verification. The Contractor must provide an info copy to DQA at the same time.

Upon a discrepancy being found with controlled equipment, the Contractor must notify the supporting NDQAR immediately.

8.5.11 Write off Report - CF 152
NDQAR on behalf of the Contractor must perform all adjustment transactions, then raise and submit the original copy of the CF 152 including the Stocktaking Summary Report to the R&O Support cell for vetting and furtherance to applicable EPMs. The NDQAR must include a covering letter with their submission. Refer to Annex L in the A-LM-184-001/JS-001 for the step by step Process.

8.6 SELECTION NOTICE OBSERVATION MESSAGE (SNOM) (Mandatory)
The SNOM is used by Contractors to report any observation for:

- MRC exceeded on SNAPS;
- Forecast exceeded/suspended on SNAPS;
- Item under repair found Beyond Economical Repair (BER); and
- MMRs received at the repair facility that is not authorized for repair:
    - not selected on SNAPS;
    - without an RMR; or
    - Without a tasking authorization.

In country Contractors submit their observations to the appropriate supply manager; out-of-country Contractors submit their observations to the PA, who must pass it to the appropriate SM for action

Refer to Annex D in the A-LM-184-001/JS-001 for the SNOM template. It is understood that a SNOM can be an email with all the pertinent information enclosed.

8.7 LOSS OR DAMAGE TO DND MATERIEL (Mandatory)
The Contractor must report to the NDQAR all instances of loss or damage to DND owned materiel in his custody within two (2) working days of confirmation of its discovery. If the discrepant item is one of the commodities listed below the supporting NDQAR must be contacted immediately. The supporting NDQAR must then take immediate reporting action. Controlled Goods/CTAT (Controlled Technology Access Transfer) include:

- Weapons, Ammunition, Explosive Ordinance, Self-Contained Weapons Systems, and

Guided Missiles;

- Classified Equipment including Crypto and accountable COMSEC Materiel;
- Deficient Controlled Goods as defined in DAOD 3003-0; and
- Night Vision Devices (NVD)

8.8 SCRAP - CUSTODY & DISPOSAL (Mandatory)
The Contractor must safeguard, control, and dispose of the scrap materiel in accordance with section 6.2 of SAM, A-LM-007-100/AG-001. For all instructions pertaining to disposal NDQAR can ensure the Contractor has a copy of SAM Chapter 6.2.

See EP 18 Disposal Model Annex R in the A-LM-184-001/JS-001 for step by step instruction in conjunction with the above publications.

8.9 DOCUMENTION AND RECORDS
Contractors are required to maintain records of all shipments. A Transportation Control Number (TCN) located on the CARF and WSBL must be issued for each shipment by the appropriate ILCC.

9.0 CONTRACTOR USE OF DND EQUIPMENT AND PUBLICATIONS (As Applicable)
The Contractor must not use DND publications, tools, test-equipment, or jigs and fixtures for commercial work without the written consent of DND. In instances where DND has provided such consent, the contract authority must negotiate suitable compensation for DND. All requests must be directed to the Procurement Authority through the contract authority.

10.0 PUBLICATIONS (As Applicable)
The Contractor must document requirements for publications and submit to the PA. The Contractor must develop procedures to control all DND publications in their possession and be responsible for amending all DND publications in his custody. The record of amendments must be maintained as indicated in the applicable area of each publication.

Unless otherwise specified, publications may be copied or have extracts taken from them. As these copies/extracts are not subject to follow-up amendment action, they are not valid for use as a reference document and must be stamped "FOR INFORMATION ONLY".

The Contractor must respond to any request for "verification of publication holdings" which may be requested periodically by DND. DND must, upon request from the Contractor, supply the necessary forms and certain stationery. However, because of the limited use of certain forms, it is neither practical nor economical to provision for and stock all forms. Therefore, where appropriate, forms are to be reproduced locally by the Contractors.

Publications and forms provided to Contractors must be issued, without charge, by DND.

11.0 AVAILABILITY OF PUBLICATIONS (As Applicable)

Upon the selection of work, the Contractor must provide the PA with a list of all DND publications obtained from the contract authority prior to signing the contract. The Contractor must request assistance from the PA in determining additional requirements in the CFSS Procedures (based upon current holdings and contract requirements), DND specifications, pamphlets, technical orders, drawings, etc. The Contractor must request the required publications from the PA. It is customary, on transfer of work from one Contractor to another, to include the pertinent publications as part of and DND-owned materiel or equipment being transferred. Transfer of responsibility for the control of the publications may also be required at that time.
The factors to be considered in preparing a list of required publications are:

- Estimated use;
- Plant location;
- Possibility of sharing publications;
- Possibility of obtaining information via telephone form a central data or information center;
- Possibility of satisfying requirements by limited distribution only.

The Contractor must request publications in writing from the PA, and once the request is approved, must raise a Supply Document DND 2227. Contractors must acknowledge receipt of publications by signing the accompanying documents.

11.1 DISPOSAL OF PUBLICATIONS

When a publication is no longer needed, the Contractor must request disposal instructions from the PA and take action as directed. In cases where the publication is returned to stock or transferred to another user, the Contractor is to ensure that all the amendments are included or that a deficiency listing (and explanations) accompanies the publication(s).
Forms that have been superseded or cancelled and DND have ordered destroyed, are to be disposed of by the Contractor. No certification is necessary and, since the forms are not on charge, there is no requirement to raise disposal vouchers.

Unused current forms and stationery considered surplus to requirements are to be returned to the issuing agency.
DND office supplies such as DND stamps, seals, labels, markings, etc. If they are surplus to requirements, they are to be returned to the issuing agency.

12.0 OFFICE SERVICES (As Applicable)

The Contractor must perform the secretarial and clerical work necessary to carry out the terms of this contract with respect to the preparation, filing and transmission of all forms, reports and correspondence, relating to the movement, accounting, storage, repair, overhaul, quality control and investigation of materiel covered by this contract. The provision of these office services must be deemed to be work as defined in PSPC clause (1) of 2035 General Conditions – Higher Complexity – Services.

13.0 MINUTES OF MEETINGS (Mandatory)

When minutes of meetings are required, the Contractor must be responsible for taking them and preparing them in a format approved by the Procurement Authority. The Contractor must submit the minutes to the contract authority or the Procurement Authority as directed at the meeting, within ten (10) working days following the meeting.

14.0 PLANT SHUTDOWN/VACATION PERIOD (Mandatory)

During plant shutdown and /or vacation periods, the Contractor must ensure that adequate facilities/personnel are available to ensure the satisfaction of High Priority Requirements (HPRs). If Contractor personnel are not on site during shutdown, a list of names and home phone numbers of those Contractor personnel to be contacted during plant closure must be provided to the NDQAR. It is the Contractor's responsibility to ensure that personnel are available to satisfy PRR requirements once identified.

15.0 REPORTS (Mandatory)

15.1 MATERIAL MANAGEMENT REPORTS

The following reports are available from the supporting NDQAR:

- **Material sent to R&O Contractor**: This report shows all work orders that have been actioned against a MMR against Plant/SLOC;

- **SNAPS**: This report shows all MMRs authorized for repair within a Plant/SLOC with reference to a specific contract;
- **ZEMM_RO_MANAGED: List of Materials-Material R&O / Forecast**: When a repairable MMR is selected in ZEMM_RO_Managed, the repair procedure allows the unserviceable materiel to be shipped without delay to the selected repair facility. The repair procedure applies to all MMRs selected to 3rd line Contractors or DND facilities and 2nd line Regional Maintenance Facilities (RMF). When an item is selected for repair, the forecast arising report allows the facility to plan for the repair by acquiring spare parts, test equipment and skilled labour to be available to meet the work forecasted by DND;
- **ZEIWBK Display Material Availability List:** This report has a view of all Work Orders opened against a MMR;
- **MMBE**: **Stock Overview: Company Code/ Plant/ Storage Location/ Batch:** This is a query that can be used to view all Stock on hand;
- **MM03**: **Display Material (Initial Screen):** This query can be used to view all management data against a MMR; and
- **ZSUP_STRIP**: Supply Strip Report: This query can be used to view all Stock on Hand for an entire MRP area.

15.2 MRP PROGRESS REPORTS

The Contractor must submit one (1) copy of the monthly progress report covering Mobile Repair Party (MRP) activities IAW PSPC Form (7139) to the Procurement Authority, and one (1) copy to the supporting NDQAR.

This monthly progress report can be an email report using an approved format by the Procurement Authority. The report must include the Contractor detailed fault findings, description of work conducted and completed, recommendations, cost breakdown by category including person hours by trade, travel expenses and living expenses.

15.3 TECHNICAL INVESTIGATION AND ENGINEERING STUDIES (TIES) REPORTS

Technical Investigations and Engineering Studies may only be authorized by the Procurement Authority. The Contractor must complete a Technical Investigation Report as stipulated under a DND 626 on an as required basis when so directed.

15.4 ANNUAL DND OWNED INVENTORY REPORT

The Contractor must report annually to the PA on the value of all non-catalogued Accountable Advance Spares (AAS) and Government Furnished Overhaul Spares (GFOS) inventory held on March 31. Annex M provides reporting requirements.

ANNEX C

BASIS OF PAYMENT AND PRICING SCHEDULE

A. BASIS OF PAYMENT

1. Free Flow R & O

For the Work described in Section 1 of the Statement of Work in Annex "A"

In consideration of the Contractor satisfactorily completing all of its obligations under the Contract, the Contractor will be paid firm hourly rates as specified in the Contract in Canadian dollars, FCA Free Carrier at Contractor's facilities, Incoterm 2000. Custom duties are included and Applicable Taxes are extra, if applicable. These rates include the time spent inspecting, evaluating and estimating the cost of repairs as well as management, logistics, administrative activities. The Firm hourly rates are subject to the "Not to Exceed" amount specified as the Maximum Repair Cost (MRC) for the item as detailed in the SOW.

Canada will not pay the Contractor for any design changes, modifications or interpretations of the Work unless they have been approved, in writing, by the Contracting Authority before their incorporation into the Work.

2. Technical Investigation and Engineering Support (TIES), Special Investigations and Technical Studies (SITS), Field Service Representative (FSR), and Mobile Repair Party (MRP) when tasked to do so by a duly signed and completed DND 626 Task Authorization

The Procurement Authority will identify which Basis of payment below will apply to a specific Task Authorization.

a. **Firm Price TA:** In consideration of the Contractor satisfactorily completing all of its obligations under the authorized Task Authorization (TA), the Contractor will be paid the firm lot price, based on the hourly rates specified in the Contract, as specified in the authorized Task Authorization. Customs Duties are subject to exemption and the Goods and Services Tax or Harmonized Sales Tax is extra, if applicable.

   Canada will not pay the Contractor for any design changes, modifications or interpretations of the Work unless they have been approved, in writing, by the Contracting Authority before their incorporation into the Work.

b. **Ceiling Price TA:** The Contractor will be reimbursed for the costs reasonably and properly incurred in the performance of the Work, as determined in accordance with the hourly rates specified in the Contract, to a ceiling price, as specified in the authorized Task Authorization. Customs duties are subject to exemption and Applicable Taxes are extra.

   The ceiling price is subject to downward adjustment so as not to exceed the actual costs reasonably incurred in the performance of the Work and computed in accordance with the Basis of Payment.

c. **Limitation of Expenditure TA:** The Contractor will be reimbursed for the costs reasonably and properly incurred in the performance of the Work specified in the authorized Task Authorization (TA), as determined in accordance with the hourly rates specified in the Contract, to the limitation of expenditure specified in the authorized TA.

Canada's liability to the Contractor under the authorized TA must not exceed the limitation of expenditure specified in the authorized TA. Customs duties are subject to exemption and Applicable Taxes are extra.

No increase in the liability of Canada or in the price of the Work specified in the authorized TA resulting from any design changes, modifications or interpretations of the Work will be authorized or paid to the Contractor unless these design changes, modifications or interpretations have been authorized, in writing, by the Contracting Authority before their incorporation into the Work.

3. Repairs Beyond Economical Repair (BER)

For authorized evaluation or reduction of BER items at the Contractor's plant or subcontractor's plant, the Contractor shall be paid for the actual hours incurred, times the applicable firm hourly rates as specified in the Contract.

4. Storage as and when required

For Storage, as and when required, the rate is to be negotiated with the Contracting Authority on a case by case basis. The Contractor shall supply a detailed estimate.

5. Contractor Supplied Spares (CSS) and Material

For authorized direct materials embodied in-plant, Contractor Supplied Spares (CSS) and material, the Contractor shall be paid the actual Laid Down Cost of the embodied material plus a firm mark-up as specified in the Contract.

6. Contractor Furnished Spares

For authorized request to provide spares for emergency/operational requirements, when tasked to do so by a duly signed and completed DND 626, the Contractor shall be paid the actual Laid Down Cost of the material plus a firm mark-up as specified in the Contract.

7. Subcontracting

In the event any work is subcontracted, the Contractor shall charge Canada actual laid Down Cost of the subcontractor plus the applicable mark-up as specified in the Contract. Invoices shall clearly show the labour rate being charged by the subcontractor. However, at no time shall the Contractor charge rates for subcontracting which are in excess of the rate showing under any resulting Contract's Basis of Payment.

8. Overtime Work Authorization

Emergency repairs/work which is specifically requested to be performed outside regular business working hours shall be charged at the rate of 1.5 times for overtime on normal days and weekends. Emergency repairs required on statutory holidays shall be charged at two times the normal rate. NO premium overtime shall be charged unless authorized in writing by the Procurement Authority.

9. Travel and Living Expenses

The Contractor will be reimbursed its authorized travel and living expenses reasonably and properly incurred in the performance of the Work, at cost, without any allowance for profit and/or administrative overhead, in accordance with the meal, private vehicle provided in Appendices B, C and D of the National Joint Council Travel Directive (http://www.njc-cnm.gc.ca/directive/d10/v238/en), and with the other provisions of the directive referring to "travellers", rather than those referring to "employees".

All payments are subject to government audit.

All travel must have prior authorization of the Procurement Authority

10. Option Periods

If the Option Years are exercised, the labour rate applied will be as per Annex "C" – Basis of Payment and Pricing schedule.

B. PRICING SCHEDULE

See the Basis of Payment in the Request for Proposal.

HOURLY RATES AND MARK-UP

	YEAR 1	YEAR 2	OPTION YEAR 1	OPTION YEAR 2	OPTION YEAR 3
1. Firm all-inclusive hourly rates for in-plant Repair and Overhaul (R&O): The Contractor will be paid a firm all-inclusive hourly rate indicated. This blended R&O rate must include all rates to complete the R&O tasks including management (e.g. project management, quality assurance, logistics, obsolescence management, administrative and workshop supervisor).	_____$/hr	_____$/hr	_____$/hr	_____$/hr	_____$/hr
2. Firm all-inclusive hourly rates for Special Investigation and Technical Studies: The Contractor will be paid a firm all-inclusive hourly rate indicated.	_____$/hr	_____$/hr	_____$/hr	_____$/hr	_____$/hr
3. Firm all-inclusive hourly rates for Technical Investigation and Engineering Support: The Contractor will be paid a firm all-inclusive hourly rate indicated.	_____$/hr	_____$/hr	_____$/hr	_____$/hr	_____$/hr
4. Firm all-inclusive hourly rates for Field Service Representative (FSR)/Mobile Repair Party (MRP): The Contractor will be paid a firm all-inclusive hourly rate indicated.	_____$/hr	_____$/hr	_____$/hr	_____$/hr	_____$/hr
SUB-CONTRACTING	**MARK-UP**	**MARK-UP**	**MARK-UP**	**MARK-UP**	**MARK-UP**
5. Mark-up for Sub-Contractor (not to exceed 50% of Maximum repair Cost: The Contractor will be paid the actual Laid Down Cost plus the firm mark-up indicated.	_____%	_____%	_____%	_____%	_____%
PARTS AND MATERIALS	**MARK-UP**	**MARK-UP**	**MARK-UP**	**MARK-UP**	**MARK-UP**
6. For Contractor Supplied/Furnished Parts and Material: The Contractor will be paid the actual Laid Down Cost plus the firm mark-up indicated.	_____%	_____%	_____%	_____%	_____%

1. Sub-contracting shall not exceed 50% of any Maximum Repair Cost identified in the Statement of Work, Annex "A". All labour rates identified in the Price Schedule above includes work being done by Sub-contractor(s). Sub-contractor rates will not be charged higher than identified above. No "firm

fixed" charges allowed for sub-contracting in any of the categories (i.e. In-plant R&O, SITS, TIES, FSR/MRP).

2. Laid Down Cost is defined as the cost incurred by the Contractor to acquire the parts for resale to Canada or for sub-contractor work. This include the suppliers invoice price (less trade discounts) plus any applicable charges for transportation, foreign exchange, custom duties and brokerage charges, but excludes GST/HST.

3. Mark-up includes the applicable purchasing expense, internal handling and general and administrative overhead expenses plus profit excluding GST/HST. Costs are to be all inclusive, e.g. environmental costs, but shown as separate items on invoices.

ANNEX D

BID EVALUATION PLAN

1 BID EVALUATION PLAN

1.1 Introduction

This document outlines the proposal contents requirements and the methodology for evaluating a bid. This Bid Evaluation Plan identifies all the mandatory requirements and point-rated criteria items to be evaluated, their relative weighting and how they will be scored. **Your proposal must address, in written narrative, all subjects identified in the evaluation section below.**

1.2 Evaluation Stages

1.2.1 The evaluation will be comprised of the following stages:

1.2.1.1 Stage 1: Evaluation of Mandatory Requirements
1.2.1.2 Stage 2: Evaluation of Point Rated Criteria
1.2.1.3 Stage 3: Financial Evaluation

1.3 Bid Evaluation Plan

This plan establishes and identifies the evaluation criteria that will be used in the bid solicitation document. Rating factors are assigned to the evaluation criteria. The rated factors reflect the relative importance of the evaluation criteria and their appropriate weighting to each requirement and ensure fair competition. Narrative responses consisting of a simple statement of compliance without clear narrative details could prevent proper assessment of the proposal and result in your proposal being rejected from further consideration.

1.4 Bid Proposal

The bid proposals will be evaluated on the basis of a combination of mandatory and point rated criteria. To be considered responsive, a bid must meet all the mandatory requirements, must obtain the required minimum score of 75% (or **116** points) on the point-rated criteria, and must meet the first (i.e. minimum) performance level of each rated criteria. Bids not meeting all the mandatory and point rated requirements will be given no further consideration.

1.5 Compliance with Certification

To be considered responsive, Bidders must demonstrate compliance with all checklists and certifications requested in the Request for Proposal.

1.6 Contractor Selection Methodology

The winning Contractor must be selected by the Lowest Cost Compliant Bidder Methodology. Responsive bids must:

a) Comply with all the requirements of the bid solicitation;
b) Meet all mandatory and rated criteria requirements of the technical evaluation criteria; and
c) Provide the lowest submitted price in accordance with paragraph 4, Stage 3: Financial Evaluation.

2 STAGE 1: EVALUATION OF MANDATORY REQUIREMENTS

Canada will review each Proposal for compliance with the Mandatory Requirements. Bids that, in the determination of Canada, do not comply with the Mandatory Requirements will

be eliminated from further consideration in the evaluation process and will not proceed to Stage 2 of the evaluation process.

For purposes of this RFP, comply and compliant mean that the Bid conforms to the Mandatory Requirements without deviation or reservation.

Mandatory requirements are evaluated on a simple pass/fail basis. The treatment of mandatory requirements is stringent. The Bid must address the mandatory requirements specified.

2.1 Compliance with the Terms and Conditions of the RFP

1.	**The Bidder must initial the check-off box indicating the company will comply with all of the Terms and Conditions (RFP Requisition No.: W8486-184162 in any resulting contract)**.	**M**

Description	Compliant Check-off
RFP Requisition No.: W8486-184162	

2.2 Compliance to Statement of Work, Annex "A" and Logistics Statement of Work, Annex "B". Check-off Tables have been provided for each Annex detailed above.

1.	**The Bidder must check-off each box indicating the company will comply with all of the elements of the SOW in any resulting contract.**	**M**

2.2.1 Mandatory Requirements of the SOW, Annex "A".

Table 1: ANNEX A - SOW Check-Off Table

Section	Mandatory Requirements	Check-off
1	**Scope**	
1.1	**Purpose**	
1.2	**Background**	
2	**APPLICABLE DOCUMENTS**	
2.1	Applicability	
2.1.1	Order of Precedence	
2.1.2	Discrepancies	
2.2	Publications	
2.2.1	Government Furnished Publications	
2.2.2	Other Publications	
3	**REPAIR AND OVERHAUL DEFINITIONS**	
3.1	The term "repair" is defined as:	
3.1.1	Third level repair	
3.2	The term "overhaul" is defined as:	
3.2.1	Scope of Overhaul	
4	**REQUIREMENTS**	
4.1	General Requirements	
4.2	Contractor Experience	
4.3	Contractor Resources	
4.3.1	Engineering and Technical Staff	
4.3.2	Test Facilities	

4.3.3	Publication Resources	
4.4	Performance and Reliability	
4.5	Maximum Repair Cost (MRC)	
4.6	Minimum and Maximum Repair Units	
4.7	Repair/Condemn Decisions	
4.8	Provision of Material	
4.8.1	Government Supplied Material	
4.8.2	Contractor Supplied Part	
4.8.3	Obsolescence	
4.8.4	Contractor Furnished Parts	
4.8.5	Contractor Repair Parts Account	
4.9	General Extent of Work	
4.9.1	Mechanical	
4.9.2	Electrical	
4.9.3	Safety	
4.9.4	Finish	
4.9.5	Painting	
4.10	Tactical Mobile Heaters and Related Equipment Overhaul Work	
4.10.1	Equipment Inspection:	
4.10.2	Mechanical Work:	
4.10.3	Electrical Work:	
4.10.4	Frame and Sheet Metal Work:	
4.11	Acceptance Test Procedures	
4.12	Subcontracting of Repair Services	
4.13	Technical Investigation and Engineering Support (TIES)/Special Investigation and Technical Studies (SITS)/ Field Service Representatives (FSRs) and Mobile Repair Parties (MRPs)	
4.13.1	TIES/SITS/FSR/MRP Services	
4.13.2	TIES/SITS/FSR/MRP Engineering Data and Drawings	
4.14	Documentation	
4.15	Unsatisfactory Condition Reports	
4.16	Communication and Technical Assistance	
4.17	Preparation for Delivery	
4.17.1	Preparation and Preservation Instructions	
4.17.2	Packaaging	
4.18	Meetings	
4.18.1	Meetings, Agenda and Minutes	
4.18.2	Kick-off Meetings	
4.18.3	Progress review Meetings	
5	**QUALITY ASSURANCE**	
5.1	Quality Assurance Representative	
5.2	Test and Inspection	
5.3	CSA Certification	
6	**ENVIRONMENTAL, OCCUPATIONAL HEALTH AND SAFETY**	
6.1	Compliance	
6.2	Workplace Hazardous Materials Information System (WHMIS)	
6.3	Controlled Products	
6.4	Use of Controlled Products	
6.5	Mercury Regulations	
6.6	Material Safety Data Sheets/Safety Data Sheets	
6.7	Environmental Management System (EMS) and Occupational Health	

	and Safety	
6.7.1	Environmental Management System	
6.7.2	Occupational Health and Safety Management System	
6.7.3	Applicability	
6.7.4	Audits	
7	**PROJECT MANAGEMENT**	
7.1	Cost and Schedule Control	
7.2	Access to Facilities	
7.2.1	Government Access to Contractor`s Facilities	
7.2.2	Contractor Access to Government Facilities	
7.3	Requests for Technical Information/Assistance	
7.4	Security Classification	
7.5	Compliance with DND Policies	
8	**DELIVERABLES**	
8.1	Acceptance Test Procedures	
8.2	Repaired Material	
8.3	Completion of Work	
8.4	Identification Markings	
8.5	Reports	
8.5.1	In-inspection Report	
8.5.2	Monthly Progress Report	
8.5.3	Annual Inventory Report	
8.5.4	Other Reports	

Document	**Mandatory Requirements**	**Check-off**
Appendix A1 to Annex A	Work Statement for Chemical Agent Resistant Coating System	
Appendix A2 to Annex A	Technicl Publications	

2.2.2 Mandatory Requirements of the Logistics SOW, Annex “B”.

Table 1: ANNEX B – Logistics SOW Check-Off Table

Section	**Mandatory Requirements**	**Check-off**
1.0	GENERAL	
1.1	AIM	
1.2	EXTEND OF WORK	
2.0	ADMINISTRATION	
2.1	RECEIPT	
2.2	DISCREPENCIES IN SHIPMENTS	
2.3	COMPLETION OF WORK	
3.0	WORK CONTROL	
4.0	ANNUAL REPAIR FORECAST – SNAPs	
5.0	COST CONTROL	
6.0	COSTING RECORDS	
7.0	MAINTENANCE SUPPORT	
7.1	MINOR REPAIRS	
7.2	MOBILE REPAIR PARTIES (MRP’s)	
7.3	EQUIPMENT TURN AROUND TIME (TAT)	
7.4	PRIORITY REPAIR REQUEST (PRR)	
7.5	SPECIAL INVESTIGATIONS & ENGINEERING STUDIES (SITs)	

7.6	TECHNICAL INVESTIGATIONS & ENGIINEERING STUDIES (TIES)	
8.0	SUPPLY SUPPORT	
8.1	TRANSACTION DOCUMENTATION	
8.2	CONTRACTOR SUPPLY ACCOUNTING	
8.3	MANAGEMENT OF DND-OWNES SPARES	
8.4	SPARES REVIEW	
8.5	STOCKTAKING	
8.6	SELECTION NOTICE OBSERVATION MESSAGE (SNOM)	
8.7	EMBODIMENT FEES	
8.8	LOSS OR DAMAGE TO DND MATERIAL	
8.9	SCRAP – CUSTODY & DISPOSAL	
8.10	PRESERVATION AND PACKAGING FAILURE	
8.11	REUSABLE CONTAINER	
8.12	TRANSPORTATION	
8.13	CUSTOMS AND EXCISE	
9.0	WARRANTY CONSIDERATION	
10.0	CONTRACTOR USE OF DND EQUIPMENT/PUBLICATIONS	
11.0	PUBLICATIONS	
12.0	OFFICE SERVICES	
13.0	MINUTE OF MEETINGS	
14.0	PLANT SHUTDOWN/VACATION PERIOD	
15.0	REPORTS	
15.1	MRP PROGRESS REPORTS	
15.2	TECHNICAL INVESTIGATIONS & ENGINEERING STIUDIES (TIES) REPORTS	
15.3	ANNUAL CONTRACTOR HELD INVENTORY REPORT	

2.3 Company Profile

Outline the company's history and provide details of experience and expertise as they relate to the work that will be performed under any resulting contract for the Repair and Overhaul of Tactical Mobile Heaters and Related Equipment or Repair and Overhaul (R&O) contracts.

1.	The company and facilities at which the work will be performed must have a minimum of one (1) year of directly related experience including contracts for work on Tactical Mobile Heaters and Related Equipment or Repair and Overhaul (R&O) contracts with military projects. The narrative provided must include details to establish capabilities regarding volume, quality and expertise.	**M**

2.4 Quality Assurance

a) Provide a Quality Assurance Plan that meets the requirement of the contract or provide a copy of the Bidder's ISO 9001/2015 certification.

1.	A copy of a Quality Assurance Plan, with references to Quality Assurance Procedures, which must show how work, including subcontractors, must be monitored for adherence to contract quality assurance requirements as detailed in ISO 9001/20	**M**

b) Provide the job description and major responsibilities of the in-house Quality Assurance/Control representative. Provide an Organizational Chart for the Company that clearly shows the position and reporting structure of the QA representative in your organization.

1.	The job description must reflect direct responsibility with respect to performing quality assurance work.	**M**
2.	The job description must reflect an Organization Chart showing the position of the QA representative in your organization.	**M**

c) Provide adequate in-house office to the National Defence Quality Assurance Representative (NDQAR).

1.	Propose a typical, functional office type facility for the NDQAR to perform his/her duties while at the Bidder`s facility.	**M**

2.5 Hazardous Material

1.	The Bidder must certify that it will handle, transport and dispose of all waste and hazardous waste generated as a result of the Contract in accordance with current Federal and Provincial environmental legislation.	**M**
2.	The Bidder must adequately explain how this is to be monitored and managed	**M**

2.6 Mandatory Plans, Certifications and Checklists
The following is a list of Mandatory Plans, Certifications and Checklists that the Bidder must provide as part of the Technical Evaluation. This list may not be all inclusive.

(i) Initialed Checklists for RFP, Annex “A” and Annex “B”;
(ii) Quality Assurance Plan or copy of ISO 9001/2015 Certification; and
(iii) Hazardous Material Certification.

3 STAGE 2: EVALUATION OF POINT RATED CRITERIA

Bidder’s responses to point rated criteria must be evaluated on the extent to which they meet the requirements. For each bid that has proceeded to stage 2, Canada will review, and score the information provided by the bidder in response to the point rated criteria provided in this section.

3.1 Scoring Methodology for Rated Criteria
Bid Proposals must: achieve a total score of 75% (116 of 155 points); and meet the first (i.e. minimum) performance level of each rated criteria. Proposals that fail to score a total of 116 points must be considered non-compliant. Proposals that fail to meet the first performance level of each rated criteria must be considered non-compliant. The points rated criteria are listed in the table below, along with their individual point values.

Proposals will be evaluated against the criteria listed in Table 3.

1.	Achieving a minimum total score equal to or higher than **116** is required to be considered compliant.	**M**
2.	Achieving the first performance level of each rated criteria is required to be considered compliant.	**M**

Table 3: Scoring Table for Points Rated Criteria

Item	Criteria	Max Points

1	Contractor Qualification requirement	20
2	Organization Responsibilities	10
3	Cost and Control Management	10
4	Logistics Procedures	20
5	Sub-contracting	10
6	Risk Management Plan	10
7	Technical Data Management	10
8	Engineering Personnel	15
9	Configuration Management	10
10	Facility	20
11	Capability	20
	Maximum Points scored	**155**

3.2 Contractor Qualification Requirements (Max 20 points)
The Bidder must provide specific qualifications and experience of the personnel expected to perform work under the contract. Information must include the individual's name and any relevant training and expertise in the area required relating to repair and overhaul of Tactical Mobile Heaters and Related Equipment. The response must also include how many in-house personnel will be licensed technicians by the Canadian Council of Technicians and Technologists (CCTT) that could be allocated to perform this contract. The Bidder must provide the license number or copy of certification of the CCTT licensed technician(s).

Bidders must indicate resources available to produce electronic manuals, technical drawings and other logistic and engineering documentation. Curriculum Vitae (CV) must be included as substantiation for each technician, Professional Engineer, Shop Foreman, Technical Writer and Draftsman. Professional Engineer is defined as an Engineer registered with the licensing and regulating body for engineering in a province of Canada, and holds a permit to practice engineering in that province, and is in good standing with the licensing and regulating body. The Bidder must provide the permit number or copy of certification of the Professional Engineer.

1.	- The engineering staff includes at least one (1) Professional Engineer.	**5**
2.	- The engineering staff includes at least one (1) Professional Engineer. - The technical staff includes at least one (1) licensed technician in the mechanical field registered with the CCTT. - The technical staff includes at least one (1) licensed technician in the electrical field registered with the CCTT.	**10**
3.	-The engineering staff includes at least one (1) Professional Engineer. -The technical staff includes at least one (1) technician in the mechanical field registered with the CCTT. -The technical staff includes at least one (1) licensed technician in the electrical field registered with the CCTT. -The staff also includes a Shop foreman, with a minimum of five (5) years of experience and at least one (1) year of supervisory experience relating to R&O of Field Heaters.	**15**
4.	-The engineering staff includes at least one (1) Professional Engineer. The technical staff includes at least one (1) technician in the mechanical field registered with the CCTT. -The technical staff includes at least one (1) licensed technician in the electrical field registered with the CCTT. -The staff also includes a Shop foreman, with a minimum of five (5) years of experience and at least one (1) year of supervisory experience relating to R&O of Field Heaters and technical writers able to produce electronic manuals, technical drawings and other engineering documentation.	**20**

3.3 Organization Responsibilities (Max 10 points)
The Bidder must provide a list of organizational roles and responsibilities and name a Project Manager as the single point of contact for the project. **A CV for the Bidder's Project Manager must be provided.** This is for experience assessment purposes only**.**

1.	- The Bidder provides the company organizational chart and identifies a Project Manager.	**2**
2.	- The Bidder provides the company organizational chart and identifies a Project Manager with a minimum of two (2) years of experience in R & O contracts.	**5**
3.	- The Bidder provides the company organizational chart and identifies a Project Manager with a minimum of five (5) years of experience in R & O contracts.	**7.5**
4.	The Bidder provides the company organizational chart and identifies a Project Manager with a minimum of five (5) years of experience in R&O contracts of which three (3) years have been in military R&O projects.	**10**

3.4 Compliance with Special Instructions for Repair and Overhaul Contractors, A-LM-184-001/JS-001 (Max 30 points)

3.4.1 (Cost and Control (Max 10 points)
Bidders must indicate how R&O costs and schedules will be controlled and how modifications and additional tasks will be met and managed.

1.	The Bidder provides details of: -the interrelationship between the company cost accounting system and the cost control system.	**2.5**
2.	The Bidder provides details of: -the interrelationship between the company cost accounting system and the cost control system; and -how cost and schedule control of the contracted tasks will be met and managed.	**5**
3.	The Bidder provides details of: -the interrelationship between the company cost accounting system; -the cost control system and how cost and schedule control of the contracted tasks will be met and managed; and -the interrelationship between the tasks and various role of personnel involved in the cost control process.	**7.5**
4.	The Bidder provides details of: -the interrelationship between the company cost accounting system and the cost control system; -how cost and schedule control of the contracted tasks will be met and managed; -the interrelationship between the tasks and various role of personnel involved in the cost control process; and -their capability to collect and segregate actual costs on a real-time basis.	**10**

3.4.2 Logistical Procedures (Max 20 Points)

The Bidder must state specifically in a narrative and provide evidence that their company has the ability to meet, or is performing, or has performed all procedures applicable to the contract in accordance with A-LM-184-001/SJ-001. The Bidder must provide the contract title for the cited past experience and current experience.

1.	The Bidder has basic awareness of the logistic issues.	**5**
2.	The Bidder has stated the logistics issues and provided evidence of abilities.	**10**

3.	The Bidder has stated the logistics issues and cited past experience in implementing DND logistic procedures in accordance with A-LM-184-001/SJ-001.	**15**
4.	The Bidder has stated the logistics issues, has cited past experience in implementing DND logistic procedures and currently has a well-established in-house logistical team implementing the DND procedures in accordance with A-LM-184-001/SJ-001.	**20**

3.5 Sub-contracting (Max 10 Points)
The Bidder must identify potential subcontractors and identify which work must be performed by these subcontractors. The Bidder must provide details on how quotes will be solicited, how subcontractors will be selected and how the quality and delivery schedules of subcontracted work will be monitored to ensure compliance with the terms and conditions of the SOWs. The Bidder must outline any previous experience with the proposed subcontractors.

1.	The Bidder identifies its potential subcontractors, but does not demonstrate the company has knowledge of subcontracting processes.	**1**
2.	The Bidder identifies its potential subcontractors and their roles in fulfilling the requirements of the SOWs, and states the issues involved in the subcontracting process.	**5**
3.	The Bidder identifies its potential subcontractors and their roles in fulfilling the requirements of the SOWs, and states the issues involved in the subcontracting process, based on cited past experience in resolving or mitigating the issues involved in the subcontracting process.	**7.5**
4.	The Bidder has no subcontractors, or the Bidder identifies its potential subcontractors and their roles in fulfilling the requirements of the SOWs, and states the issues involved in the subcontracting process, based on cited past experience in resolving or mitigating the issues involved in the subcontracting process and there is little or no reliance on subcontractors in the production plan.	**10**

3.6 Risk Management Plan (Max 10 Points)
The Bidder must provide a risk management plan that addresses the risks inherent in the program, and includes a risk assessment, risk prioritization and risk mitigation strategies. The plan must include how the risks will be managed through the contract and the frequency of updates.

1.	The Bidder has basic knowledge of the risk issues.	**2.5**
2.	The Bidder understands risks involved in an R&O contract, and: -has identified and prioritized the risks.	**5**
3.	The Bidder understands the risks in an R&O contract, and: -has identified and prioritized the risks; and -has included a risk mitigation plan.	**7.5**
4.	The Bidder understands the risks in an R&O contract, and: -has identified and prioritized the risks; -has included a risk mitigation plan; and -has provided an example risk mitigation plan currently implemented on another R&O project.	**10**

3.6 Technical Data Management (Max 10 points)
The Bidder must demonstrate his capability to manage and update technical data for the contract.

1.	The Bidder does not have any in-house technical data capability, or Computer Aided Design (CAD) systems and uses Subcontractors for this requirement.	**1**
2.	The Bidder has in-house technical data capability and a CAD system.	**5**
3.	The Bidder has in-house technical data and a CAD system and has at least two (2) years of experience in production of technical data for various contracts.	**7.5**

4.	The Bidder has in-house technical data capability and a CAD system, and has more than two (2) years of experience in providing technical data for military projects.	**10**

3.7 Engineering Personnel (Max 15 Points)
The Bidder must demonstrate that they have access to qualified Engineering personnel to support the contract. Qualified Engineering personnel is defined as a Professional Engineer registered with the licensing and regulating body for engineering in a province of Canada, and holds a permit to practice engineering in that province, and is in good standing with the licensing and regulating body. The Bidder must provide the permit number or copy of certification of the Professional Engineer.

1.	The Bidder indicates one (1) Professional Engineer.	**2.5**
2.	The Bidder indicates at least one (1) Professional Mechanical Engineer and one (1) Professional Electrical Engineer.	**5**
3.	The Bidder indicates engineering and design staff of more than two (2) and up to five (5) personnel including at least one (1) Professional Mechanical Engineer and one (1) Professional Electrical Engineer.	**10**
4.	The Bidder indicates engineering and design staff of more than five (5) personnel including at least one (1) Professional Mechanical Engineer and one (1) Professional Electrical Engineer.	**15**

3.8 Configuration Management (Max 10 Points)
Bidders must provide a Configuration Management (CM) Plan demonstrating how they intend to manage the configuration of Field Heaters and Related Equipment.

1.	The Bidder has a basic awareness of configuration management requirements.	**2.5**
2.	The Bidder has a CM plan but the plan provided does not completely address the four fundamental parts of configuration management, which are organization, responsibilities, reports and control.	**5**
3.	The Bidder has a CM plan that addresses the four aspects of configuration management and how it will be handled for the R&O contract, including organization, responsibilities, reports and control.	**7.5**
4.	The Bidder has a CM plan that addresses the four aspects of configuration management and how it will be handled for the R&O contract, including organization, responsibilities, reports and control. In addition, the Bidder has at least one year of experience in CM on military Diesel Fuel Fired Field Heaters and Related Equipment or military R&O projects.	**10**

3.9 Facility (Max 20 Points)
This evaluation applies to the overall facility and equipment capacity notwithstanding of location or status (in-house or sub-contracted).

Bidders must identify their owned/leased facilities and location where the work will be performed. Provide description, size and layout of work areas, storage facilities and a list of machinery, repair, tooling and test equipment that will be available for work to be performed at the time of bid closing.

Bidders must provide details confirming the facilities meet regulations governed by all levels of government and environmental requirements imposed by award of a repair & overhaul contract.

	The Bidder provides a facility area of minimum 800 sq. ft to 999 sq. ft and a minimum list of machinery and equipment capable of performing the following tasks: - precision metal machining; - welding capability for repairing and fabricating with stainless steel, aluminum and steel;	

1.	- precision metal drilling; - Storage capability for incoming and outgoing heaters (minimum 10 units) and Spare parts; - special tools and test equipment to perform the specified acceptance test procedure; and - Environmental control (ventilation, exhaust and heating) to comply with Environmental Health and Safety Act.	**1**
2.	The Bidder provides a facility area of minimum 1000 sq. ft to 4999 sq. ft and has a minimum list of machinery and equipment capable of performing the following tasks: - precision metal machining and surface milling; welding capacity for repairing and fabricating with stainless steel, aluminum and steel; - precision metal drilling; - Storage capability for incoming and outgoing heaters (minimum 15 units) and Spare parts; - special tools and test equipment to perform the specified acceptance test procedure; and - Environmental control (ventilation, exhaust and heating) to comply with Environmental Health and Safety Act.	**10**
3.	The Bidder provides a facility area of 5000 sq. ft or greater and has a minimum list of machinery and equipment capable of performing the following tasks: - precision metal machining, surface milling and Computer Numerically Controlled (CNC) milling; - welding capacity for repairing and fabricating with stainless steel, aluminum and steel; - precision metal drilling; - Storage capability for incoming and outgoing heaters (minimum 25 units) and spare parts; - special tools and test equipment to perform the specified acceptance test procedure; and - Environmental control (ventilation, exhaust and heating) to comply with Environmental Health and Safety Act.	**15**
4.	The Bidder provides a facility area of 5000 sq. ft or greater and has a minimum list of machinery and equipment capable of performing the following tasks: - precision metal machining, surface milling and Computer Numerically Controlled (CNC) milling; - welding capacity for repairing and fabricating with stainless steel, aluminum and steel; - precision metal drilling; - Storage capability for incoming and outgoing heaters (minimum 50 units) and spare parts; - Diagnostic equipment for testing diesel engines; - performing in-house CARC painting; - special tools and test equipment to perform the specified acceptance test procedures; and - Environmental control (ventilation, exhaust and heating) to comply with Environmental Health and Safety Act.	**20**

3.10 Production Capability (Max 20 Points)

The Bidder must provide a written production plan which outlines the startup, production, ordering of parts and corresponding time required for each task from time of contract award. The production plan must demonstrate the routine 60 calendar day turnaround time (TAT) from the date the equipment is received to the date the equipment is reported serviceable, after successful completion of the Acceptance Test Procedures.

The Bidder must provide a narrative to indicate how they intend to monitor the R&O process to ensure the routine TAT is met throughout the contract. The Production Plan must show the process of how each operation is to be conducted (Bidders may choose to submit a flow chart in the explanation).

1.	The Bidder provides only a production management plan.	**3**
2.	The Bidder provides a production management plan, and: - explanation of the process and how each operation is executed and the respective organizational responsibilities.	**6**
3.	The Bidder provides a production management plan, and: - explanation of the process and how each operation is executed and the respective organizational responsibilities; and - has at least 24 months of experience in the last five (5) years in executing a production plan with processes for each operation on Military equipment.	**10**
4.	The Bidder provides a production management plan, and: - explanation of the process and how each operation is executed and the respective organizational responsibilities; - the production plan details procedures for handling urgent requirements including priority repair requests (PRR); and - the Bidder has at least 24 months of experience in the last five (5) years in executing a production plan with processes for each operation on Military equipment.	**15**
5.	The Bidder provides a production management plan, and: - explanation of the process and how each operation is executed and the respective organizational responsibilities; - the production plan details procedures for handling urgent requirements including priority repair requests (PRR); - the production plan details of procedures in place for handling workload surges while continuing to meet TAT; and - the Bidder has at least 24 months of experience in the last five (5) years in executing a production plan with processes for each operation on Military equipment.	**20**

4 STAGE 3: FINANCIAL EVALUATION

4.1 Mandatory Financial Evaluation Criteria

The Financial Bid must be in accordance with the Price Schedule at Annex C and the Basis of Payment in the Request for Proposal.

The evaluated price of the Bid must be determined as follows:

Part A – Labour Cost

1. Determine the Average All-Inclusive Hourly Rate from the Firm All-Inclusive Hourly Rate over the five (5) year period for each of the four (4) following categories:
    a. In-plant Repair and Overhaul (R&O);
    b. Special Investigation and Technical Studies (SITS);
    c. Technical Investigation and Engineering Support (TIES); and
    d. Field Service Representative (FSR) / Mobile Repair Party (MRP).

2. Determine the weighted cost per category: (Average All-Inclusive Hourly Rate) x (weight).
   a. In-plant R&O: In-plant R&O Average All-Inclusive Hourly Rate x 78;
   b. SITS: SITS Average All-Inclusive Hourly Rate x 5;
   c. TIES: TIES Average All-Inclusive Hourly Rate x 15; and
   d. FSR /MRP: FSR/MRP Average All-Inclusive Hourly Rate x 2.

The sum of all weighed cost per category will determine the Total Cost of Part A.

Part B – Sub-Contracting, Parts & Material Cost

For evaluation purposes:

- The Sub-contracting estimated amount equals 50% of the Total Cost of all four (4) categories (In-plant R&O, SITS, TIES and FSR/MRP) determined in the above, Part A. The Sub-contracting estimated amount will be equal to (Total Cost for all four (4) categories x 50 percent); and

- The Parts and Material estimated amount equals 30% of the Total Cost of all four (4) categories (In-plant R&O, SITS, TIES and FSR/MRP) determined in the above, Part A. The Parts and Material estimated amount will be equal to (Total Cost for all four (4) categories x 30 percent).

1. The total cost of sub-contracting is determined as follows:
   (Average mark-up rate over the 5-year period) x (Sub-contracting estimated amount)

2. The total cost of parts and material:
   (Average mark-up rate over the 5-year period) x (Parts and material estimated amount)

3. The sum of the total cost of sub-contracting and total cost of parts and material will determine the cost of Part B.

The sum of Part A and Part B will determine the evaluated price of the bid.

See Example of Evaluation Grid (Appendix D1 to Annex D).

Appendix D1 – Example of Evaluation Grid

PART A								
	Firm All-Inclusive Hourly Rate					Average	Weight	Weighted Cost
In-Plant R&O	$ 65.25	$ 67.43	$ 69.50	$ 72.37	$ 75.15	$ 69.94	78	$ 5,455.32
SITS	$ 79.90	$ 82.10	$ 84.63	$ 87.51	$ 89.76	$ 84.78	5	$ 423.90
TIES	$ 79.90	$ 82.10	$ 84.63	$ 87.51	$ 89.76	$ 84.78	15	$ 1,271.70
FSR/MRP	$ 93.21	$ 95.69	$ 98.37	$ 100.45	$ 102.95	$ 98.13	2	$ 196.26
							Total Cost for Part A	$ 7,347.18
PART B								
Sub-contracting								
Total Cost of all four (4) Categories in Part A x 50%	**Firm Mark-Up**					**Average**	**Total Cost of Sub-Contracting**	
$ 3,673.59	21.00%	21.50%	22.70%	23.40%	25.80%	22.88%	$ 840.52	
Parts and Material								
Total Cost of all four (4) Categories in Part A x 30%	**Firm Mark-Up**					**Average**	**Total Cost of Sub-Contracting**	
$ 2,204.15	19.20%	20.40%	21.70%	22.50%	23.60%	21.48%	$ 473.45	
							Total Cost for Part B	$ 1,313.97
							Evaluated price of the Bid	

The firm all-inclusive hourly rates and firm mark-ups are provided for the purpose of this example only.

Part A

In-Plant R&O:	$65.25 + $67.43 + $69.50 + $72.37 + $75.15 = $349.70 / 5 = $69.94 $69.94 x 78 = $5,455.32
SITS:	$79.90 + $82.10 + $84.63 + $87.51 + $89.76 = $423.90 $423.90 / 5 = $84.78 $84.78 x 5 = $423.90
TIES:	$79.90 + $82.10 + $84.63 + $87.51 + $89.76 = $423.90 $423.90 / 5 = $84.78 $84.78 x 15 = $1,271.70
FSR/MRP:	$93.21 + $95.69 + $98.34 + $100.45 + $102.95 = $490.64 $490.64 / 5 = $98.13 $98.13 x 2 = $196.26
Total Cost for Part A:	$5,455.32 + $423.90 + $1,271.70 + 196.26 = $7,374.18

Part B

Sub-contracting:	$7,347.18 x 50% = $3,673.59 21.00% + 21.50% + 22.70% + 23.40% + 25.80% = 114.40% 114.40% / 5 = 22.88% $3,673.59 x 22.88% = $840.52
Parts and Material	$7,347.18 x 30% = $2,204.15 19.20% + 20.40% + 21.70% + 22.50% + 23.60% = 107.40% 107.40% / 5 = 21.48% $2,204.15 x 21.48% = $473.45
Total Cost for Part B	$840.52 + $473.45 = $8,661.15
Evaluated Price of the Bid:	$7,347.18 + $1,313.97 = $8,661.15

ANNEX "E"

ELECTRONIC PAYMENT INSTRUMENTS

As indicated in Part 3, clause 3.1.1, the Bidder must identify which electronic payment instruments they are willing to accept for payment of invoices.

The Bidder accepts any of the following Electronic Payment Instrument(s):

( ) VISA Acquisition Card;

( ) MasterCard Acquisition Card;

( ) Direct Deposit (Domestic and International);

( ) Electronic Data Interchange (EDI);

( ) Wire Transfer (International Only);

( ) Large Value Transfer System (LVTS) (Over $25M)

ANNEX "F" to PART 5 - BID SOLICITATION

FEDERAL CONTRACTORS PROGRAM FOR EMPLOYMENT EQUITY - CERTIFICATION

I, the Bidder, by submitting the present information to the Contracting Authority, certify that the information provided is true as of the date indicated below. The certifications provided to Canada are subject to verification at all times. I understand that Canada will declare a bid non-responsive, or will declare a contractor in default, if a certification is found to be untrue, whether during the bid evaluation period or during the contract period. Canada will have the right to ask for additional information to verify the Bidder's certifications. Failure to comply with any request or requirement imposed by Canada may render the bid non-responsive or constitute a default under the Contract.

For further information on the Federal Contractors Program for Employment Equity visit Employment and Social Development Canada (ESDC)-Labour's website (https://www.canada.ca/en/employment-social-development/programs/employment-equity/federal-contractor-program.html).

Date: _____(YYYY/MM/DD) (If left blank, the date will be deemed to be the bid solicitation closing date.)

Complete both A and B.

A. Check only one of the following:

( ) A1. The Bidder certifies having no work force in Canada.

( ) A2. The Bidder certifies being a public sector employer.

( ) A3. The Bidder certifies being a federally regulated employer being subject to the Employment Equity Act.

( ) A4. The Bidder certifies having a combined work force in Canada of less than 100 permanent full-time and/or permanent part-time employees.

( ) A5. The Bidder has a combined workforce in Canada of 100 or more employees; and

( ) A5.1. The Bidder certifies already having a valid and current Agreement to Implement Employment Equity (AIEE) in place with ESDC-Labour.

OR

( ) A5.2. The Bidder certifies having submitted the Agreement to Implement Employment Equity (LAB1168) to ESDC-Labour. As this is a condition to contract award, proceed to completing the form Agreement to Implement Employment Equity (LAB1168), duly signing it, and transmit it to ESDC-Labour.

B. Check only one of the following:

( ) B1. The Bidder is not a Joint Venture.

OR

( ) B2. The Bidder is a Joint Venture and each member of the Joint Venture must provide the Contracting Authority with a completed annex Federal Contractors Program for Employment Equity - Certification. (Refer to the Joint Venture section of the Standard Instructions)