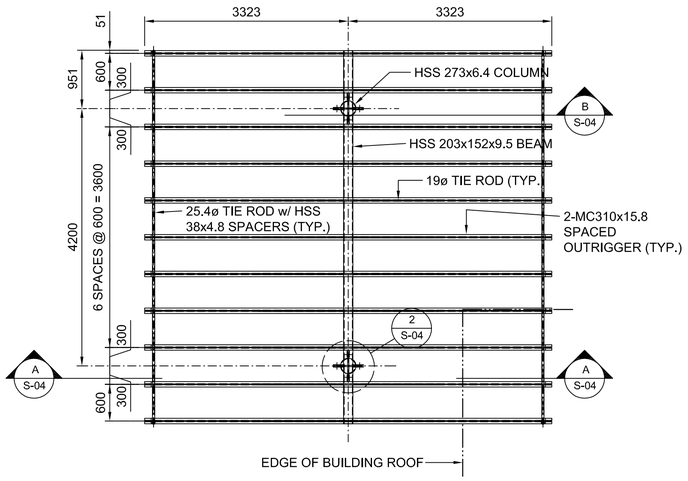

CANOPY FRAMING PLAN - VISITOR CENTRE

SCALE: 1:50

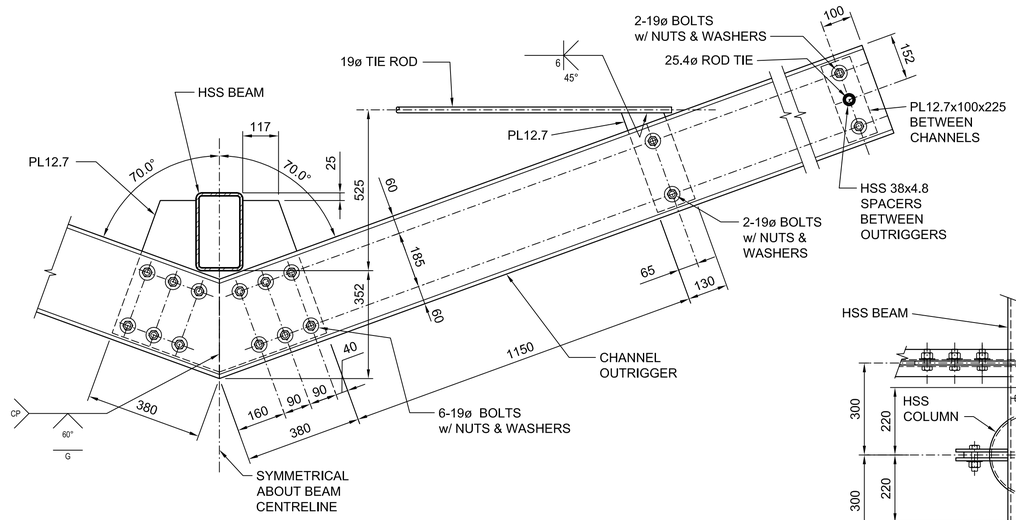

B
S-04
SECTION

SCALE: 1:10

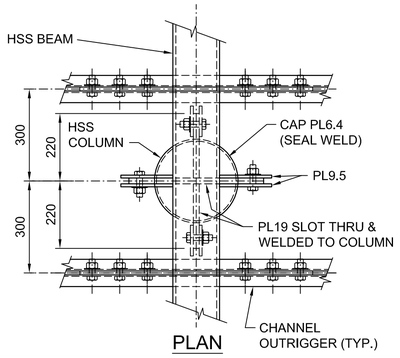

PLAN

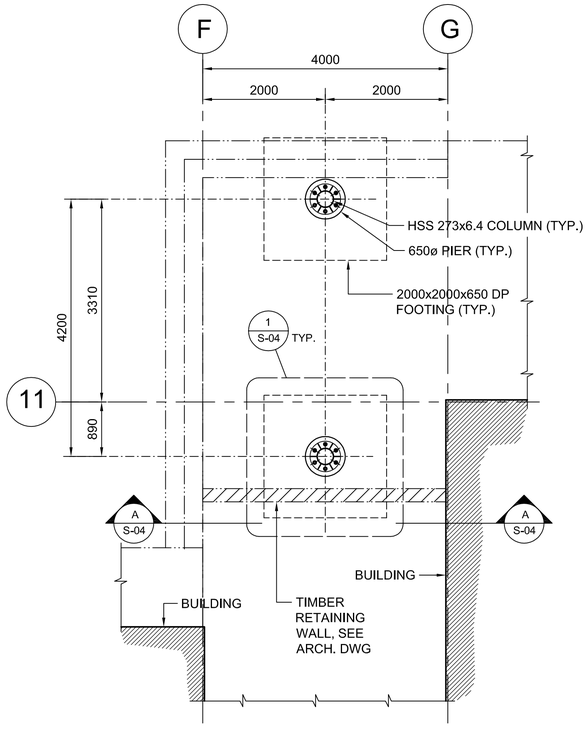

CANOPY FOUNDATION PLAN - VISITOR CENTRE

SCALE: 1:50

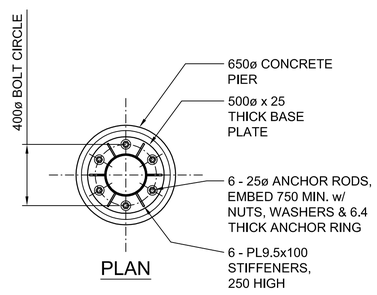

PLAN

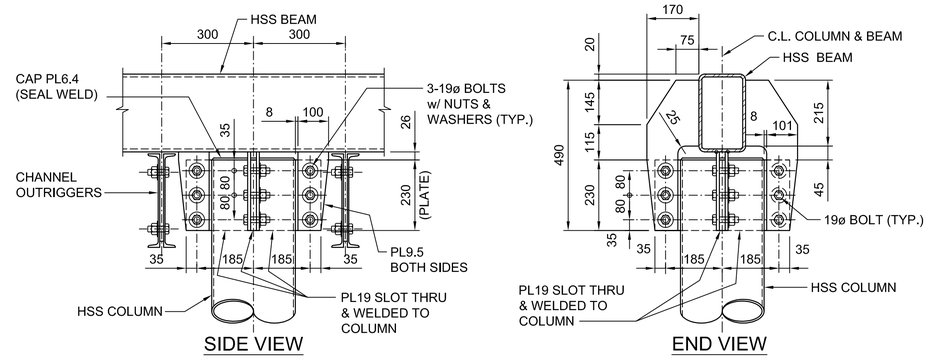

SIDE VIEW

END VIEW

2
S-04
DETAILS - COLUMN CONNECTION AT BEAM

SCALE: 1:10

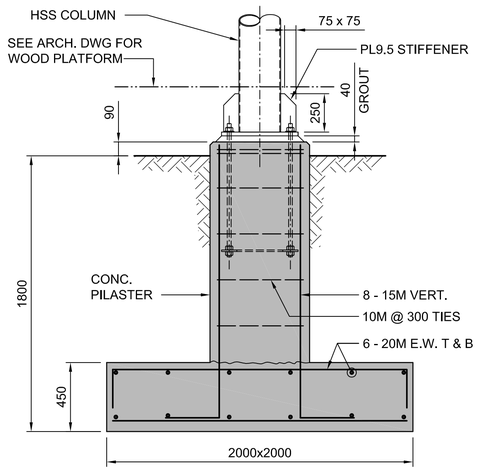

SECTION

1
S-04
DETAIL - FOUNDATION

SCALE: 1:20

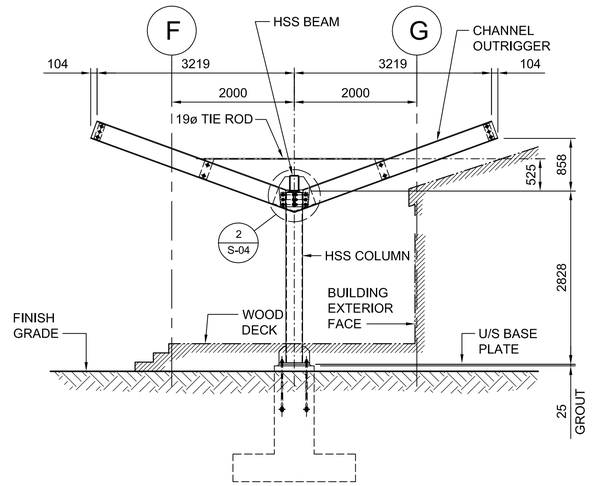

A
S-04
SECTION

SCALE: 1:50

Government of Canada / Gouvernement du Canada

Parks Canada / Parcs Canada

Newfoundland East Field Unit / Unité de gestion de Terre-neuve Est

NOTES:

1. ALL EXPOSED STEEL A 3-PART PAINT SYSTEM CONFORMING TO ISO 12944 CORROSIVE CATEGORY C5-1.

LICENSED PROFESSIONAL ENGINEER
09537
ANDREW BRYON FEENER
SIGNATURE
2018/10/17
DATE
NEWFOUNDLAND & LABRADOR

FOR TENDER PURPOSES ONLY

No.	Date	Description	Drawn by Dessiné par	Approved Approuvé
C01	2018/10/17	ISSUED FOR TENDER	D.K.	NS

A Detail number / Numéro de detail
B Sheet number / Numéro de la feuille

Linear dimensions in millimetres / Dimensions lineaires en millimetres

Consultant's Name / Nom de l'expert-conseil
SNC·LAVALIN
SNC·LAVALIN Inc.
Halifax, Nova Scotia, Canada
Member of the SNC·LAVALIN Group

Eng. Stamp / Sceau de l'ingénieur

Project title/Titre du projet
TERRA NOVA VISITOR CENTRE
REHABILITATION UPGRADES

GLOVERTOWN, NL

Drawing title/Titre du dessin
CANOPY FRAMING
PLANS, SECTIONS &
DETAILS

Designed by/Concept par: A.F.
Date:
Drawn by/Desinné par: D.K.
Date: 2018/04/02
Checked by/Vérifié par: C.S.
Date:
Project No./No. du projet: 1326
Scale/Echelle: AS SHOWN
Sheet No./Node la feuille:
Drawing Set No./No. de série du dessin: S-04

649335-0001-D-43-DWG-000-0004-01

GSC-A1