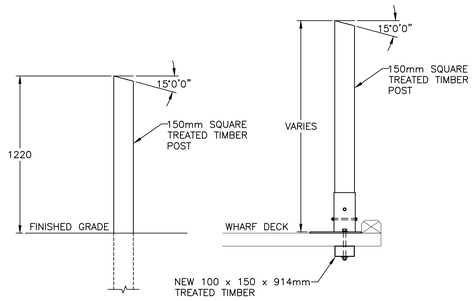

SECTION – TREATED TIMBER POST (2/E5)

SCALE : 1:20

0mm 500mm 1000mm 1500mm 2000mm 2500mm

NOTE:

1. ALL DIMENSIONS ARE IN MILLIMETERS.

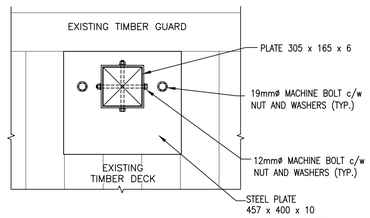

PLAN VIEW – MOUNTING PLATE (3/E5)

SCALE : 1:10

0mm 100 200 300 400 500 600 700 800 900 1000mm

NOTE:
ALL DIMENSIONS ARE IN MILLIMETERS AND REPRESENT MINIMUM VALUES.

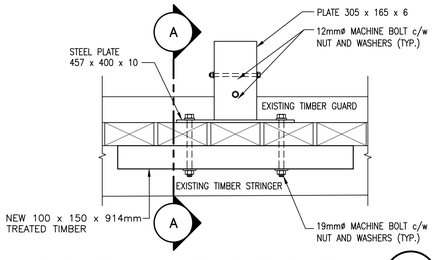

ELEVATION – MOUNTING PLATE (4/E5)

SCALE : 1:10

0mm 100 200 300 400 500 600 700 800 900 1000mm

NOTE:
ALL DIMENSIONS ARE IN MILLIMETERS AND REPRESENT MINIMUM VALUES.

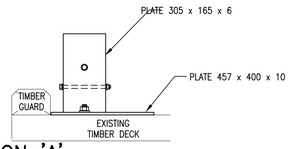

SECTION 'A'

SCALE : 1:10

0mm 100 200 300 400 500 600 700 800 900 1000mm

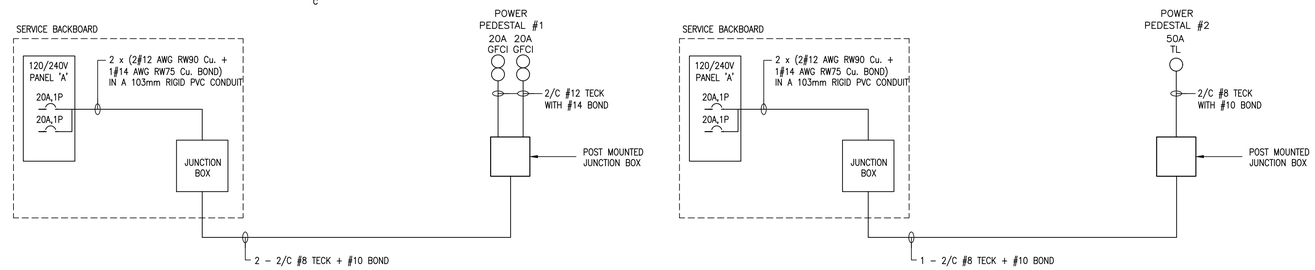

POWER PEDESTAL #1

NOTE:
SPLICES IN ALL JUNCTION BOXES MOUNTED ON FLOATING DOCK POWER PEDESTALS ARE TO BE MADE USING MECHANICAL BOLTED CONNECTORS AND HEAT SHRINK BOOTS.

POWER PEDESTAL #2

NOTE:
SPLICES IN ALL JUNCTION BOXES MOUNTED ON FLOATING DOCK POWER PEDESTALS ARE TO BE MADE USING MECHANICAL BOLTED CONNECTORS AND HEAT SHRINK BOOTS.

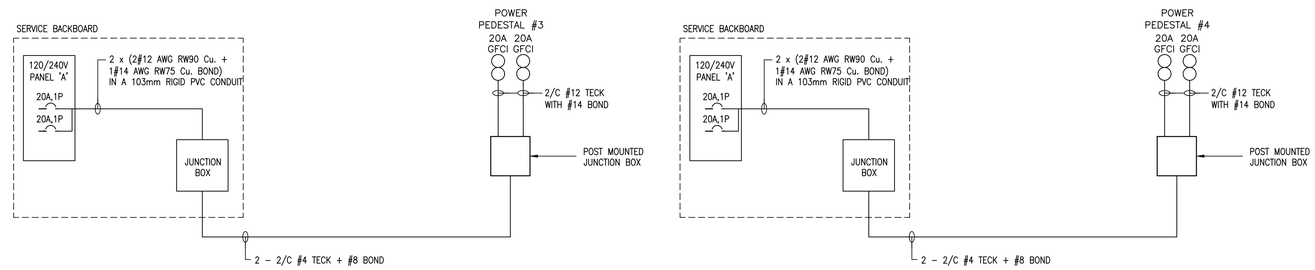

POWER PEDESTAL #3

NOTE:
SPLICES IN ALL JUNCTION BOXES MOUNTED ON FLOATING DOCK POWER PEDESTALS ARE TO BE MADE USING MECHANICAL BOLTED CONNECTORS AND HEAT SHRINK BOOTS.

POWER PEDESTAL #4

NOTE:
SPLICES IN ALL JUNCTION BOXES MOUNTED ON FLOATING DOCK POWER PEDESTALS ARE TO BE MADE USING MECHANICAL BOLTED CONNECTORS AND HEAT SHRINK BOOTS.

FEEDER WIRING DIAGRAM FOR POWER PEDESTALS (1/E5)

SCALE : N.T.S.

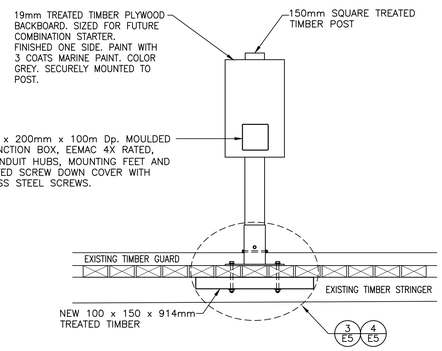

ELEVATION – DERRICK (FUTURE) CONTROL BACKBOARD (9/E1 E5)

SCALE : 1:20

0mm 500mm 1000mm 1500mm 2000mm 2500mm

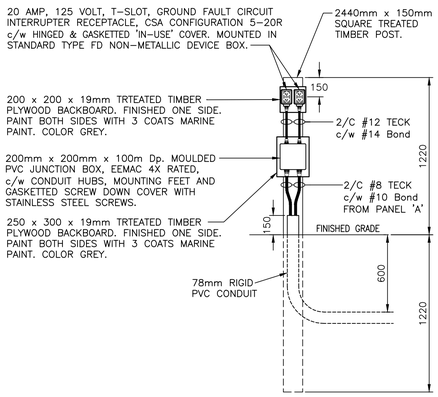

POWER PEDESTAL #1 (5/E1 E5)

SCALE : 1:20

0mm 500mm 1000mm 1500mm 2000mm 2500mm

NOTE:

1. ALL DIMENSIONS ARE IN MILLIMETERS.
2. SEAL AROUND TECK CABLES AT CONDUIT OPENING TO PREVENT WATER FROM ENTERING.

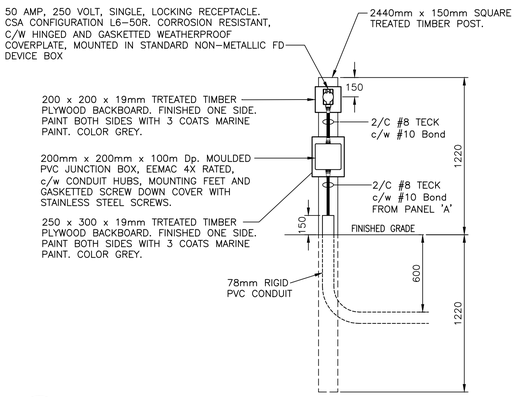

POWER PEDESTAL #2 (6/E1 E5)

SCALE : 1:20

0mm 500mm 1000mm 1500mm 2000mm 2500mm

NOTE:

1. ALL DIMENSIONS ARE IN MILLIMETERS.
2. SEAL AROUND TECK CABLES AT CONDUIT OPENING TO PREVENT WATER FROM ENTERING.

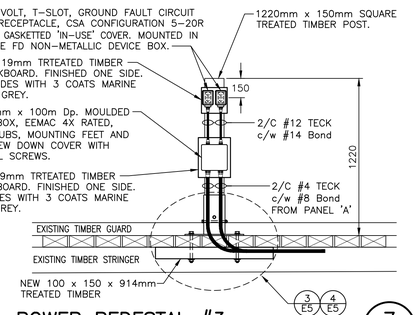

POWER PEDESTAL #3 (7/E1 E5)

SCALE : 1:20

0mm 500mm 1000mm 1500mm 2000mm 2500mm

NOTE: ALL DIMENSIONS ARE IN MILLIMETERS

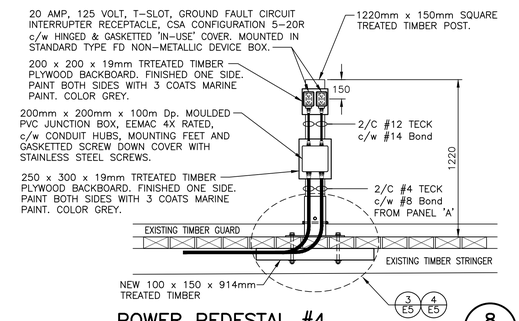

POWER PEDESTAL #4 (8/E1 E5)

SCALE : 1:20

0mm 500mm 1000mm 1500mm 2000mm 2500mm

NOTE: ALL DIMENSIONS ARE IN MILLIMETERS

Public Works and Government Services Canada / Travaux Publics et Services gouvernementaux Canada

revisions		date
0	ISSUED FOR TENDER	NOV. 2018

project / projet

BERLIN WALL APPROACH STRUCTURE
PEREAU (DELHAVEN)
KINGS COUNTY
NOVA SCOTIA

drawing / dessin

POWER PEDESTAL DETAILS AND WIRING DIAGRAMS

designed / conçu: K.WOLFE
date: NOVEMBER 2018
drawn / dessiné: K.WOLFE
date: NOVEMBER 2018
approved / approuvé: Digitally signed by Melendez-Mejia, Victor-Manuel Date: 2018.11.28 11:35:04 -04'00'
date
Tender / Soumission
PWGSC Project Manager / Administrateur de projets TPSGC
project number / no. du projet: R.100038.001
drawing no. / no. du dessin: E5