Public Works and Government Services Canada | Travaux publics et Services gouvernementaux Canada

RETURN BIDS TO:
RETOURNER LES SOUMISSIONS À:

Bid Receiving - PWGSC / Réception des soumissions - TPSGC
11 Laurier St. / 11, rue Laurier
Place du Portage, Phase III
Core 0B2 / Noyau 0B2
Gatineau, Québec K1A 0S5
Bid Fax: (819) 997-9776

REQUEST FOR PROPOSAL
DEMANDE DE PROPOSITION

Proposal To: Public Works and Government Services Canada

We hereby offer to sell to Her Majesty the Queen in right of Canada, in accordance with the terms and conditions set out herein, referred to herein or attached hereto, the goods, services, and construction listed herein and on any attached sheets at the price(s) set out therefor.

Proposition aux: Travaux Publics et Services Gouvernementaux Canada

Nous offrons par la présente de vendre à Sa Majesté la Reine du chef du Canada, aux conditions énoncées ou incluses par référence dans la présente et aux annexes ci-jointes, les biens, services et construction énumérés ici sur toute feuille ci-annexée, au(x) prix indiqué(s).

Comments - Commentaires

Title - Sujet
FRD Gate Motor #1 rebuild

Solicitation No. - N° de l'invitation
EP168-192418/A

Date
2019-01-16

Client Reference No. - N° de référence du client
20192418

GETS Reference No. - N° de référence de SEAG
PW-$$HN-331-76216

File No. - N° de dossier
hn331.EP168-192418

CCC No./N° CCC - FMS No./N° VME

Solicitation Closes - L'invitation prend fin
at - à 02:00 PM
on - le 2019-02-26

Time Zone
Fuseau horaire
Eastern Standard Time
EST

F.O.B. - F.A.B.
Plant-Usine: ☐ **Destination:** ☑ **Other-Autre:** ☐

Address Enquiries to: - Adresser toutes questions à:
Turner, Louie

Buyer Id - Id de l'acheteur
hn331

Telephone No. - N° de téléphone
(613) 297-3769 ( )

FAX No. - N° de FAX
( ) -

Destination - of Goods, Services, and Construction:
Destination - des biens, services et construction:
Dokis, Ontario .... see herein

Instructions: See Herein

Instructions: Voir aux présentes

Vendor/Firm Name and Address
Raison sociale et adresse du fournisseur/de l'entrepreneur

Delivery Required - Livraison exigée
2019-04-15

Delivery Offered - Livraison proposée

Vendor/Firm Name and Address
Raison sociale et adresse du fournisseur/de l'entrepreneur

Telephone No. - N° de téléphone
Facsimile No. - N° de télécopieur

Name and title of person authorized to sign on behalf of Vendor/Firm (type or print)
Nom et titre de la personne autorisée à signer au nom du fournisseur/ de l'entrepreneur (taper ou écrire en caractères d'imprimerie)

Signature **Date**

Issuing Office - Bureau de distribution
Electrical & Electronics Products Division
L'Esplanade Laurier
East Tower, 4th floor,
Ottawa
Ontario
K1A 0S5

Canada

Item Article	Description	Dest. Code Dest.	Inv. Code Fact.	Qty Qté	U. of I. U. de D.	Unit Price/Prix unitaire FOB/FAM Destination	Plant/Usine	Delivery Req. Livraison Req.	Del. Offered Liv. offerte
1	FRD Gate Motor #1 rebuild For repair and installation of Gate Motor as per Annex A, Statement of Work Pricing to be completed at Annex D Financial Bid, Pricing to be determined as per Annex B, C and D	EN414	EP168	1	LOT	$	XXXXXXXXXX	2019-04-15	

TABLE OF CONTENTS

Attachments:

Annex A - Statement of Work
Annex B - Basis of Payment
Annex C - Procedure for Processing Unscheduled Work
Annex D – Financial Bid Presentation Sheet

PART 1 - GENERAL INFORMATION

1.1 Security Requirements

There is no security requirement associated with the requirement.

1.2 Statement of Work/Requirement

The contractor must provide the goods and services in accordance with the technical requirements stated herein at Annex A.

1.2.1 Delivery Requirement

Delivery is requested to be completed by April 15, 2019.

1.3 Debriefings

Bidders may request a debriefing on the results of the bid solicitation process. Bidders should make the request to the Contracting Authority within 15 working days from receipt of the results of the bid solicitation process. The debriefing may be in writing, by telephone or in person.

1.4 Trade Agreements

The requirement is subject to the provisions of the North American Free Trade Agreement (NAFTA) and the Canadian Free Trade Agreement (CFTA).

PART 2 - BIDDER INSTRUCTIONS

2.1 Standard Instructions, Clauses and Conditions

All instructions, clauses and conditions identified in the bid solicitation by number, date and title are set out in the Standard Acquisition Clauses and Conditions Manual (https://buyandsell.gc.ca/policy-and-guidelines/standard-acquisition-clauses-and-conditions-manual) issued by Public Works and Government Services Canada.

Bidders who submit a bid agree to be bound by the instructions, clauses and conditions of the bid solicitation and accept the clauses and conditions of the resulting contract.

The 2003 (2017-04-27) Standard Instructions - Goods or Services - Competitive Requirements, are incorporated by reference into and form part of the bid solicitation.

Subsection 5.4 of 2003, Standard Instructions - Goods or Services - Competitive Requirements, is amended as follows:

Delete: 60 days
Insert: 90 days

The 2003 standard instructions is amended as follows:

- Section 5, entitled Submission of bids, is amended as follows:
  - Subsection 1 is deleted entirely and replaced with the following: "Canada requires that each bid, at solicitation closing date and time or upon request from the Contracting Authority, for example in the case of epost Connect service, be signed by the Bidder or by an authorized representative of the Bidder. If a bid is submitted by a joint venture, it must be in accordance with the section entitled Joint venture."
  - subsection 2.d is deleted entirely and replaced with the following: "send its bid only to the specified Bid Receiving Unit of Public Works and Government Services Canada (PWGSC) identified in the bid solicitation, or to the address specified in the bid solicitation, as applicable;"
  - subsection 2.e is deleted entirely and replaced with the following: "ensure that the Bidder's name, return address and procurement business number, bid solicitation number, and solicitation closing date and time are clearly visible on the bid; and,"
- Section 6, entitled Late bids, is deleted entirely and replaced with the following: "PWGSC will return bids delivered after the stipulated solicitation closing date and time, unless they qualify as a delayed bid as described in the section entitled Delayed bids. For bids submitted using means other than the Canada Post Corporation's epost Connect service, the bid will be returned. For bids submitted using Canada Post Corporation's epost Connect service, conversations initiated by the Bid Receiving Unit via the epost Connect service that contain access, records and information pertaining to a late bid will be deleted."
- Section 07, entitled Delayed bids, is amended as follows:
  - Subsection 1 is amended to add the following piece of evidence: "d. a CPC epost Connect service date and time record indicated in the epost Connect conversation activity."
- Section 8, entitled Transmission by facsimile, is deleted and replaced by the following: "Transmission by facsimile or by epost Connect
  1. Facsimile
     a. Unless specified otherwise in the bid solicitation, bids may be submitted by facsimile. The only acceptable facsimile number for responses to bid solicitations issued by PWGSC headquarters is 819-997-9776 or, if applicable, the facsimile number identified in the bid solicitation. The facsimile number for responses to bid solicitations issued by PWGSC regional offices is identified in the bid solicitation.

b. For bids transmitted by facsimile, Canada will not be responsible for any failure attributable to the transmission or receipt of the faxed bid including, but not limited to, the following:
   i. receipt of garbled or incomplete bid;
   ii. availability or condition of the receiving facsimile equipment;
   iii. incompatibility between the sending and receiving equipment;
   iv. delay in transmission or receipt of the bid;
   v. failure of the Bidder to properly identify the bid;
   vi. illegibility of the bid; or
   vii. security of bid data.

c. A bid transmitted by facsimile constitutes the formal bid of the Bidder and must be submitted in accordance with the section entitled Submission of bids.

2. ePost Connect

a. Unless specified otherwise in the bid solicitation, bids may be submitted by using the epost Connect service provided by Canada Post Corporation (https://www.canadapost.ca/web/en/products/details.page?article=epost_connect_send_a).

b. To submit a bid using epost Connect service, the Bidder must either:
   i. send directly its bid only to the specified PWGSC Bid Receiving Unit, using its own licensing agreement for epost Connect provided by Canada Post Corporation; or
   ii. send as early as possible, and in any case, at least six business days prior to the solicitation closing date and time, an email that includes the bid solicitation number to the specified PWGSC Bid Receiving Unit requesting to open an epost Connect conversation. Requests to open an epost Connect conversation received after that time may not be answered.

c. If the Bidder is sending an email to the Bid Receiving Unit, the Bid Receiving Unit will then initiate an epost Connect conversation which will allow the Bidder to transmit its bid afterward at any time prior to the solicitation closing date and time. The epost Connect conversation will create an email notification from Canada Post Corporation prompting the Bidder to access the message within the conversation, and the Bidder can reply to the email notification by transmitting its bid.

d. If the Bidder is using its own licensing agreement to send its bid, the Bidder must keep the epost Connect conversation open until at least 30 business days after solicitation closing date and time.

e. The email address of PWGSC Bid Receiving Unit in Headquarters is: TPSGC.DGAreceptiondessoumissions-ABBidReceiving.PWGSC@tpsgc-pwgsc.gc.ca. The solicitation number must be identified in the epost Connect message field of all electronic transfers.

f. It should be noted that the use of epost Connect service requires a Canadian mailing address. Should a bidder not have a Canadian address, they may use the Bid Receiving Unit address specified on page 1 of the solicitation in order to register for the epost Connect service.

g. For bids transmitted by epost Connect service, Canada will not be responsible for any failure attributable to the transmission or receipt of the bid including, but not limited to, the following:
   i. receipt of a garbled or incomplete bid;
   ii. availability or condition of the epost Connect service;
   iii. incompatibility between the sending and receiving equipment;
   iv. delay in transmission or receipt of the bid;
   v. failure of the Bidder to properly identify the bid;
   vi. illegibility of the bid;
   vii. security of bid data; or
   viii. inability to create an electronic conversation through the epost Connect service.

h. A bid transmitted by epost Connect service constitutes the formal bid of the Bidder and must be submitted in accordance with the section entitled Submission of bids."

2.1.1 *SACC Manual* Clauses

SACC Reference	Section	Date
A9033T	Financial Capability	2012-07-16
B1000T	Condition of Material	2014-06-26

2.2 Submission of Bids

Bids must be submitted ONLY TO THE BID RECEIVING UNIT by the date, time and place indicated on page 1 of the bid solicitation. Do not send proposal directly to the Contracting Officer.

PWGSC Bids Receiving Unit
11 Laurier Street, Place du Portage, Phase 3, Core 0B2,
Gatineau, Québec, K1A 0S5
Tel.: 819-420-7201 Fax: 819-997-9776

2.3 Enquiries - Bid Solicitation

All enquiries must be submitted in writing to the Contracting Authority no later than ten (10) calendar days before the bid closing date. Enquiries received after that time may not be answered.

Bidders should reference as accurately as possible the numbered item of the bid solicitation to which the enquiry relates. Care should be taken by Bidders to explain each question in sufficient detail in order to enable Canada to provide an accurate answer. Technical enquiries that are of a proprietary nature must be clearly marked "proprietary" at each relevant item. Items identified as "proprietary" will be treated as such except where Canada determines that the enquiry is not of a proprietary nature. Canada may edit the question(s) or may request that the Bidder do so, so that the proprietary nature of the question(s) is eliminated, and the enquiry can be answered to all Bidders. Enquiries not submitted in a form that can be distributed to all Bidders may not be answered by Canada.

2.4 Applicable Laws

Any resulting contract must be interpreted and governed, and the relations between the parties determined, by the laws in force in Ontario.

Bidders may, at their discretion, substitute the applicable laws of a Canadian province or territory of their choice without affecting the validity of their bid, by deleting the name of the Canadian province or territory specified and inserting the name of the Canadian province or territory of their choice. If no change is made, it acknowledges that the applicable laws specified are acceptable to the Bidders.

PART 3 - BID PREPARATION INSTRUCTIONS

3.1 Bid Preparation Instructions

If the Bidder chooses to submit its bid electronically, Canada requests that the Bidder submits its bid in accordance with section 8 of the 2003 standard instructions and as amended in Part 2 - Bidder Instructions, Article 2.1 Standard Instructions, Clauses and Conditions. Bidders are required to provide their bid in a single transmission. The epost Connect service has the capacity to receive multiple documents, up to 1GB per individual attachment.

The bid must be gathered per section and separated as follows:

Section I: Technical Bid
Section II: Financial Bid
Section III: Certifications

If the Bidder is simultaneously providing a hard copy of the bid using another acceptable delivery method, and if there is a discrepancy between the wording of the soft copy and the hard copy, the wording of the soft copy will have priority over the wording of the hard copy.

If the Bidder chooses to submit its bid in hard copies, Canada requests that the Bidder submits its bid in separately bound sections as follows:

- Section I: Technical Bid (2 hard copies)
- Section II: Financial Bid (1 hard copy)
- Section III: Certifications (1 hard copy)

Prices must appear in the financial bid (Annex D) only. No prices must be indicated in any other section of the bid.

Canada requests that bidders follow the format instructions described below in the preparation of hard copy of their bid:

(a) use 8.5 x 11 inch (216 mm x 279 mm) paper;
(b) use a numbering system that corresponds to the bid solicitation.

In April 2006, Canada issued a policy directing federal departments and agencies to take the necessary steps to incorporate environmental considerations into the procurement process Policy on Green Procurement (http://www.tpsgc-pwgsc.gc.ca/ecologisation-greening/achats-procurement/politique-policy-eng.html). To assist Canada in reaching its objectives, bidders should:

1) use 8.5 x 11 inch (216 mm x 279 mm) paper containing fiber certified as originating from a sustainably-managed forest and containing minimum 30% recycled content; and
2) use an environmentally-preferable format including black and white printing instead of colour printing, printing double sided/duplex, using staples or clips instead of cerlox, duotangs or binders.

Section I: Technical Bid

In their technical bid, Bidders should explain and demonstrate how they propose to meet the requirements and how they will carry out the Work.

Section II: Financial Bid

Bidders must submit their financial bid in accordance with the Basis of Payment. (reference Annex B, Annex C and Part 6, clause 6.6.1) Bid Pricing must be submitted in Annex D – Financial Bid Presentation Sheet.

3.2 Exchange Rate Fluctuation

The requirement does not offer exchange rate fluctuation risk mitigation. Requests for exchange rate fluctuation risk mitigation will not be considered. All bids including such provision will render the bid non-responsive.

Section III: Certifications

Bidders must submit the certifications and additional information required under Part 5.

3.3 Delivery Offered

While delivery is requested as indicated above, the best delivery that could be offered is_____.

3.3.1 Contractor's Representative

Name and telephone number of the person responsible for: (will be inserted at contract)

General enquiries		**Delivery follow-up**	
Name:	_____	Name:	_____
Telephone:	_____	Telephone:	_____
Facsimile:	_____	Facsimile:	_____
E-mail:	_____	Email:	_____

PART 4 - EVALUATION PROCEDURES AND BASIS OF SELECTION

You are reminded that this solicitation requires the compliance and/or completion of requirements attached as an Annex and forming part of this document.

4.1 Evaluation Procedures

(a) Bids will be assessed in accordance with the entire requirement of the bid solicitation including the technical and financial evaluation criteria.
(b) An evaluation team composed of representatives of Canada will evaluate the bids.

4.1.1 Technical Evaluation

All bids must be completed in full and provide all of the information requested in the bid solicitation to enable full and complete evaluation.

4.1.1.1 Mandatory Technical Criteria

The following Mandatory requirements must be submitted with the bid for evaluation

- Technical compliance herein.

4.1.2 Financial Evaluation

The following Mandatory factors will be taken into consideration in the evaluation of each offer: * Compliance with Pricing Basis;

The Offer price will be determined as follows:
a. Sum of all items total price (unit prices x qty.) Annex D, Line E. (aggregate grouping basis)

4.1.2.1 Pricing Basis

The bidder must quote firm unit and lot prices as applicable in Canadian dollars DDP Delivered Duty Paid (Dokis, Ontario), Applicable Taxes extra, as applicable. Freight charges to destination and all applicable Custom duties and Excise taxes must be included.

4.2 Basis of Selection

A bid must comply with the requirements of the bid solicitation and meet all mandatory technical evaluation criteria to be declared responsive. The responsive bid with the "lowest evaluated price on an aggregate basis" will be recommended for award of a contract

PART 5 – CERTIFICATIONS AND ADDITIONAL INFORMATION

Bidders must provide the required certifications and additional information to be awarded a contract.

The certifications provided by Bidders to Canada are subject to verification by Canada at all times. Unless specified otherwise, Canada will declare a bid non-responsive, or will declare a contractor in default if any certification made by the Bidder is found to be untrue whether made knowingly or unknowingly, during the bid evaluation period or during the contract period.

The Contracting Authority will have the right to ask for additional information to verify the Bidder's certifications. Failure to comply and to cooperate with any request or requirement imposed by the Contracting Authority will render the bid non-responsive or constitute a default under the Contract.

5.1 Certifications Required with the Bid

Bidders must submit the following duly completed certifications as part of their bid.

5.1.1 Integrity Provisions - Declaration of Convicted Offences

In accordance with the Integrity Provisions of the Standard Instructions, all bidders must provide with their bid, **if applicable**, the declaration form available on the Forms for the Integrity Regime website (http://www.tpsgc-pwgsc.gc.ca/ci-if/declaration-eng.html), to be given further consideration in the procurement process.

5.2 Certifications Precedent to Contract Award and Additional Information

The certifications and additional information listed below should be submitted with the bid, but may be submitted afterwards. If any of these required certifications or additional information is not completed and submitted as requested, the Contracting Authority will inform the Bidder of a time frame within which to provide the information. Failure to provide the certifications or the additional information listed below within the time frame provided will render the bid non-responsive.

5.2.1 Integrity Provisions – Required Documentation

In accordance with the section titled Information to be provided when bidding, contracting or entering into a real procurement agreement of the Ineligibility and Suspension Policy (http://www.tpsgc-pwgsc.gc.ca/ci-if/politique-policy-eng.html), the Bidder must provide the required documentation, as applicable, to be given further consideration in the procurement process.

5.2.2 General Environmental Criteria Certification

The Bidder must select and complete one of the following two certification statements.

A) The Bidder certifies that the Bidder is registered or meets ISO 14001.

_____ _____
Bidders' Authorized Representative Signature Date

OR

B) The Bidder certifies that the Bidder meets and will continue to meet throughout the duration of the contract, a minimum of four (4) out of six (6) criteria identified in the table below.

The Bidder must indicate which four (4) criteria, as a minimum, are met.

Green Practices within the Bidders' organization	**Insert a checkmark for each criterion that is met**
Promotes a paperless environment through directives, procedures and/or programs	
All documents are printed double sided and in black and white for day to day business activity unless otherwise specified by your client	
Paper used for day to day business activity has a minimum of 30% recycled content and has a sustainable forestry management certification	
Utilizes environmentally preferable inks and purchase remanufactured ink cartridges or ink cartridges that can be returned to the manufacturer for reuse and recycling for day to day business activity.	
Recycling bins for paper, newsprint, plastic and aluminum containers available and emptied regularly in accordance with local recycling program.	
A minimum of 50% of office equipment has an energy efficient certification.	

_____ _____
Bidders' Authorized Representative Signature Date

5.2.3 Federal Contractors Program for Employment Equity - Bid Certification

By submitting a bid, the Bidder certifies that the Bidder, and any of the Bidder's members if the Bidder is a Joint Venture, is not named on the Federal Contractors Program (FCP) for employment equity "FCP Limited Eligibility to Bid" list available at the bottom of the page of the Employment and Social Development Canada (ESDC) - Labour's website (https://www.canada.ca/en/employment-social-development/programs/employment-equity/federal-contractor-program.html#).

Canada will have the right to declare a bid non-responsive if the Bidder, or any member of the Bidder if the Bidder is a Joint Venture, appears on the "FCP Limited Eligibility to Bid" list at the time of contract award.

PART 6 - RESULTING CONTRACT CLAUSES

The following clauses and conditions apply to and form part of any contract resulting from the bid solicitation.

6.1 Security Requirements

6.1.1 There is no security requirement applicable to the Contract.

6.2 Statement of Work/Requirement

The contractor must provide the goods and services in accordance with the technical requirements stated herein.

6.2.1 SACC Manual Clauses

SACC Reference	Section	Date
B1501C	Electrical Equipment	2006-06-16
B7500C	Excess Goods	2006-06-16

6.3 Standard Clauses and Conditions

All clauses and conditions identified in the Contract by number, date and title are set out in the Standard Acquisition Clauses and Conditions Manual (https://buyandsell.gc.ca/policy-and-guidelines/standard-acquisition-clauses-and-conditions-manual) issued by Public Works and Government Services Canada.

6.3.1 General Conditions

2010A (2016-04-04), General Conditions - Goods (Medium Complexity), apply to and form part of the Contract.

6.4 Term of Contract

6.4.1 Delivery Date

All the deliverables must be received on or before _____ (Delivery as offered and as accepted will be inserted at contract award).

6.5 Authorities

6.5.1 Contracting Authority

The Contracting Authority for the Contract is:
Louie Turner, Supply Specialist
Public Works and Government Services Canada - Acquisitions Branch
Logistics, Electrical, Fuel and Transportation Directorate - "HN" Division
7B3, Place du Portage, Phase III, 11 Laurier Street, Gatineau, QC, K1A 0S5
Telephone: (613) 297-3769
E-mail address: louie.turner@pwgsc-tpsgc.gc.ca

The Contracting Authority is responsible for the management of the Contract and any changes to the Contract must be authorized in writing by the Contracting Authority. The Contractor must not perform work in excess of or outside the scope of the Contract based on verbal or written requests or instructions from anybody other than the Contracting Authority.

6.5.2 Project Authority

The Project Authority for the Contract is: (will be inserted at contract)
Name: _____
Title: _____
Telephone: _____
E-mail: _____

The Project Authority is the representative of the department or agency for whom the Work is being carried out under the Contract and is responsible for all matters concerning the technical content of the Work under the Contract. Technical matters may be discussed with the Project Authority; however the Project Authority has no authority to authorize changes to the scope of the Work. Changes to the scope of the Work can only be made through a contract amendment issued by the Contracting Authority.

6.5.3 Technical Authority

The Technical Authority for the Contract is: (will be inserted at contract)
Name:
Title:
Telephone: (xxx) xxx-xxxx
E-mail:

The Technical Authority named above is the representative of the department or agency for whom the Work is being carried out under the Contract and is responsible for all matters concerning the technical content of the Work under the Contract. Technical matters may be discussed with the Technical Authority; however the Technical Authority has no authority to authorize changes to the scope of the Work. Changes to the scope of the Work can only be made through a contract amendment issued by the Contracting Authority.

6.5.4 Contractor's Representative

Name and telephone number of the person responsible for: (will be inserted at contract)

General enquiries		**Delivery follow-up**	
Name:	_____	Name:	_____
Telephone:	_____	Telephone:	_____
Facsimile:	_____	Facsimile:	_____
E-mail:	_____	E-mail:	_____

6.6 Payment

6.6.1 Basis of Payment

In consideration of the Contractor satisfactorily completing all of its obligations under the Contract, the Contractor will be paid firm unit prices and firm lot prices, as specified in the contract and in Annex B for a cost of $ _____ (insert the amount at contract award). Customs duties are included and Applicable Taxes are extra.

6.6.2 Limitation of Price

SACC Manual clause C6000C (2017-08-17) Limitation of Price

6.6.3 Single Payment or Multiple Payments

SACC Manual clause H1001C (2008-05-12) Multiple Payments

6.6.4 Insurance

SACC Manual clause G1005C (2016-01-28) Insurance

6.7 Invoicing Instructions

1. The Contractor must submit invoices in accordance with the section entitled "Invoice Submission" of the general conditions. Invoices cannot be submitted until all work identified in the invoice is completed.

Each invoice must be supported by:

a) a copy of time sheets to support the time claimed;
b) a copy of the release document and any other documents as specified in the Contract;
c) a copy of the monthly progress report.

2. Invoices must be distributed as follows:
(a) The original and one (1) copy must be forwarded to the address shown on page 1 of the Contract for certification and payment.

(b) One (1) copy must be forwarded to the Contracting Authority identified under the Section 5. Authorities

6.8 Certifications and Additional Information

6.8.1 Compliance

Unless specified otherwise, the continuous compliance with the certifications provided by the Contractor in its bid or precedent to contract award, and the ongoing cooperation in providing additional information are conditions of the Contract and failure to comply will constitute the Contractor in default. Certifications are subject to verification by Canada during the entire period of the Contract.

6.9 Applicable Laws

The Contract must be interpreted and governed, and the relations between the parties determined, by the laws in force in _____.

6.10 Priority of Documents

If there is a discrepancy between the wording of any documents that appear on the list, the wording of the document that first appears on the list has priority over the wording of any document that subsequently appears on the list.

(a) the Articles of Agreement;
(b) the general conditions 2010A (2016-04-04), General Conditions - Goods (Medium Complexity);
(c) Annex A, Statement of Work;
(d) the Contractor's bid dated _____ ", as clarified on _____" ***or*** ", as amended on_____"

6.11 SACC Manual Clauses (Delivery)

SACC Reference	Section	Date
D9002C	Incomplete Assemblies	2007-11-30

6.11.1 Shipping Instructions - Delivery at Destination

Goods must be consigned to the destination specified in the Contract and delivered:
(a) Delivered Duty Paid (DDP) Dokis, Ontario Incoterms 2000 for shipments from a commercial contractor.

6.11.2 Shipping – Scheduling

The Contractor must repair, deliver and install the goods to the French River Dam, Dokis, Ontario in co-ordination with (to be inserted at contract award)

ANNEX "A"
STATEMENT OF WORK

TABLE OF CONTENTS

1 SCOPE SUMMARY

The Contractor will provide all labour, supervision, tools, equipment, and materials required to do the following:

- Replace three bevel gearboxes;
- Perform field testing of three motors, their power supply, and their control systems;
- Remove, inspect, diagnose, repair, reinstall, and commission one known defective motor; and,
- Repair and commission other electrical components associated with hoists at the dam as identified through field-testing.

2 SECURITY REQUIREMENT

The Contractor will not have access to the Government computer system or to Protected or Classified information.

Therefore, there is no security requirement for this contract.

3 BACKGROUND

3.1 Portage Dam

Public Works and Government Services Canada (PWGSC) owns and operates the Portage Dam on the French River, near Dokis Ontario. The dam is off Keso Bay Road, which in turn runs off Dokis Reserve Road (see Figures 1-4). **NOTE: there is no cell phone service at Portage Dam.**

The Portage Dam is a three-sluice flow control dam with vertical lift gates set between flanking piers and abutments. The vertical lift gates are controlled by wire rope hoists located on the operational deck of the dam.

The work of this project primarily concerns the motor at "Gate #1," which is the right-hand gate when looking downstream and is the gate nearest to the electrical building on the right abutment (see Figures 5-7), and the bevel gearboxes on the other two gates. There is also a small amount of electrical diagnostic work to the other two gate hoists.

3.2 Description of Gates and Hoists

3.2.1 Gate

Each gate weight is 22,800 lbs and is suspended by four falls of galvanized wire rope (a pair on each side) from the hoist drums. The wire ropes are new as of 2016.

Each gate is fitted with eight wheels with self-lubricating bronze bushings supplied by Anchor Bronze and Metals Inc. and lubricated with Castron Syntec MP grease. The bushings on all gates are new as of 2016.

Each wheel is equipped with a grease tube for which the filling point is on top of its gate for convenient access.

3.2.2 Hoist

3.2.2.1 Controls

Each gate has both a local control panel on the operations deck (the true main control from which the Damkeepers operate the gate) and a so-called "main" control panel in the electrical building which serves as a maintenance or back-up control panel.

3.2.2.2 Motor

Each hoist's motor, brake, and worm gear reducer are a single "Motox" unit by Flender Himmel, Type EL A100 LB 4 D(G) 15. According to the manual, the motor weighs 100 pounds. According to the original shopdrawings (attached to this SOW), the brake is a Flender type G15 integrated disc DC operated brake producing 133 lb-in with a 98V DC coil.

The detailed motor information is as follows:

- 3 HP
- TEFC
- 1.15 SF
- Insulation Class F, IP54, Mounting position B3-01
- 240V, 123.8A, 60 Hz, single phase
- Capacitor start, capacitor run (start capacitor 100 μF 340V; run capacitor 30 μF 440V)
- 1740 RPM

The motor and brake nameplates for Gate #1 are in Figure 21.

Flender Himmel no longer exists as a separate company but has been bought-out by Siemens who have previously indicated that direct replacement units or parts for these specific units are no longer available.

3.2.2.3 Motor Terminal Connections

Note that the terminal connections at Motor #1 have been modified at some time in the past and the connections do not match those at the other gates. The motor has six wires labelled 1 through 6. In the control cabinet the names change and are labelled as follows:

- 1 = L1
- 2 = L2
- 3 = Z2
- 4 = 4A
- 5 = 5A
- 6 = Z1

The wiring of Motor #1's main starter and raise & lower contactors for is given in Figure 15.

3.2.2.4 Remainder of Hoist

After the worm gear reducer, speed is further reduced through a set of spur gears (gear and pinion) both at the hoist and at the wire rope drums.

The maximum normal lifting force from the hoist on the gate is 26,700 lbs.

The lifting and lowering speed is 1.31 feet per minute.

All limit switches associated with the hoist and gate are new as of 2016.

3.2.2.5 Bevel Gearbox –Mechanical Operation

The emergency backup operation of the hoist is through a hand crank mechanism (operated in reality through an electric drill for speed; see Figure 27).

A bevel gearbox by Hub City (model 150) connects through a Lovejoy coupling to allow the hand

crankshaft to turn mechanically the motor shaft without any electricity (see Figures 18, 25, and 26). These gearboxes and their couplings are to be replaced at all three gates as part of the work of this Contract.

3.2.2.6 Limit Switches

Each hoist is fitted with the following limit switches (all new as of 2016):

- **Slack rope limit switch**.—To stop the gate at the sill and also to stop the motor if the gate becomes jammed during lowering, thus preventing excessive unwinding of the main rope from hoist drum. This switch is located under one of the rope drums.
- **Rotary limit switch**.—Three functions: to act as a back-up limit switch on gate closing, in case the slack rope limit switch fails; to stop the gate in the Fully Open position; and to operate the pilot light indicating Gate Fully Lowered on the control panel.
- **Overtravel limit switch**.—To stop the gate 1¼" (30mm) above the Fully Open position, should the rotary limit switch fail. Note that higher position is the Gate Dogged position.
- **Hand crank safety limit switch**.—Located on the hand-drive support, this switch is to automatically disconnect the motor control circuit when the hand drive is connected for use.

3.2.2.7 Dogging

The gates can be "dogged" to hold them in place without the use of the hoist. Each gate has a dogging bracket located just above the second wheel up from the bottom. Built into the embedded parts of the gains, approx. 600mm above the dam deck, is a slot into which dogging bars can be inserted.

To dog the gate, the gate must be lifted 1¼" (30mm) above the Fully Open position to the Gate Dogged position (controlled by overtravel limit switch).

3.2.2.8 Manuals

Schematics, shopdrawings, and OEM manual with product data are all available. The OEM manual for the Motox brakemotor and worm gear unit and also for the Hub City bevel gearbox are attached to this Statement of Work, along with original shopdrawings.

The full operations manual can be made available upon request.

3.2.3 Notes on Hoist Service

Water control gates at Portage Dam are normally adjusted only slightly up or down to control water flow, and even then only a few times a week at most. Therefore, operating times for the gate hoist's motors are very short, with a long period of inactivity in between operations. In the time since the motors were installation at the time of construction, the motors will have seen many starts and stops but relatively few hours of continuous operation.

4 PROBLEM STATEMENT

4.1 When Motor #1 was Working

Motor #1 received an electrical inspection (including load testing) as part of a regular dam inspection in 2013. The motor was working properly at that time. The inspection included motor ohm readings (megger 1000V) which found Phase A to ground 1420 MΩ and Phase B to ground 1580 MΩ. The Phase A current maximum was 10.76A, and the Phase B current maximum was 10.75A which the inspector said fell into range for this motor's rating. A copy of the report is attached to this SOW.

4.2 First Failure & Component Replacement

Motor #1 stopped working properly in the fall of 2016. Out of 10 attempts to raise the gate, the motor ran 3 times, the other 7 times, there was an audible buzzing sound. During the site investigations, the motor inrush current was 60A and the running current was 10 to 11A (when the motor actually ran). The motor spindle and gearbox were not seized and could be turned freely by hand and there did not appear to be any play in the bearings. The contactors were checked and were operating correctly. The overload resets itself, as it is set to automatic reset mode. The overall appearance of the motor connection box was messy, the wires were not marked, and were brittle. The motor was not further diagnosed at that time and instead the gate was operated in mechanical mode only.

In 2017, Motor #1 was removed to a motor shop who found that the bearings were good, but a contactor and brake rectifier were damaged and original parts for these were no longer available. The motor was not meggered at that time and there is no report of any inspection of the centrifugal switch, good or bad. The motor shop at the time recommended that the motor be replaced, but a search for an exact replacement motor was unsuccessful. The motor was re-installed on the dam to again be used mechanically through the bevel gearbox (backup operation mechanism).

Meanwhile, replacement components with similar characteristics (for the contactor and brake rectifier) were selected by an electrical engineer, purchased, and were installed in 2018. Motor #1 was bumped and proved to work.

4.3 Second (Present) Failure

After the component replacement, however, when called upon to lift the Gate #1, Motor #1 could not raise the gate for more than a few seconds before tripping the local reset. During that raise, there was a lot of noise and vibration as well as a burning smell coming from the motor, which was hot to the touch. The current was 60A, however, the overload did not trip, only the soft reset at the local control centre.

Further, there appeared to be significant misalignment between the bevel gearbox and the motor, probably the cause of the vibration; it appeared the motor had not been re-installed properly after the previous work. Even when operating the gate mechanically though the bevel gearbox, the motor was reported to still be running hot, possibly due to a misalignment or possibly due to a bent motor shaft.

Finally, some of the wheels on the dam gate did not turn and the wire ropes coming from the two drums were of different tensions; the gate seemed to be slightly askew in the gains.

For the motor, there could well be additional electrical defects that were not diagnosed in 2017 (perhaps problems with the centrifugal switch and overload). In addition, there has been some unknown degree of damage done to the motor recently, both operating it mechanically in the intervening period as well as the brief attempt to operate it electrically (the burning smell indicates potential damage).

4.4 Objective

PWGSC wishes to restore the existing motor to full operating condition, as it was when it was first installed in the 1990s, and using the same start and control configuration. We are not interested in any "upgrades" to motor or starting system.

Note that purchasing a new motor is not a practical option—we have already pursued this avenue and found it fruitless due to three great limitations on selection of replacement motors:

- the motor has to fit geometrically between two existing gearboxes,
- the face end of the motor has to be fitted with a gear to drive the worm gearbox whilst the fan end has to have an extended shaft for the coupling to the bevel gearbox, and
- there is no three-phase power available on site.

Therefore, although it is unusual to repair such a small motor, this is nevertheless the option we wish to

pursue.

It is understood that exact drop-in replacement electrical components for the motor may be difficult or impossible to obtain. Contractor must be prepared to select components from other manufacturers with similar characteristics to the original, including supplying the assistance of an electrical engineer, such as the technical support staff available to EASA member companies, or others, if this is required for component selection purposes.

5 TECHNICAL REQUIREMENTS

5.1 References

Comply with the following:

1) ANSI/EASA Standard AR100 *Recommended Practice for the Repair of Rotating Electrical Apparatus*
2) CAN/CSA C22.1, latest edition, *Canadian Electrical Code*, Part 1, (CEC), and all Local Amendments
3) CAN/CSA Z460, latest edition, *Control of hazardous energy - Lockout and other methods*
4) CAN/CSA Z462, latest edition, *Workplace Electrical Safety Standard*
5) *Manuals* from Original Equipment Manufacturers (OEM manuals)
6) O. Reg. 224/07 *Spill Prevention and Contingency Plans*
7) O. Reg. 347 *General - Waste Management*, as amended
8) O. Reg. 490/09 *Designated Substances*
9) R.R.O. 1990, Reg. 360 *Spills*
10) *Workplace Hazardous Materials Information System* (WHMIS 2015)
11) *Workplace Safety and Insurance Act*, 1997, S.O. 1997, c. 16, Sched. A, R.R.O. 1990; Reg. 1101 *First Aid Requirements*

5.2 TASK 1 - Preliminary Submittals

Submit the following preliminary documentation no later than 14 calendar days after Award:

1) **Project Manager**'s name and contact information (ref. Section 6.1 of this SOW)
2) **Schedule** (ref. Section 6.3 of this SOW)
3) **Health and Safety Submittals** (ref. Section 6.7.2 of this SOW)
4) **Environmental Protection Plan** (ref. Section 6.8.2 of this SOW)

Technical Authority will review and comment on submittals. Contractor must revise and resubmit. This process will continue until acceptable submittals have been made.

Contractor may not go on site until acceptable submittals have been received.

5.3 TASK 2 - Replace Three Bevel Gearboxes (Work at Dam)

1) Remove existing Hub City bevel gearboxes and existing Lovejoy couplings at all three Gates. Dispose of these.
2) Supply and install new bevel gearbox and new coupling at all three Gates, installing them as per manufacturer's instructions. In order to fit inside the custom-made housings, use the same make and model of bevel gearboxes.
3) Submit product data for selected gearboxes, couplings, and lubricants to Technical Authority before placing order. Submit MSDS for lubricants.

5.4 TASK 3 - Testing in the Field & Removals (Work at Dam)

The Contractor will find the gate in its dogged-open position and will find that maintenance stoplogs will have been placed in the maintenance gains some distance upstream of the gate.

Gate #1 and its gains will likely be covered in a considerable amount of ice, but the Damkeepers will remove this ice for the Contractor; keep in communications with Damkeepers about exact arrival times of the Contractor's crew on site so that the Damkeepers can de-ice the gates and gains in preparation for the work of this Task. Give a minimum of 72 hours' notice, as the de-icing operations take some time.

1) **Preparations**

   a) Confirm wiring for Motor #1's raise and lower contactors and main starter is indeed connected as shown in Figure 15.

   b) Prepare similar wiring diagram for Motor #2 and Motor #3, which we understand to be different from Motor #1 and which may also be different from each other.

   c) Ensure terminal leads at all motors are marked or coloured as necessary to indicate correct connections when re-installing in the field. Provide such markings on the wires whenever they are missing.

   d) Remove Motor #1 and package it ready for transport to motor shop.

2) **Load Test Motors & Check Components of Power & Control Systems at Hoists #2 and #3**

   a) Perform load testing at Motor #2 and Motor #3, logging current and voltage in both A & B phases during both raising and lowering of gates, similar to what was done at the electrical and motor inspection of 2013.

   b) Check for correct functioning of all components of each of Hoist #2 and Hoist #3's power supply and control systems (within both local panels on deck and "main" panel in electrical building) and note all defects found. This must include, but need not be limited to:

      i) Check motor contactors for signs of arcing. Check that springs feel solid and free.

      ii) Determine why rotary encoder is not working.

      iii) Check motor overloads and protective relays

      iv) Check fuses

      v) Check switches

      vi) Check grounding system

3) **Check Power & Control System at Hoist #1**

   a) Remove Motor #3 and install it in Hoist #1, using starter and contactor wiring appropriate to Motor #1.

   b) Check that wire rope is in proper position on Hoist #1's drums, and take up slack as needed by turning the hoist through the mechanical drive mechanism. Take gate weight on the hoist and remove dogging bars.

   c) Attempt to lower and raise the gate electrically to enable mechanical inspection of hoist, but monitor motor current during this process to ensure that motor is not damaged in this exercise, stopping electrical test if damage would occur and using the mechanical drive mechanism instead.

   d) Check for correct functioning of all components of Hoist #1's power supply and control systems (within both local panels on deck and "main" panel in electrical building) and note all defects found. This must include, but need not be limited to:

      i) Determine the trigger that is causing the local reset to trip

ii) Check motor contactors for signs of arcing and check that springs feel solid and free

iii) Determine why rotary encoder is not working

iv) Check motor overloads and protective relays

v) Check fuses

vi) Check switches

vii) Check grounding system

e) Leave Gate #1 in its raised and dogged position.

f) Re-install Motor #3 back home in Hoist #3, using its appropriate starter and contactor wiring for Motor #3. Raise and lower Gate #3 to prove that motor has been installed properly.

4) Remove Motor #1 to Motor Shop

a) Provide protection for Hoist #1's worm gearbox similar to that shown in Figure 19 during previous work.

b) Transport Motor #1 to motor shop.

5.5 TASK 4 - Inspect Motor #1 (Work in Motor Shop)

1) Perform a complete and detailed inspection of the brake and the motor and all their parts, recording condition of all components and taking dimensions as necessary for reassembly, condition assessment, and fault diagnosis.

2) Follow documentation and inspection practices from ANSI/EASA AR100 *Recommended Practice for the Repair of Rotating Electrical Apparatus*.

3) Ensure wiring in terminal box is marked or coloured as necessary to indicate correct connections, and provide such markings where these are missing.

4) Mechanical inspection must include, but need not be limited to, the following:

a) check roller bearings

b) examine rotor shaft at the bottom end (where the motor connects to the worm gear reducer) and at the top end (where the motor connects to the Lovejoy coupling). Assess the degree of damage. Check that the shaft is actually straight and rotates without vibration. Check for wear, cracks, and scoring.

5) Electrical inspection must include, but need not be limited to, the following:

a) Megger windings and check windings for shorts, open circuits, deteriorating components, and all other potential defects

b) check for evidence of damage to wiring caused by overheating (recall the burning smell reported in 2018—see paragraph 4.3 of this SOW)

c) examine at minimum the centrifugal switch, the overloads, and the capacitors

d) check condition of wiring and all components in the terminal box

5.6 TASK 5 - Prepare "As-Found Condition Report" (Work in Motor Shop)

1) Prepare a comprehensive report on the Motor #1'sfailure and also defects in the power and control system all three hoists as found through the work of *Task 2 Testing in the Field & Removals*.

2) Identify root cause of failures; do not merely report on symptoms.

3) Submit wiring diagram for main starter and raise & lower contactors for Motor #2 and Motor #3 as well

as any modifications to existing diagram for Motor #1. Propose possible explanations for differences in these arrangements. Recommend which way of doing it would be better, or if there is really no difference between them.

4) Make recommendations to add, delete, or modify the repairs currently envisioned and described below for *Task 5 - Repair Motor #1* and *Task 6 - Electrical Repairs at Dam*.

5) Identify which components will have to be sent to specialty sub-contractors if work cannot be performed at motor shop facility.

6) Include a quote for each recommendation, with details of the work, number of hours expected, and prices for parts that need to be replaced due to damage or excessive wear.

7) Transmit report to Technical Authority. Participate in telecon with Technical Authority to discuss and answer questions. Technical Authority will respond in writing with revised scope of work for repairs. Contracting Authority will respond with Amendments as required.

5.7 TASK 6 - Repair Motor #1 (Work in Motor Shop)

1) Those recommendations from the As-Found Condition Report that the Technical Authority has authorized will be treated as "Unscheduled Work" for the purposes of payment.

2) **Repairs**.—Exact scope of repair work will be confirmed and adjusted though the "As-Found Condition Report" described above. Although scope of repair work may go so far as needing to rewind the motor, at the present time, the work to the motor is expect to consist of the following work:

   a) Change start and run capacitors for new

   b) Change the centrifugal switch for new

   c) Work to terminal box:

      i) Change the wires in the terminal box for new

      ii) Change the gasket on the terminal box cover for new

      iii) Change gland at cable entry for new

   d) Change the overloads for new and set to appropriate amounts.

   e) Balance rotor shaft to a balance quality grade suitable for this RPM. Locate balance weights so they do not interfere with other components

   f) Re-assemble motor

3) **Testing**

   a) Verify that all aspects of the repaired motor are as per original manufacturer's manual

   b) Ensure air gap is uniform and conforms to original manufacturer's specifications

   c) Test motor in the shop at full voltage for correct operation in forward and reverse directions and test operation of the motor brake

4) Package motor for shipping back to the dam

5) Work will include selection of alternative components with same electrical and physical characteristics in cases where exact replacement components are no longer available.

6) Prepare a written report of work done and test results achieved, including for all work done by specialized subcontractors.

5.8 TASK 7 - Electrical Repairs at Dam (Work at Dam)

1) It is expected that the As-Found Condition Report will recommend some other electrical work at any or

all of the three hoists at the dam.

2) Those recommendations that the Technical Authority has authorized will be treated as "Unscheduled Work" for the purposes of payment.

5.9 TASK 8 - Reinstall & Commission Motor #1 (Work at Dam)

1) Keep in communications with Damkeepers about exact arrival times on site so that they can de-ice the gate and gains in preparation. Give a minimum of 72 hours' notice.
2) Transport Motor #1 to dam site and re-install, making all electrical and mechanical connections required.
3) Commission Motor #1 by undertaking at least the following field tests:
   a) Check for free play of all lever-type limit switches as actuated by hand.
   b) Move the gate up and down about a foot using the mechanical operating mode with the electric drill. Damkeepers will do the actual drill operation, but the Contractor is to monitor the mechanical behaviour of the hoist during this process.
   c) Move the gate between the Fully Closed and Fully Open positions under electrical power. Do one test from the local control panel and the other test from the control panel in the building. During movement, check for smooth, quiet, and correct operation. During electrical operation, continuously monitor the motor current and voltage via a data logging device; stop the process if the motor will be damaged.
   d) Check operation of all limit switches as actuated by gate motion.
   e) Stop twice during the electrical operation for about 5 minutes and check that the brake holds and the load does not drift.
4) After testing, leave the gate it in the position to be indicated by the Technical Authority shortly before the commissioning (this will depend on water control needs at the time, but is most likely to be the Fully Open position).
5) Technical Authority or delegate will witness field-testing and accept operation or indicate that further adjustments by Contractor will be required before acceptance.
6) Technical Authority and Contracting Authority will authorize in writing further troubleshooting and repairs required due to failed commissioning.
7) **Acceptance Criteria:**
   a) Dam gate moves smoothly through motions, from fully closed to fully open and back again without noise or vibration and without motor tripping or stopping.
   b) Load does not drift.
   c) Motor operating current does not exceed recommended limits.
   d) Motor does not heat up excessively under either electrical or mechanical operation.
   e) Mechanical operation via drill through bevel gearbox is smooth and quiet.

5.10 TASK 9 - Supply & Deliver Spare Parts

Supply and deliver to the Dam Office the following

1) Six centrifugal switches
2) Six start capacitors
3) Six run capacitators
4) One new Hub City bevel gearbox complete with Lovejoy coupling

6 ADMINISTRATIVE REQUIREMENTS

6.1 Project Manager

Appoint a Project Manager to plan, direct, control, and make decisions for the Contractor and who must be the main point of contact between the Contractor and the Technical Authority.

6.2 Team Qualifications

Contractor's team must include the following skill sets:

1) **Electrical firm** working at dam must be a Licensed Electrical Contractor with the Electrical Safety Authority.
2) **Electrician(s)** performing work at the dam must hold either:
   a) Ontario Certificate of Qualification as 309A *Electrician - Construction and Maintenance* or Interprovincial Red Seal as a *Construction Electrician*
   b) Electricians should have extensive motor experience.
3) **Electric motor shop** must be an "active member" or "accredited service centre" of the Electrical Apparatus Service Association (EASA).
4) **Electric motor technicians** should hold either:
   a) Ontario Certificate of Qualification as 446A *Electric Motor System Technician*; or,
   b) Interprovincial Red Seal as an *Electric Motor System Technician*.

6.3 Schedule

1) Submit schedule showing major milestones of work and how the Contractor intends to fulfil the requirements of this SOW.
2) Identify the critical path.
3) Complete all work by March 15, 2019.

6.4 Project Meetings

1) A kick-off meeting will be held within 3 weeks of Award of Contract. The discussion must include, but not necessarily be limited to, a review of the project requirements and the Contractor's schedule and identification of items on critical path.
2) Progress Review Meetings will be held monthly or as mutually agreed between the Technical Authority and the Contractor. The first Progress Review Meeting will be held within one month of the Kick-off Meeting. Progress Review Meetings must encompass total project status as of the review date
3) Meetings will be held by teleconference unless otherwise agreed between the Technical Authority and the Contractor.

6.5 Cooperation

1) Contractor is responsible for coordinating work of his sub-contractors and for supervising them whenever they are on site.
2) The Contractor and his sub-contractors must cooperate with PWGSC employees.

6.6 Communications

1) Communicate on contract administration matters with Contracting Authority.

2) Communicate on technical matters with the Technical Authority.
3) For de-icing requirements and when on-site, communicate directly with the Damkeepers. Note that Damkeepers are not authorized to change scope of work, terms, or conditions of the contract.
4) Communications with the Damkeepers may be in English or Ojibway. Communications with the Contracting or Technical Authority may be in English or in French.

6.7 Health & Safety Requirements

6.7.1 Responsibility

1) Contractor is responsible for health and safety of own personnel and all sub-contractors and must comply with the Ontario Occupational Health and Safety Act, R.S.O. 1990 Chapter 0.1, as amended, and the regulations made under its authority.
2) Provide a Competent Supervisor on site, who is an employee of the Contractor, to be responsible for the site whenever subcontractors are working at the dam.
3) Assign responsibility and obligation to Competent Supervisor to stop or start Work when, at Competent Supervisor's discretion, it is necessary or advisable to do so for reasons of health or safety. Technical Authority may also stop Work for health and safety considerations.
4) Ensure applicable items, articles, notices and orders are posted in conspicuous location on site in accordance with Acts and Regulations of Ontario.
5) Provide all training and personal protective equipment required.
6) Ensure site crew contains appropriate number of persons trained in CPR and First Aid according to Ontario requirements.
7) Immediately address health and safety non-compliance issues, whether identified by authority having jurisdiction or by Technical Authority. Technical Authority may stop Work if non-compliance of health and safety requirements is not corrected.
8) If unforeseen or peculiar safety-related conditions arise during performance of Work, follow procedures in place for Employee's Right to Refuse Work in accordance with Acts and Regulations of Ontario and advise Technical Authority both verbally and in writing.
9) Submit to Technical Authority copies of all reports or directions issued by Federal or Provincial health and safety inspectors, all incident and accident reports.

6.7.2 Existing Known Site Conditions

Currently known hazards and conditions at this site include, but are not necessarily limited to, the following:

1. Remote location
2. No cell phone service
3. Work around open and moving water
4. Cold weather exposure, snow, rain
5. Uneven ground
6. Slippery surfaces
7. Lifting, pulling, and carrying heavy objects
8. Wildlife
9. Tripping hazards on operating deck
10. Contact with lubricating oil and grease

11. Electrical hazards

6.7.3 Health & Safety Submittals

PWGSC requires a variety of submittals proving Contractor compliance with legislated requirements. Hence, submit the following:

1) **Company information**

   a) **Clearance Certificate** from the Workplace Safety Insurance Board (WSIB), or proof of disability insurance coverage from private company. Re-submit with each progress payment. Must be valid at all times during contract.

   b) Company's **Health & Safety Policy Statement** meeting the requirement of the Ontario *Occupational Health and Safety Act*.

   c) Company's **Occupational Health and Safety Program** meeting the requirements of the Ontario *Occupational Health and Safety Act*.

2) **Employee training information**.—For all members of Contractor's team who will be at the dam for this Contract, submit names and proof of health & safety training for all employees in a minimum of the following areas:

   a) Arc Flash

   b) Workplace Hazardous Materials Information System (WHMIS 2015).

   c) First Aid

   d) CPR

   e) Other training to suit hazards identified by Contractor during Hazard Assessment phase of SSHAHSP

3) **Site-Specific Hazard Assessment and Health and Safety Plan (SSHAHSP)**.—Develop written SSHAHSP based on site-specific hazard assessment before starting Work on site. Implement and enforce requirements of SSHAHSP whenever work takes place at the dam site. Submit SSHAHSP for Technical Authority's review. Revise and re-submit as often as required. Technical Authority's review of SSHAHSP should not be construed as approval and does not reduce the Contractor's overall responsibility. SSHAHSP must include the following:

   a) **Part 1 – Safety Hazard Assessment**.—Consider all operations required to effect Work of this contract and identify safety hazards and their probability. Currently known hazards include, but are not necessarily limited to, the ones listed in 6.7.2 *Existing Known Site Conditions* as well as other hazards Contractor foresees arising during Work.

   b) **Part 2 – Mitigation Measures**.— For each safety hazard identified, describe measures and controls that will be used to protect employees and subcontract personnel and for ensuring compliance with applicable laws and regulations. Include name of person(s) responsible for ensuring adherence to SSHAHSP.

   c) **Part 3 – Emergency Contacts**.—This is simply a list of names, roles, and phone numbers, and must include all sub-contractors. Include name of nearest health facility and how they will be contacted during an emergency.

   d) **Part 4 – Contingency and Emergency Response Plan**.—Describe standard operating procedures specific to the project site to be implemented during emergencies.

6.8 Environmental Protection Requirements

6.8.1 Responsibility

1) Contractor is responsible for protection of the environment whenever work takes place at the dam site.

2) Provide all training, equipment, and materials required for environmental protection during work at the dam.

3) Clean up work area on dam as work progresses. Handle wastes in accordance with applicable federal and provincial laws, regulations, codes, and guidelines. Submit all waste disposal certificates to the Technical Authority.

4) Immediately address environmental non-compliance issues, whether identified by authority having jurisdiction or by Technical Authority. Technical Authority may stop Work if non-compliance of environmental requirements is not corrected.

5) Ensure sufficient number and type of spill kit are on-site and available at all times. Be prepared to mitigate, intercept, clean up, and dispose of spills that may occur whether on land or water. Be responsible for all costs of cleaning up any spills.

6) Upon request, provide to the Technical Authority all additional evidence of compliance with municipal, provincial, and federal environmental laws and regulations.

7) Submit copies of all environmental incident and accident reports to Technical Authority.

6.8.2 Environmental Submittals

1) Develop written Environmental Protection Plan (EPP) for work to take place at the dam site, based on an assessment of the environmental hazards specific to the work of this contract.

2) Implement and enforce requirements of EPP whenever work takes place at the dam site.

3) EPP, which is likely to be only a page long and is most conveniently presented in the form of a table, must include the following:

   a) **Part 1 - Environmental Hazard Assessment**.—Examine operations required to complete Work of this contract and identify all types and sources of contaminating or polluting materials. Currently known materials include, but may not necessarily be limited to:

      i) Solid wastes including used rags, cloths, etc.

      ii) Gearbox oil, lubricating oil, and grease

      iii) All other materials and hazards Contractor foresees arising during Work

   b) **Part 2 - Environmental Mitigation Measures**.—For each hazard identified, describe measures and controls that will be used to prevent damage to surrounding environment and for ensuring compliance with Federal, Provincial, and Municipal laws and regulations. Include name of person(s) responsible for ensuring adherence to Environmental Protection Plan.

   c) **Part 3 - Environmental Emergency Measures**.—Describe equipment and procedures to be used in event of unforeseen spill of gearbox oil and all other potential environmental emergencies.

   d) **Part 4 - Waste Disposal**.—Identify methods and locations for hazardous and non-hazardous waste handling and disposal.

6.9 Warranty

1) Warrant all products delivered for minimum 1 year against all defects in design, materials, or workmanship when in normal use during warranty period.

2) Warranty must also cover all sub-components.

3) Furnish all required labour, materials, parts, and all other costs associated with required warranty repairs.

4) Pay cost of shipping parts to place where warranty repairs are to be made.

7 IMAGES

Figure 1: Location of Dokis First Nation

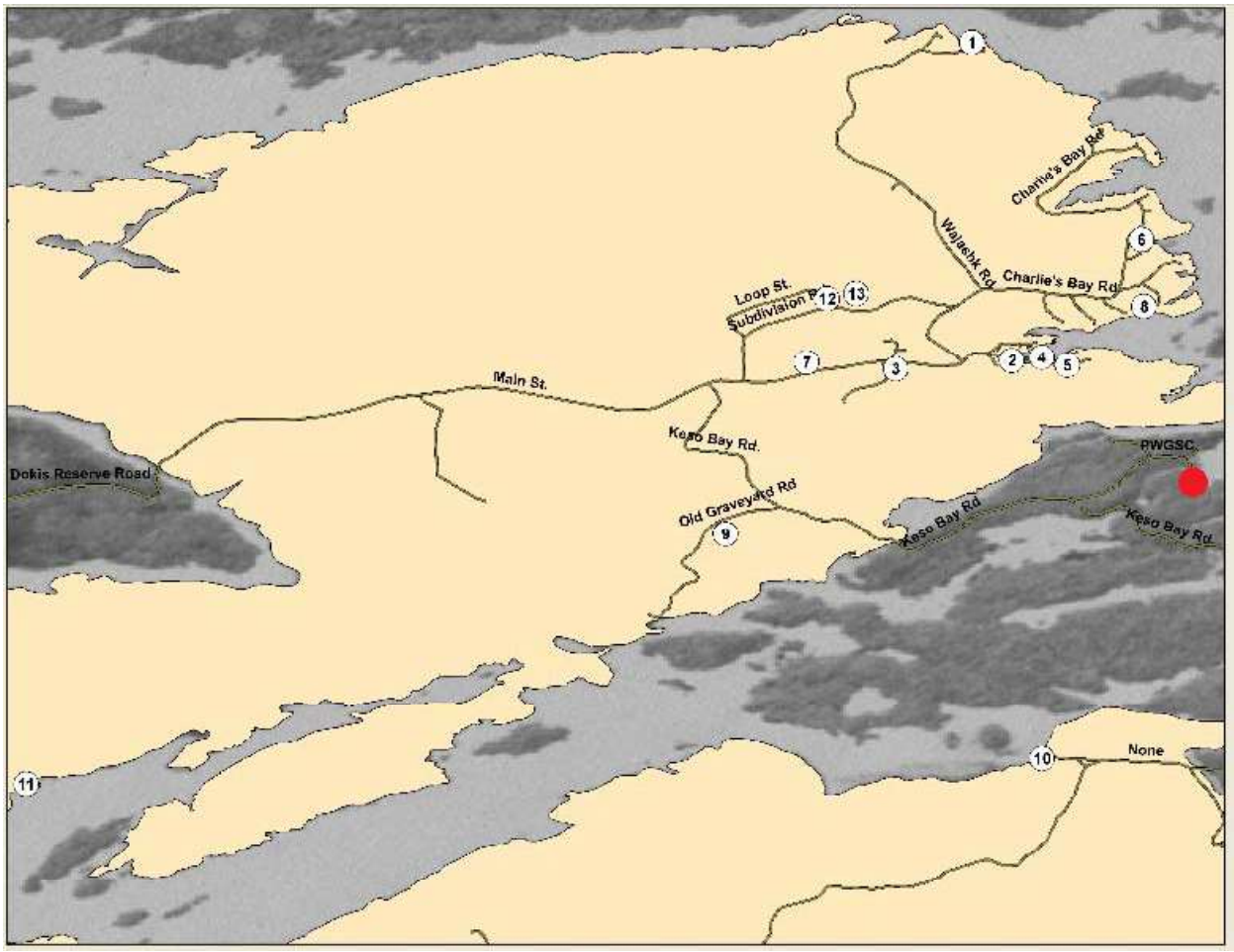

Figure 2: Map of Dokis, Ontario, showing location of Portage Dam (red dot at centre right).

Figure 3 - Detail of Roads Leading to Portage Dam

Figure 4 - Google Maps satellite view showing location of Portage Dam

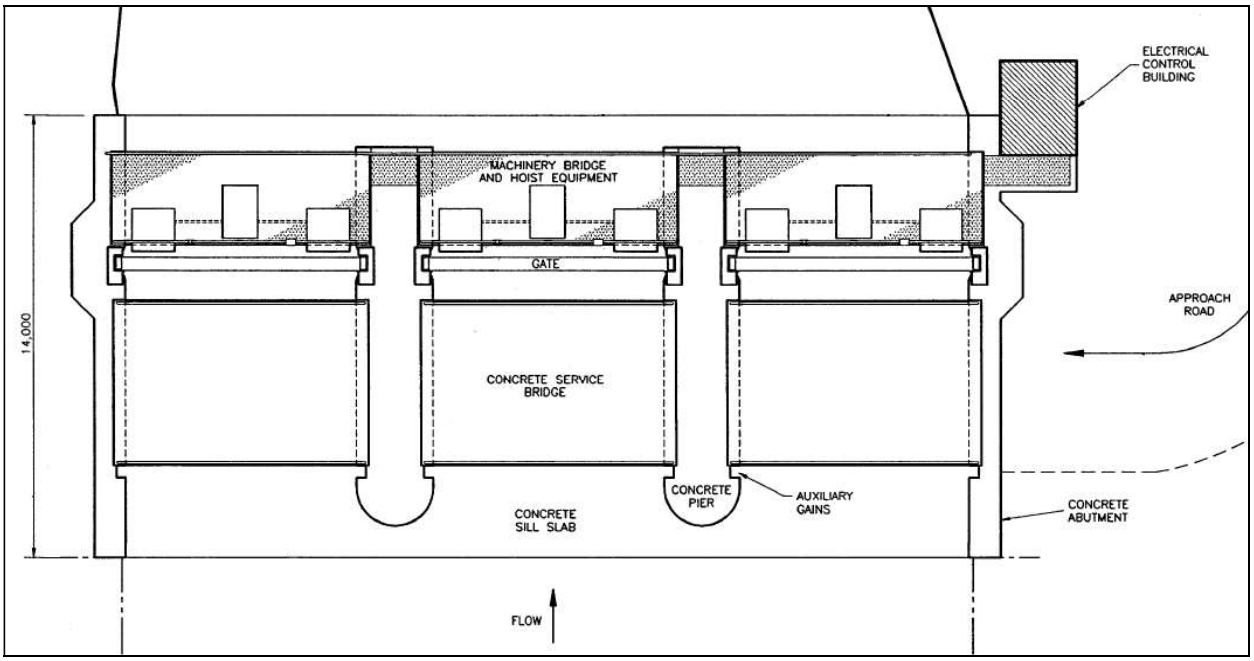

Figure 5 – General arrangement of Portage Dam, top view. Gate #1 at right.

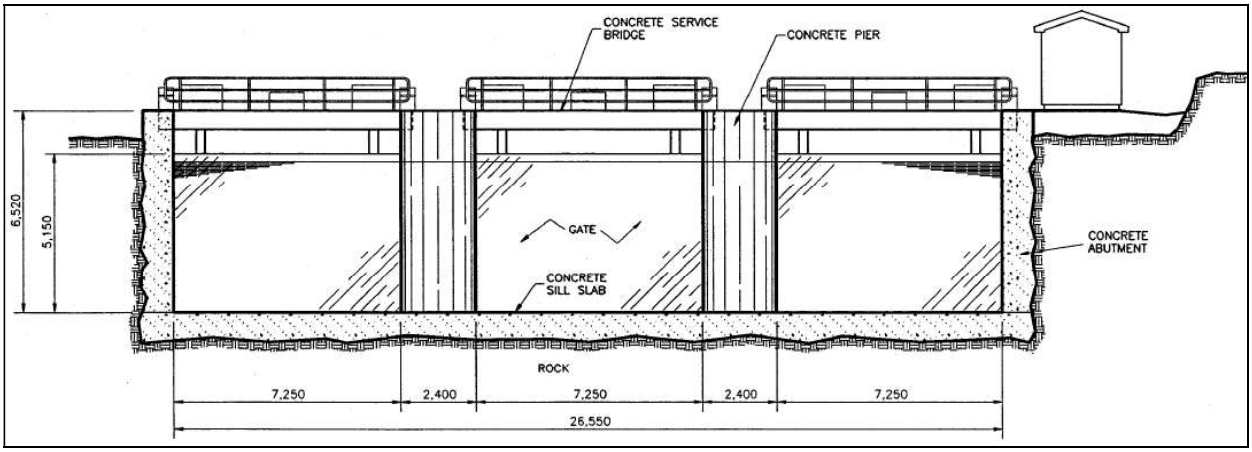

Figure 6 - General arrangement of Portage Dam, view looking downstream. Gate #1 at right.

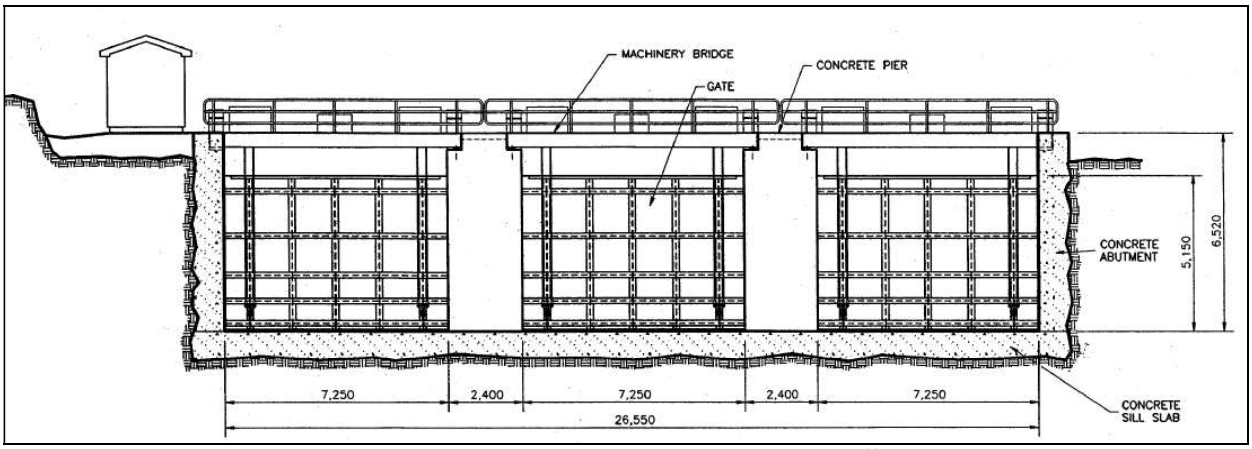

Figure 7 - General arrangement of Portage Dam, view looking upstream. Gate #1 at left.

Figure 8 - Access to Portage Dam is across intake for Okikendawt Generating Station (area with yellow bollards at centre).

Figure 9 - General view of Portage Dam as seen from upstream right bank. Gate #1 in foreground.

Figure 10 - General view of Portage Dam as seen from the upstream left bank, looking back towards the Okikendawt Generating Station in the background.

Figure 11 - General view of dam deck looking from Gate #3 towards Gate #1 in background. It is the gate closest to the electrical building at the end of the deck.

Figure 12 - Gate #1. Circle identifies location of dogging slot in gain.

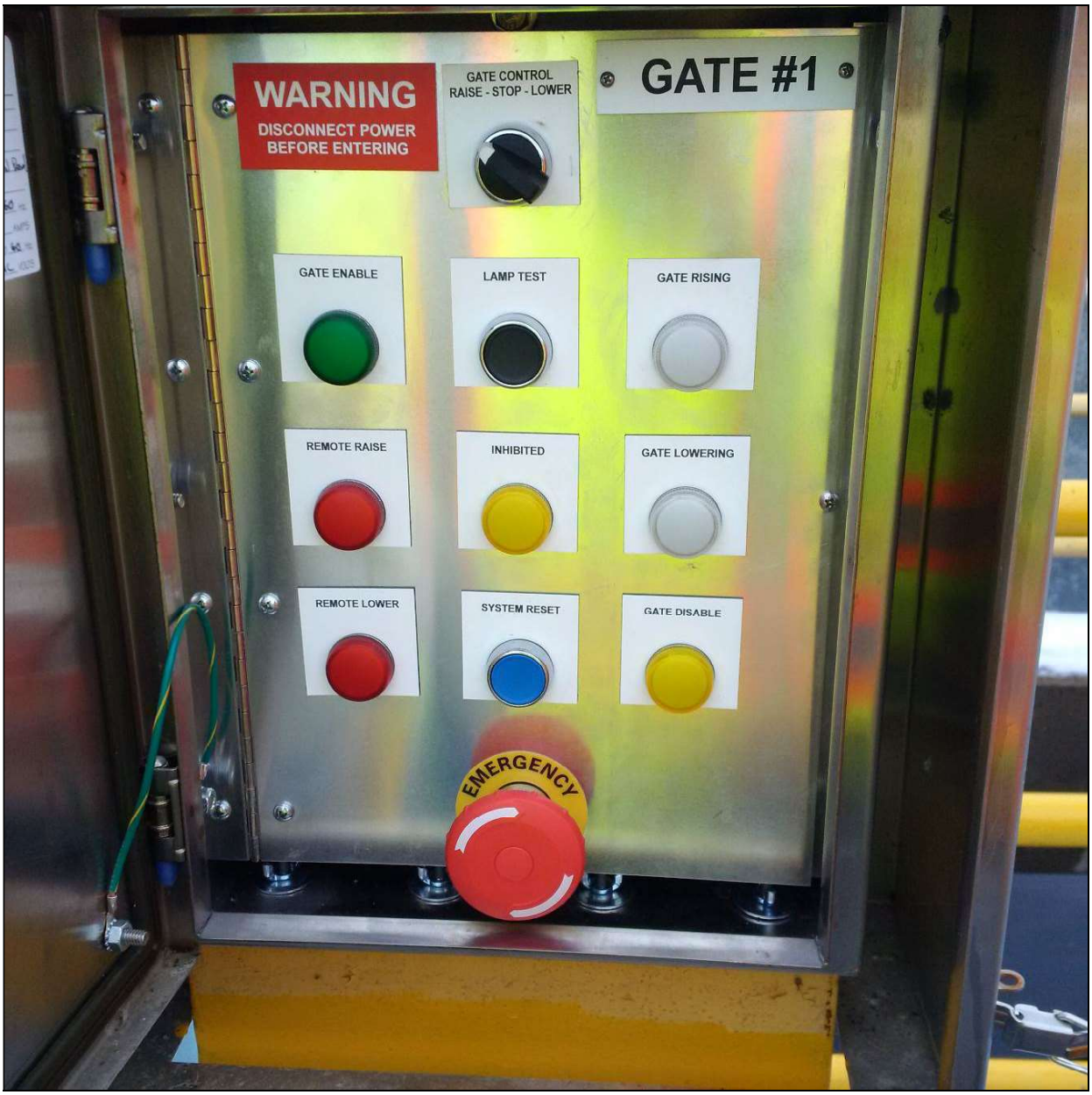

Figure 13 - Local control panel for Gate #1. This is actually the "main" panel used by the Damkeepers.

Figure 14 - Control panels inside electrical building for the three gates. The panel for gate #1 is shown as locked out in this photo (it is not currently locked-out).

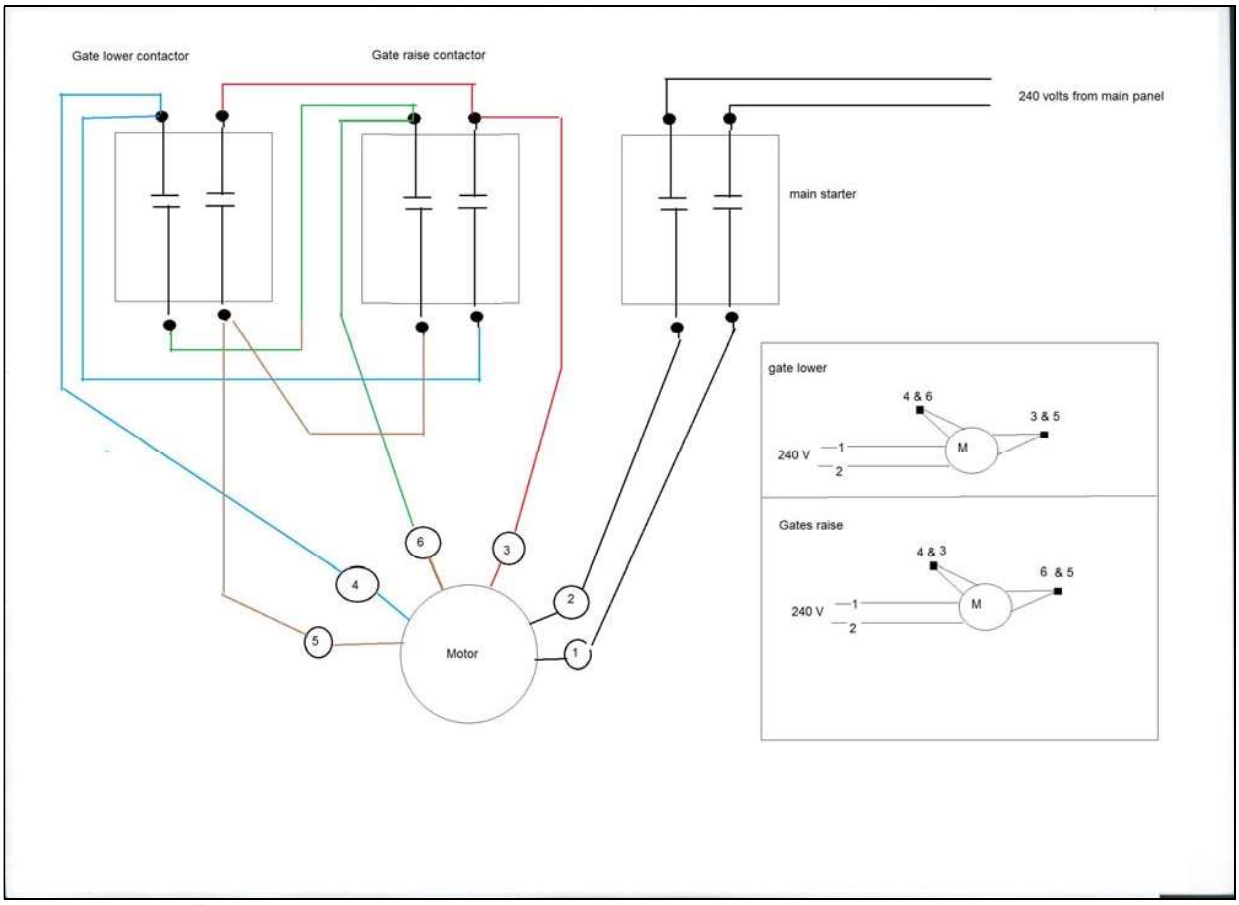

Figure 15 - Gate #1: wiring diagram for starter and raise & lower contactors. No similar diagrams exist for other two motors.

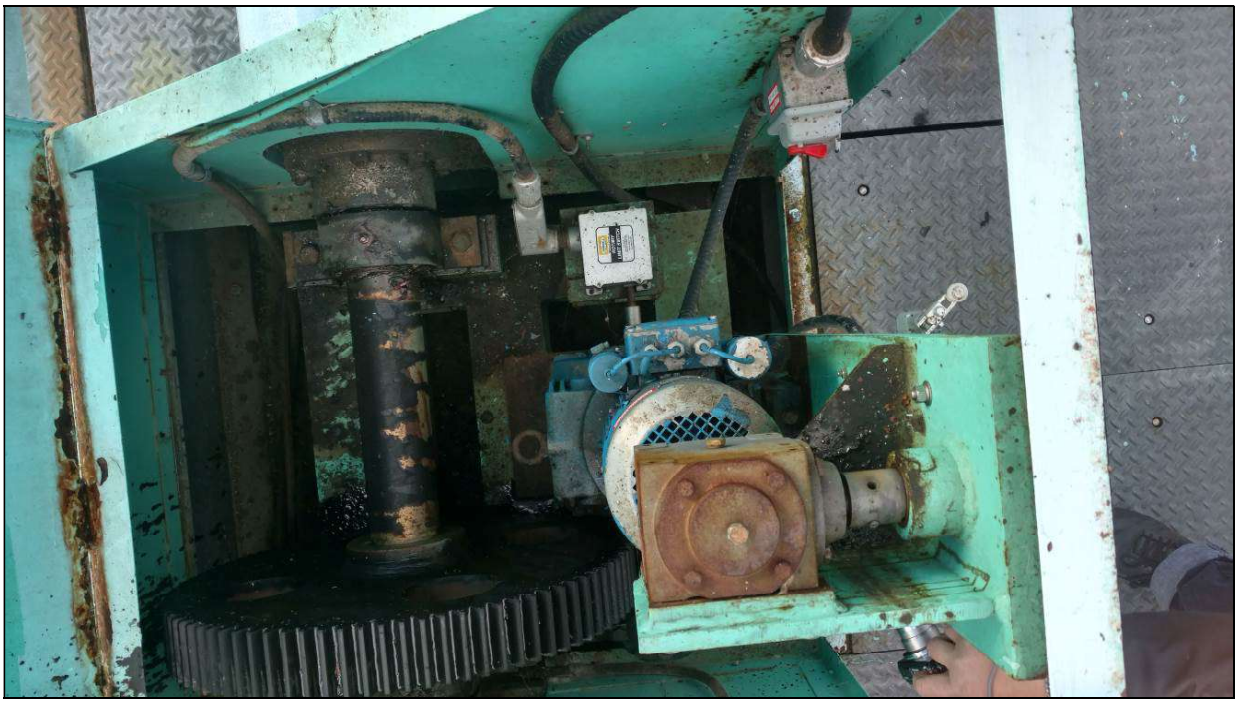

Figure 16 - Top view of hoist enclosure. Motor #2 shown here but Motor #1 arrangement is similar. Note red motor lockout switch at top of photo and rotary encoder near motor.

Figure 17 - Top view of installed motor between bevel gearbox on top and the worm gearboxe below. Rotary encoder visible at left of worm gearbox.


Dayton

Figure 18 - Capacitors and terminal box. (Motor #2 shown here, but Motor #1 is similar).

Figure 19 - Motor #1 and its bevel gearbox removed and plastic protective sheet over worm gearbox (work of 2017).

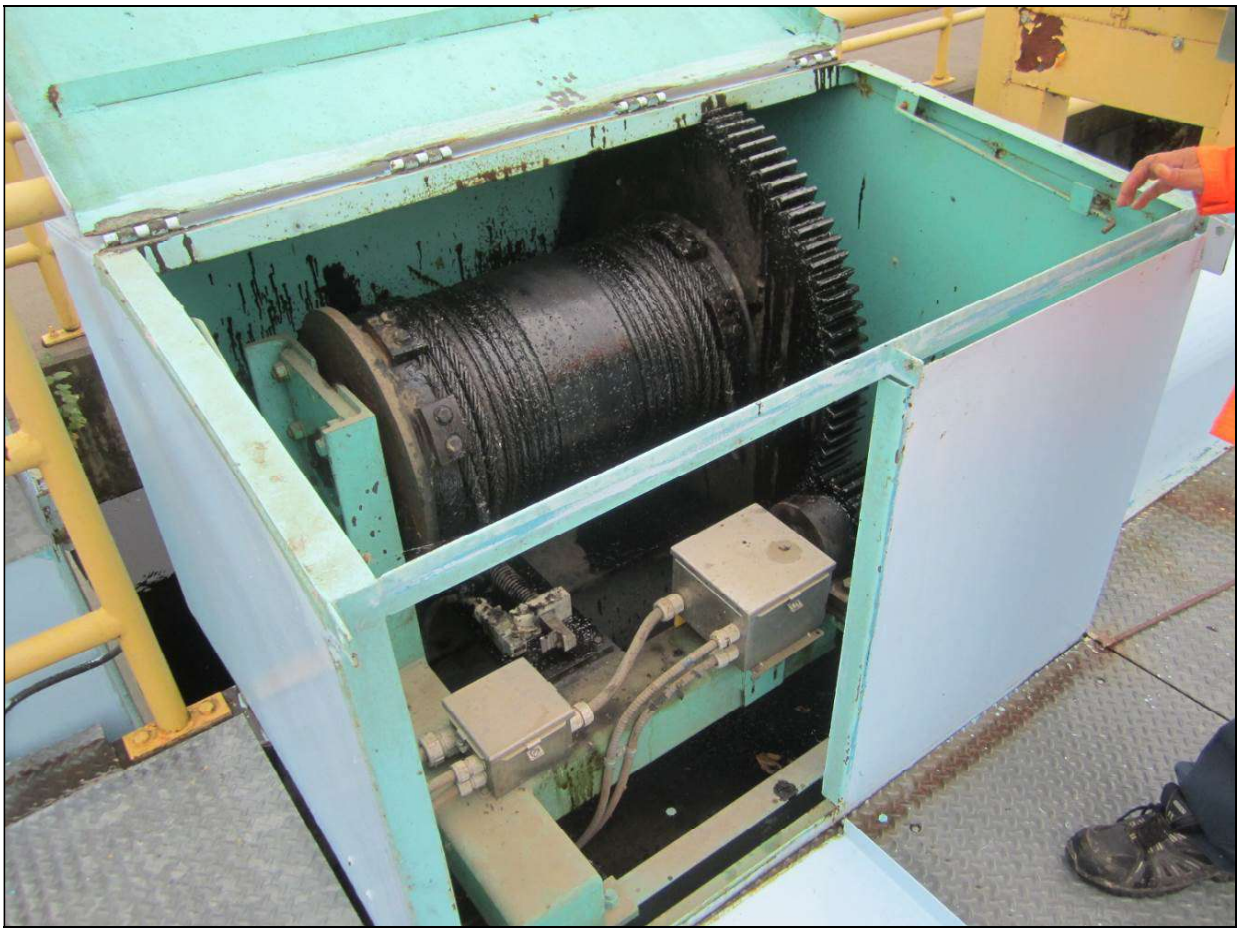

Figure 20 - Wire rope drum. Each hoist has two of these. Slack rope limit switch visible below and at left of drum.

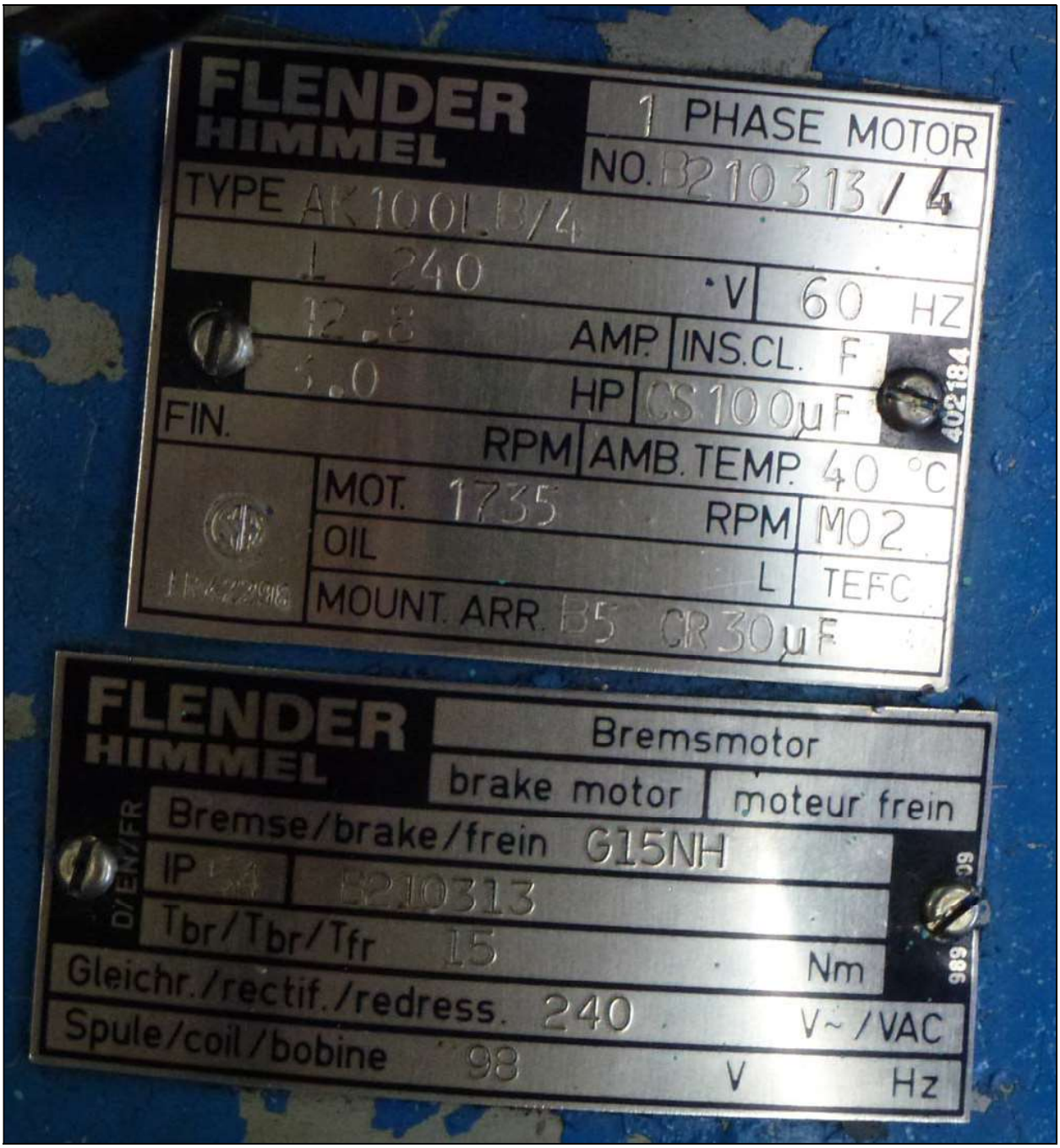

Figure 21 - Motor #1 and brake nameplates.

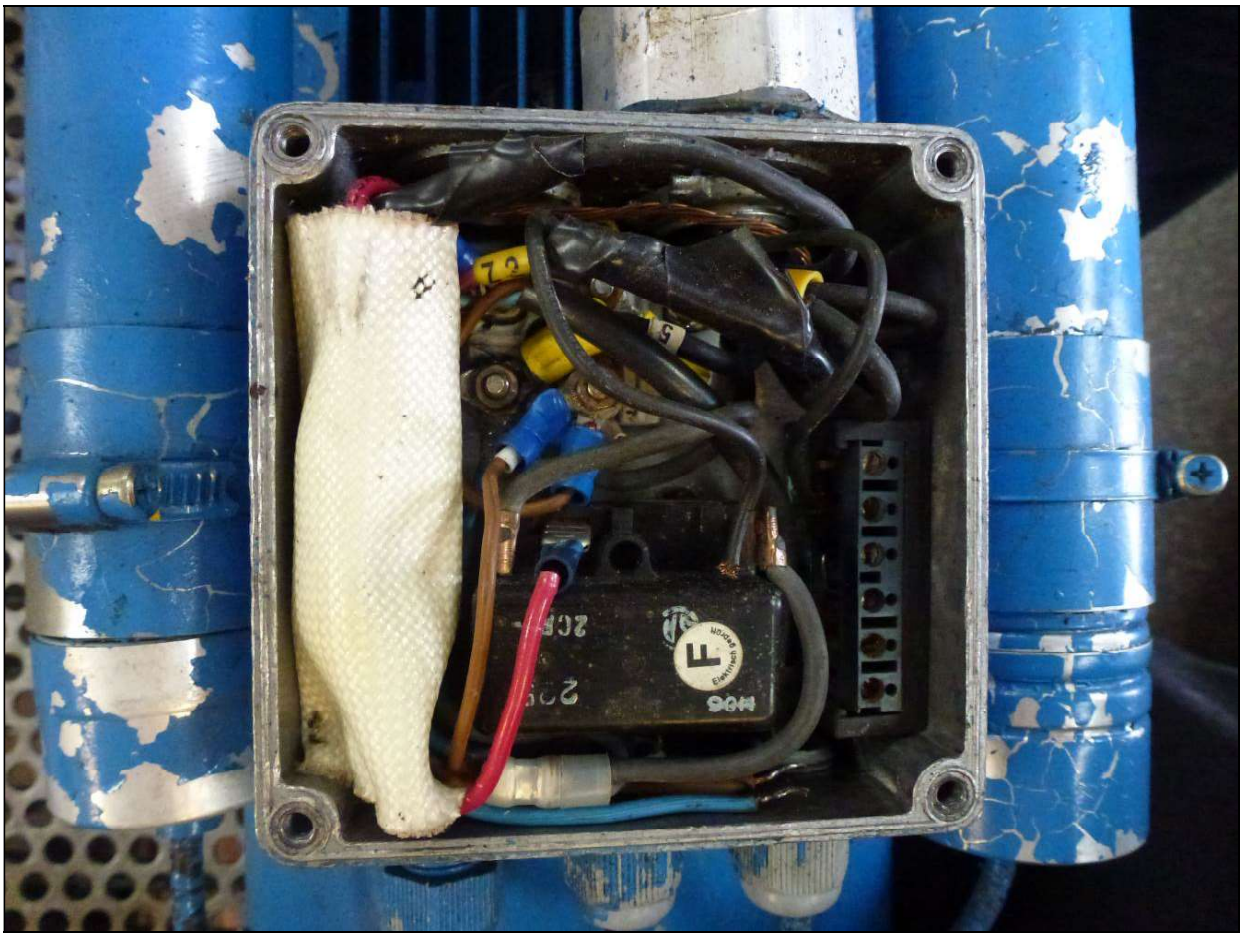

Figure 22 – Wiring inside Motor #1's terminal box.

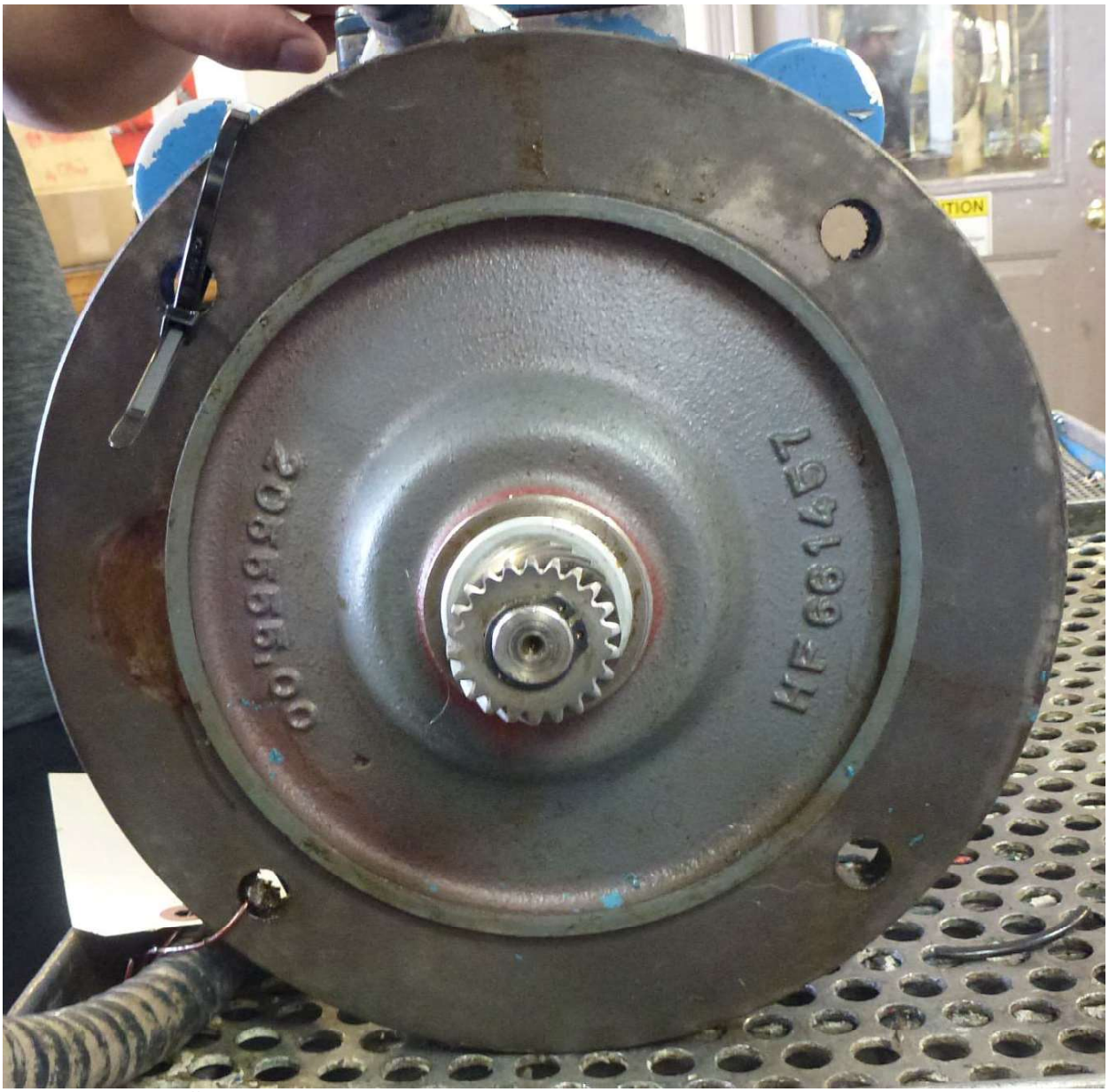

Figure 23 – Motor #1's faceplate with gear that drives worm gearbox.

Figure 24 – Detail

Figure 25 - Hub City bevel gearbox supported by housing on top of motor.

Figure 26 - Lovejoy flexible coupling between Hub City bevel gearbox and motor.

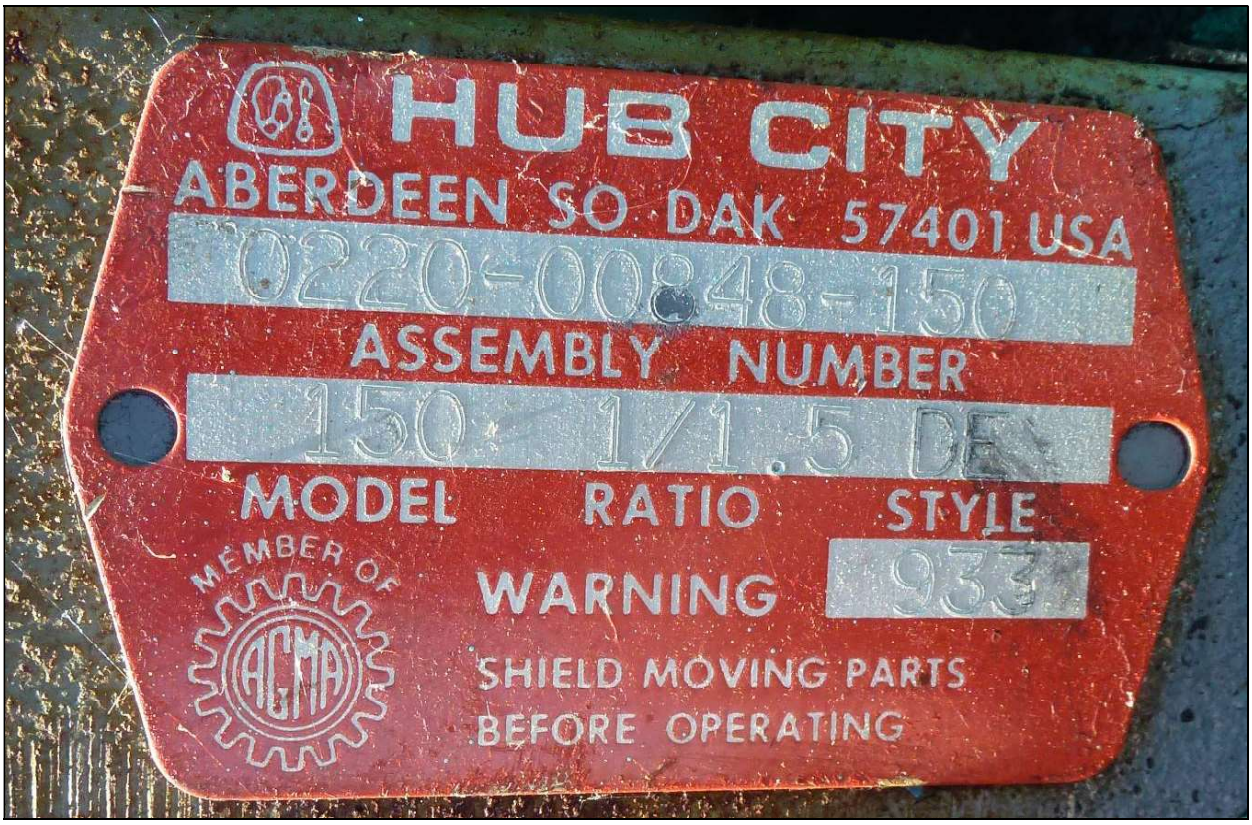

Figure 27 - Nameplate for Hub City bevel gearbox

Figure 28 - Gate #1 operation through Hub City bevel gearbox with drill and custom support shoe.

8 SINGLE LINE DIAGRAM

See next page

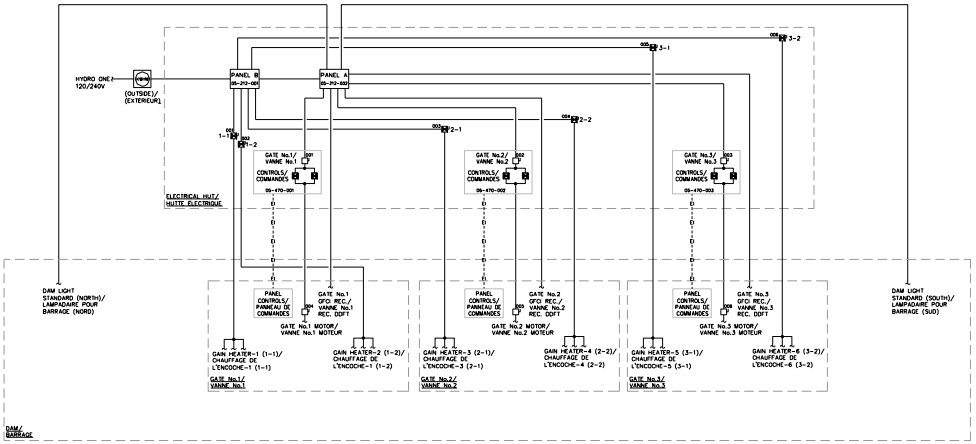

LEGEND/ LÉGENDE

	CONTACTOR/ CONTACTEUR
	DISCONNECT/ SECTIONNEUR
	KILOWATT-HOUR METER/ COMPTEUR DE KILOWATTHEURE
	ELECTRICAL PANEL/ PANNEAU ÉLECTRIQUE
	STARTER/ DÉMARREUR
	ELECTRICAL INTERLOCK/ INTERVERROUILLAGE ÉLECTRIQUE
	NORMAL POWER/ ALIMENTATION NORMALE

Public Works and Government Services Canada / Travaux publics et services gouvernementaux Canada

Canada

National Capital Region
Real Property Branch
Operational Support Services
Maintenance and Operational Assurance

Région de la capitale nationale
Direction générale des biens immobiliers
Service de soutien aux opérations
Entretien et assurance opérationnelle

Property of / Propriété de

Electrical Support Unit
For a copy of this drawing, or to report errors or changes to the distribution, please advise.
louis.brassard@pwgsc-tpsgc.gc.ca

Unité de soutien électrique
Pour obtenir une copie du présent dessin ou pour signaler une erreur ou une modification à la diffusion, s.v.p. aviser
louis.brassard@pwgsc-tpsgc.gc.ca

REVISION/ RÉVISION

Revision	Description	Revised / Révisé
0	ORIGINAL	P. HUTCHISON
Date: SEPT. 2015		
1	PARTIAL UPDATE/ MISE À JOUR PARTIEL	L. BRASSARD
Date: OCT 2017		
Revision	Description	Revised / Révisé
Date		
Revision	Description	Revised / Révisé
Date		
Revision	Description	Revised / Révisé
Date		
Revision	Description	Revised / Révisé
Date		
Revision	Description	Revised / Révisé
Date		
Revision	Description	Revised / Révisé
Date		

Project / Projet

FRENCH RIVER DAMS/ LES BARRAGES DE LA RIVIÈRE DES FRANÇAIS

PORTAGE DAM/ BARRAGE PORTAGE

Lake Nipissing Ont.

Drawing Title / Titre du dessin

SINGLE LINE DIAGRAM
ELECTRICAL
DISTRIBUTION

SCHÉMA UNIFILAIRE
DISTRIBUTION
ÉLECTRIQUE

Drawn / Dessiné: S. DUBUC

Approved / Approuvé par: L. BRASSARD

Drawing no. / No. du dessin: **E0-520-1**

9 CONTROL SCHEMATIC FROM DAM CONSTRUCTION DRAWINGS

See next page

R_012000.006_514

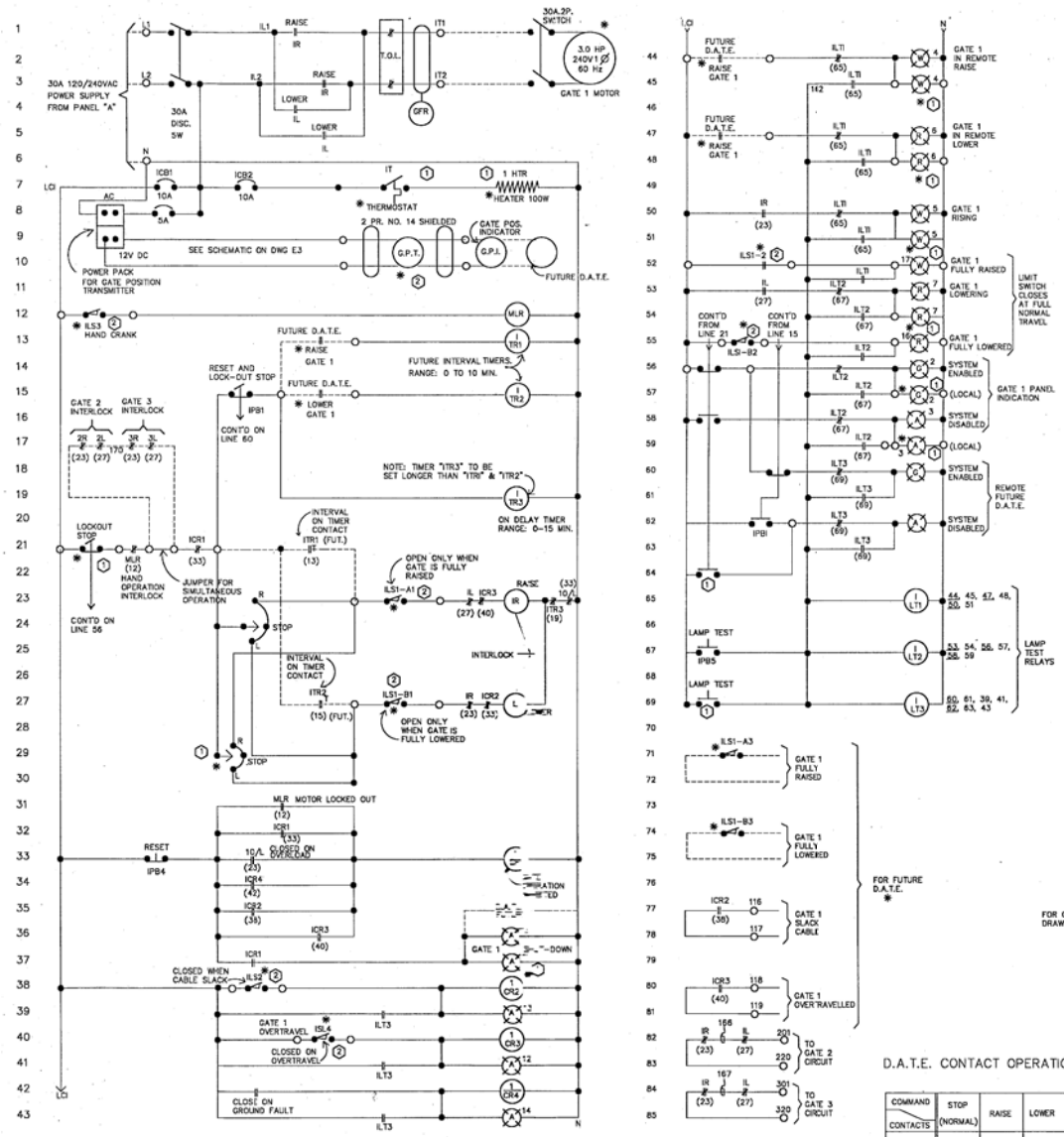

ELECTRICAL CONTROL SCHEMATIC – TYPICAL GATE NO. 1

N.T.S.

REFERENCE	LIMIT SWITCH FUNCTION	NO. OF CONTACTS	#GATE 1	#GATE 2	#GATE 3
LSIA B	STOPS RAISE NORMAL POSITION	3SPST	ILSIA ILSIB	2LSIA 2LSIB	3LSIA 3LSIB
LS2	SLACK ROPE – STOPS LOWER TRAVEL	1SPST	ILS2	2LS2	3LS2
LS3	HAND CRANK – LOCKS OUT MOTOR	1SPST	ILS3	2LS3	3LS3
LS4	OVERTRAVEL – STOPS RAISE TRAVEL	1SPST	ILS4	2LS4	3LS4

LIMIT SWITCH FUNCTIONS

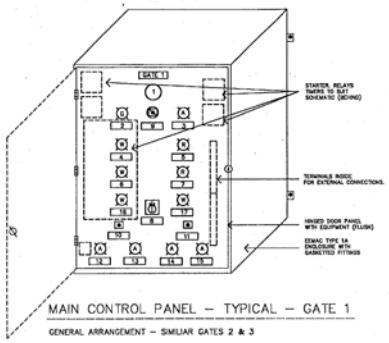

MAIN CONTROL PANEL – TYPICAL – GATE 1

GENERAL ARRANGEMENT – SIMILIAR GATES 2 & 3

NOT TO SCALE

LEGEND:

- (1) GATE POSITION INDICATOR
- PILOT INDICATING LAMP G–GREEN R–RED A–AMBER W–WHITE
- LOCK-OUT STOP PB.
- CONTROL PB.
- NAME PLATE:–
  - 2 GATE CONTROL ENABLE
  - 3 GATE CONTROL DISABLE
  - 4 REMOTE RAISE
  - 5 GATE RISING
  - 6 REMOTE LOWER
  - 7 GATE LOWERING
  - 8 GATE CONTROL SWITCH RAISE – STOP – LOWER
  - 9 EMERGENCY STOP LOCK-OUT / RESET
  - 10 SYSTEM RESET
  - 11 LAMP TEST
  - 12 GATE OVERTRAVEL
  - 13 GATE ROPE SLACK
  - 14 GATE MOTOR GROUND FAULT
  - 15 GATE OPERATION INHIBITED
  - 16 GATE FULLY LOWERED
  - 17 GATE FULLY RAISED

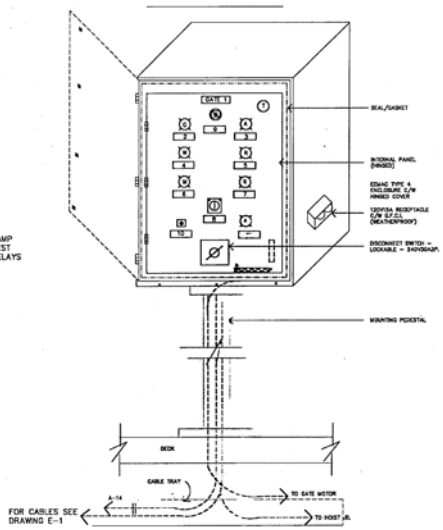

LOCAL CONTROL PANEL – TYPICAL – GATE 1

SIMILAR GATES 2 & 3

NOT TO SCALE

LEGEND:

- PILOT INDICATING LAMP G–GREEN R–RED A–AMBER W–WHITE
- HEATER (SPACE) & THERMOSTAT
- LOCK-OUT STOP PB.
- RAISE .OFF. LOWER SWITCH
- CONTROL PB.
- NAME PLATE:–
  - 2 GATE CONTROL ENABLE
  - 3 GATE CONTROL DISABLE
  - 4 REMOTE RAISE
  - 5 GATE RISING
  - 6 REMOTE LOWER
  - 7 GATE LOWERING
  - 8 GATE CONTROL SWITCH RAISE – STOP – LOWER
  - 9 EMERGENCY STOP LOCK-OUT / RESET
  - 10 LAMP TEST
  - 11 GATE OPERATION INHIBITED

D.A.T.E. CONTACT OPERATION (FUTURE)

COMMAND / CONTACTS	STOP (NORMAL)	RAISE	LOWER
STOP	–#–	–|–	–|–
RAISE	–|–	–#–	–|–
LOWER	–|–	–|–	–#–

NOTES:

1. STOP CONTACT IS COMMON FOR ALL THREE GATES.
2. RAISE AND LOWER CONTACTS ONE FOR EACH GATE.
3. STOP COMMAND FROM CENTRAL (FUTURE) RETURNS THE CONTACTS TO NORMAL POSITION.

LEGEND:

- OPERATING COIL OR RELAY COIL – DEVICE No. SHOWN
- INDICATING LIGHT (120V)
- DEVICE REMOTE TO MAIN CONTROL PANEL.
- TERMINAL FOR REMOTE FIELD WIRING
- INTERVAL TIMER CONTACT
  1–TR3 – CLOSES ON APPLICATION OF INPUT VOLTAGE OPENS AT END OF TIME SELECTED (EVEN IF INPUT VOLTAGE IS PRESENT)
  – CONTACT REMAINS OPEN UNTIL REMOVAL AND REAPPLICATION OF INPUT VOLTAGE
- (1) LOCATED IN LOCAL CONTROL PANEL (AT GATE DECK)
- (2) LOCATED IN GATE/HOIST MECHANISM

Public Works Canada / Travaux publics Canada
Architectural and Engineering Services / Services d'architecture et de génie
Ontario Region / Région de l'Ontario

Revisions	Date

A Detail No. No. du detail
B drawing no. – where detail required dessin no. – au detail exige
C drawing no. – where detailed dessin no. – au detaille

project title / titre du projet
RECONSTRUCTION OF PORTAGE DAM
FRENCH RIVER ONTARIO

drawing title / titre du dessin
ELECTRICAL SCHEMATIC GATE OPERATION

designed by / conçu par	D.J.MOON	1992-04-15
drawn by / dessiné par	R.P.G.	1992-04-15
reviewed by / examiné par		1992-05-28
approved by / approuvé par		92-05-28
project date / date du projet		
project no. / no. du projet	649459	
drawing no. / dessin no.	E2	

10 HOIST SHOPDRAWINGS

See next two pages

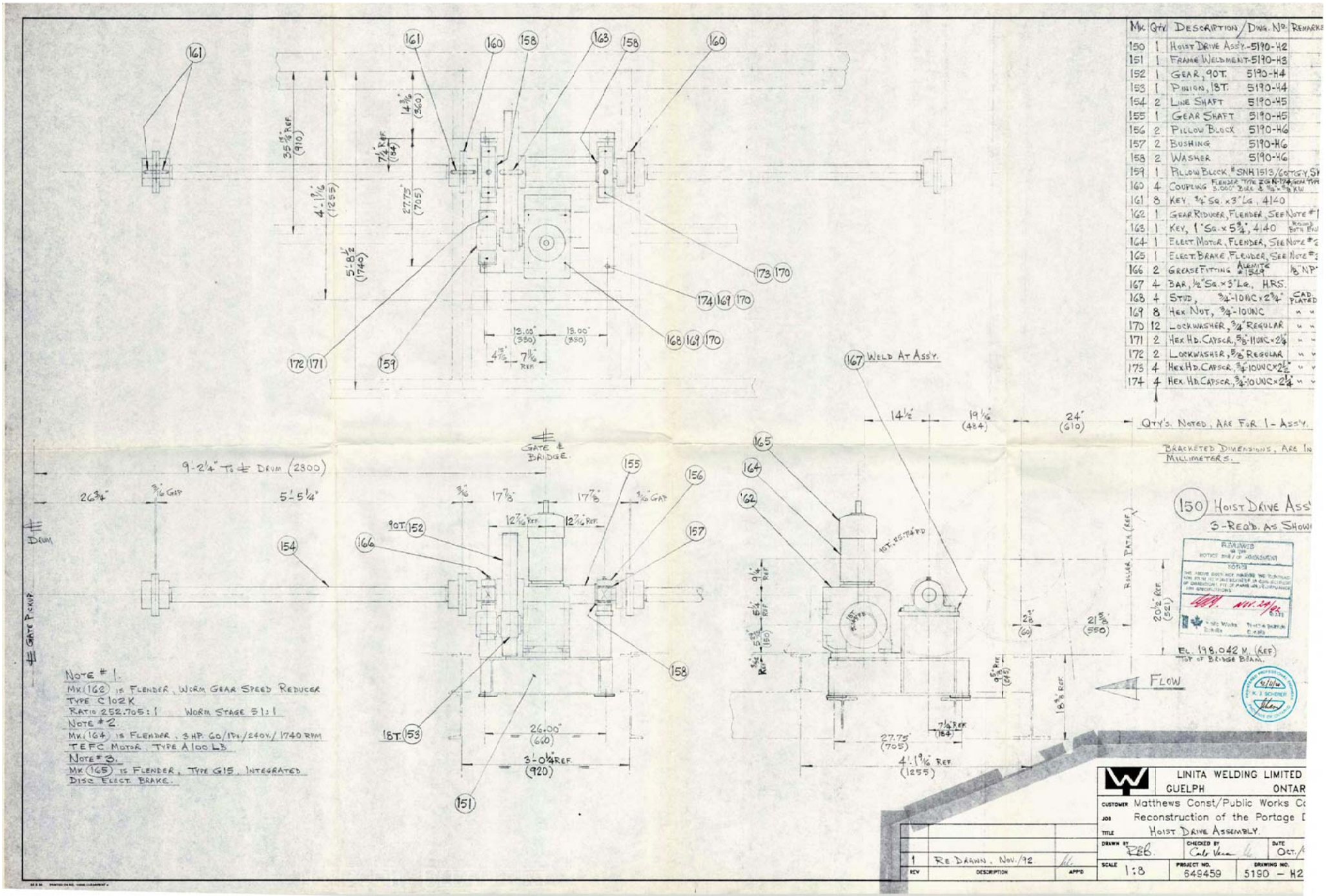

MK.	QTY.	DESCRIPTION / DWG. NO.	REMARKS
150	1	HOIST DRIVE ASS'Y.-5190-H2	
151	1	FRAME WELDMENT-5190-H3	
152	1	GEAR, 90T. 5190-H4	
153	1	PINION, 18T. 5190-H4	
154	2	LINE SHAFT 5190-H5	
155	1	GEAR SHAFT 5190-H5	
156	2	PILLOW BLOCK 5190-H6	
157	2	BUSHING 5190-H6	
158	2	WASHER 5190-H6	
159	1	PILLOW BLOCK #SNH 1513/60 TGY, SN	
160	4	COUPLING FLENDER TYPE ZGN-124 3.000" BORE & 3/4" x 3/8" KW	NORM TYPE
161	8	KEY, 3/4" SQ. x 3" LG., 4140	
162	1	GEAR REDUCER, FLENDER, SEE NOTE #1	
163	1	KEY, 1" SQ. x 5 3/4", 4140	ROUND ENDS
164	1	ELECT. MOTOR, FLENDER, SEE NOTE #2	
165	1	ELECT. BRAKE, FLENDER, SEE NOTE #3	
166	2	GREASE FITTING ALEMITE #1549	1/8" NPT
167	4	BAR, 1/2" SQ. x 3" LG., HRS.	
168	4	STUD, 3/4"-10NC x 2 3/4"	CAD. PLATED
169	8	HEX NUT, 3/4"-10UNC	" "
170	12	LOCKWASHER, 3/4" REGULAR	" "
171	2	HEX HD. CAPSCR, 5/8"-11UNC x 2 1/4"	" "
172	2	LOCKWASHER, 5/8" REGULAR	" "
173	4	HEX HD. CAPSCR, 3/4"-10UNC x 2 1/2"	" "
174	4	HEX HD. CAPSCR, 3/4"-10UNC x 2 1/4"	" "

QTY'S. NOTED, ARE FOR 1-ASS'Y.

BRACKETED DIMENSIONS, ARE IN MILLIMETERS.

(150) HOIST DRIVE ASS'Y
3-REQ'D. AS SHOWN

REVIEWED
UNDER THE
MOTION PICT. ACT ARRANGEMENT
1978-79
THE ABOVE DOES NOT PERMIT THE PURCHASE OF GOODS NOT CONSIDERED IN CONSTRUCTION OF DIMENSIONS, FIT OF PARTS OR COMPLIANCE WITH SPECIFICATIONS
Nov. 24/92
DATE
Public Works Canada
Travaux publics Canada

NOTE #1.
MK (162) IS FLENDER, WORM GEAR SPEED REDUCER TYPE C102K
RATIO 252.705:1 WORM STAGE 51:1
NOTE #2.
MK (164) IS FLENDER, 3 HP. 60/1Ph./240V./1740 RPM TEFC MOTOR, TYPE A100 L3
NOTE #3.
MK (165) IS FLENDER, TYPE G15, INTEGRATED DISC ELECT. BRAKE.

4/10/92
K. J. SCHEER
PROFESSIONAL ENGINEER
PROVINCE OF ONTARIO

REV	DESCRIPTION	APP'D
1	RE DRAWN, NOV./92	

LINITA WELDING LIMITED
GUELPH ONTAR

CUSTOMER: Matthews Const/Public Works Ca
JOB: Reconstruction of the Portage D
TITLE: HOIST DRIVE ASSEMBLY.

DRAWN BY	CHECKED BY	DATE
RBB.	Cale Vera	OCT./

SCALE	PROJECT NO.	DRAWING NO.
1:8	549459	5190 – H2

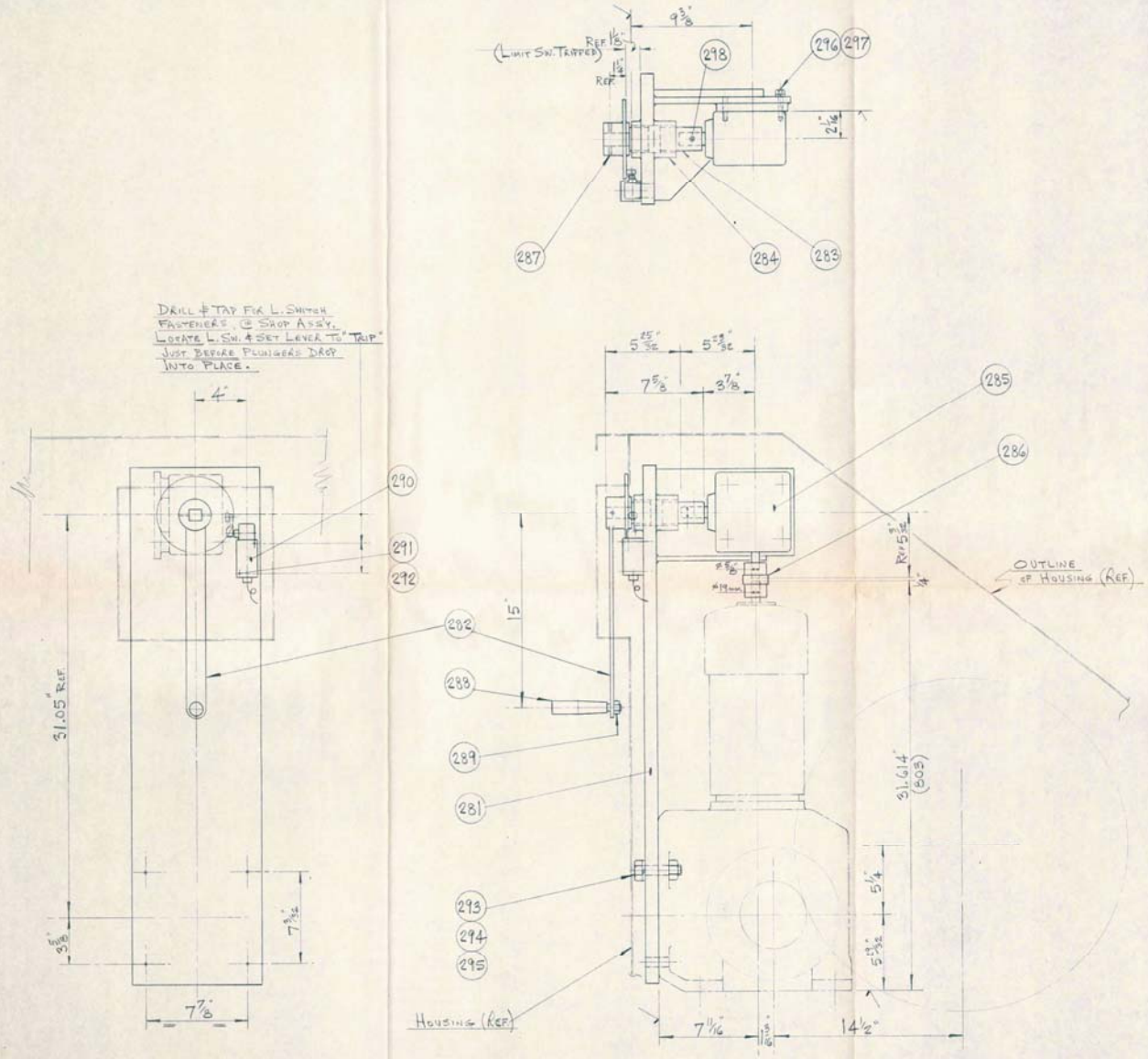

MK.	QTY.	DESCRIPTION / DWG. NO.	REMARKS
280	1	HANDCRANK ASS'Y-5190-H18	
281	1	FRAME 5190-H19	
282	1	CRANK 5190-H19	
283	1	SHAFT 5190-H19	
284	2	BUSHING 1 3/4" I.D. × 2" O.D. × 1/4" LG.	OILITE BRONZE.
285	1	BEVEL GEAR DRIVE INCREASER RATIO 1:1.5 MODEL 150, STYLE E	HUB-CITY.
286	1	FLEX. COUPLING DAVID BROWN NORDEN SIZE #1 W/S/S. BORE #5/8 & #19mm	
287	2	BALL PLUNGER, #11109-SS, JERGENS, 1/4"-20NC	
288	1	HANDLE (REVOLVING) REID # B1-55	
289	1	HEX. NUT, 1/2"-13NC	
290	1	LIMIT SWITCH, S/W. ALLEN BRADLEY #802T-AP LEVER & 3/4" ø ROLLER.	
291	2	SOC. HD. CAPSCR. #10-24NC × 1 1/4"	
292	2	LOCKWASHER #10-HC.	
293	4	HEX. HD. BOLT, 3/4"-10NC × 3"	GR. 5 PLATED.
294	4	LOCKWASHER, 3/4" REGULAR	CAD PLATED
295	4	HEX. NUT, 3/4"-10NC	" "
296	4	HEX. HD. CAPSCR. 3/8"-16NC × 1 1/2"	" "
297	4	LOCKWASHER, 3/8" REGULAR	" "
298	2	SOC. SETSCR. 5/16"-18NC × 3/8"	

QUANTITIES ARE FOR 1-ASSEMBLY.

BRACKETED DIMENSIONS ( ) ARE IN MILLIMETERS.

280 HANDCRANK ASSEMBLY.

3-REQUIRED, AS SHOWN.

REVIEWED AS PER NOTICE AND / OR AMENDMENT

NOTICE

THIS ABOVE DOES NOT RELEASE THE CONTRACTOR FROM HIS OBLIGATIONS FOR CORRECTNESS OF DIMENSIONS, FIT UP PARTS AND COMPLIANCE WITH SPECIFICATIONS.

Sept 27/93 DATE

Public Works Canada — Travaux publics Canada

MATTHEWS CONTRACTING INC.

REVIEWED - NO COMMENT ☑
REVIEWED - COMMENTS AS NOTED ☐
REVIEWED - REVISE AND RESUBMIT ☐
DATE REC'D 930115

This review is for conformance only with the general design intent, contract documents and overall dimensions and in no way alleviates the subcontractor or supplier from confirming site conditions as necessary prior to fabrication.

REVIEWED BY Carl
DATE RETURNED 930115

REV	DESCRIPTION	APPD
1	SHAFT BRG. LENGTH INCREASED	22 JUL 92

LINITA WELDING LIMITED
GUELPH ONTARIO

CUSTOMER: Matthews Const/Public Works Can.
JOB: Reconstruction of the Portage Dam
TITLE: HANDCRANK ASSEMBLY

DRAWN BY	CHECKED BY	DATE
R.E.B.	Carl Vu	8 DEC. 1992

SCALE	PROJECT NO.	DRAWING NO.
1:4	649459	5190 H18

11 FLENDER HIMMEL MOTOR MANUAL

See next 6 pages

FLENDER

FLENDER POWER TRANSMISSION INC.
1151 Gorham Street • Unit 14
Newmarket, Ontario L3Y 7V1 • Phone (416) 836-1771
Fax (416) 836-1724

ELECTRIC MOTOR SPECIFICATION

Type EL A100 LB 4 D(G) 15

- single phase brake motor

P_n = 3 kW

n_n = 1,740 rpm

Voltage = 240 V, 60 Hz

Amperage = 12.8 Amps

F-Insulation, IP 54, Mounting position B3-01

Starting Capacitor = 100 μF 340V

Operating Capacitor = 30 μF 440V

MOTOX®

FLENDER HIMMEL

Maßblatt
Dimension
Sheet
Cotes

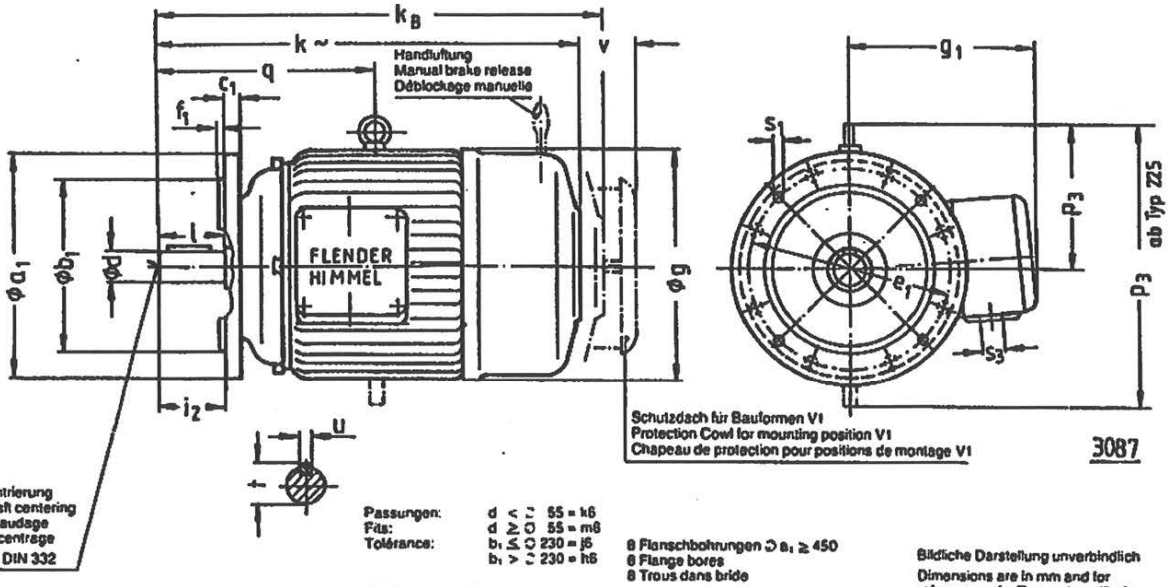

Ringschraube am Motor ab Baugröße 132
Motor with eyebolt from size 132
Moteur avec anneau de levage à partir de taille 132

Passungen: d < ⊃ 55 = k6
Fits: d ≥ ⊃ 55 = m6
Tolérance: b_1 ≤ ⊃ 230 = j6
b_1 > ⊃ 230 = h6

Paßfedern nach DIN 6885
Parallel key DIN 6885
Clavette DIN 6885

8 Flanschbohrungen ⊃ a_1 ≥ 450
8 Flange bores
8 Trous dans bride

4 Flanschbohrungen ⊃ a_1 < 450
4 Flange bores
4 Trous dans bride

Bildliche Darstellung unverbindlich
Dimensions are in mm and for reference only. Request certified dimension sheet for construction purposes
Les illustrations sont sans engagement

Typ(e)	Polzahl / No. of poles / Nb. de pôles	a_1	b_1	c_1	e_1	f_1	i_2	s_1	g	g_1	k	k_B	p_3	q	s_3	d	l	t	u	DR M	v
M1 B/C	2–8	160	110	10,5	130	3,5	30	9	138	114	227	264*	–	112,5	2×Pg 13,5	14	30	16	5	5	25
M1 P	2–8	160	110	10,5	130	3,5	30	9	138	114	245	282*	–	112,5	2×Pg 13,5	14	30	16	5	5	25
G 80.	2–8	200	130	10	165	3,5	40	11,5	160	123	267	346	–	140	2×Pg 13,5	19	40	21,5	6	6	26
A 90 S	2–8	200	130	10	165	3,5	50	11,5	176	139	294	376	–	156	2×Pg 16	24	50	27	8	8	26
A 90 L	2–8	200	130	10	165	3,5	50	11,5	176	139	319	401	–	168,5	2×Pg 16	24	50	27	8	8	26
A 100.	2–8	250	180	11	215	4	60	14	196	154	363	448	–	193	2×Pg 21	28	60	31	8	10	31
A 112 M	2–8	250	180	11	215	4	60	14	220	170	380	473	–	200	2×Pg 21	28	60	31	8	10	32
G 132 S	2–8	300	230	12	265	4	80	14	261	200	442	548	174	239	2×Pg 21	38	80	41	10	12	37
G 132 M	2–8	300	230	12	265	4	80	14	261	200	480	586	174	258	2×Pg 21	38	80	41	10	12	37
G 160 M	2–8	350	250	13	300	5	110	18	317	226	583	703	210	323	2×Pg 29	42	110	45	12	16	39
G 160 L	2–8	350	250	13	300	5	110	18	317	226	627	747	210	345	2×Pg 29	42	110	45	12	16	39
G 180 M	2–8	350	250	15	300	5	110	18	360	270	650	769	233	351,5	2×Pg 29	48	110	51,5	14	20	61
G 180 L	2–8	350	250	15	300	5	110	18	360	270	688	827	233	370,5	2×Pg 29	48	110	51,5	14	20	61
G 200 L	2–8	400	300	15	350	5	110	18	360	292	738	877	233	395,5	2×Pg 36	55	110	59	16	20	61
G 225 S	2	450	350	16	400	5	110	18	460	370	775	*)	480	402	2×Pg 36	55	110	59	16	20	41
	4–8						140				805			432		60	140	64	18		
G 225 M	2	450	350	16	400	5	110	18	460	370	800	*)	480	414,5	2×Pg 36	55	110	59	16	20	
	4–8						140				830			444,5		60	140	64	18		
G 250 M	2	550	450	18	500	5	140	18	460	370	864	*)	480	482,5	2×Pg 42	60	140	64	18	20	
	4–8															65	140	69	18		
G 280 S	2	550	450	18	500	5	140	18	514	403	985	*)	530	514	2×Pg 42	65	140	69	18	20	48
	4–8															75	140	79,5	20		
G 280 M	2	550	450	18	500	5	140	18	562	424	1046	*)	580	539,5	2×Pg 42	65	140	69	18	20	72
	4–8															75	140	79,5	20		
G 315 S	2	660	550	22	600	6	140	22	562	424	1065	*)	580	559	2×Pg 48	65	140	69	18	20	
	4–8						170				1095			589		80	170	85	22		
G 315 M	2	660	550	22	600	6	140	22	624	513	1146	*)	640	584,5	2×Pg 48	65	140	69	18	20	75
	4–8						170				1176			614,5		80	170	85	22		

Maß k_B bei Bremsmotoren. Bei Ausführung mit schwerem Lüfter auf Anfrage.
Dimension k_B for brake motors. Design with high-inertia-fan on request.
Cote k_B pour moteurs-frein. Moteur avec ventilateur alourdi sur demande.

*) Maß k_B verlängert sich bei Motor M1. mit Bremse D (G) 7,5 um 28 mm
Dimension k_B elongates for 28 mm in case of motor M1. with brake D (G) 7,5
La cote k_B est rallongée dans le cas du moteur M1. avec frein D (G) 7,5 de 28 mm

Ersatzteilliste | List of spare parts | Liste de pièces de rechange

MOTOX®

Getriebe - Anbaumotor mit Bremse
Gear - mounted motor with brake
Moteur - frein pour adaptation au réducteur

FLENDER HIMMEL

Listennr. / No. of list / No. du liste: EL -A100LB 4-D(G) 15

D Seite 1
EN Page 1
FR Page 1

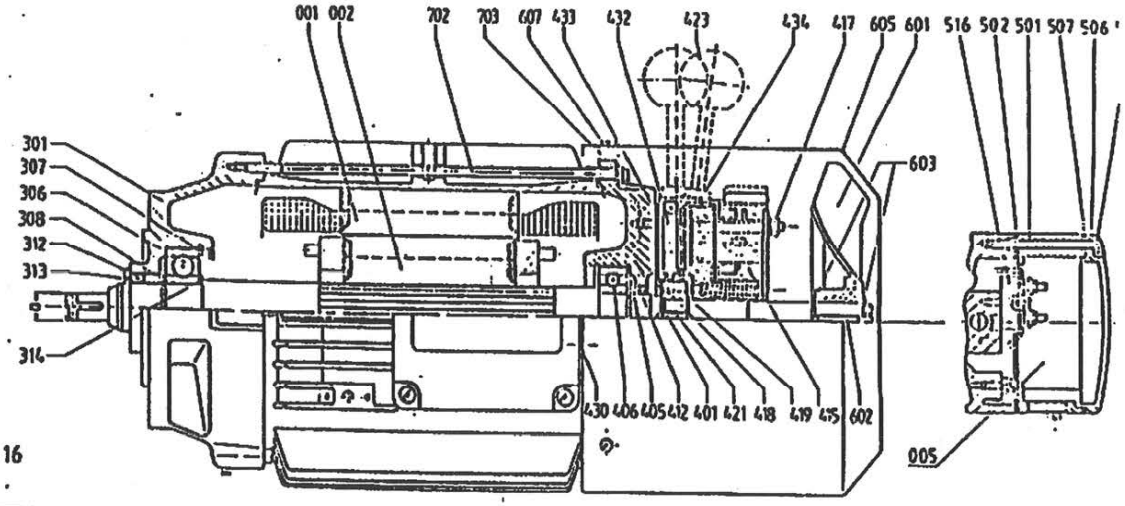

Pos. Item Pos.	Benennung	Designation	Nomenclature	DIN-Bezeichnung / DIN-Code / DIN-Codification	Sach-Nr / Part-No. / No. Pièce	Stck / No. / Pc.	Pre / Pric / Prix
434	Ring	ring	anneau				
433	Reibblech	stainl.-steel-disc	disque inox	f. D 35	805 904	1	
432	Reibscheibe	rotor	rotor	f. D 35	805 700	1	
430	Tülle	rubber bushing	passe-fil en caoutchouc	f. D 35	805 668	1	
426	Schraube	screw	vis	8x11x4 SES	401 790	1	
425	Schraubensicher.	lock washer	rondelle dentée				
424	Wellendichtring	oil seal	bague à lèvres avec ressort				
423	Handlüftung	manual release	déblocage manuel				
422	Staubschutzring	protectiv dust cov.	soufflet de prot. antipouss.				
421	Paßfeder	key	clavette	8 6x6x12 DIN 6885	634 654	1	
420	Paßscheibe	shim ring	rondelle de calage				
419	Sicherungsring	circlip	circlip	20x1,2 DIN 471	051 275	1	
418	Mitnehmer	hub	moyeu	f. D 35 D 20	746 657	1	
417	Schraube	screw	vis				
417	Befestigungssatz	mounting set	parts de serrage	f. D 35	805 939	1	
416	Schraubensicher.	lock washer	rondelle dentée				
415	Bremse	brake	frein	D 15 220/380 V 3~ 50 Hz	330 604	1	
				D 15 220/380 V 3~ 60 Hz	831 723	1	
				G 15 196 V=	794 339	1	
				G 15 24 V=	805 905	1	
				D 15 290/500 V 3~ 50 Hz	806 340	1	
				D 15 254/440 V 3~ 50 Hz	882 598	1	
412	Wellendichtring	oil seal	bague à lèvres avec ressort	A 30x42x7 DIN 3760 NB	011 536	1	
408	Sicherungsring	circlip	circlip				
407	Sicherungsring	circlip	circlip				
406	Lager	bearing	roulement	6206-2 Z DIN 625	016 223	1	
405	Federscheibe	curved spr. washer	rondelle élastique	61x51x0,4/4 K 3	112 534	1	
401	Lagerschild	end-shield	flasque-palier	A 100 - ZV 35	733 571	1	
326	Schraube	screw	vis				
325	Schraubensicher.	lock washer	rondelle dentée				
324	Seckek. Mutter	hexagon nut	écrou six pans				
314	Stützscheibe	supporting ring	rondelle d'appui	30x42x2 DIN 988	178 713	1	
313	Spritzscheibe	splash ring	rondelle de projection	28x42x3	405 949	1	
312	Wellendichtring	oil seal	bague à lèvres avec ressort	A 30x40x7 DIN 3760 NB	403 440	1	
308	Sicherungsring	circlip	circlip	30x1,5 DIN 471	051 284	1	
307	Sicherungsring	circlip	circlip	72x2,5 DIN 472	051 318	1	
306	Lager	bearing	roulement	6306-Z/C 3 DIN 625	071 098	1	
301	Lagerschild	end-shield	flasque-palier	D 120	661 830	1	
				D 160	661 414	1	
				D 200	661 430	1	
				D 250	661 457	1	
				D 300	661 473	1	
				D 350	661 856	1	
005	Klemmenanord.kpl	terminal-system cpl.	disposition des bornes	KKAB 92, KB 6, 2 PG 21	694 010	1	
002	Läufer	rotor	rotor	A 100LB4/115 - ZV 35	401 021	1	
001	Ständerwicker.	stator, not wound	stator, non bobiné	A 100LB4/120 D 5	847 534	1	

Ersatzteilliste | List of spare parts | Liste de pièces de rechange

MOTOX®

Getriebe - Anbaumotor mit Bremse
Gear - mounted motor with brake
Moteur - frein pour adaptation au réducteur

FLENDER
HIMMEL

Listennr.
No. of list
No. du liste
EL - A100LB4 - D(G)35

D Seite 2
EN Page 2
FR Page 2

ERLÄUTERUNGEN:
LEGEND:
LÉGENDE:

Pos.301 (Seite1) - Zuordnung Getriebetyp zu Flansch-ϕ :
Item 301 (Page1) - Correlation of type of gear and ϕ of flange :
Pos.301 (Page1) - Coordination du type de réducteur et du ϕ de bride :

Getriebetyp / Type of gear / Type de réducteur				ϕ
D-Z 30/31	E 20	C20/40		120
D-Z 40/41	E 40	C60	K60	160
D-Z 60/61	E 60	C80	K80	200
D-Z 80/81	E 80	C101	K100	250
D-Z100/101	E100	C121	K120	300
D-Z120/121	E120		K140	350

Zuordnung Bremse - Gleichrichter (Pos.415 - Pos.540)
Correlation brake - rectifier (Item 415 - Item 540)
Coordination frein - redresseur (Pos.415 - Pos.540)

1.: Berechne X:

$$X = \frac{\text{Bremspulenspannung (Gleichstrom)}}{\text{Netzwechselspannung (1~)}}$$

Calculate X:

$$X = \frac{\text{coil voltage supply DC}}{\text{power supply voltage AC singlephase}}$$

Calculez X:

$$X = \frac{\text{tension de bobine de frein (courant continu)}}{\text{tension alternativ du réseau (1~)}}$$

2.: Verwende: Einweggleichrichter bei X ~ 0,45
Brückengleichrichter bei X ~ 0,9
Use: one way rectifier for X ~ 0,45
bridge rectifier for X ~ 0,9
Utilisez: redresseur demi-onde sur X ~ 0,45
redresseur en pont sur X ~ 0,9

Bei Dreh- oder Einphasenwechselstrombremsen entfällt der Gleichrichter.
For 3phase AC- or singlephase AC- brakes no rectifier is necessary.
Sur les freins triphasés ou à courant alternatif il n'y a pas de redresseur.

Pos / Item / Pos	Benennung	Designation	Nomenclature	DIN-Bezeichnung / DIN-Code / DIN-Codification	Sach-Nr. / Part-No / No. pièce	Stck / No. / Pc	Preis / Price / Prix
714	Ringschraube	eye bolt	anneau de levage				
703	Schraubensicher.	lock washer	rondelle dentée	S 6 N 526.01	051 234	4	
702	Schraube	screw	vis	M 6x214 5.8 A 2 F	192 589	4	
607	Schraube	screw	vis	M 4x8 Z DIN84-5.6A2F	385 913	4	
605	Schutzhaube	fan cover	capot protecteur	A 100 - ZV 35	748 811	1	
603	Sicherungsring	circlip	circlip	20x1,2 DIN 471	051 275	2	
602	Toleranzring	tolerance ring	bague de tolerance				
602	Passfeder	key	clavette	B 6x6x20 DIN 6885	441 805		
601	Ventilator	fan	ventilateur		733 857	1	
540	Gleichrichter	rectifier one way / bridge	redresseur demi-onde / en pont	Einweg	543 802	1	
				Brücke	543 810	1	
523	Klemmleistenhal.	strip term. clamp	porte-borne				
522	Klemmleiste	strip terminal	bornes plates	f. KL 2	596 566	1	
521	Klemmenverbinder	insulated terminal	extrémité sortie isolante	KL 2	166 081	1	
516	Klemmenpl. kpl.	terminal board cpl.	plaque à bornes compl.	M 4x16	519 642	3	
509	Schraube	screw	vis	KB 6xM 4	437 409	1	
508	Schraubensicher.	lock washer	rondelle dentée	M 5x60 DIN 84 A 2 F	389 536	4	
507	Dichtung	gasket	joint	93x94x1,5	106 437	1	
506	Deckel	cover	couvercle	92	396 060	1	
504	Schraube	screw	vis				
503	Schraubensicher.	lock washer	rondelle dentée				
502	Dichtung	gasket	joint	92x92x1,5	106 429	1	
501	Unterteil	frame	chassis	92 2 PG 21	385 204	1	

Ordn.-Nr.9.5100 Sach-Nr.139865	Anschlußschaltbild 1~Motor mit AK,BK,Startrelais,Bremse	A6135 Seite 1 von 1

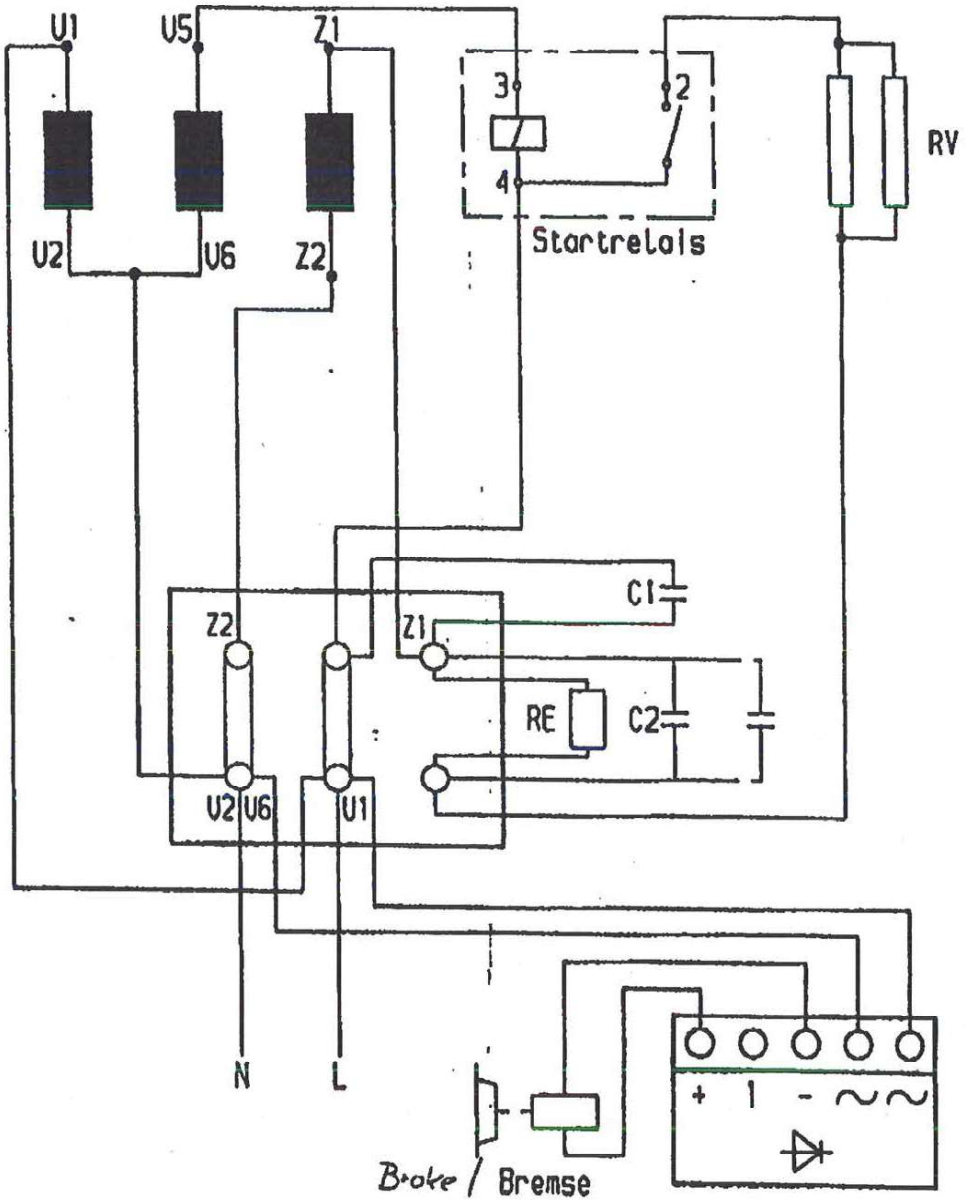

Wiring diagram indicates
cw rotation.
For ccw rotation switch
Z1 and Z2.

RV= Resistor
RE= Resistor
C1= Run capacitor
C2= Starting capacitor

Gez.: 04.12.92 Schweizer	Gepr.: 04.12.92 Ziegler	Ursprung: AH550/A9820	Ersatz für:	ersetzt durch:

Flender Himmelwerk GmbH, Postf. 1709, 7400 Tübingen 3, Tel. 07071/707-1, Fax 07071/707-400

Ix	Änderungsbeschreibung	Datum	Name

$P*****0=100/50

T005/01	BETRIEBSKOND. MUEF/0=30/45
T006/01	STARTRELAIS =2CR4-225
T007/01	WIDERSTAND JA/NEIN=JA
T008/01	BEI KKUT:ANBAUFLAECH=92/110
T009/01	SCHUTZART =IP 65
T010/01	KABELEINFUEHRUNG =2PG21
T011/01	KABELEINFUEHRUNG =3PG9
T012/01	BES.MERKMALE =CSA-AUSF
T013/01	BES.MERKMALE =WID.0,34 OHM
T014/01	AUFBAUZEICHNUNG = 210074
T022/02	KLEMMBRETT BEZEICHNET NACH
T023/02	SCHALTBILD A6135.
T024/02	EA: B210313, FLENDER-KANADA

ZEILE	MENGE	ME	Z-P	SNR	BEZEICHNUNG	SO-NR	DA	HL	LVO
C010	1	1	501	139855	KKUT92/110 2PG21+3PG9 208754	3.1531	F		
C020	1	1	502	108429	FLA-DICHTNG 92X92-1,5GUM202228	3.6810	L	=F	038
C030	4	1	503	051207	FEDERRING B5 DIN127-A2F	4.2352	L	*L	038
C040	4	1	504	050488	ZYL-SCHR M 5X16 DIN84 4.8 A2F	4.2111	L	*L	038
C050	1	1	511	050488	ZYL-SCHR M 5X10 DIN84 4.8 A2F	4.2111	L	*L	038
C060	1	1	512	051207	FEDERRING B5 DIN127-A2F	4.2352	L	*L	038
C071	1	1	513	051181	SCHEIBE 5,3 DIN125 A2F	4.2312	L	*L	038
C080	1	1	516	437409	KLEMPL 6XM4 27X43 DACHKL437409	3.7150	L	=F	038
C090	1	1	517	050507	ZYL-SCHR M 4X12 DIN84 4.8 A2F	4.2111	L	*L	038
C100	6	1	519	519669	6KT-MUTTER M4 DIN934-8 A2F	4.2212	L	*L	038
C110	6	1	520	519650	SCHEIBE 4,3 DIN433-5 E2E	4.2312	L	*L	038
C120	2	1	521	519642	KLEMVERB M4-16 204543	4.4171	L	*L	038
C155	1	1	528	116054	MONTPLAT72X58 STR+KB+KL 116054	3.1551	F		
C160	2	1	529	050394	SENKSCHRAUBE M5X10 DIN963 A2F	4.2131	L	*L	038
C170	2	1	530	050974	VERSCHL-SCHRBE NPG21DIN46320FS	4.2195	L	=F	038
C180	3	1	552	151041	VERSCHR PG 9 04-8 IP65 STP9	4.4162	L	=F	038
C190	1	1	561	116056	AWG14 SW 2,08X80 FLSH+EH201509	2.7361	F		
C200	1	1	562	116057	AWG14 SW 2,08X100FLSH+6 201509	2.7361	F		
C210	1	1	575	634620	MOTSTARTREL 2CR4-225*15,2/12,5	3.7626	L		038
C220	2	1	578	050457	ZYL-SCHR M 3X6 DIN84-4.8 A2F	4.2111	L	*L	038
C230	1	1	585	116055	WIDERST 0,34OHM CSA/UL 210415	2.7431	F		
C240	1	1	590	064169	SWIDSTAND 22 KOHM 1,5 W 750V	3.7431	L	=F	038
C250	1	1		052702	ENDVERBINDER 1,5-6,6 AMP165198	4.4126	L	=F	038
C260	1	1		550418	KOND B100-330HUF 050X175	3.7421	L		038
C270	1	1		566543	KOND B30-430V 45X175 N685.01	3.7421	L		038
C280	1	1		040102	BEF-BUEGEL KOND-050 12-19.013	3.5531	L		038
C290	1	1		040101	BEF-BUEGEL KOND045 12-19.012	3.5531	L		038
C300	2	1		144410	SCHLAUCHSCHELLE032-50DIN3017	3.5538	L	=F	038
C310	4	1		076218	D-BUCHSE 8X11X14 132-19.014	3.6221	L		038
C320	4	1		052954	ZYL-SCHR M 6X25 DIN84 5.6 A2F	4.2111	L	*L	038
C330	4	1		051209	FEDERRING A6 DIN128-A2F	4.2352	L	*L	038

12 HUB CITY BEVEL GEARBOX MANUAL

See next 5 pages

Hub City

BEVEL GEAR DRIVE

PARTS LIST

MODEL 150 STYLE D or E

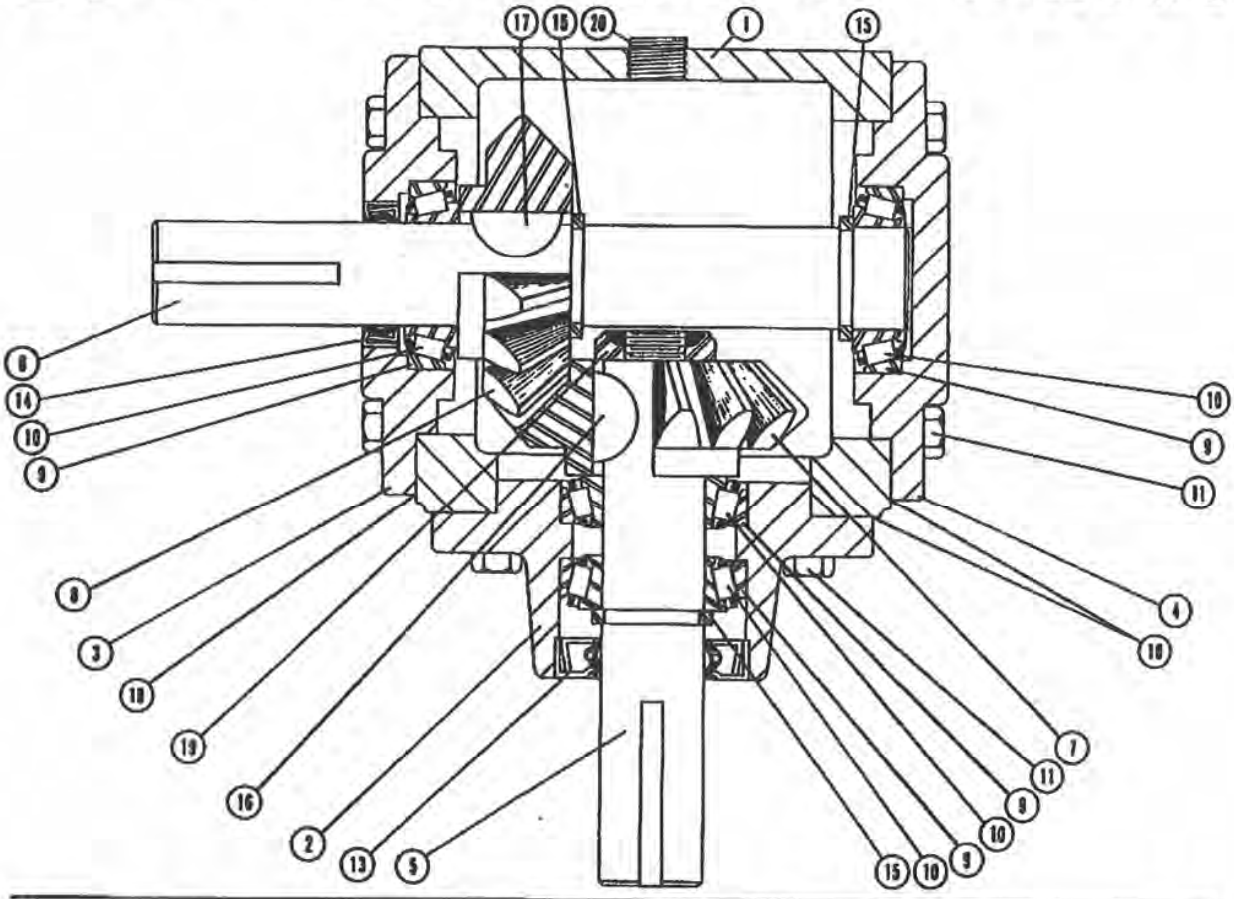

REF. NO.	PART NUMBER	DESCRIPTION	NO. REQ.
1	02-23-00119-150	Housing	1
2	02-23-00121-150	Housing, Pinion	1
3	02-23-00120-150	Cap, Open	1
4	02-23-00125-150	Cap, Closed	1
5	. . . . .	Shaft, Pinion	1
	02-23-00123-150	1:1, 1:1SP Ratios	
	02-23-00133-150	1.5:1, 2:1 Ratios	
6	. . . . .	Shaft, Cross	1
	02-23-00126-150	1:1, 1:1SP Ratios	
	02-23-00138-165	1.5:1, 2:1 Ratios	

CAUTION — Hub City recommends that the complete gear set be replaced to obtain maximum life from the repaired unit. Replacement of only one member will result in an unsatisfactory life.

REF. NO.	PART NUMBER	DESCRIPTION	NO. REQ.
7	. . . . .	Gear, Straight Bevel	1
	02-23-00408-011	1:1 Ratio, 21 Teeth	
	02-23-00162-165	1.5:1 Ratio, 16 Teeth	
	02-23-00132-165	2:1 Ratio, 16 Teeth	
	02-23-00082-011	Gear, Spiral Bevel, L.H., 1:1SP Ratio, 22 Teeth	
8	. . . . .	Gear, Straight Bevel	1
	02-23-00408-011	1:1 Ratio, 21 Teeth	
	02-23-00161-165	1.5:1 Ratio, 24 Teeth	
	02-23-00131-165	2:1 Ratio, 32 Teeth	
	02-23-00081-011	Gear, Spiral Bevel, R.H., 1:1SP Ratio, 22 Teeth	
9	8-32-20-58-002	Cup, Bearing (Timken L44610)	4
10	8-32-20-68-002	Cone, Bearing (Timken L44643)	4
11	8-47-14-04-027	Screw, Hex Cap (3/8 NC x 3/4)	12

REF. NO.	PART NUMBER	DESCRIPTION	NO. REQ.
12	02-23-01260-150	KIT, REPAIR (INCLUDES ITEMS 13-22) THESE ITEMS ARE AVAILABLE IN REPAIR KIT ONLY	
13	8-74-12-13-001	Seal, Pinion Shaft (C/R 10124)	1
14	8-74-21-25-021	Seal, Cross Shaft (C/R 9878)	1
15	8-47-17-86-006	Ring, Retaining	3
16	. . . . .	Key, Pinion Shaft	1
	8-47-17-06-002	Wdff. No. 807 (1/4 x 1/4) 1:1, 1:1SP Ratios	
	8-47-17-05-021	P G W (3/16 sq. x 3/4) 1.5:1, 2:1 Ratios	
17	. . . . .	Key, Cross Shaft	1
	8-47-17-06-002	Wdff. No. 807 (1/4 x 1/4) 1:1, 1:1SP Ratios	
	8-47-17-06-005	Wdff. No. 808 (1/4 x 1) 1.5:1, 2:1 Ratios	
18	02-23-00870-150	Gasket	20
19	. . . . .	Nut, Self Locking	1
	02-23-01030-011	1:1, 1:1SP Ratios	
	8-47-16-14-001	1.5:1, 2:1 Ratios	
20	8-63-12-61-001	Plug, Pipe, Socket (1/4 NPT)	2
21	8-63-12-51-001	Bushing, Pipe (1/4 x 3/8) (not shown)	1
22	8-63-12-71-001	Plug, Vented (1/8 NPT) (not shown)	1

PARTS ORDERING INFORMATION

When ordering replacement or spare parts, check metal tag on the gear case of your unit and furnish ALL of the following information:

GENERAL

1. Assembly Number
2. Model Number
3. Ratio
4. Style
5. Shipping Code

SPECIFIC

6. Part Number
7. Complete Description
8. Quantity Desired
9. Your Name, Address, Zip Code, and Phone Number

PHONE OR WRITE

Your nearest Hub City Sales Office or Industrial Power Transmission Distributor listed in the Yellow Pages, or the Factory Sales Office

NOTE — When more than one part number is listed after a reference number, examine each description carefully to determine which parts fit your need. Parts will be shipped "best way" unless specified.

It is advisable to periodically inspect your Bevel Gear Drive for any signs of impending service. Spare or replacement parts can often be ordered and obtained before disassembly is necessary, thus minimizing machine down-time. The following symptoms can be inspected visually without disassembly and may, in some cases, indicate extensive maintenance procedures.

Oil leaking from pinion housing, caps, cap screws or pipe plugs — might be corrected by retightening or removal and recoating with Loctite® before tightening. If this does not correct the leaking condition, disassembly will be necessary to replace gaskets.

High internal operating temperature (above 200° F.) — could indicate that unit was being overloaded and should be replaced entirely with a larger capacity unit. Damaged bearings or inadequate oil level can also cause heat build-up.

Oil leaking from seals — indicates that shaft and/or seals are worn and need replacing. Keep dirt and foreign particles off shafts in the area of the seals to minimize wear. Note: On initial run of new unit or after a new replacement of seals, some lubricant leakage is normal for the first few hours of running time until seals seat against the shafts. If condition persists, seal replacement will be necessary.

Excessive end play of shafts — if there is a noticeable (.005" or more measurable) shaft movement when couplings are removed and shaft is moved back and forth, it is an indication of bearing wear. Removing shims between caps and gear case can usually correct the condition and avoid bearing replacement.

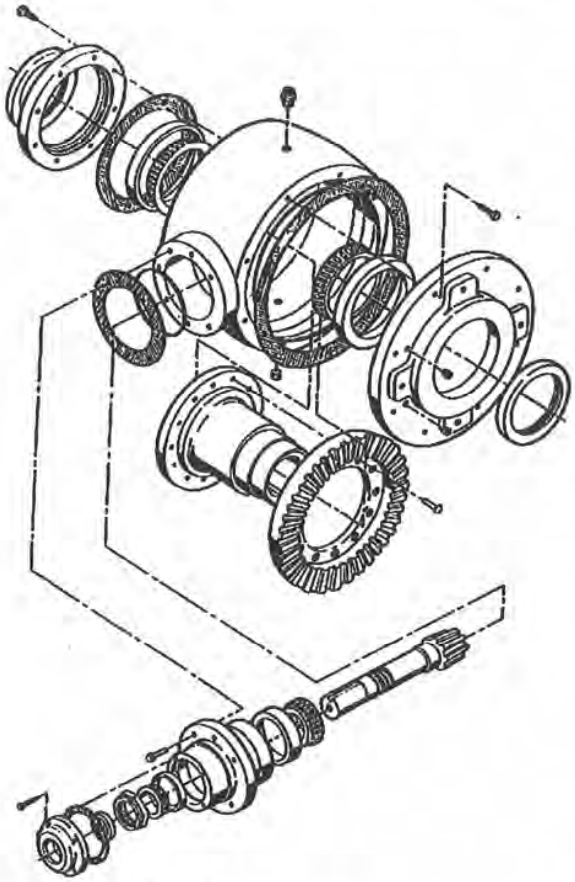

FIGURE 3 — Group 2 Drives

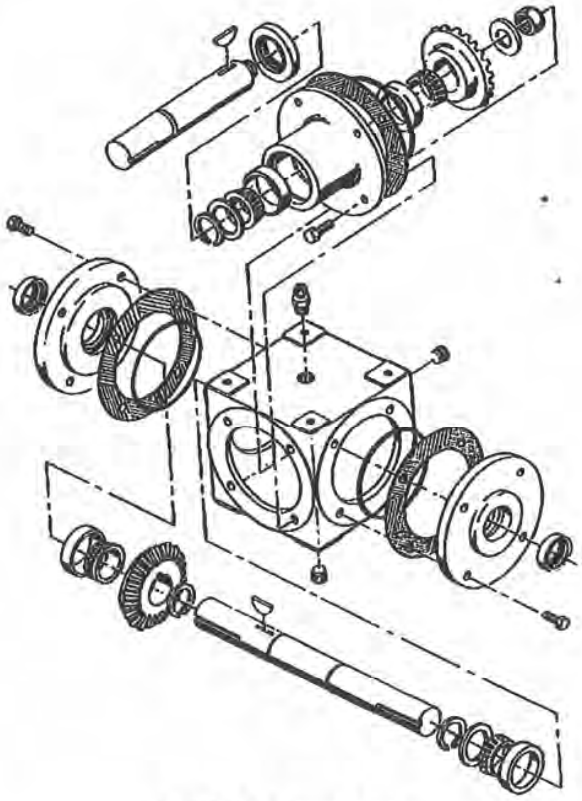

FIGURE 4 — Group 1 Drives

Excessive backlash — might indicate worn gears which often may be readjusted, instead of replacing.

IMPORTANT

In the initial factory assembly, Loctite® was used on the threads of all cap screws. If any screws are removed, a new application of Loctite® is necessary or lock washers must be installed. Note — Screw threads and threaded hole must be degreased before the application of Loctite®.

DISASSEMBLY PROCEDURE

Group 1, 2 and 3 Drives (Refer to Figures 3 and 4 unless otherwise noted.)

1. Disconnect Bevel Gear Drive from drive motor, couplings or driven shafts to guard against personal injury. Remove all sprockets, or sheaves from Bevel Gear Drive shafts with a puller tool to prevent accidental damage to shafts. Remove all keys from keyways.
2. Remove Pipe Plug (1) from bottom of Gear Case (2) and drain all lubricant from unit, preferably while unit is warm.
3. If old seals are to be salvaged, cover keyways with cellophane tape, plastic shim stock or paper. Remove cap screws from Pinion Housing (3) and CAREFULLY remove Pinion Shaft Assembly (4). Be careful to keep bearings clean and not to damage Gear (5) teeth.

2914 Industrial Dr., P. O. Box 1069, Aberdeen, South Dakota 57402-1069, U.S.A. • Phone (605) 225-0360 • Telex 29-2236 • FAX 605-225-0567

Form MN-RA-91

LITHO IN U.S.A.

Disassembly Procedure, Continued

4. Remove cap screws from Open Cap (6) which is opposite the gear side of Cross Shaft Assembly (7, Figure 4) and Output Sleeve Assembly (8, Figure 3) and remove, being careful to keep bearings clean and preventing damage to gear teeth. Slip open cap with nal off cross shaft or output sleeve.

emove cap screws from Open Cap (9) on the gear side of Gear Case (2) and remove cap, shims and o-rings. This completes disassembly of sub-assemblies.

PINION SHAFT DISASSEMBLY

Group 1 Drives — Secure Pinion Shaft (10, Figure 4) with a vise, and remove Lock Nut (12) and washer from shaft. Place pinion assembly in a press with threaded end of shaft up and back side of Bevel Gear (5) supported. Remove gear by pressing out.

Support outer flange surface of Pinion Housing (3) on press anvil and push threaded end of pinion shaft through housing, thereby removing Inner Bearing Cone (14), Outer Bearing Cone (13) Spacer Washer (15), Seal (16) and shaft from pinion housing. Note – disassembly of the pinion shaft from the housing will cause damage to the seal and seal must be replaced. If bearings are to be replaced, see Group 2 instructions below.

Group 2 Drives — Secure Pinion Shaft (10, Figure 3) with a vise, on shaft extension and remove cap screws from Seal Carrier (11), remove it and gasket from Pinion Housing (3). Loosen Lock Nut (12) and remove from pinion shaft. Remove remaining pinion assembly from the vise and place inner flange surface of the Pinion Housing (3) on the anvil of a press. Push shaft through pinion housing, thereby releasing Outer Bearing Cone (13). Whenever gear set is changed, it is recommended that the Inner Bearing Cone (14) be replaced. If bearings are to be replaced, remove Bearing Cups (15) from Pinion Housing (3) with a puller tool or if one is not available, gently tap opposite back sides of the bearing cups with a flat punch so that they are removed evenly and no damage occurs to pinion housing.

Group 3 Drives (not illustrated) — Disassembly of the pinion shaft assembly is essentially the same as Group 1 Drives above except a snap ring must be removed instead of a lock nut so that bevel gear can be removed. M2 and M3 Drives have ball bearings instead of tapered bearings and they may be removed easily from pinion housing after shaft has been pressed out. It is necessary to replace pinion housing seal due to probable damage during disassembly procedure.

CROSS SHAFT DISASSEMBLY

ıp 1 Drives — Cross Shaft Assembly (7, Figure 4) is disassemby by removing Snap Rings (17) and placing Shaft (18) in a press sleeve between anvil and gear.

·igure 5 shows the use of a sleeve to support gear at hub. On certain types of bevel gears it is recommended that this tool be used to protect gear teeth. This tool may be obtained from Hub City or machined for the purpose in your shop.

Push shaft through Bearing Cone (19) and Bevel Gear (20). Invert shaft and rest Bearing Cone (21) on sleeve and anvil or, on some models, on Spacer (22) and push shaft through bearing cone. If bearings are to be replaced, remove Bearing Cups (23) from Open Caps (6 & 9) with a puller tool or, if one is not available, gently tap opposite back sides of the bearing cups with a flat punch so that they are removed evenly and no damage occurs to caps.

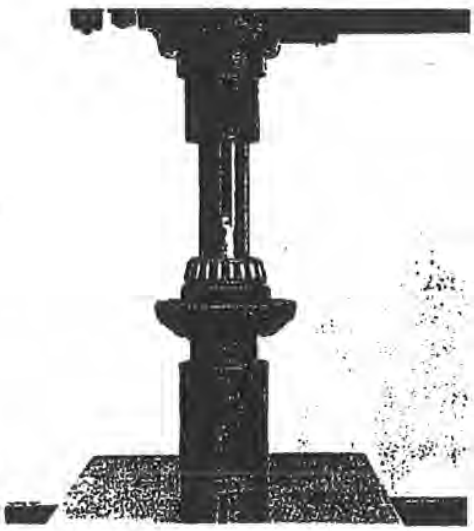

FIGURE 5 – Pressing Shaft out of Bearing and Gear

Variations in Group 1 Drives — On Model 800, 810, 1000, 1010 and 1200 Drives, shouldered cross shafts are used and no snap rings or spacers are used. Cross shaft bearings on these units must be removed by moving them away from shoulder of shaft.

Group 3 Drives (not illustrated) — Disassembly procedure for Models M2 and M3 cross shafts is similar to Group 1 above except that a spacer is located between the bevel gear and the bearing. The spacer is removed with the gear. These models have roller bearings which are easily removed from caps.

OUTPUT SLEEVE DISASSEMBLY

Group 2 Drives — Bearing (24, Figure 3) is removed from Output Sleeve (25) on the side opposite the gear (G.O. side) by placing inner bearing race on press anvil and pushing sleeve out of bearing. If Bearing (26) on the gear side needs to be replaced, it can be removed by tearing apart bearing and removing inner bearing race with a gear puller.

If gear side Bearing (26) is to be salvaged and reused (because of a replacement of ring gear or output sleeve), it must be gently tapped off sleeve with a flat punch after drilling several opposing holes (max. 3/16" dia.) in flange of output sleeve as shown in Figure 6. When enough clearance is obtained between bearing and output sleeve, insert a bearing puller and complete bearing removal. It is a good practice to remove the gear side bearing from the output sleeve if Ring Gear (27) has to be replaced because the bearing could easily be contaminated with metal fragments when ring gear rivets are removed.

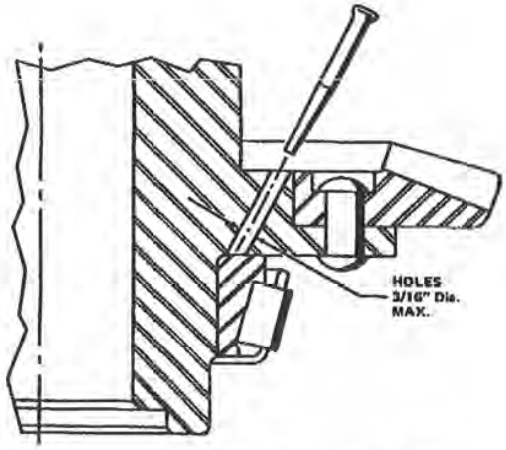

FIGURE 6 – Gear Side Bearing Removal

Ring Gear Removal — Rivets must be removed by either drilling through rivet heads on one side and tapping them out or machine off rivet heads in a lathe and then tap them out. Important – extreme care should be taken to prevent damage to output sleeve.

INSPECTION

Examine all seals for wear or damage and press out of open caps, pinion housings and seal carrier if replacement is necessary. Inspect all other parts for damage or wear before proceeding to reassembly.

ASSEMBLY PROCEDURE

1. All parts including the gear case, should be cleaned thoroughly with an approved, non-flammable, non-toxic solvent. Any accumulation of sludge deposits or corrosion should be removed. Whenever pinion housing and caps are removed, it is recommended that seals, shims and o-rings be replaced. These and other miscellaneous items are included in each Drive Repair Kit. (See Parts Lists)

   Before reassembly, examine pinion and cross shafts or output sleeve for grooving in the shaft seal areas. If the shafts are to be reused, polish out any imperfections with a fine grade of Emery Cloth. The polishing motion should be circumferential, not axial or spiral in direction.

2. Replace Bearing Cups (15 & 28, Figure 3) and (23 and 29, Figure 4) in pinion housing and open caps being careful to remove any foreign particles in the counterbore. Bearing cup must seat squarely in counterbore (Groups 1 and 2 only). If cups must be tapped into place, use a rubber hammer or piece of wood to protect cup surfaces. Do not insert seals at this time.

3. When reassembling Pinion Shaft Assembly (4, Figures 3 & 4), Cross Shaft Assembly (7, Figure 4) and Output Sleeve Assembly (8, Figure 3), refer to Figures 3 and 4 so that all parts are included in their proper position. Be sure that parts are pressed tightly against one another and that no foreign material is included between them.

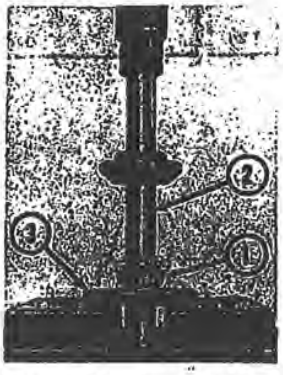

FIGURE 7 – Reassembly of Gear and Bearing Cone

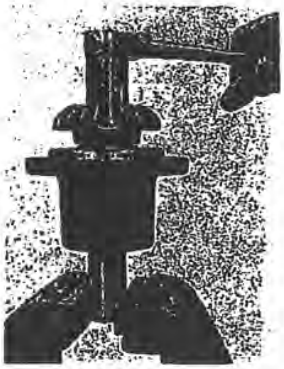

FIGURE 8 – Pinion Assembly Adjustment

Assembly Procedure, Continued

Figure 7 shows the recommended method of pressing the Bearing Cone (1) onto Shaft (2). An Inserting Tool (3) is shown pressing evenly on the bearing inner race. This tool may be obtained from Hub City or machined for the purpose in your shop. A substitute inserting tool may also be made from tubing which would have an I.D. sufficient to accept the shaft and an O.D. no larger than the inner bearing race.

CAUTION

Contact on the cage of the bearing or using the bearing cup to press the bearing on will damage bearing. If it is impossible to install the bearings as recommended above, the alternate method would be to heat the bearing (to increase the I.D. temporarily) and gently tap opposite sides of the bearing inner race with a flat punch without damaging bearing.

Group 1 Drives – Assembly of Cross Shaft Assembly (7, Figure 4) is essentially the reverse of the disassembly procedures except that when installing Bevel Gear (20) on shaft, first insert Snap Rings (17) and woodruff key. Gear is then heated in hot oil and then installed on shaft where it will cool and shrink fit.

The Pinion Shaft Assembly (4, Figure 4) is assembled as follows: Insert snap ring and Spacer (15) on Pinion Shaft (10). Press Outer Bearing Cone (13) on shaft using inserting tool. Place threaded end of shaft into Pinion Housing (3) and press Inner Bearing (14) over shaft and into pinion housing with inserting tool. Install woodruff key and press Pinion Gear (5) on shaft. Assemble Pinion Washer (30) and Lock Nut (12) on shaft. Secure assembly in a vise as shown in Figure 8 and tighten lock nut enough to draw down gear and washer until the bearings bind. Nut is then backed off slightly (approx. 1/4 turn). Release pinion shaft from the vise and rap nut and shaft end sharply with a rubber mallet while supporting pinion housing on vise (see Figure 9). This will free up the bearings so that they will rotate freely with no noticeable end play. Do not install seals at this time. See FINAL ASSEMBLY AND BACKLASH ADJUSTMENT section to complete assembly.

Group 2 Drives – The Output Sleeve Assembly (8, Figure 3) is assembled as follows: Ring Gear (27) must be riveted squarely and firmly to output sleeve. Position ring gear on flange of output sleeve and temporarily fasten with four cap screws and nuts. Position screws 90° apart and tighten in a crisscross sequence until gear is drawn down evenly. Rivet the holes between the cap screws in a crisscross sequence. Remove cap screws and rivet remaining holes. Riveting force must be sufficient to expand the rivets tightly in the holes and form a good rivet head.

FIGURE 9 – Pinion Assembly Adjustment

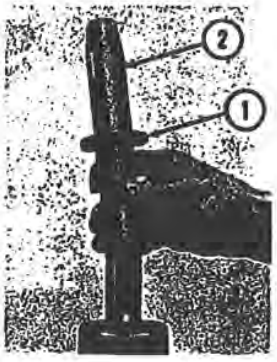

FIGURE 10 – Oil Seal Installation

Place insertion tool and Bearing (24) on press anvil and press output sleeve into bearing. Reverse sleeve assembly and install Bearing (26).

Assembly of Pinion Shaft Assembly (4, Figure 3) is essentially the reverse of the disassembly procedure. Use 1 gasket between Seal Carrier (11) and Pinion Housing (3). Bearing adjustment is similar to Group 1 Drives and Figures 8 and 9 should be referred to. Do not install seals at this time. See FINAL ASSEMBLY AND BACKLASH ADJUSTMENT section to complete assembly.

Group 3 Drives (not illustrated) – Assembly of cross shaft and pinion assemblies is essentially the same as Group 1 Drives except a snap ring holds the pinion shaft assembly together instead of a lock nut. No bearing adjustment is necessary on pinion shaft because ball bearings are self adjusting. Assembly of components in their proper order can be checked by referring to the sectional view on the parts list sheet. Do not install seals at this time.

FINAL ASSEMBLY & BACKLASH ADJUSTMENT

Groups 1, 2 and 3 Drives – Install Open Cap (9, Figures 3 & 4) on the gear side of Case (2, Figures 3 & 4) with two .005 blue shims. Fasten caps and shims to gear case by torquing down cap screws securely. Insert Output Sleeve Assembly (8, Figure 3) or Cross Shaft Assembly (7, Figure 4) carefully through opening in case and into open caps. Install two .005 blue shims and Open Cap (8, Figures 3 & 4) on the case side which is opposite the gear with cap screws and torque down all screws evenly.

Bearings are then adjusted by removing or adding .005 blue shims until the bearings bind and then add one .002 red shim at a time until shaft or sleeve rotates freely, with no end play. Note — Position of gear will be closer to center if the number of shims on each end cap does not vary by more than one.

Insert Pinion Shaft Assembly (4, Figures 3 and 4) carefully into Case (2) using two .005 blue shims and cap screws. Gear backlash is adjusted by moving shims from the cross shaft or output sleeve open cap on the gear side to the side opposite the gear until gears rotate freely, with no noticeable backlash. At this point, move two .002 red shims back to the gear side end cap and the gears will then be properly adjusted. Note — if there are not enough shims left in open cap opposite gears to move two shims back — further gear adjustment must be made by adding or removing shims from between the pinion housing and case and repeat the entire procedure listed in this and two preceeding paragraphs.

When bearings and gear backlash have been properly adjusted, remove cap screws a final time, clean threads on screws and in holes with degreaser. Coat threads with Loctite . If Loctite or equivalent is not available, use lock washers (not supplied) behind screw heads. Install o'rings on caps and pinion housing. Torque down all screws evenly.

OIL SEAL INSTALLATION

Group 1, 2 and 3 Drives – Oil seals (30 & 31, Fig. 3 & 4) and (16, Fig. 4) can now be installed in open caps and pinion housings. Slip Seal (1, Figure 10) over tapered end of Pilot Sleeve (2, Figure 10), making sure that the spring loaded lip of the seal is facing toward the Bevel Gear Drive. Slip pilot sleeve over shaft and down until end of sleeve is against bearing. Install Seal Driver (1, Figure 11) over pilot sleeve and tap seal down sleeve until it is seated in housing or cap. Remove seal driver and pilot sleeve. These installation tools are available from Hub City.

FIGURE 11 – Oil Seal Installation

If a pilot sleeve and seal driver (or their equivalent) are not readily available, seal must be installed with a rubber hammer or block of wood to prevent seal damage.

CAUTION

Damage to seals can be avoided by covering the shaft keyways with cellophane tape, plastic shim stock or paper before sliding seals onto shaft.

REFILLING GEAR CASE WITH LUBRICANT

Group 1, 2 and 3 Drives – Clean and recoat Drain Plug (1, Figures 3 & 4) with Loctite® and replace in bottom of gear case. Remove Fill and Breather Plug (32, Figures 3 & 4) and Oil Level Plug (33, Figures 3 & 4). Fill gear case with recommended lubricant and follow all recommended procedures as detailed in Lubrication and Installation Instructions which are included with each Drive.

DISASSEMBLY PROCEDURE

Group 4 Drives (Refer to Figure 12 unless otherwise noted)

Field replacement of bevel gears, shafts, bearings, oil seals and O-rings may be made on AD Series Bevel Gear Drives. If gear case, open or closed caps or spacers need replacing it is recommended that entire unit be returned to the Hub City Factory for service. If this is inconvenient, the worn or damaged spacer or cap may be sent to the factory so that it can be precision duplicated. Each AD Series Drive contains caps and spacers which are precision matched to the gear case.

Disassembly of Bevel Gear Drive is accomplished by removing Drain Plug (1) and Fill Plug (2) from Gear Case (3) and draining (preferably while warm) all lubricant from gear case.

Pinion Shaft Assembly (4) is removed from case by taking out Snap Ring (5) and carefully sliding entire assembly out so that gear teeth are not damaged and bearings are kept clean. Remove Snap Ring (6) on the opposite gear side of case and carefully slide Output Shaft Assembly (7) out of case. Remove Snap Ring (8) from the gear side of case and slide out Closed Cap (9) and remaining Ball Bearing (10). Note All parts are precision fit so no shims are necessary. Bearings should be removed easily with only light pressure on the outer race.

IMPORTANT

All parts which are intended for reuse must be marked when they are disassembled so that they are reassembled in their exact original position in the case. If seals are to be reused, cover all shaft keyways with cellophane tape, plastic shim stock or paper to avoid seal damage.

PINION SHAFT DISASSEMBLY

Slide Open Cap (11, Figure 12) and Outer Bearing (12) off Pinion Shaft (13). Drive Spring Pin (14) out of Bevel Gear (15) and pinion shaft. Place pinion shaft in a press with shoulder of gear resting on the press anvil. Remove gear by pushing shaft through gear. Remove inner Ball Bearing (16) from shaft. If pinion shaft is to be replaced and Spacer (17) salvaged, press off spacer carefully from shaft so that it may be broken on Loctite® used to affix spacer to shaft. Remove Seal (18) from open cap with a driver tool or gently tap opposite edges of inner seal surface with a flat punch so that they are removed only and no damage occurs to open cap counterbore. Remove O-ring (19) from open cap.

OUTPUT SHAFT DISASSEMBLY

The disassembly of the Output Shaft Assembly (7, Figure 12) is essentially the same as the procedure outlined above for the pinion shaft.

ASSEMBLY PROCEDURE

Group 4 Drives

Clean and inspect all parts as detailed in Step 1 of Assembly Procedure, Group 1, 2 and 3 Drives.

Align gears on shafts and secure with spring pins. Slide Inner Ball Bearing (16) tightly against bevel gear. Apply Loctite® Primer N to both shaft and spacer and apply Loctite® Adhesive #319 to spacer area of shaft only and slide Spacer (17) on Pinion Shaft (13) and against inner bearing. On Output Shaft Assembly (7), Spacer (20) is affixed on Output Shaft (21) so that it is tight against Bevel Gear (22).

CAUTION

DO NOT GET LOCTITE® ON SEALS OR BEARINGS.

Install O-rings into Caps (9, 11 & 25) and Seals (18 & 23) into open caps with pilot sleeve and seal driver tools (see OIL SEAL INSTALLATION, Page 6). Install Ball Bearing (24) on output shaft and Ball Bearing (12) on pinion shaft. Slip pilot sleeve over keyway of output shaft and slide Open Cap (25) down pilot sleeve until it is tightly against Bearing (24). Slip pilot sleeve over keyway end of Pinion Shaft (13) and slide Open Cap (11) down pilot sleeve until it is tightly against Ball Bearing (12). Important – If the pilot sleeve tool is not available, keyways must be covered with cellophane tape, plastic shim stock, etc., so that keyways do not damage seals.

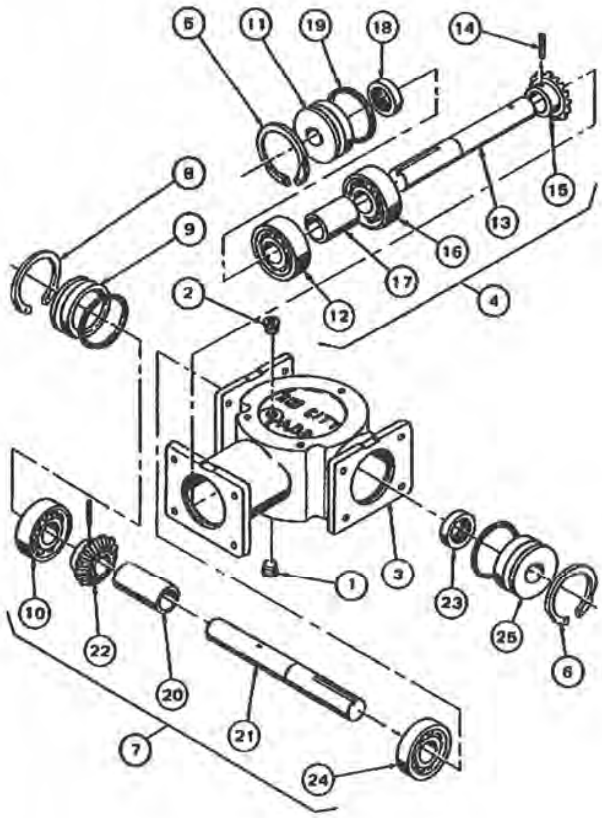

FIGURE 12 – Group 4 Drives

FINAL ASSEMBLY

Group 4 Drives – Insert entire Output Shaft Assembly (7) into gear case and secure Open Cap (25) with Snap Ring (6). Slide remaining Ball Bearing (10) over gear end of output shaft and tightly against Bevel Gear (22). Install Closed Cap (9) in gear case and secure with Snap Ring (8).

Insert entire Pinion Shaft Assembly (4) into gear case, being careful to see that bevel gears mesh. Secure with Snap Ring (5).

No adjustment of bearings or gear backlash is necessary as all parts have been precision fit. However, care should be taken that no foreign material is present between components during assembly that could alter the precision spacing.

Clean threads on Drain Plug (1) and drain hole with solvent, coat with Loctite® and install in gear case. Fill gear case with the amount of lubricant recommended in chart shown below with Lubriplate® #5555.

LUBRICANT QUANTITIES

MODEL	QTY. REQ.	MODEL	QTY. REQ.
AD-1 & AD-4	1/2 OZ.	AD-2 & AD-5	1-1/2 OZ.
		AD-3	8 OZ.

For further information that may be helpful, see the Lubrication, Installation and Illustrated Replacement Parts sheets for your Bevel Gear Drive. Should a particular problem arise or additional information be required, contact the nearest Hub City Sales Office, or Industrial Power Transmission Distributor which are listed in the Yellow Pages or contact Hub City – Aberdeen, S.D.

13 2013 ELECTRICAL & MOTOR INSPECTION REPORT

See next 14 pages

LOAD TEST REPORT

Aecom
300 Water Street
Whitby, Ontario, Canada
L1N 9J2

PERFORMED BY:
WALLWIN ELECTRIC SERVICES LTD.
50 INNISFIL STREET
BARRIE, ONTARIO, CANADA
L4N 4K5
www.wallwinelectric.com

WALLWIN
Commercial • Industrial • Design Build • Residential • Motor Repair • Automation • Voice & Data Networks

50 Innisfil Street
Barrie, Ontario L4N 4K5
(705)726-1859 Fax:(705)726-8450
info@wallwinelectric.com
www.wallwinelectric.com

50 Innisfil Street
Barrie, Ontario L4N 4K5
Phone: (705)726-1859
Fax: (705)727-7607
info@wallwinelectric.com
www.wallwinelectric.com

Scope
On May 28, 2013, Wallwin Electric Services Ltd. provided load testing (including data logging and electrical inspections) of electrical motors at Portage gate and Big Chaudière gate on the French River. All testing and inspections were performed according to the Electrical Safety Authority recommendations.

Detailed data logging files documented during the execution of this project are contained in the additional support data (separate file). This summary contains data for the completed inspections and overview of motor load test results.

Purpose
The purpose of this inspection and subsequent report is to provide information relative to the operation of the electrical controls and motors located at the Portage gate and Chaudière gate on the French River. This report is intended to assist in planning for upgrades to the electrical equipment, increase safety through inspections, and help minimize downtime. It is not intended to imply that other equipment issues or recommendations not covered in this scope may or may not exist at the time of inspection.

Procedure
All inspections and recommendations are performed in accordance with Wallwin Electric Services Ltd. standard procedures including but not limited to selected specifications from the Ontario Electrical Safety Code, Electrical Apparatus Service Association and Electrical Safety Authority.

Equipment
Electrical equipment utilized for this project included:

- Hioki 3169 Clamp ON Power Tester and Data Logger
  (Used to data log Volts, Amps, Watts, VAR, VA, Frequency set to long at 500 msec intervals).

- Fluke 1520 MegOhmMeter (Megger)
  (Used to apply a 1000 Volts DC for a given period of time to test the resistance of the insulation on the motor winding)

- Fluke 187 True RMS Multi-Meter
  (Used to measure resistance phase to phase and phase to ground).

WALLWIN

Commercial ● Industrial ●Design Build ● Residential ●
Motor and Pump Repair ● Alternative Energy ● Automation & Control

50 Innisfil Street
Barrie, Ontario L4N 4K5
Phone: (705)726-1859
Fax: (705)727-7607
info@wallwinelectric.com
www.wallwinelectric.com

Site and Location Information

Site Information

Name: Portage Gate – French River
Power: Single Phase 240VAC

Motor Information

Name: **Portage Gate #1**
Manufacturer: Flender Himmel (AK100LB/4) – Brake Motor
Horse Power: 3.0 HP
Voltage: 240 VAC Single Phase
Amperage: 12.8 Amps
RPM: 1735 RPM
Frequency: 60 Hz
Service Factor: 1.15 SF
Type: TEFC
Insulation Class: F
Duty: CONT

Motor Ohm Test – Portage Gate #1

Motor Ohm Readings: (Multi-Meter)
Phase A to Ground: OL MΩ
Phase B to Ground: OL MΩ
Phase A to B: OL MΩ

Motor Ohm Readings: (Megger – 1000V Test)
Phase A to Ground: 1420 MΩ
Phase B to Ground: 1580 MΩ

Summary – Portage Gate #1

The motor ohm reading tested using a megger and multi-meter all look to be in excellent condition.

Motor Data Log – Portage Gate #1

The following is a summary of results logged during operation of gate #1

Phase A Current Max: 10.76 Amps
Phase B Current Max: 10.75 Amps

These maximum currents logged fall into range for this motor's rating.

WALLWIN

Commercial ● Industrial ●Design Build ● Residential ●
Motor and Pump Repair ● Alternative Energy ● Automation & Control

50 Innisfil Street
Barrie, Ontario L4N 4K5
Phone: (705)726-1859
Fax: (705)727-7607
info@wallwinelectric.com
www.wallwinelectric.com

Motor Voltage Phase A:
Min: 121.23 VAC Max: 126.44 VAC Average: 123.36 VAC

Motor Voltage Phase B:
Min: 121.28 VAC Max: 126.49 VAC Average: 123.42 VAC

Operation of this motor was logged as the motor was first run in the close direction. Once the gate was fully closed the test was paused and then the gate was operated in the open direction back to the position started.

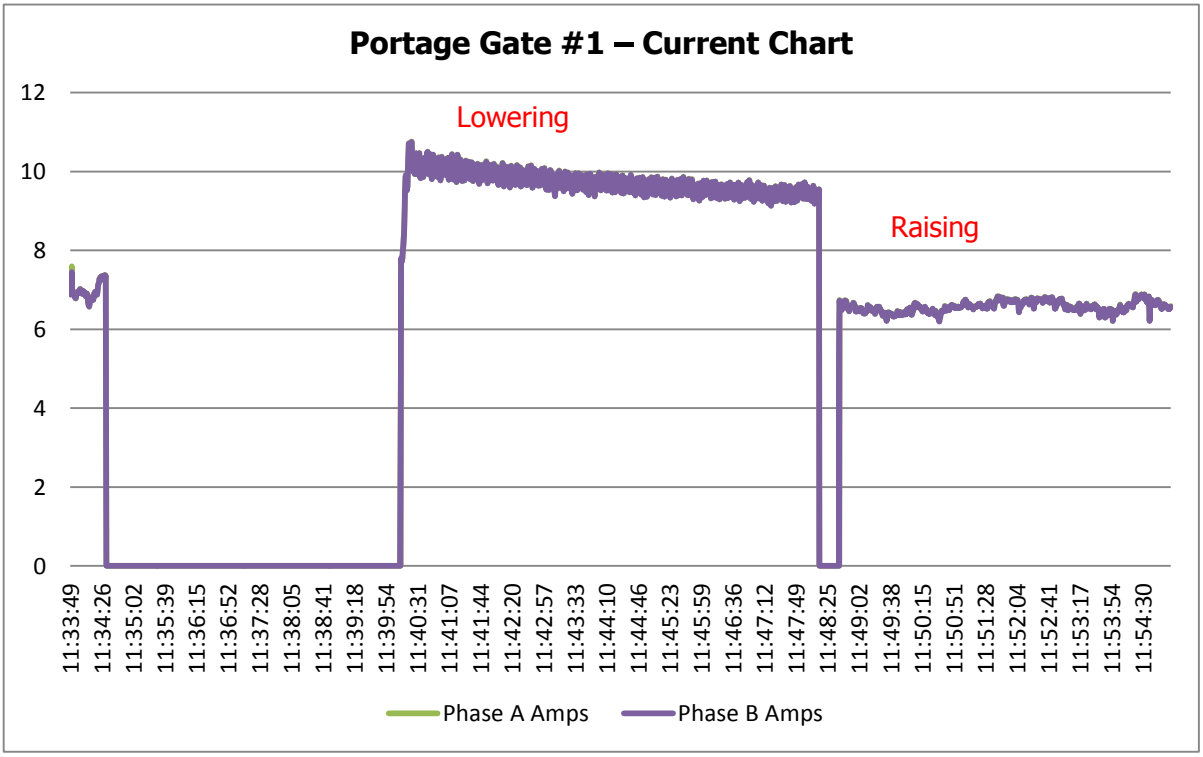

WALLWIN

Commercial ● Industrial ●Design Build ● Residential ●
Motor and Pump Repair ● Alternative Energy ● Automation & Control

50 Innisfil Street
Barrie, Ontario L4N 4K5
Phone: (705)726-1859
Fax: (705)727-7607
info@wallwinelectric.com
www.wallwinelectric.com

Visual Control Panel Inspection – Portage Gate #1

Visual inspection of the control panel for gate #1 showed some minor issues:

- Pilot lights not functioning due to dead bulbs (in main panel and local control station). We recommend changing all the bulbs to LED style for longer life.
- Rotary limit switch does not appear to be connected or functioning.
- Heater in remote panel is in very terrible shape and should be changed to prevent downtime. (Immediate action required).
- Rope slack limit switch is not functioning correctly due to the grease build up.

The motor contactors did not show signs of arcing; the spring felt solid and free. The panel had many loose terminations and future preventative maintenance should be competed to help minimize break downs.

Gate #1 – Control Panel

Gate #1 – Inside Control Panel

50 Innisfil Street
Barrie, Ontario L4N 4K5
Phone: (705)726-1859
Fax: (705)727-7607
info@wallwinelectric.com
www.wallwinelectric.com

Gate #1 – Local Control Station

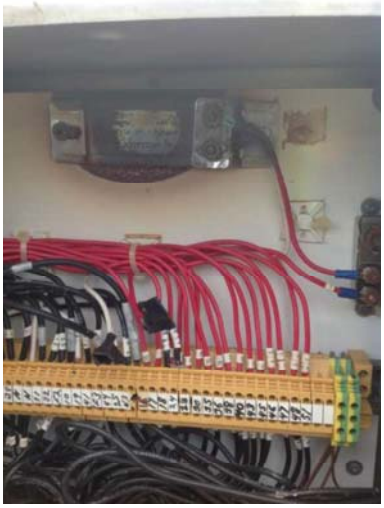

Gate #1 – Inside Local Station

WALLWIN

Commercial ● Industrial ●Design Build ● Residential ●
Motor and Pump Repair ● Alternative Energy ● Automation & Control

50 Innisfil Street
Barrie, Ontario L4N 4K5
Phone: (705)726-1859
Fax: (705)727-7607
info@wallwinelectric.com
www.wallwinelectric.com

Site and Location Information

Site Information

Name: Portage Gate – French River
Power: Single Phase 240VAC

Motor Information

Name: **Portage Gate #2**
Manufacturer: Flender Himmel (AK100LB/4) – Brake Motor
Horse Power: 3.0 HP
Voltage: 240 VAC Single Phase
Amperage: 12.8 Amps
RPM: 1735 RPM
Frequency: 60 Hz
Service Factor: 1.15 SF
Type: TEFC
Insulation Class: F
Duty: CONT

Motor Ohm Test – Portage Gate #2

Motor Ohm Readings: (Multi-Meter)
Phase A to Ground: OL MΩ
Phase B to Ground: OL MΩ
Phase A to B: OL MΩ

Motor Ohm Readings: (Megger – 1000V Test)
Phase A to Ground: 1240 MΩ
Phase B to Ground: 1120 MΩ

Summary – Portage Gate #2

The motor ohm reading tested using a megger and multi-meter all look to be in excellent condition.

Motor Data Log – Portage Gate #2

The following is a summary of results logged during operation of gate #2

Phase A Current Max: 61.44 Amps
Phase B Current Max: 61.53 Amps

50 Innisfil Street
Barrie, Ontario L4N 4K5
Phone: (705)726-1859
Fax: (705)727-7607
info@wallwinelectric.com
www.wallwinelectric.com

The maximum current logged are high and as a result caused the motor overloads to trip. Usually this represents a centrifugal switch that does not drop out of the circuit once the motor has reached approximately 75% speed. We recommend replacing the centrifugal switch to prevent further problems and downtime.

Motor Voltage Phase A:
Min: 113.79 VAC Max: 123.89 VAC Average: 121.49 VAC

Motor Voltage Phase B:
Min: 113.85 VAC Max: 123.96 VAC Average: 121.56 VAC

Operation of this motor was logged as the motor was first run in the close direction. Once the gate was fully closed the test was paused and then the gate was operated in the open direction back to the position started. Spikes represent motor starting and the start winding not disengaging.

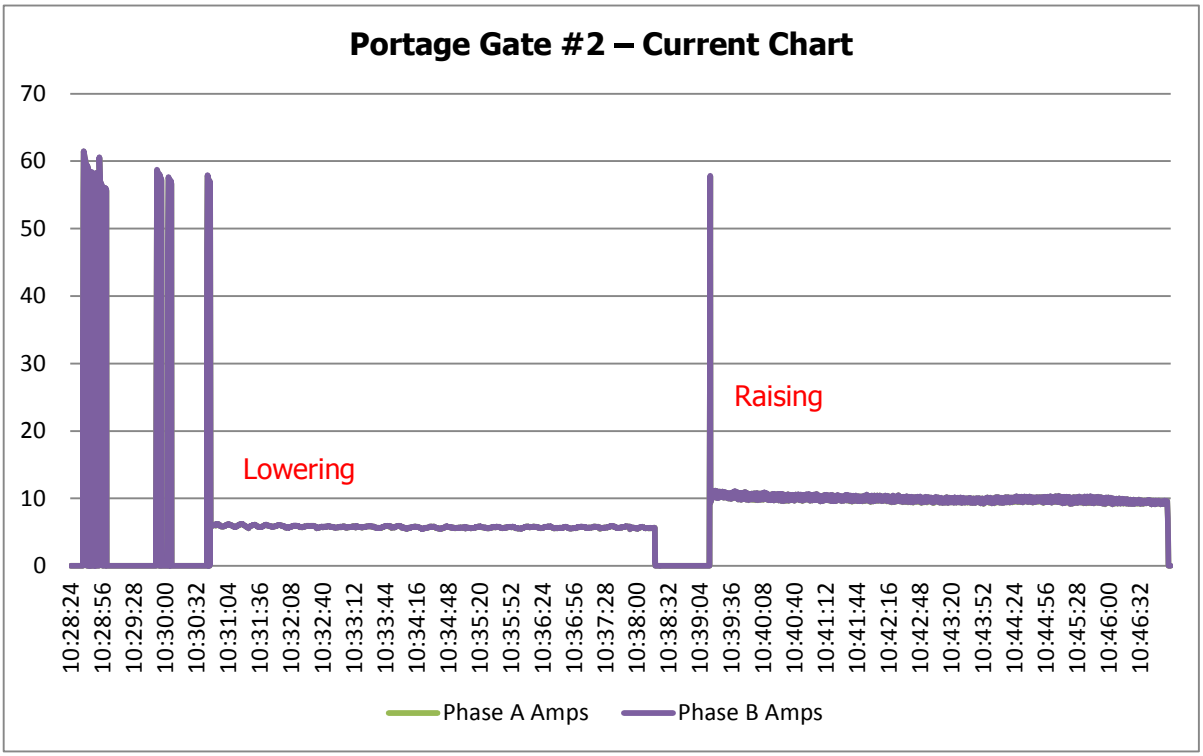

WALLWIN

Commercial ● Industrial ●Design Build ● Residential ●
Motor and Pump Repair ● Alternative Energy ● Automation & Control

50 Innisfil Street
Barrie, Ontario L4N 4K5
Phone: (705)726-1859
Fax: (705)727-7607
info@wallwinelectric.com
www.wallwinelectric.com

Visual Control Panel Inspection – Portage Gate #2

Visual inspection of the control panel for gate #2 showed some concerns:

- Pilot lights not functioning due to dead bulbs (in main panel and remote control station). We recommend changing all the bulbs to LED style for longer life.
- Rotary limit switch does not appear to be connected or functioning.
- Heater in remote panel is in very terrible shape and should be changed to prevent downtime. (Immediate action required).
- Field controls did not seem to be functioning correcting; gate would not open or close at times and no alarm was given.

The motor contactors did not show signs of arcing; the spring felt solid and free. The panel had many loose terminations and future preventative maintenance should be competed to help minimize break downs.

Gate #2 – Control Panel

Gate #2 – Inside Control Panel

50 Innisfil Street
Barrie, Ontario L4N 4K5
Phone: (705)726-1859
Fax: (705)727-7607
info@wallwinelectric.com
www.wallwinelectric.com

Gate #2 – Local Control Station

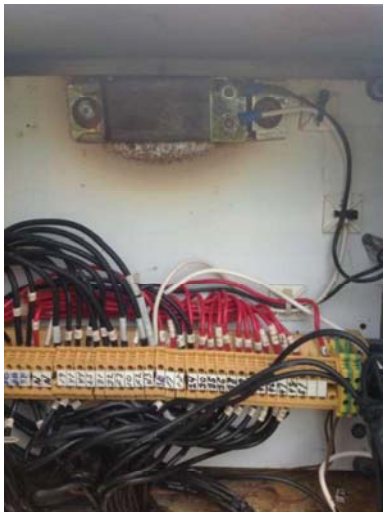

Gate #2 – Inside Local Station

WALLWIN

Commercial ● Industrial ●Design Build ● Residential ●
Motor and Pump Repair ● Alternative Energy ● Automation & Control

50 Innisfil Street
Barrie, Ontario L4N 4K5
Phone: (705)726-1859
Fax: (705)727-7607
info@wallwinelectric.com
www.wallwinelectric.com

Site and Location Information

Site Information

Name: Portage Gate – French River
Power: Single Phase 240VAC

Motor Information

Name: **Portage Gate #3**
Manufacturer: Flender Himmel (AK100LB/4) – Brake Motor
Horse Power: 3.0 HP
Voltage: 240 VAC Single Phase
Amperage: 12.8 Amps
RPM: 1735 RPM
Frequency: 60 Hz
Service Factor: 1.15 SF
Type: TEFC
Insulation Class: F
Duty: CONT

Motor Ohm Test – Portage Gate #3

Motor Ohm Readings: (Multi-Meter)
Phase A to Ground: OL MΩ
Phase B to Ground: OL MΩ
Phase A to B: OL MΩ

Motor Ohm Readings: (Megger – 1000V Test)
Phase A to Ground: 1430 MΩ
Phase B to Ground: 1480 MΩ

Summary – Portage Gate #3

The motor ohm reading tested using a megger and multi-meter all look to be in excellent condition.

Motor Data Log – Portage Gate #3

The following is a summary of results logged during operation of gate #3

Phase A Current Max: 61.57 Amps
Phase B Current Max: 61.50 Amps

WALLWIN

Commercial ● Industrial ●Design Build ● Residential ●
Motor and Pump Repair ● Alternative Energy ● Automation & Control

50 Innisfil Street
Barrie, Ontario L4N 4K5
Phone: (705)726-1859
Fax: (705)727-7607
info@wallwinelectric.com
www.wallwinelectric.com

These maximum currents logged fall into range for this motor's rating. The elevated current noted lasted less than a half a second which is typical of starting current in this type of motor. (Future preventive maintenance should be completed to help prevent the centrifugal switch failure).

Motor Voltage Phase A:
Min: 115.94 VAC Max: 125.07 VAC Average: 123.68 VAC

Motor Voltage Phase B:
Min: 115.99 VAC Max: 125.13 VAC Average: 123.74 VAC

Operation of this motor was logged as the motor was first run in the close direction. Once the gate was fully closed the test was paused and then the gate was operated in the open direction back to the position started. Spikes represent motor starting.

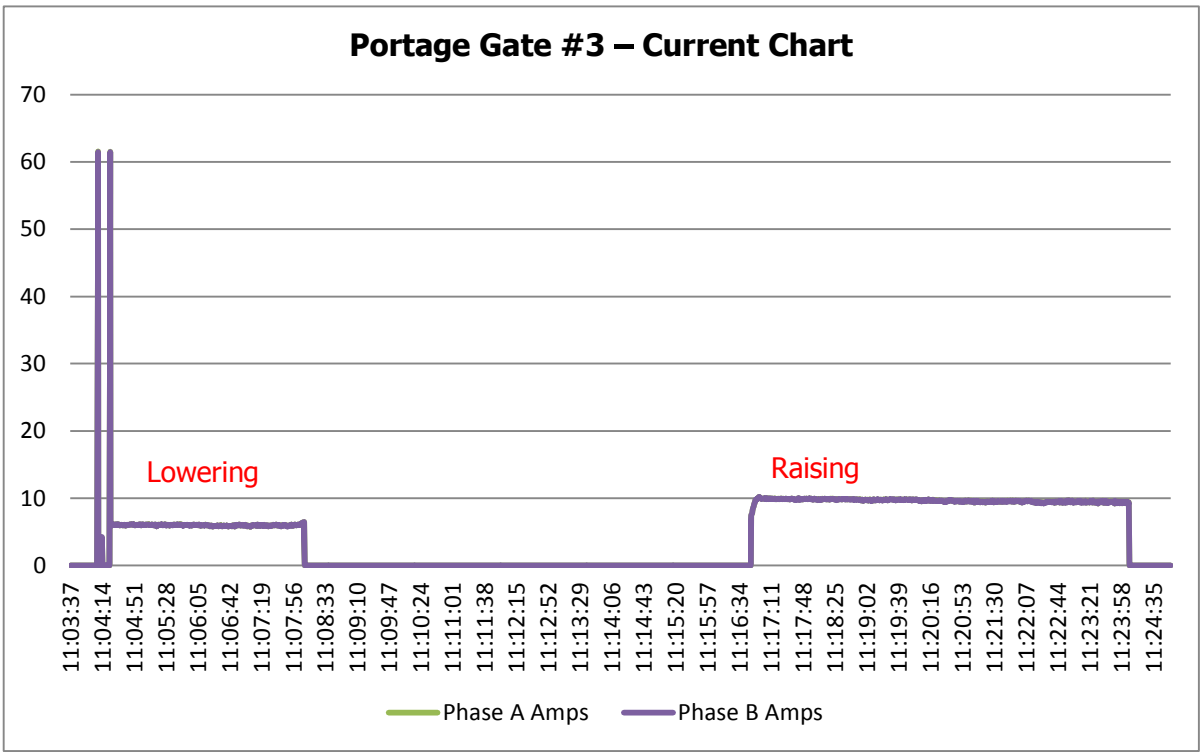

WALLWIN

Commercial ● Industrial ●Design Build ● Residential ●
Motor and Pump Repair ● Alternative Energy ● Automation & Control

50 Innisfil Street
Barrie, Ontario L4N 4K5
Phone: (705)726-1859
Fax: (705)727-7607
info@wallwinelectric.com
www.wallwinelectric.com

Visual Control Panel Inspection – Portage Gate #3

Visual inspection of the control panel for gate #3 showed some concerns:

- Pilot lights not functioning due to dead bulbs (in main panel and remote control station). We recommend changing all the bulbs to LED style for longer life.
- Rotary limit switch does not appear to be connected or functioning.
- Blown panel fuse. (Fuse was replaced – due to remote control station heater).
- Heater in remote panel is in very terrible shape and should be changed to prevent downtime. (Immediate action required).
- Rope slack limit switch is not functioning correctly due to the grease build up.

The motor contactors did not show signs of arcing; the spring felt solid and free. The panel had many loose terminations and future preventative maintenance should be competed to help minimize break downs.

Gate #3 – Control Panel

Gate #3 – Inside Control Panel

50 Innisfil Street
Barrie, Ontario L4N 4K5
Phone: (705)726-1859
Fax: (705)727-7607
info@wallwinelectric.com
www.wallwinelectric.com

Gate #3 – Control Panel – blown fuse

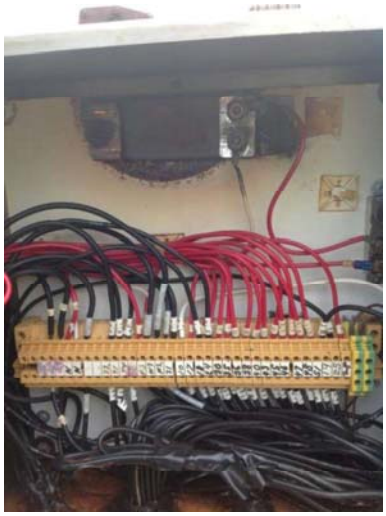

Gate #3 – Inside Local Station

ANNEX "B"
BASIS OF PAYMENT

Annex "B" will form the Basis of Payment for the resulting Contract and should not be filled in at the bid submission stage.

B1. Contract Firm Price

A)	**Known Work** For the work of Tasks 1-5 and Tasks 8 & 9 in Annex "A", a FIRM PRICE of:	$_____
B)	**Applicable taxes** on line A	$_____
C)	**Total Firm Price**, Applicable Taxes Included	$_____

B2. Unscheduled Work

The Contractor will be paid for unscheduled work arising, as authorized by Canada. The authorized unscheduled work will be calculated as follows:

"Number of hours (to be negotiated) x $_____, being the Contractor's firm hourly charge-out labour rate which includes overhead, consumables, and profit, plus net laid-down cost of materials to which will be added a mark-up of 10%, plus applicable taxes, of the total cost of material and labour. The firm hourly charge-out labour rate and the material mark-up will remain firm for the duration of the Contract and any subsequent amendments."

B2.1 Notwithstanding definitions or usage elsewhere in this document, or in the Contractor's Cost Management System, when negotiating hours for unscheduled work, PWGSC will consider only those hours of labour directly involved in the production of the subject work package.

Elements of Related Labour Costs identified in B2.2 below, will not be negotiated, but will be compensated for in accordance with B2.2.

B2.2 Allowance for Related Labour Costs such as: Management, all Supervision, Purchasing, and Material Handling, Quality Assurance and Reporting, Estimating, and Preparing Unscheduled Work Submissions will be included as Overhead for the purposes of determining the Charge-out Labour Rate entered in line B2 above.

Also include as Overhead the cost of vehicles, equipment, consumables, and tools required to be used during work at the dam site.

B2.3 The 10% mark-up rate for materials will also apply to subcontracted costs. The mark-up rate includes any allowance for material and subcontract management not allowed for in the Chargeout Labour Rate. The Contractor will not be entitled to a separate labour component for the purchase and handling of materials or subcontract administration.

Pro-rated Prices Unscheduled Work.—Hours and prices for unscheduled work shall be based on comparable historical data applicable to similar work at the same facility.

B3. Overtime

The Contractor must not perform any overtime under the Contract unless authorized in advance and in writing by the Contracting Authority.

There will be no overtime payment for Known Work.

Requests for payment must be accompanied by a copy of the overtime authorization and a report containing the overtime performed pursuant to the written authorization.

Payment for authorized overtime will be calculated as follows:

For unscheduled work, the Contractor will be paid the authorized overtime hours at the quoted charge-out labour rate plus the following premium rates:

For Time and one half an hourly rate of:	$_____	Applicable for working hours beyond 8 hours per day Monday through Friday and for all work done on a Saturday.
For Double time an hourly rate of:	$_____	Applicable for all work done on Sundays and Statutory Holidays.

The above premiums will be calculated by taking the average hourly direct labour rate premiums, plus certified fringe benefit, plus profit on labour premium and fringe benefits.

These rates will remain firm for the duration of the Contract, including all amendments and are subject to audit if considered necessary by Canada.

ANNEX "C"
PROCEDURE FOR PROCESSING UNSCHEDULED WORK

C1. Purpose

The Unscheduled Work Procedure has been instituted for the following purposes:

- To establish a uniform method of dealing with requests for Unscheduled Work;
- To obtain the necessary Technical Authority approval and Contracting Authority authorization before Unscheduled Work commences

C2. Definitions

1. An Unscheduled Work Procedure is a contractual procedure whereby changes to the scope of Work under the Contract may be defined, priced and contractually agreed-to. Such changes may arise from;
   - "Work Arising" from opening up of machinery and/or surveys of equipment and material; or,
   - "New Work" not initially specified but found to be logically required to complete the intent of the Contract.

2. The procedure does not allow for the correction of deficiencies in the Contractor's Bid.

3. No Unscheduled Work may be undertaken by the Contractor without written authorization of the Contracting Authority.

4. Work undertaken without written Contracting Authority authorization will be considered the Contractor's responsibility and cost.

C3. Procedure

1. The Technical Authority will initiate the process by defining an Unscheduled Work Request in a technical memo, which may include drawings, sketches, additional specifications, other clarifying details as appropriate. The Technical Authority will issue a Serial Number for the Unscheduled Work Request to assist in tracking.

2. The Contractor will respond in writing to the Technical Authority with a Proposal, or there may be further technical discussions and clarifications on the scope of Unscheduled Work before a Proposal can be provided. See paragraph C4 below for details of Proposal requirements.

3. In the event the Technical Authority does not wish to proceed with the work, the Technical Authority will cancel the Unscheduled Work Request in writing. That Serial Number will not be re-used.

4. Upon technical agreement on the scope and the Technical Authority's judgement that the price is fair and reasonable, the Contracting Authority will provide a written description, which is the final summary of the definition of the Unscheduled Work Request and the costs negotiated and agreed-to. In the event the price involves a Credit, the price will be noted as "credit" accordingly. The Contracting Authority's written summary is authorization for the Unscheduled Work to proceed.

5. Notwithstanding the foregoing, the Contractor may at any time propose to the Technical Authority in writing, either by letter or some type of Defect Advice Form (this is the Contractor's own form), that certain Unscheduled Work should be carried out. The Technical Authority will either reject the suggestion and advise the Contractor and the Contracting Authority, or will define an Unscheduled Work Request and proceed as described above.

C4. Details of Contractor Proposal

1. The Contractor will electronically submit his Proposal to the Technical Authority together with all price support, any qualifications, remarks or other information requested. The price support is a breakdown of the Contractor's unit rates, estimates of person hours by trade, estimate of material cost per item for both the contractor and all of its subcontractors including quotations. The Contractor will also estimate the effect of implementing Unscheduled Work on project schedule.

2. On request to the Contractor, the Technical Authority and Contracting Authority shall be permitted to meet with any proposed Subcontractor or material supplier for discussion of the price, and always with the Contractor's representative present.

3. The Contractor shall provide copies of purchase orders and paid invoices for Subcontracts and/or materials, including stocked items.

4. The Contractor shall provide a minimum of two quotations for Subcontracts or materials. If other than the lowest, or sole source is being recommended for quality and/or delivery considerations, this shall be noted.

C5. <u>Urgent Requirements</u>

1. In the event that the Technical Authority requires Unscheduled Work of an urgent nature, or an impasse has occurred in price negotiations, the commencement of the Unscheduled Work should not be unduly delayed and should be processed as follows, in either case.

2. If the Technical Authority wishes to proceed with the work, the Contracting Authority will provide a summary of the Unscheduled Work Requirement but with the notation "CEILING PRICE SUBJECT TO DOWNWARD ADJUSTMENT" and allocate a Serial Number having the suffix "A".

3. The work will proceed with the understanding that, following an audit of the Contractor's actual costs for completing the described work, the cost will be finalized at the ceiling price, or lower if justified by the audit. The Contracting Authority will issue a revised summary with finalized costs, with the same Serial Number without the suffix "A," and bearing a notation that this is replacing and canceling the version having the same Serial Number with the suffix "A".

4. NOTE: Unscheduled Work Requests bearing Serial Numbers with a suffix "A" shall not be included in any contract amendments, and therefore no payment shall be made until final resolution of the price and incorporation into the contract.

C6. <u>Contract Amendment</u>

The Contract will be amended from time to time in accordance with the Contract terms to incorporate the costs authorized packages of Unscheduled Work.

ANNEX "D"
FINANCIAL BID PRESENTATION SHEET

D1. Price for Bid Evaluation

Estimated hours provided in the table below are for evaluation purposes only.

A)	**Known Work** For the work of Tasks 1-5 and Tasks 8 & 9 in Annex "A", a FIRM PRICE of:	$_____
B)	**Unscheduled Work – Labour Costs – Regular Hours** Regular hours: Estimated labour hours at a firm Chargeout Labour Rate, including overhead and profit, for the work of Tasks 6 & 7 of Annex "A": 100 man-hours x $_____ per hour, for a PRICE of : (See Article D2.1 and D2.2 below)	$_____
C)	**Unscheduled Work – Labour Costs – Overtime Hours – Time and One Half** Overtime premium for time and one half: 8 man-hours x $_____ per hour for a PRICE of: (See Article D3 below)	$_____
D)	**Unscheduled Work – Labour Costs – Overtime Hours – Double Time** Overtime premium for double time: 4 man-hours x $_____ per hour for a PRICE of: (see Article D3 below)	$_____
E)	**EVALUATION PRICE (applicable taxes excluded)** Sum of lines A + B + C + D for an evaluation price of:	$_____

D2. Unscheduled Work

The Contractor will be paid for unscheduled work arising, as authorized by Canada. The authorized unscheduled work will be calculated as follows:

> "Number of hours (to be negotiated) X $_____, being the Contractor's firm hourly charge-out labour rate which includes overhead, consumables, and profit, plus net laid-down cost of materials to which will be added a mark-up of 10%, plus applicable taxes, of the total cost of material and labour. The firm hourly charge-out labour rate and the material mark-up will remain firm for the duration of the Contract and any subsequent amendments."

D2.1 Notwithstanding definitions or usage elsewhere in this document, or in the Contractor's Cost Management System, when negotiating hours for unscheduled work, PWGSC will consider only those hours of labour directly involved in the production of the subject work package.

Elements of Related Labour Costs identified in D2.2 below, will not be negotiated, but will be compensated for in accordance with D2.2.

D2.2 Allowance for Related Labour Costs such as: Management, all Supervision, Purchasing, and Material Handling, Quality Assurance and Reporting, Estimating, and Preparing Unscheduled Work Submissions will be included as Overhead for the purposes of determining the Charge-out Labour Rate entered in line B2 above.

Also include as Overhead the cost of vehicles, equipment, consumables, and tools required to be used during work at the dam site.

D2.3 The 10% mark-up rate for materials will also apply to subcontracted costs. The mark-up rate includes any allowance for material and subcontract management not allowed for in the Chargeout Labour Rate. The Contractor will not be entitled to a separate labour component for the purchase and handling of materials or subcontract administration.

D3 **Overtime**

The Contractor must not perform any overtime under the Contract unless authorized in advance and in writing by the Contracting Authority.

There will be no overtime payment for Known Work.

Requests for payment must be accompanied by a copy of the overtime authorization and a report containing the overtime performed pursuant to the written authorization.

Payment for authorized overtime will be calculated as follows:

For unscheduled work, the Contractor will be paid the authorized overtime hours at the quoted charge-out labour rate plus the following premium rates:

For Time and one half, an hourly rate of:	$_____	Applicable for working hours beyond 8 hours per day Monday through Friday and for all work done on a Saturday.
For Double time, an hourly rate of:	$_____	Applicable for all work done on Sundays and Statutory Holidays.

The above premiums will be calculated by taking the average hourly direct labour rate premiums, plus certified fringe benefit, plus profit on labour premium and fringe benefits.

These rates will remain firm for the duration of the Contract, including all amendments and are subject to audit if considered necessary by Canada.