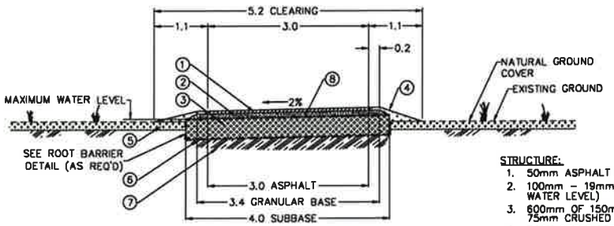

STRUCTURE:
1. 50mm ASPHALT MMCD FINE MIX
2. 100mm – 19mm GRANULAR BASE (ABOVE MAX WATER LEVEL)
3. 600mm OF 150mm OPEN GRADED SUBBASE OR 75mm CRUSHED GRANULAR SUBBASE
4. BACK DRESS WITH CLEARED BOG (MOSS) MATERIAL IN WETLAND OR SALVAGED ORGANIC MATERIAL ELSEWHERE
5. 200mm TO 450mm – TYPICAL DEPTH OF EXISTING BOG ORGANICS
6. HIGH SURVIVABILITY NON-WOVEN GEOTEXTILE PLUS BIAXIAL GEOGRID OR COMBINED GEOTEXTILE
7. UNDISTURBED NATIVE CLAY AND FINE SANDS
8. WOVEN GEOTEXTILE (TOP) OVER 150mm OPEN GRADED SUBBASE AS REQUIRED. (GEOTEXTILE NOT REQUIRED OVER 75mm OPEN GRADED SUBBASE)

WETLAND SECTION

NTS

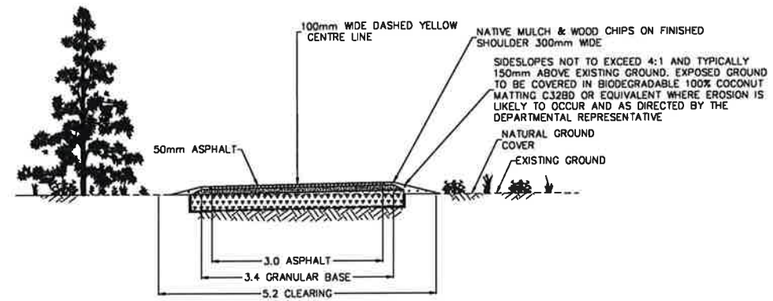

TYPICAL CROSS SECTION FINISHING DETAILS

NTS

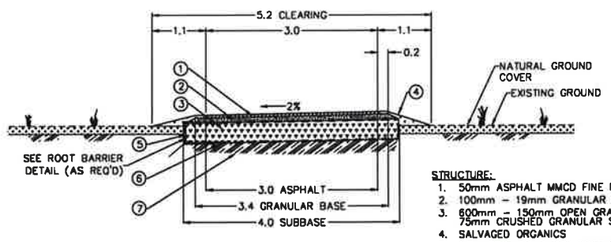

STRUCTURE:
1. 50mm ASPHALT MMCD FINE MIX
2. 100mm – 19mm GRANULAR BASE
3. 600mm – 150mm OPEN GRADED SUBBASE OR 75mm CRUSHED GRANULAR SUBBASE
4. SALVAGED ORGANICS
5. 1.5m WIDE 40mil PVC ROOT BARRIER AS REQUIRED
6. HIGH SURVIVIBILITY NON-WOVEN GEOTEXTILE PLUS BIAXIAL GEOGRID OR COMBINED GEOTEXTILE
7. UNDISTURBED NATIVE CLAY

CLAY SECTION

NTS

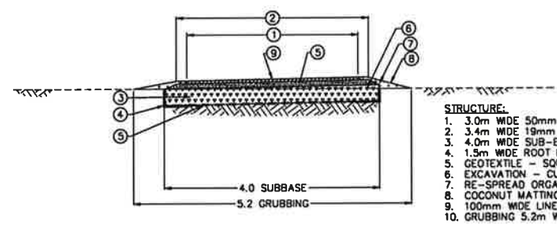

STRUCTURE:
1. 3.0m WIDE 50mm ASPHALT MMCD FINE MIX – SQUARE METRE
2. 3.4m WIDE 19mm GRANULAR BASE –SQUARE METRE
3. 4.0m WIDE SUB-BASE – SQUARE METRE
4. 1.5m WIDE ROOT BARRIER – LINEAR METRE
5. GEOTEXTILE – SQUARE METRE
6. EXCAVATION – CUBIC METRE
7. RE-SPREAD ORGANICS – LINEAR METRE EACH SIDE
8. COCONUT MATTING – CUT TO WIDTH OF SHOULDER – SQUARE METRE
9. 100mm WIDE LINE – LINEAR METRE
10. GRUBBING 5.2m WIDE – HECTARE

TYPICAL CROSS SECTION FOR PAY ITEMS

NTS

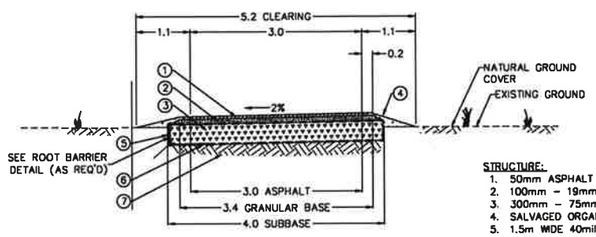

STRUCTURE:
1. 50mm ASPHALT MMCD FINE MIX
2. 100mm – 19mm GRANULAR BASE
3. 300mm – 75mm CRUSHED GRANULAR SUBBASE
4. SALVAGED ORGANICS
5. 1.5m WIDE 40mil PVC ROOT BARRIER AS REQUIRED
6. HIGH SURVIVIBILITY WOVEN GEOTEXTILE
7. UNDISTURBED SUB-GRADE

STANDARD SECTION

NTS

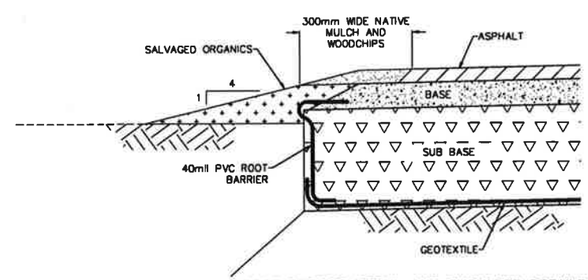

ROOT BARRIER DETAIL AND SHOULDER DETAILS

NTS

NOTE:
1. 2% CROSS FALL ON TRAIL IN SAME DIRECTION AS NATURAL GROUND SLOPES UNLESS DIRECTED OTHERWISE BY DEPARTMENTAL REPRESENTATIVE.
2. "WETLAND" SECTION ALIGNS WITH FINAL GEOTECHNICAL SITE ASSESSMENT REPORT – PHASE 3, PACIFIC TRAVERSE TRAIL, PACIFIC RIM NATIONAL PARK RESERVE, VANCOUVER ISLAND, BC. BY WOOD PLC. DATED DECEMBER 2018, TABLE 6 – CASE II, FOR SOFT TO VERY SOFT CLAY SUBGRADE.
3. "CLAY" SECTION ALIGNS WITH FINAL GEOTECHNICAL SITE ASSESSMENT REPORT – TABLE 5 – CASE I, FOR FIRM TO STIFF CLAY SUBGRADE.
4. "STANDARD" SECTION ALIGNS WITH FINAL GEOTECHNICAL SITE ASSESSMENT REPORT – TABLE 7 – CASE III, FOR WELL DRAINED, SAND AND GRAVEL SUBGRADE.

PROFESSIONAL PROVINCE OF D. G. CHALMERS BRITISH COLUMBIA ENGINEER

DEC 18 2018

Parks Canada Agency / L'Agence Parcs Canada

PARSONS

KEY PLAN
N.T.S.

–	----	----
–	----	----
3	ISSUED FOR TENDER	18/12/2018
2	ISSUED FOR TENDER	30/11/2018
1	ISSUED FOR TENDER	18/12/2017
0	ISSUED FOR TENDER	21/11/2017
Revision/ Révision	Description/Description	Date/Date

Client/client

Parks Canada Agency / L'Agence Parcs Canada
Western and Northern Region / Ouest et Nord du Canada

Project title/Titre du projet
TOFINO
PACIFIC RIM NATIONAL PARK RESERVE
?apsclik tas'li (Ups-cheek ta-shee) "Going in the right direction on the trail"

Consultant Signature Only

Designed by/Concept par
DON CHALMERS / 2016-11

Drawn by/Dessiné par
DAVID COX / 2016-11

PCA Project Manager/Gestionnaire Administrateur de Projets APC
JACKIE HICKS

Drawing title/Titre du dessin
?apsclik tas'li (Ups-cheek ta-shee) "Going in the right direction on the trail"
TRAIL DESIGN

TYPICAL CROSS SECTIONS

Project title/Titre du projet	Sheet/Feuille	Revision no./ La Révision no.
PCA #1522	T-40.1 OF	3

PWGSC – A1 – 841X594

NOTE:
1. MAX. EXPOSED HEIGHT OF WALL 1.2m FOR DRY STACKED WALL.
2. TOE EMBEDMENT OF 0.3m.
3. FACE BATTER OF 1:4
4. ROCK SIZE MIXTURE OF 0.15m DIA TO 0.45m DIA.

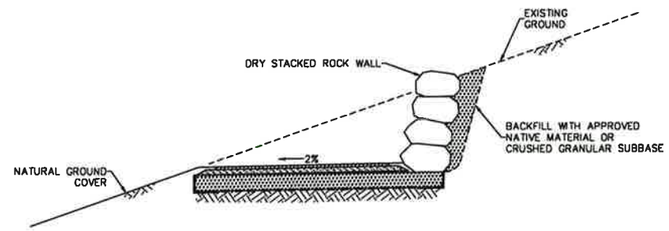

TYPICAL CROSS SECTION IN CUT AREAS

NTS

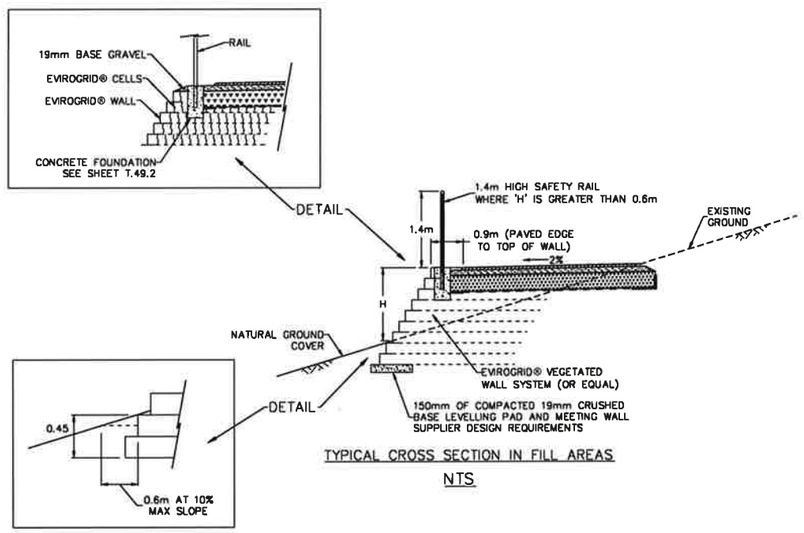

TYPICAL CROSS SECTION IN FILL AREAS

NTS

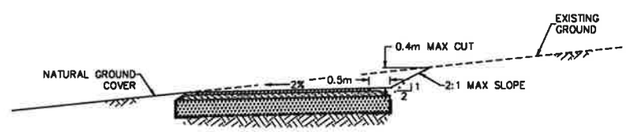

TYPICAL CROSS SECTION IN SHALLOW CUT AREAS

NTS

NOTE:
1. MINOR WALL LOCATIONS ARE AS DIRECTED BY DEPARTMENTAL REPRESENTATIVE

Parks Canada Agency / L'Agence Parcs Canada

PARSONS

KEY PLAN
N.T.S.

Revision/Révision	Description/Description	Date/Date
-	----	----
-	----	----
-	----	----
2	ISSUED FOR TENDER	18/12/2018
1	ISSUED FOR TENDER	30/11/2017
0	ISSUED FOR TENDER	27/10/2017

Client/client

Parks Canada Agency / L'Agence Parcs Canada

Western and Northern Region / Ouest et Nord du Canada

Project title/Titre du projet

TOFINO

PACIFIC RIM NATIONAL PARK RESERVE
?apsčlik tasìl
(Ups-cheek ta-shee)
"Going in the right direction on the trail"

Consultant Signature Only

Designed by/Concept par
DON CHALMERS / 2016-11

Drawn by/Dessiné par
DAVID COX / 2016-11

PCA Project Manager/Technical Authority
Administrateur de Projets APC
JACKIE HICKS

Drawing title/Titre du dessin

?apsčlik tasìl (Ups-cheek ta-shee) "Going in the right direction on the trail"
TRAIL DESIGN

MINOR RETAINING WALLS

Project No./No. du projet	Sheet/Feuille	Revision no./Le Révision no.
PCA #1522	T-40.2 OF	2

PROFESSIONAL ENGINEER PROVINCE OF BRITISH COLUMBIA D. G. CHALMERS

DEC 18 2018

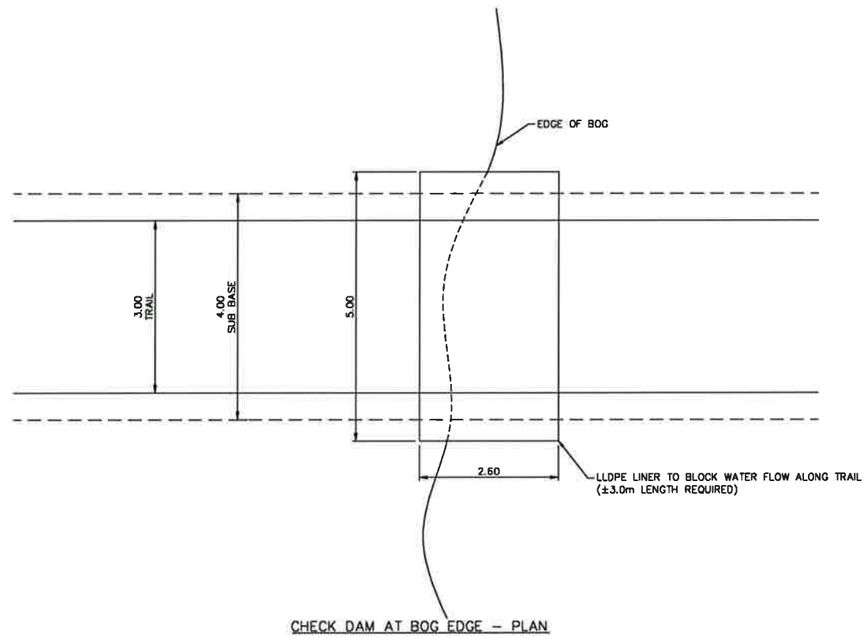

CHECK DAM AT BOG EDGE – PLAN
SCALE
1:50

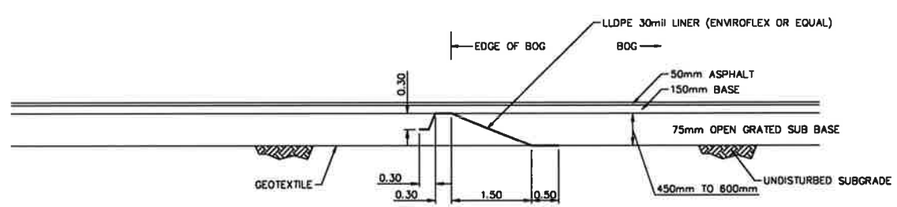

CHECK DAM AT BOG EDGE – ELEVATION
SCALE
1:50

NOTES:
1. DETAIL TO BE PROVIDED AT EACH BOG AREA AS DIRECTED BY THE DEPARTMENTAL REPRESENTATIVE OR OWNERS ENVIRONMENTAL MONITOR.
2. SUBGRADE MUST NOT BE EXCAVATED BELOW TOP OF EXISTING NON-ORGANIC MATERIALS ON EDGES OF BOG EXCEPT WITH THE APPROVAL OF THE DEPARTMENTAL REPRESENTATIVE OR OWNERS ENVIRONMENTAL MONITOR.

PROFESSIONAL PROVINCE OF BRITISH COLUMBIA D. G. CHALMERS

DEC 18 2018

Parks Canada Agency / L'Agence Parcs Canada

PARSONS

KEY PLAN
N.T.S.

Revision / Révision	Description/Description	Date/Date
-	----	----
-	----	----
-	----	----
2	ISSUED FOR TENDER	18/12/2018
1	ISSUED FOR TENDER	09/11/2018
0	ISSUED FOR TENDER	27/10/2017

Client/client

Parks Canada Agency / L'Agence Parcs Canada

Western and Northern Region / Ouest et Nord du Canada

Project title/Titre du projet
TOFINO

PACIFIC RIM NATIONAL PARK RESERVE
?apsčiik ťasÌi
(Ups-cheek ta-shee)
"Going in the right direction on the trail"

Consultant Signature Only

Designed by/Concept par
DON CHALMERS / 2016-11

Drawn by/Dessiné par
DAVID COX / 2016-11

PCA Project Manager/Technical Authority
Administrateur du Projets APC
JACKIE HICKS

Drawing title/Titre du dessin
?apsčiik ťasÌi (Ups-cheek ta-shee) "Going in the right direction on the trail"
TRAIL DESIGN

TYPICAL SECTIONS
EDGE BOG CHECK DAM

Project No./No. du projet	Sheet/Feuille	Revision no./La Révision no.
PCA #1522	T-41 OF	2

PRCSC – A1 – 841X594

Pacific Traverse Trail
Roadside Treatments, Barriers, and Clearing

Highway Stationing	Typical Cross section Type	Length (Metres)	Roadside Barriers			Clearing (Measured from Edge Pavement)	Elevation Difference Trail to Road (+ Trail Higher)	Engineering Comments	Environmental Comments
			Existing	Proposed	Barrier Type				
North Park Boundary									
H21+710 to H21+720	Fill Slope With Wall	10	Yes	Keep Exist.	Concrete (Existing)	7.0	Match	Match into Tofino Trail	Ditch breeding site east side 21+700
H21+170 to H21+360	Forest Side With Ditch	190	No	No		10.0	0.6		
Radar Hill Road									
H20+690 to H20+750	Fill Slope With Wall	60	Yes	Keep Exist.	Concrete (Existing)	10.0	1.5	Refer to Site "A" Wall/Slope	
H19+360 to H19+470	Fill Slope Culvert Headwall	110	Yes	Keep Exist.	Concrete (Existing)	14.5	3.0	Refer to Site "B" Wall/Slope	
Nuu-Piit-Taah-Chiith Road North									
H18+171 to H18+226	Roadside With Shallow to No Ditch	55	No	Yes	Concrete with steel safety Rail	8.0	Match		Old Ditch breeding site west side 18+230 (May disappear with new work)
H18+026	Roadside Barrier Start Flare		No	Yes	Terminate Barrier	8.0	0.3		
H17+840 to H17+980	Roadside With Ditch	210	No	Yes	W-beam guardrail with steel safety rail	10.0	Match		Amphibian area and larger mammals
H17+820	Roadside Barrier End Flare		No	Yes	Terminate Barrier	8.0	0.5		
H17+093	Roadside Barrier Start Flare	13	No	Yes	Terminate Barrier	9.0	-1.2		
H17+040 to H17+080	Fill Slope Without Wall	40	No	Yes	Concrete Barrier	13.0	2.3	Refer to Site "C" Wall/Slope	RL Frog crossing area 17+040 to 17+080
H17+030	Roadside Barrier End Flare	10	No	Yes	Concrete Barrier	15.0	1		
Nuu-Piit-Taah-Chiith Road South									
H16+800 to H16+860	Forest Side With Ditch	60	No	No		13.0	-0.3		
H16+170 to H16+730	On Highway	560	No	Yes	Concrete with steel safety Rail	Clearing east side	Match	Trail uses Highway surface	Ditch breeding site east side 16+230
H16+300 to H16+360	On Highway	60*	Relocate	Yes	Concrete with steel safety Rail	Clearing east side	Match	Trail uses Highway surface	
H16+450 to H16+ 538 (East Side)	Barrier above Wall on east side of Highway 4		No	Yes	Concrete with steel safety Rail	N/A	N/A	East side of Hwy # 4	
End of Esowista Lands		*This 60 m is also included in the above 560 m.							
H16+060 to H16+160	Roadside No Ditch	100	No	Yes	Concrete with steel safety Rail	8.0	Match		
H15+850 to H15+870	Forest Side No Ditch	20	No		Concrete with steel safety Rail	11.0	2.5		Ditch breeding site east side 15+870
H15+660 to H15+680	Forest Side No Ditch	20	No			11.0	1.6		
H15+460 to H15+570	Roadside No Ditch	110	No	Yes	Concrete with steel safety Rail	8.0	Match		
Incinerator Road Parking Lot									
H15+200 to H15+370	Adjacent to Parking Lot	170	No	No					
H15+040 to H15+180	Roadside With Ditch		No	No		10-12			Ditch breeding site both sides 15+000
Long Beach Parking Lot									
H13+850 to H13+900	Forest Side With Ditch	50	No	No		10.2			
H13+220 to 13+520	Forest Side Without Ditch	300	No	No		10.2			
H11+240 to H13+900	Forest Side With Ditch	50	No	No		10.2			
Green Point Campground Area									
H11+940 to H12+000	Forest Side With Ditch	60	No	No		11.7	-0.8		Wetlands
H11+840 to H11+940	Forest Side Without Ditch	100	No	No		11.7	0.1	Wetlands	Wetlands
H11+240 to H12+900	Forest Side With Ditch	1660	No	No		11.0	Varies		
Green Point Campground Road									
H10+115 to H10+225	Forest Side With Ditch	110	No	No		10.2	-0.3	Wetlands	Ditch breeding site both sides H10+150 RL Frog crossing area H10+200 to H10+400
Nav Can Area									
H9+540 to H9+900	Forest Side With Ditch	360	No	No		10.2	-0.6	Existing drainage ditch to be narrowed to reduce impacts to wetlands	Full length of NavCan site is a Red Legged Frog breeding area and crossing area and wetlands
Combers Beach Parking Lot									
H9+427	Roadside Barrier Start Flare	25	No	Yes	Concrete with steel safety rail. Provide additional low barriers for large mammal crossings	14.4	Match	End Approach Flare	Large Mammal crossings
H9+415	Roadside With Ditch		No	Yes		11.0	Match	Start Approach Flare	
H9+375 to H9+402	Roadside With Shallow to No Ditch	27	No	Yes		11.0	Match	Concrete barrier parallel to highway	
H9+375	Roadside With Shallow to No Ditch		No	Yes		11.0	Match	End Opposing Flare, Barrier parallel to Highway	
H9+343.8	Roadside Barrier End Flare	31.2	No	Yes		12.8	Match	Start Barrier, Opposing Flare	
H9+331.8	Roadside End Flare	12	No	No		4.0	Match	Start of asphalt taper	
H9+090 to H9+110	Forest Side With Ditch	20	No	No		10.0	-1.4		Wetlands
H8+310 to H8+460	Fill Slope With Wall	150	Yes	No	Concrete (Existing)			Refer to Site "I" wall/slope	
H8+090 to H8+190	Forest Side With Ditch	100	No	No		10.0	-0.8		Amphibian Habitat

NOTES:
1. EDGE OF TRAIL MEASURED FROM EDGE OF EXISTING HIGHWAY

PROFESSIONAL ENGINEER PROVINCE OF BRITISH COLUMBIA D. G. CHALMERS
DEC 18 2018

Parks Canada Agency / L'Agence Parcs Canada

PARSONS

KEY PLAN
N.T.S.

Revision/Revision	Description/Description	Date/Date
-	----	----
-	----	----
-	----	----
2	ISSUED FOR TENDER	18/12/2018
1	ISSUED FOR TENDER	09/11/2018
0	ISSUED FOR TENDER	27/10/2017

Client/client
Parks Canada Agency / L'Agence Parcs Canada
Western and Northern Region / Ouest et Nord du Canada

Project title/Titre du projet
TOFINO
PACIFIC RIM NATIONAL PARK RESERVE
ʔapsčiik fasii
(Ups-cheek ta-shee)
"Going in the right direction on the trail"

Consultant Signature Only

Designed by/Concept par: DON CHALMERS / 2016-11
Drawn by/Dessiné par: DAVID COX / 2016-11
PCA Project Manager/Technical Authority / Administrateur de Projets APC: JACKIE HICKS

Drawing title/Titre du dessin
ʔapsčiik fasii (Ups-cheek ta-shee) "Going in the right direction on the trail"
TRAIL DESIGN

ROADSIDE TREATMENTS AND BARRIERS TABLE 1

Project No./No. du projet	Sheet/Feuille	Revision no./Le Révision no.
PCA #1522	T-42.1 OF	2

PWGSC – A1 – 841X594

Pacific Traverse Trail
Roadside Treatments, Barriers, and Clearing

Highway Stationing	Typical Cross section Type	Length (Metres)	Roadside Barriers			Clearing (Measured from Edge Pavement)	Elevation Difference Trail to Road (+ Trail Higher)	Engineering Comments	Environmental Comments Yellow signifies a high priority area
			Existing	Proposed	Barrier Type				
Rainforest Trail Walk Parking Lot									
H7+771.4	Roadside Barrier Start Asph. Taper	20	No	No		4.0	Match	End of asphalt taper. Trail in forest	Critical Amphibian Habitat Area
H7+751.4	Roadside Barrier Start Flare	51.2	No	Yes	Concrete with steel safety Rail	14.4	Match	End Approach Flare. End of Barrier	Critical Amphibian Habitat Area
H7+700.2	Roadside With Ditch		No	Yes	Concrete with steel safety Rail	8.5	Match	Start Approach Flare	Critical Amphibian Habitat Area
H7+575.2 to H7+700.2	Roadside With Ditch	125	No	Yes	Concrete with steel safety Rail	8.5	Match	Concrete barrier parallel to highway	Ditch breeding site west side 7+680
H7+595.2	Roadside With Ditch		No	Yes	Concrete with steel safety Rail	8.5	Match	End Opposing Flare. Barrier parallel to Highway Pond Avoidance	Critical Amphibian Habitat Area
H7+564	Roadside Barrier End Flare	31.2	No	Yes	Concrete with steel safety Rail	12.8	Match	Start Barrier. Opposing Flare Pond Avoidance	Critical Amphibian Habitat Area
H7+552	Roadside Barrier End Asph. Taper	12	No	No		4.0	Match	Start of asphalt taper Pond Avoidance	Critical Amphibian Habitat Area
H7+310 to H7+552	Forest Side With Ditch	242	No	No		10	-0.1	Amphibian Habitat. Consider avoidance of large trees at corner	Ditch breeding site west side 7+310 to 7+552
H6+590 to H6+810	Forest Side Without Ditch	220	No	No		9.2	0.1		RL Frog ditch breeding site east side 6+180 to 6+200
H6+180 to H6+350	Forest Side With Ditch	170	No	No		9.2	-1		RL Frog ditch breeding site east side 6+180 to 6+200
H5+785 to H5+865	Forest Side With Ditch	85	No	No		8.5	-0.6		Ditch breeding site east side 5+800 to 5+880
H5+390 to H5+450	Forest Side With Ditch	60	No	No		9.5	-0.6		Ditch breeding site both sides 5+390 to 5+450
H4+580 to H4+700	Fill Slope With Wall	120	Yes	No	Concrete (Existing)			Refer to Site "J" Wall/Slope	
Wick Road									
H3+675	Forest Side With Ditch	400	No	No		11.2	-1.3		
H3+585	Forest Side With Ditch		No	No		10.7	-0.5		
H3+510	Forest Side With Ditch		No	No		10.7	-0.3		
H3+430	Forest Side With Ditch		No	No		10.7	-0.1		
H3+335	Forest Side With Ditch		No	No		10.7	-1.1		
H3+300 to H3+730	Forest Side With Ditch	430	No	No		10.7	-0.1 to -1.3		
H1+510 to H1+540	Lost Shoe Creek Bridge	30	No	No		14.0		Bridge Work Area	
H1+470 to H1+510	Lost Shoe Creek Bridge	40	No	No		Bridge		Creek Gully	
H1+440 to H1+470	Lost Shoe Creek Bridge	30	No	No		14.0		Bridge Work Area	
H0+222.4	Roadside With Ditch	20	No	No	W-beam guardrail with safety railing. Amphibian barriers on both sides of the highway and 3 amphibian crossing culverts proposed	4.0	Match	End of asphalt taper. Trail in forest	Red Legged Frog crossing area
H0+202.4	Roadside With Ditch	51.2	No	Yes		14.4	Match	End Approach Flare. End of Barrier	
H0+151.2	Roadside With Ditch		No	Yes		8.5	Match	Start Approach Flare	
H0+041.2 to H0+151.2	Roadside With Ditch	110	No	Yes		8.5	Match	W-beam barrier parallel to highway	
H0+041.2	Roadside With Ditch		No	Yes		8.5	Match	End Opposing Flare	
H0+010	Roadside With Ditch	31.2	No	Yes		12.8	Match	Start Barrier. Opposing Flare	
H0+002	Roadside With Ditch	12	No	No		4.0	Match	Start of asphalt taper	
South Park Boundary								Match to Ucluelet Trail	
Wick Road Alignment									
W0+020 to W0+310	Tight to Wick Road	290	No	Yes	Concrete		Match	Not in Contract	
W0+310 to W1+700	Forest Side of Power Poles	1390	No	No		8	-0.2	3 m off road	
W1+700 to W1+900	Roadside with ditch	200	No	Yes	W-Beam Guardrail	8	Match		
W2+707 to W3+010	Forest Side of Drainage Ditch	303	No	No		10	-0.2		

NOTES:
1. EDGE OF TRAIL MEASURED FROM EDGE OF EXISTING HIGHWAY

PROFESSIONAL PROVINCE OF BRITISH COLUMBIA D. G. CHALMERS
DEC 18 2018

Parks Canada Agency / L'Agence Parcs Canada

PARSONS

KEY PLAN
N.T.S.

Revision/Révision	Description/Description	Date/Date
-	----	----
-	----	----
-	----	----
2	ISSUED FOR TENDER	18/12/2018
1	ISSUED FOR TENDER	08/11/2018
0	ISSUED FOR TENDER	27/10/2017

Client/client
Parks Canada Agency / L'Agence Parcs Canada
Western and Northern Region / Ouest et Nord du Canada

Project title/Titre du projet
TOFINO
PACIFIC RIM NATIONAL PARK RESERVE
?apsčiik tasii
(Ups-cheek ta-shee)
"Going in the right direction on the trail"

Consultant Signature Only

Designed by/Concept par
DON CHALMERS / 2016-11

Drawn by/Dessiné par
DAVID COX / 2016-11

PCA Project Manager/Gestionnaire Autorité Administrateur de Projets APC
JACKIE HICKS

Drawing title/Titre du dessin
?apsčiik tasii (Ups-cheek ta-shee)
"Going in the right direction on the trail"
TRAIL DESIGN

ROADSIDE TREATMENTS AND BARRIERS TABLE 2

Project No./No. du projet	Sheet/Feuille	Revision no./La Révision no.
PCA #1522	T-42.2 OF	2

PWGSC – A1 – 841X594

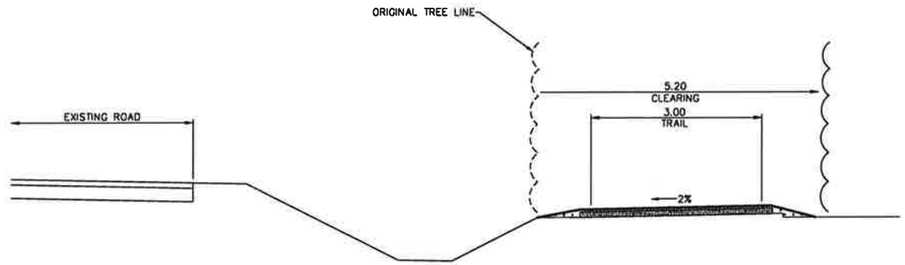

FOREST SIDE WITH DITCH

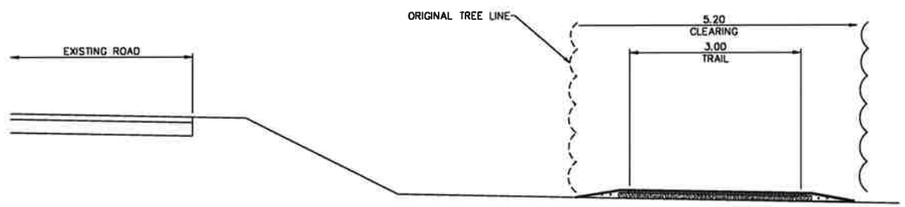

FOREST SIDE, NO DRAINAGE DITCH

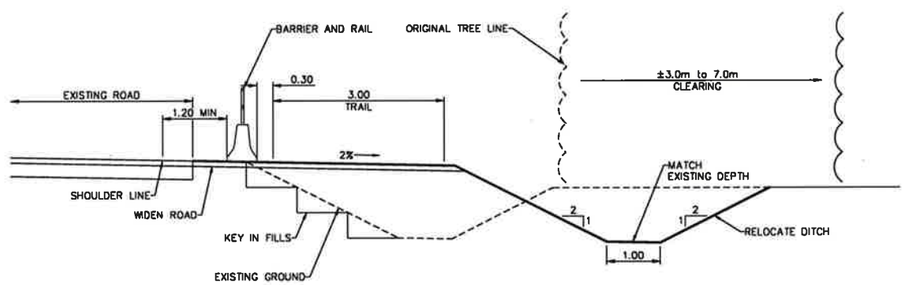

ROADSIDE WITH DITCH

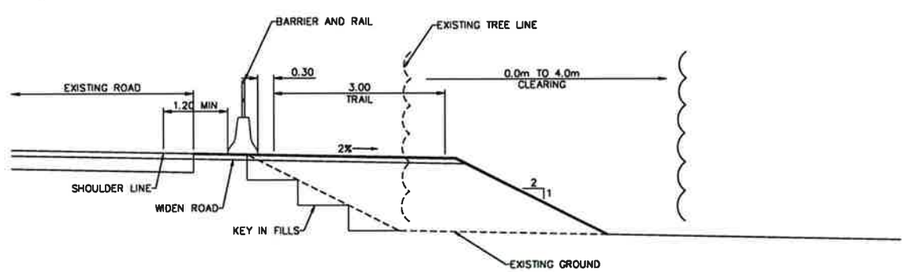

ROADSIDE, NO DITCH

NOTES:
1. SECTIONS OF TRAIL NOT CLEARED BY PREVIOUS CONTRACT SHALL BE CLEARED UNDER THIS CONTRACT

PROFESSIONAL PROVINCE OF BRITISH COLUMBIA D. G. CHALMERS

DEC 18 2018

Parks Canada Agency / L'Agence Parcs Canada

PARSONS

KEY PLAN
N.T.S.

Revision/Révision	Description/Description	Date/Date
-	----	----
-	----	----
-	----	----
2	ISSUED FOR TENDER	18/12/2018
1	ISSUED FOR TENDER	09/11/2018
0	ISSUED FOR TENDER	27/10/2017

Client/client

Parks Canada Agency / L'Agence Parcs Canada

Western and Northern Region / Ouest et Nord du Canada

Project title/Titre du projet
TOFINO
PACIFIC RIM NATIONAL PARK RESERVE
?apsčik tasʼil (Ups-cheek ta-shee) "Going in the right direction on the trail"

Consultant Signature Only

Designed by/Concept par
DON CHALMERS / 2016-11

Drawn by/Dessiné par
DAVID COX / 2016-11

PCA Project Manager/Technical Authority
Administrateur de Projets APC
JACKIE HICKS

Drawing title/Titre du dessin
?apsčik tasʼil (Ups-cheek ta-shee) "Going in the right direction on the trail"
TRAIL DESIGN

TYPICAL SECTIONS ALONG HIGHWAY 4 SHEET 1

Project No./No. du projet	Sheet/Feuille	Revision no./Le révision no.
PCA #1522	T-43 OF	2

PWGSC – A1 – 841X594

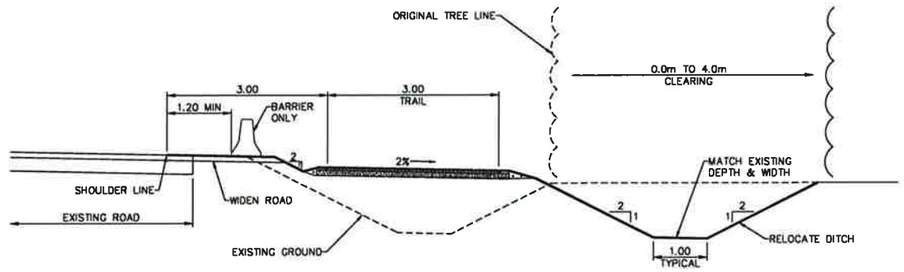

SEPARATED PLUS DITCH

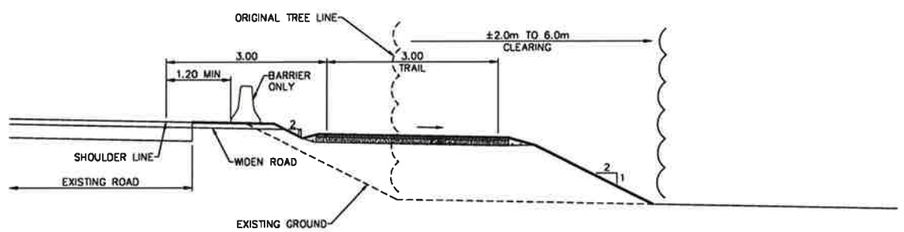

SEPARATED NO DITCH

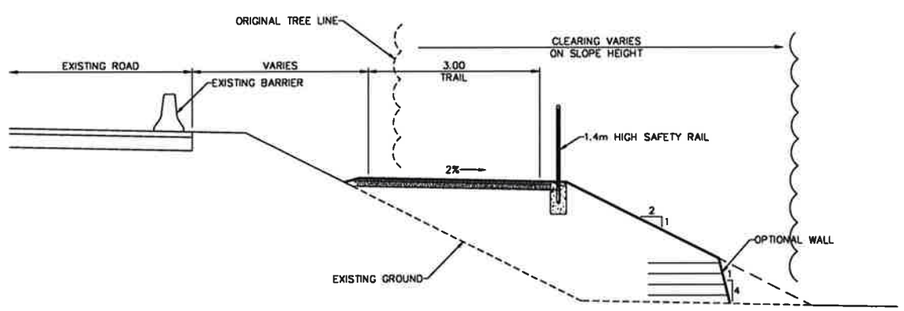

FILL SLOPE TRAIL

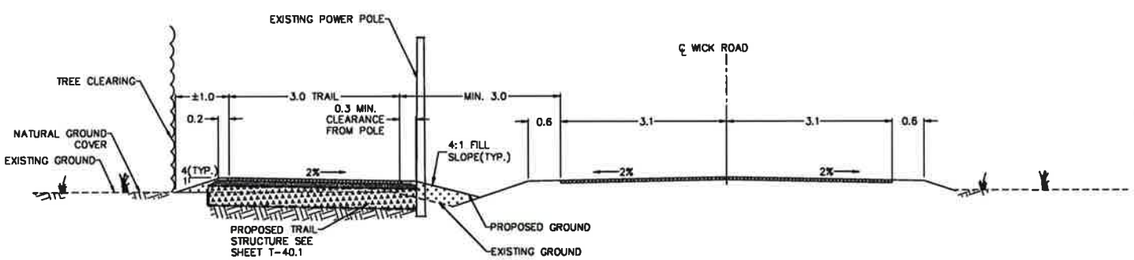

WICK ROAD TRAIL
TYPICAL CROSS
SECTION

NOTES:
1. SECTIONS OF TRAIL NOT CLEARED BY PREVIOUS CONTRACT SHALL BE CLEARED UNDER THIS CONTRACT

PROFESSIONAL PROVINCE OF D. G. CHALMERS BRITISH COLUMBIA ENGINEER

DEC 18 2018

Parks Canada Agency / L'Agence Parcs Canada

PARSONS

KEY PLAN
N.T.S.

Revision/ Revision	Description/Description	Date/Date
-	----	----
-	----	----
-	----	----
2	ISSUED FOR TENDER	18/12/2018
1	ISSUED FOR TENDER	08/11/2018
0	ISSUED FOR TENDER	27/10/2011

Client/client

Parks Canada Agency / L'Agence Parcs Canada

Western and Northern Region / Ouest et Nord du Canada

Project title/Titre du projet
TOFINO
PACIFIC RIM NATIONAL PARK RESERVE
?apsčik tasli
(Ups-cheek ta-shee)
"Going in the right direction on the trail"

Consultant Signature Only

Designed by/Concept par
DON CHALMERS / 2016-11

Drawn by/Dessiné par
DAVID COX / 2016-11

PCA Project Manager/Gestionnaire Autorisé Administrateur de Projets APC
JACKIE HICKS

Drawing title/Titre du dessin
?apsčik tasli (Ups-cheek ta-shee) "Going in the right direction on the trail"
TRAIL DESIGN

TYPICAL SECTIONS ALONG HIGHWAY 4
SHEET 2

Project No./No. du projet	Sheet/ Feuille	Revision no./ La Révision no.
PCA #1522	T-44 OF	2

G:\TFA\40321 - PACIFIC RIM NPR\ACTIVE TRAILS\WICK\40321-FT1-SHEETS T-41-44.DWG PLOTTED ON 2018/12/13 3:11pm BY POSSSBC

PWCSC - A1 - 841X594

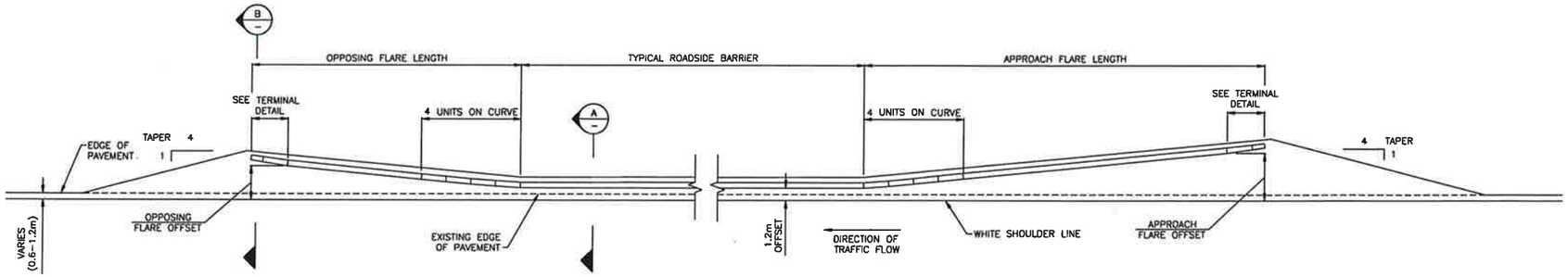

CONCRETE BARRIER FLARE
1:250

ROADSIDE BARRIERS DIMENSIONS FOR FLARES										
POSTED SPEED	APPROACH FLARE					OPPOSING FLARE.				
	LENGTH	OFFSET	NUMBER OF BARRIER SECTIONS			LENGTH	OFFSET	NUMBER OF BARRIER SECTIONS		
km/hr	metres	metres	STANDARD	TAPERED	NOSE	metres	metres	STANDARD	TAPERED	NOSE
80	51.2	4.9	19	1	1	31.2	3.3	11	1	1
70	46.2	4.8	17	1	1	26.2	3.2	9	1	1
50	31.2	4.7	11	1	1	18.7	3.1	6	1	1

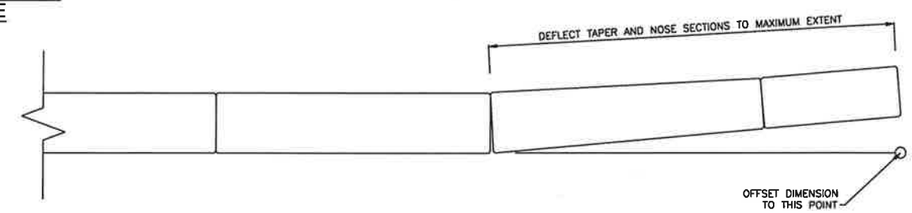

TERMINAL DETAIL
1:25

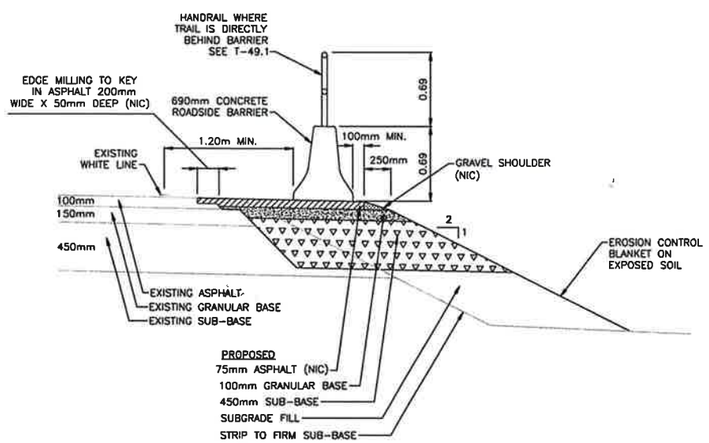

SECTION A-A
1:25

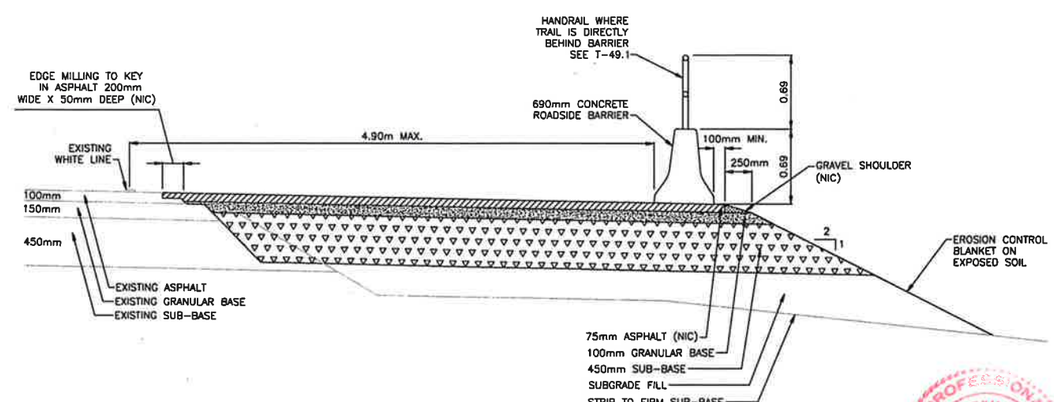

SECTION B-B
1:25

NOTE:
1. ASPHALT PAVING AND EDGE MILLING NOT IN CONTRACT.
2. SET BARRIERS ON GRAVEL BASE.

PROFESSIONAL PROVINCE OF D. G. CHALMERS BRITISH COLUMBIA ENGINEER
DEC 18 2018

Parks Canada Agency / L'Agence Parcs Canada

PARSONS

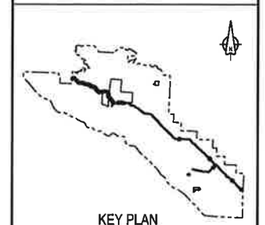

KEY PLAN
N.T.S.

Revision/Révision	Description/Description	Date/Date
-	----	----
-	----	----
-	----	----
-	----	----
1	ISSUED FOR TENDER	18/12/2018
0	ISSUED FOR TENDER	27/10/2017

Client/client

Parks Canada Agency / L'Agence Parcs Canada
Western and Northern Region / Ouest et Nord du Canada

Project title/Titre du projet
TOFINO
PACIFIC RIM NATIONAL PARK RESERVE
ʔapsčiik tasii
(Ups-cheek ta-shee)
"Going in the right direction on the trail"

Consultant Signature Only

Designed by/Conçu par
DON CHALMERS / 2016-11

Drawn by/Dessiné par
DAVID COX / 2016-11

PCA Project Manager/Technical Authority
Administrateur de Projets APC
JACKIE HICKS

Drawing title/Titre du dessin
ʔapsčiik tasii (Ups-cheek ta-shee)
"Going in the right direction on the trail"
TRAIL DESIGN

TYPICAL BARRIERS

Project No./No. du projet	Sheet/Feuille	Revision no./La révision no.
PCA #1522	T-46 OF	1

PNCSC – A1 – 841X594

PRECAST CONCRETE BULL–NOSE 460 mm – CBN–H & CBN–E — SP941–01.01.01

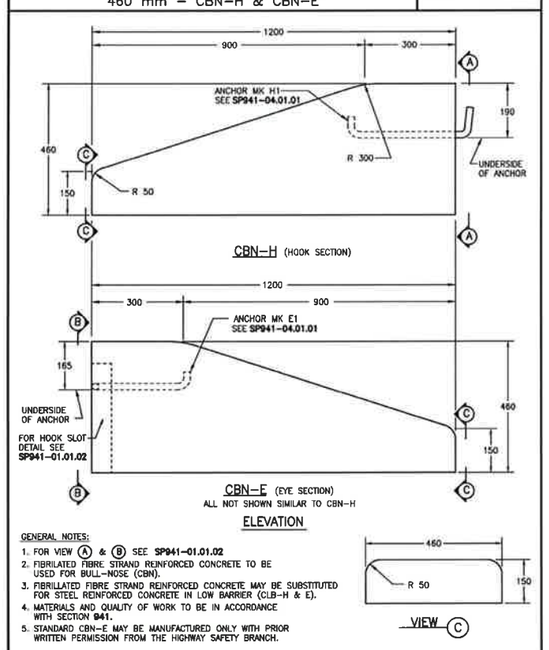

GENERAL NOTES:
1. FOR VIEW (A) & (B) SEE **SP941–01.01.02**
2. FIBRILATED FIBRE STRAND REINFORCED CONCRETE TO BE USED FOR BULL–NOSE (CBN).
3. FIBRILATED FIBRE STRAND REINFORCED CONCRETE MAY BE SUBSTITUTED FOR STEEL REINFORCED CONCRETE IN LOW BARRIER (CLB–H & E).
4. MATERIALS AND QUALITY OF WORK TO BE IN ACCORDANCE WITH SECTION **941**.
5. STANDARD CBN–E MAY BE MANUFACTURED ONLY WITH PRIOR WRITTEN PERMISSION FROM THE HIGHWAY SAFETY BRANCH.

NOT TO SCALE — ALL DIMENSIONS ARE IN MILLIMETRES UNLESS OTHERWISE NOTED

PRECAST CONCRETE LOW BARRIER 460 mm – CLB–E+H — SP941–01.01.02

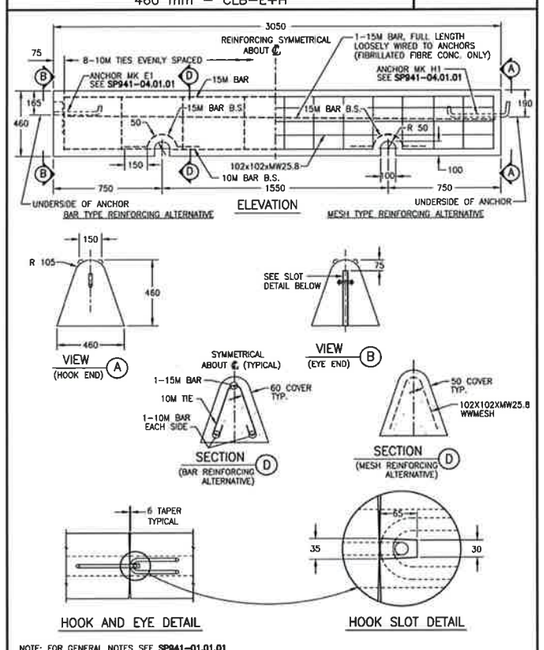

NOTE: FOR GENERAL NOTES SEE **SP941–01.01.01**

NOT TO SCALE — ALL DIMENSIONS ARE IN MILLIMETRES UNLESS OTHERWISE NOTED

PRECAST CONCRETE ROADSIDE BARRIER 690 mm – CRB–H — SP941–01.02.01

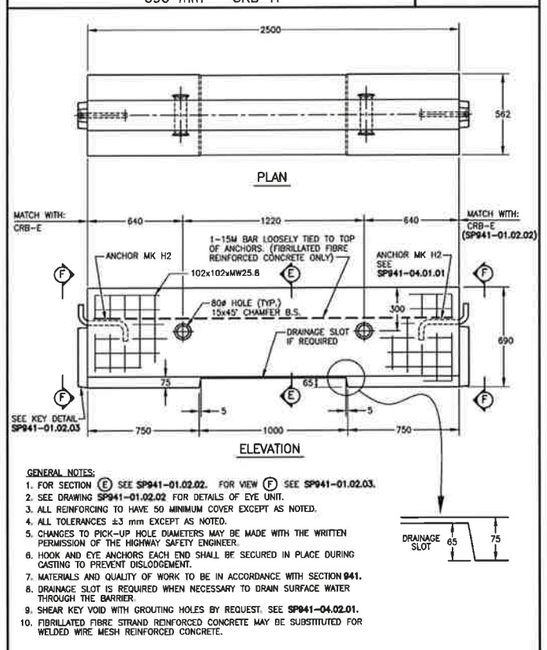

GENERAL NOTES:
1. FOR SECTION (E) SEE **SP941–01.02.02**. FOR VIEW (F) SEE **SP941–01.02.03**.
2. SEE DRAWING **SP941–01.02.02** FOR DETAILS OF EYE UNIT.
3. ALL REINFORCING TO HAVE 50 MINIMUM COVER EXCEPT AS NOTED.
4. ALL TOLERANCES ±3 mm EXCEPT AS NOTED.
5. CHANGES TO PICK–UP HOLE DIAMETERS MAY BE MADE WITH THE WRITTEN PERMISSION OF THE HIGHWAY SAFETY ENGINEER.
6. HOOK AND EYE ANCHORS EACH END SHALL BE SECURED IN PLACE DURING CASTING TO PREVENT DISLODGEMENT.
7. MATERIALS AND QUALITY OF WORK TO BE IN ACCORDANCE WITH SECTION **941**.
8. DRAINAGE SLOT IS REQUIRED WHEN NECESSARY TO DRAIN SURFACE WATER THROUGH THE BARRIER.
9. SHEAR KEY VOID WITH GROUTING HOLES BY REQUEST. SEE **SP941–04.02.01**.
10. FIBRILLATED FIBRE STRAND REINFORCED CONCRETE MAY BE SUBSTITUTED FOR WELDED WIRE MESH REINFORCED CONCRETE.

NOT TO SCALE — ALL DIMENSIONS ARE IN MILLIMETRES UNLESS OTHERWISE NOTED

PROFESSIONAL — PROVINCE OF BRITISH COLUMBIA — D. G. CHALMERS — DEC 18 2018

NOTE: ALL BARRIERS SHALL HAVE DRAIN SLOTS OR BE DRAINAGE BARRIERS

Parks Canada Agency / L'Agence Parcs Canada

PARSONS

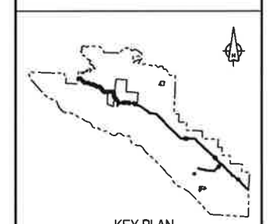

KEY PLAN
N.T.S.

Revision/Révision	Description/Description	Date/Date
-	----	----
-	----	----
-	----	----
-	----	----
1	ISSUED FOR TENDER	18/12/2018
0	ISSUED FOR TENDER	27/10/2017

Client/client

Parks Canada Agency / L'Agence Parcs Canada

Western and Northern Region / Ouest et Nord du Canada

Project title/Titre du projet
TOFINO
PACIFIC RIM NATIONAL PARK RESERVE
?apsčik tasli
(Ups-cheek ta-shee)
"Going in the right direction on the trail"

Consultant Signature Only

Designed by/Concept par: DON CHALMERS / 2016-11

Drawn by/Dessiné par: DAVID COX / 2016-11

PCA Project Manager/Technical Authority / Administrateur de Projets APC: JACKIE HICKS

Drawing title/Titre du dessin
?apsčik tasli (Ups-cheek ta-shee) "Going in the right direction on the trail"
TRAIL DESIGN

BARRIER DETAILS 1

Project No./No. du projet	Sheet/Feuille	Revision no./La Révision no.
PCA #1522	T-47 OF	1

PWGSC – A1 – 841X364

PRECAST CONCRETE ROADSIDE BARRIER 690 mm – CRB–E

SP941–01.02.02

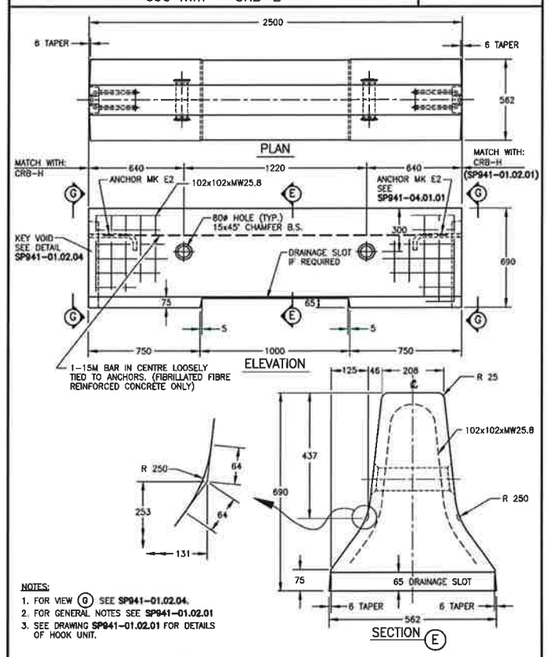

NOTES:
1. FOR VIEW (G) SEE **SP941–01.02.04.**
2. FOR GENERAL NOTES SEE **SP941–01.02.01**
3. SEE DRAWING **SP941–01.02.01** FOR DETAILS OF HOOK UNIT.

NOT TO SCALE — ALL DIMENSIONS ARE IN MILLIMETRES UNLESS OTHERWISE NOTED

PRECAST CONCRETE DRAINAGE BARRIER (SPECIAL USE 5) 690 mm – CDB–E DETAILS

SP941–01.02.05

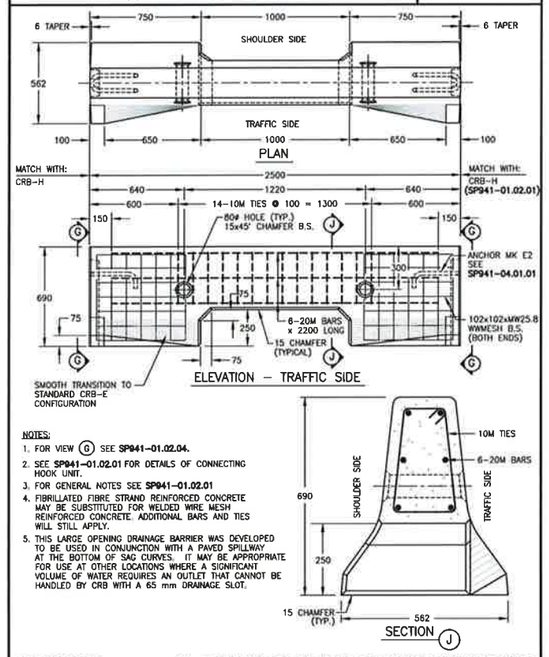

NOTES:
1. FOR VIEW (G) SEE **SP941–01.02.04.**
2. SEE **SP941–01.02.01** FOR DETAILS OF CONNECTING HOOK UNIT.
3. FOR GENERAL NOTES SEE **SP941–01.02.01**
4. FIBRILLATED FIBRE STRAND REINFORCED CONCRETE MAY BE SUBSTITUTED FOR WELDED WIRE MESH REINFORCED CONCRETE. ADDITIONAL BARS AND TIES WILL STILL APPLY.
5. THIS LARGE OPENING DRAINAGE BARRIER WAS DEVELOPED TO BE USED IN CONJUNCTION WITH A PAVED SPILLWAY AT THE BOTTOM OF SAG CURVES. IT MAY BE APPROPRIATE FOR USE AT OTHER LOCATIONS WHERE A SIGNIFICANT VOLUME OF WATER REQUIRES AN OUTLET THAT CANNOT BE HANDLED BY CRB WITH A 65 mm DRAINAGE SLOT.

NOT TO SCALE — ALL DIMENSIONS ARE IN MILLIMETRES UNLESS OTHERWISE NOTED

PRECAST CONCRETE TRANSITION BARRIER 690 mm TO 460 mm – CTB–1E

SP941–03.01.01

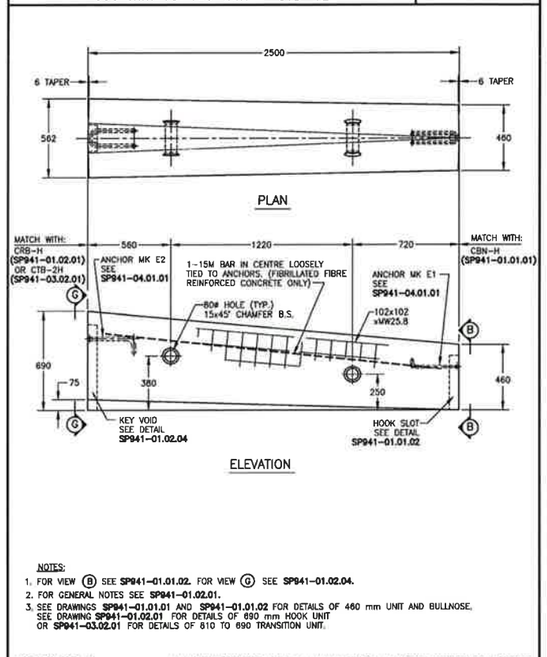

NOTES:
1. FOR VIEW (B) SEE **SP941–01.01.02.** FOR VIEW (G) SEE **SP941–01.02.04.**
2. FOR GENERAL NOTES SEE **SP941–01.02.01.**
3. SEE DRAWINGS **SP941–01.01.01** AND **SP941–01.01.02** FOR DETAILS OF 460 mm UNIT AND BULLNOSE. SEE DRAWING **SP941–01.02.01** FOR DETAILS OF 690 mm HOOK UNIT OR **SP941–03.02.01** FOR DETAILS OF 810 TO 690 TRANSITION UNIT.

NOT TO SCALE — ALL DIMENSIONS ARE IN MILLIMETRES UNLESS OTHERWISE NOTED

ALTERNATE DESIGN

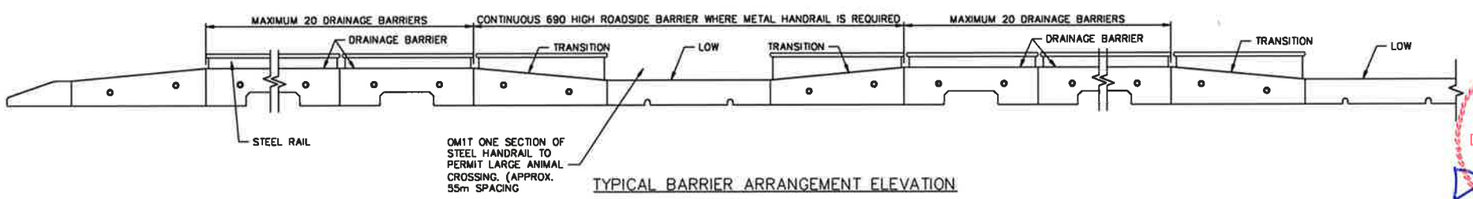

TYPICAL BARRIER ARRANGEMENT ELEVATION

NOTE: ALL BARRIERS SHALL HAVE DRAINAGE SLOTS OR BE DRAINAGE BARRIERS

PROFESSIONAL ENGINEER — PROVINCE OF BRITISH COLUMBIA — D. G. CHALMERS — DEC 18 2018

Parks Canada Agency / L'Agence Parcs Canada

PARSONS

KEY PLAN
N.T.S.

Revision/Révision	Description/Description	Date/Date
–	----	----
–	----	----
–	----	----
3	ISSUED FOR TENDER	18/12/2018
1	ISSUED FOR TENDER	09/11/2018
0	ISSUED FOR TENDER	27/10/2017

Client/client

Parks Canada Agency / L'Agence Parcs Canada
Western and Northern Region / Ouest et Nord du Canada

Project title/Titre du projet
TOFINO
PACIFIC RIM NATIONAL PARK RESERVE
?apsčiik tasÌi (Ups-cheek ta-shee)
"Going in the right direction on the trail"

Consultant Signature Only

Designed by/Concept par: DON CHALMERS / 2016-11
Drawn by/Dessiné par: DAVID COX / 2016-11
PCA Project Manager/Gestionnaire Autorité Administrateur du Projets APC: JACKIE HICKS

Drawing title/Titre du dessin
?apsčiik tasÌi (Ups-cheek ta-shee) "Going in the right direction on the trail"
TRAIL DESIGN

BARRIER DETAILS 2

Project No./No. du projet	Sheet/Feuille	Revision no./Le Révision no.
PCA #1522	T-48.1 OF	2

G:\TVA\0323 - PACIFIC RIM NPR\PACIFIC RIM\DWG\0323-TT-SHEETS T-17-48.DWG ACTED ON 2018/12/13 3:48pm BY POOJDOC
PWCSC – A1 – 8413584

W-Beam Barrier on Timber Posts SGR04 / Thrie Beam Barrier on Timber Posts SGM09

SP312-1

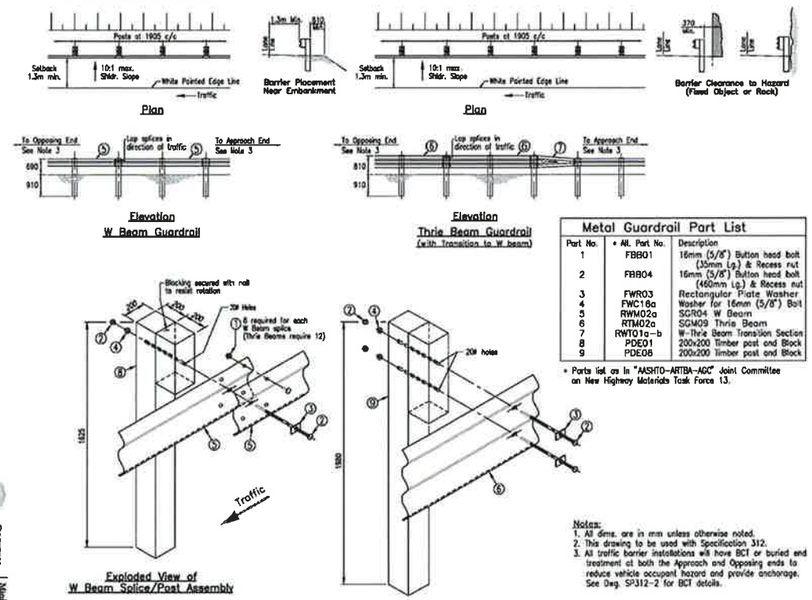

Metal Guardrail Part List		
Part No.	* Alt. Part No.	Description
1	FBB01	16mm (5/8") Button head bolt (30mm Lg.) & Recess nut
2	FBB04	16mm (5/8") Button head bolt (460mm Lg.) & Recess nut
3	FWR03	Rectangular Plate Washer
4	FWC16a	Washer for 16mm (5/8") Bolt
5	RWM02a	SGR04 W Beam
6	RTM02a	SGM09 Thrie Beam
7	RWT01a-b	W-Thrie Beam Transition Section
8	PDE01	200x200 Timber post and Block
9	PDE06	200x200 Timber post and Block

* Parts list as in "AASHTO-ARTBA-AGC" Joint Committee on New Highway Materials Task Force 13.

Notes:
1. All dims. are in mm unless otherwise noted.
2. This drawing to be used with Specification 312.
3. All traffic barrier installations will have BCT or buried end treatment at both the Approach and Opposing ends to reduce vehicle occupant hazard and provide anchorage. See Dwg. SP312-2 for BCT details.

NOT TO SCALE
ALL DIMENSIONS ARE IN MILLIMETRES UNLESS OTHERWISE NOTED

BRITISH COLUMBIA | Ministry of Transportation & Infrastructure

Steel Guardrail Beam Parts

SP312-6

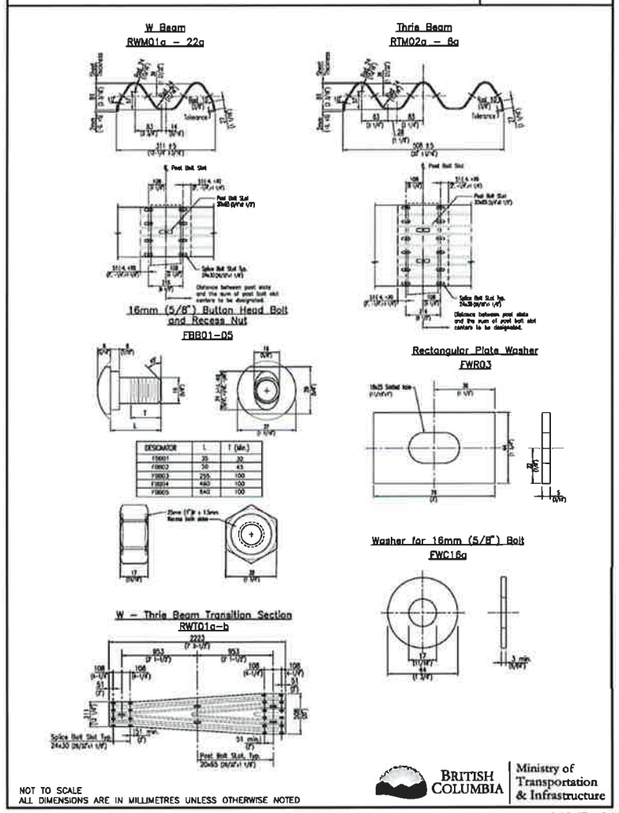

NOT TO SCALE
ALL DIMENSIONS ARE IN MILLIMETRES UNLESS OTHERWISE NOTED

BRITISH COLUMBIA | Ministry of Transportation & Infrastructure

Parks Canada Agency | L'Agence Parcs Canada

PARSONS

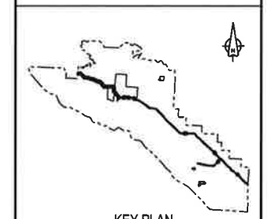

KEY PLAN
N.T.S.

Revision/Révision	Description/Description	Date/Date
-	----	----
-	----	----
-	----	----
-	----	----
1	ISSUED FOR TENDER	18/12/2018
0	ISSUED FOR TENDER	27/10/2017

Client/client

Parks Canada Agency | L'Agence Parcs Canada
Western and Northern Region | Ouest et Nord du Canada

Project title/Titre du projet
TOFINO
PACIFIC RIM NATIONAL PARK RESERVE
?apsclik tasII (Ups-cheek ta-shee) "Going in the right direction on the trail"

Consultant Signature Only

Designed by/Concept par: DON CHALMERS / 2016-11
Drawn by/Dessiné par: DAVID COX / 2016-11
PCA Project Manager/Technical Authority / Administrateur de Projets APC: JACKIE HICKS

Drawing title/Titre du dessin
?apsclik tasII (Ups-cheek ta-shee) "Going in the right direction on the trail"
TRAIL DESIGN

TYPICAL W-BEAM BARRIERS 1

Project No./No. du projet	Sheet/Feuille	Revision no./Le Révision no.
PCA #1522	T-48.2 OF	1

PROFESSIONAL ENGINEER — PROVINCE OF BRITISH COLUMBIA — D. G. CHALMERS
DEC 18 2018

PWGSC – A1 – 8413584

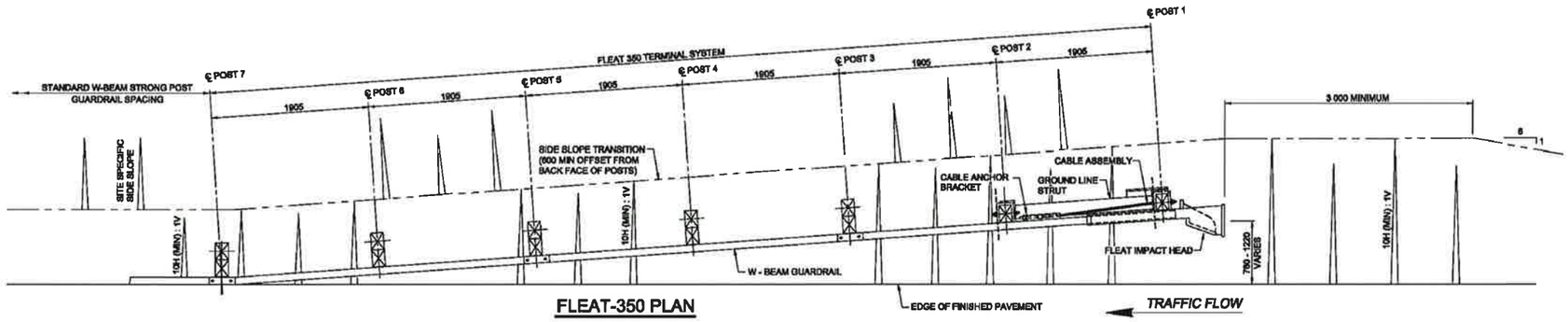

FLEAT-350 PLAN

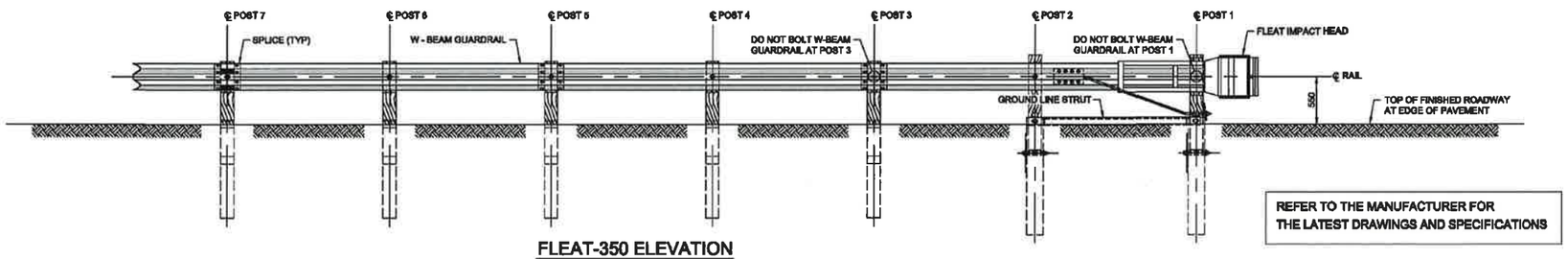

REFER TO THE MANUFACTURER FOR THE LATEST DRAWINGS AND SPECIFICATIONS

FLEAT-350 ELEVATION

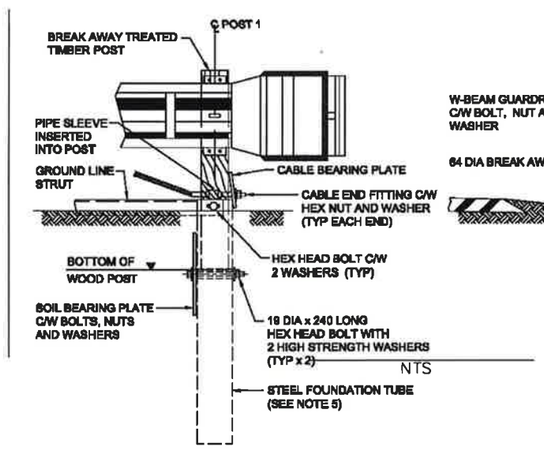

POST 1 ELEVATION
DO NOT BOLT W-BEAM GUARDRAIL TO POST 1

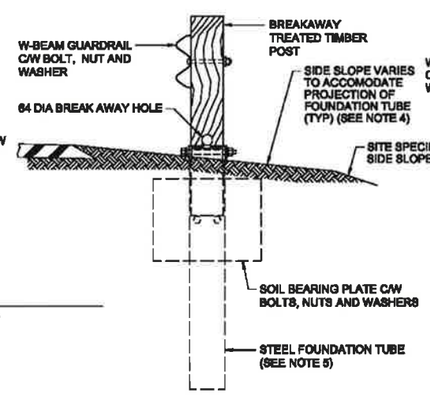

POST 2 SECTION

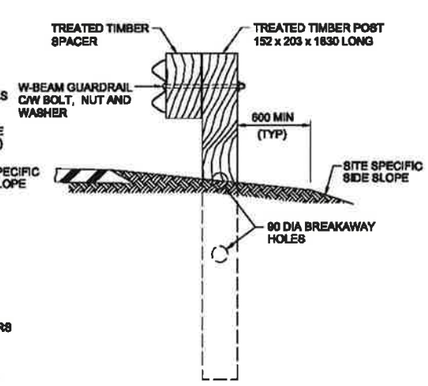

POSTS 3, 4, 5, 6, AND 7 SECTION
(DO NOT BOLT W-BEAM GUARDRAIL TO POST 3)

POST DETAILS

W-BEAM STRONG POST
TL-3 FLEAT 350
ENERGY ABSORBING TERMINAL

NOTES:

1. THE FLEAT 350 SYSTEM DEPICTED ON THIS DRAWING OR ANY SIMILLARLY APPROVED PRODUCT FROM THE BC MINISTRY OF TRANSPORTAION "APPROVED LIST" WILL BE ACCEPTED.
2. THIS DRAWING SHOWS THE INSTALLATION OF THE RIGHT SHOULDER EXTRUDER TERMINAL. FOR LEFT SHOULDER INSTALLATIONS, SUCH AS FOR UNIDIRECTIONAL TRAFFIC OR DIVIDED HIGHWAYS WITH WIDE MEDIANS, THE EXTRUDER TERMINAL SHOWN IS INVERTED.
3. RAIL SECTIONS ARE TO BE LAPPED IN THE DIRECTION OF TRAFFIC FLOW.
4. TOP OF FOUNDATION TUBES SHALL BE SET BETWEEN 64 AND 76 ABOVE THE TOP OF PAVED SHOULDER EDGE AND SHALL NOT PROJECT MORE THAN 100 ABOVE THE FINISHED SIDE SLOPE GRADE AT POST.
5. FOR POSTS 1 AND 2, THE FOLLOWING FOUNDATION TUBES MAY BE USED:
   a. 1830 LONG SPLIT OR SOLID FOUNDATIONTUBES WITHOUT SOIL BEARING PLATES.
   b. 1524 LONG SOLID OR 1370 LONG SOLID FOUNDATION TUBES WITH SOIL BEARING PLATES.
6. TO ENSURE PROPER DELINEATION, REFLECTIVE SHEETING ON THE FRONT FACE OF THE FLEAT 350 OR SIMILARRLY APPROVED PRODUCT SHALL BE PROVIDED AS PART OF THE INSTALLED SYSTEM.
7. POST 3 MARKS THE BEGINNING OF THE CALCULATED LENGTH OF NEED.
8. ALL FITTINGS AND HARDWARE SHALL BE GALVANIZED.
9. POSTS SHALL BE SET BY INSTRUMENT FOR ALIGNMENT AND GRADE.

PROFESSIONAL PROVINCE OF D. G. CHALMERS BRITISH COLUMBIA

DEC 18 2018

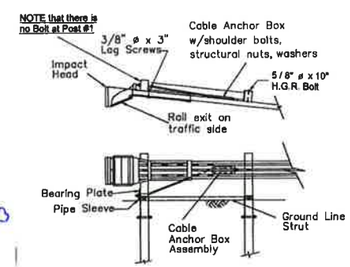

ABOVE-GROUND DETAILS AT POST LOCATION 1 & 2

Parks Canada Agency / L'Agence Parcs Canada

PARSONS

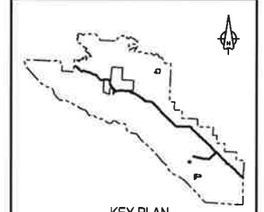

KEY PLAN
N.T.S.

Revision/ Révision	Description/Description	Date/Date
-	----	----
-	----	----
-	----	----
2	ISSUED FOR TENDER	18/12/2018
1	ISSUED FOR TENDER	09/11/2018
0	ISSUED FOR TENDER	27/10/2017

Client/client

Parks Canada Agency / L'Agence Parcs Canada
Western and Northern Region / Ouest et Nord du Canada

Project title/Titre du projet
TOFINO
PACIFIC RIM NATIONAL PARK RESERVE
?apsclik tasʼl (Ups-cheek ta-shee) "Going in the right direction on the trail"

Consultant Signature Only

Designed by/Concept par
DON CHALMERS / 2016-11

Drawn by/Dessiné par
DAVID COX / 2016-11

PCA Project Manager/Technical Authority
Administrateur de Projets APC
JACKIE HICKS

Drawing title/Titre du dessin
?apsclik tasʼl (Ups-cheek ta-shee) "Going in the right direction on the trail"
TRAIL DESIGN

TYPICAL W-BEAM BARRIERS 2

Project No./No. du projet	Sheet/Feuille	Revision no./ Le Révision no.
PCA #1522	T-48.3 OF	2

PWGSC - A1 - 8411X584

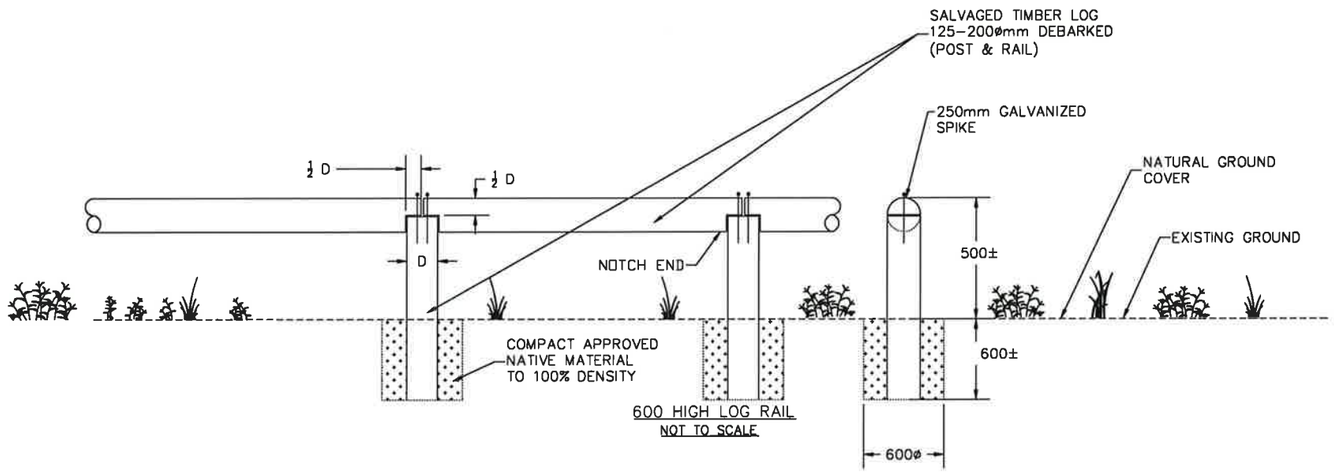

600 HIGH LOG RAIL
NOT TO SCALE

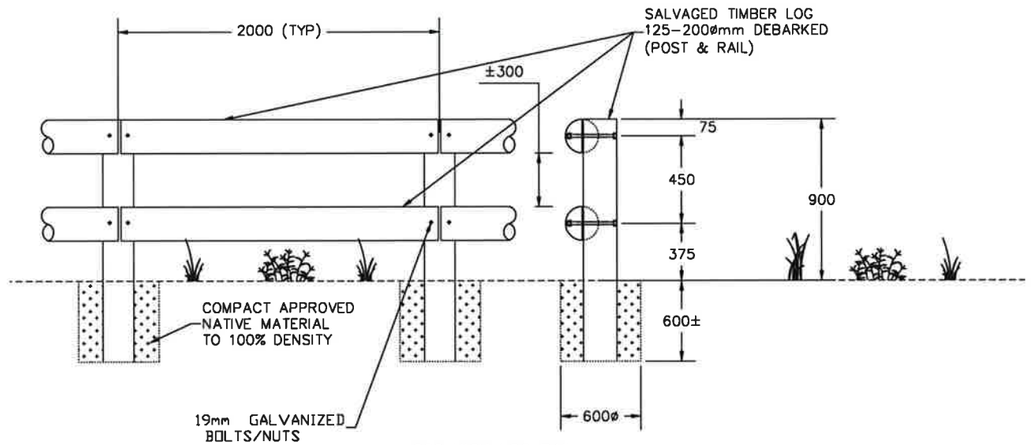

900 HIGH LOG RAIL
NOT TO SCALE

TIMBER NOTES

1. ALL NEW TIMBER TO CONFORM TO CSA–0141–91 "SOFTWOOD LUMBER" TIMBER GRADES AND SPECIES AS FOLLOWS:

MEMBER	(FINISH)	GRADE
CAP/RAILS	(S4S)	GROUP A No. 1, OR BETTER
POST	(ROUGH)	GROUP A No. 1, OR BETTER

2. ALL TIMBER CONSTRUCTION, DETAILS AND FASTENINGS SHALL CONFORM FULLY TO CSA 086, CURRENT EDITION.
3. PRE–DRILL ALL BOLT AND LAG SCREW SHANK HOLES (BUT NOT LEAD HOLES). BOLT HOLES SHOULD BE FULL LENGTH AND SIZE FOR MACHINE BOLTS.
4. TIMBER TO BE MILLED BY PARKS CANADA FROM WESTERN RED CEDAR LOGS SALVAGED IN PACIFIC RIM NATIONAL PARK.
5. POSTS FOR 900 HIGH LOG RAIL TO BE TREATED WITH PRESERVATIVE IN ACCORDANCE WITH SPECIFICATIONS.

PROFESSIONAL ENGINEER
PROVINCE OF BRITISH COLUMBIA
D. G. CHALMERS
DEC 18 2018

Parks Canada Agency / L'Agence Parcs Canada

PARSONS

KEY PLAN
N.T.S.

Revision/Révision	Description/Description	Date/Date
–	----	----
–	----	----
–	----	----
2	ISSUED FOR TENDER	18/12/2018
1	ISSUED FOR TENDER	18/12/2017
0	ISSUED FOR TENDER	27/10/2017

Client/client

Parks Canada Agency / L'Agence Parcs Canada
Western and Northern Region / Ouest et Nord du Canada

Project title/Titre du projet
TOFINO
PACIFIC RIM NATIONAL PARK RESERVE
?apsčlik ťasīi
(Ups-cheek ta-shee)
"Going in the right direction on the trail"

Consultant Signature Only

Designed by/Conceptt par
DON CHALMERS / 2016-11

Drawn by/Dessine par
DAVID COX / 2016-11

PCA Project Manager/Technical Authority
Administrateur de Projets APC
JACKIE HICKS

Drawing title/Titre du dessin
?apsčlik ťasīi (Ups-cheek ta-shee)
"Going in the right direction on the trail"
TRAIL DESIGN

TYPICAL RAILINGS 1

Project No./No. du projet	Sheet/Feuille	Revision no./La révision no.
PCA #1522	T-49.1 OF	2

G:\TY\#0525 – PACIFIC RIM 2016–19\PACIFIC RIM\REPORT\0525-PT1-SHEETS 1-49.DWG PLOTTED ON 2018/12/13 4:08pm BY POOSIOC

PWGSC – A1 – 8413X594

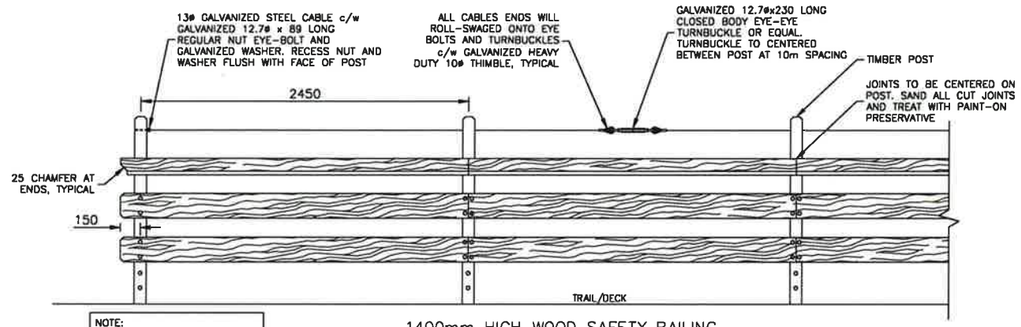

NOTE:
DAMAGE THREADS ON ALL CABLE FASTENERS TO PREVENT PUBLIC REMOVAL/LOOSENING

1400mm HIGH WOOD SAFETY RAILING
ELEVATION
NOT TO SCALE

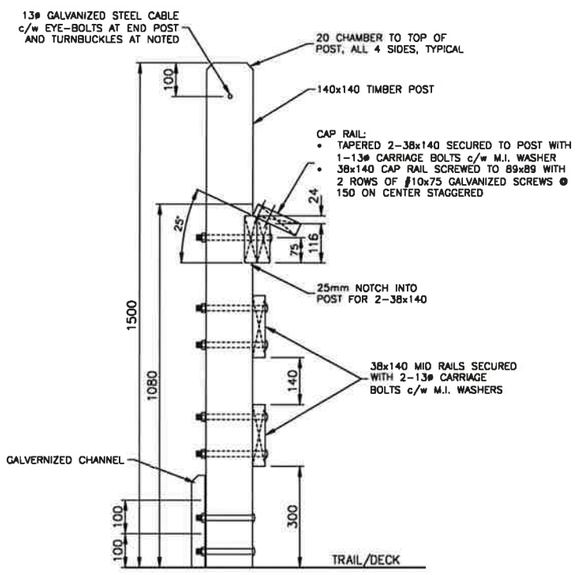

1400mm HIGH WOOD SAFETY RAILING DETAIL
NOT TO SCALE

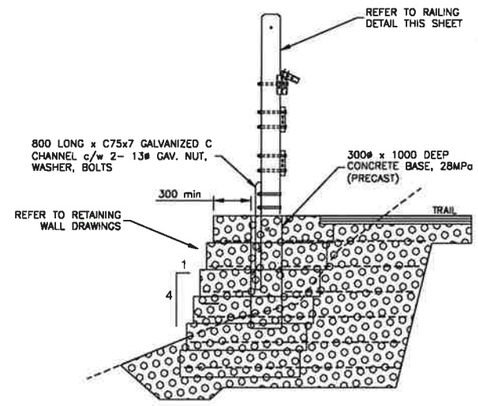

VEGETATED RETAINING WALL
NOT TO SCALE

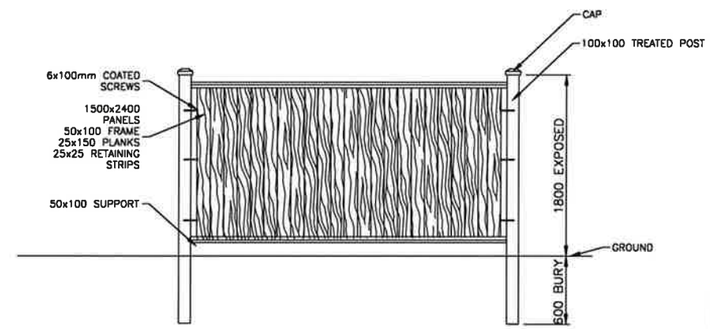

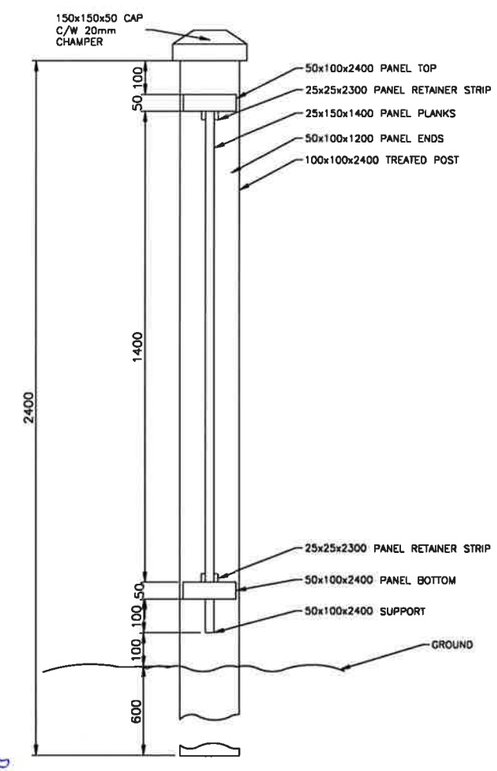

GREEN POINT FENCE
NOT TO SCALE

PROFESSIONAL
PROVINCE OF
D. G. CHALMERS
BRITISH COLUMBIA
ENGINEER
DEC 18 2018

TIMBER NOTES

1. ALL NEW TIMBER TO CONFORM TO CSA-O141-91 "SOFTWOOD LUMBER" TIMBER GRADES AND SPECIES AS FOLLOWS:

MEMBER	(FINISH)	GRADE
CAP/RAILS	(S4S)	GROUP A No. 1, OR BETTER
POST	(ROUGH)	GROUP A No. 1, OR BETTER

2. ALL TIMBER CONSTRUCTION, DETAILS AND FASTENINGS SHALL CONFORM FULLY TO CSA O86, CURRENT EDITION.
3. PRE-DRILL ALL BOLT AND LAG SCREW SHANK HOLES (BUT NOT LEAD HOLES). BOLT HOLES SHOULD BE FULL LENGTH AND SIZE FOR MACHINE BOLTS.
4. TIMBER TO BE MILLED BY PARKS CANADA FROM WESTERN RED CEDAR LOGS SALVAGED IN PACIFIC RIM NATIONAL PARK.
5. POSTS FOR 900 HIGH LOG RAIL TO BE TREATED WITH PRESERVATIVE IN ACCORDANCE WITH SPECIFICATIONS.

Parks Canada Agency / L'Agence Parcs Canada

PARSONS

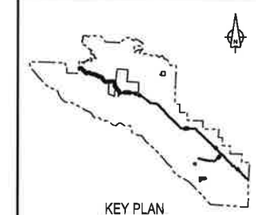

KEY PLAN
N.T.S.

Revision/Révision	Description/Description	Date/Date
-	----	----
-	----	----
-	----	----
2	ISSUED FOR TENDER	18/12/2018
1	ISSUED FOR TENDER	30/11/2017
0	ISSUED FOR TENDER	27/10/2017

Client/client

Parks Canada Agency / L'Agence Parcs Canada
Western and Northern Region / Ouest et Nord du Canada

Project title/Titre du projet
TOFINO
PACIFIC RIM NATIONAL PARK RESERVE
?apsčlk tasīi
(Ups-cheek ta-shee)
"Going in the right direction on the trail"

Consultant Signature Only

Designed by/Concept par
DON CHALMERS / 2016-11

Drawn by/Dessiné par
DAVID COX / 2016-11

PCA Project Manager/Technical Authority
Administrateur de Projets APC
JACKIE HICKS

Drawing title/Titre du dessin
?apsčlk tasīi (Ups-cheek ta-shee)
"Going in the right direction on the trail"
TRAIL DESIGN

TYPICAL RAILINGS AND WOOD FENCE 2

Project No./No. du projet	Sheet/Feuille	Revision no./Le Révision no.
PCA #1522	T-49.2 OF	2

PWGSC – A1 – 8413594

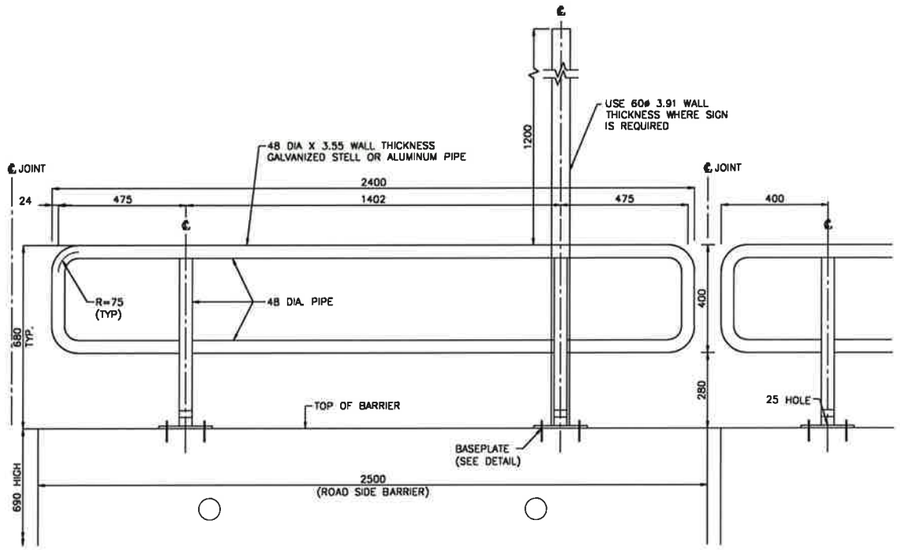

ROADSIDE BARRIER WITH 680mm STEEL RAIL
NOT TO SCALE

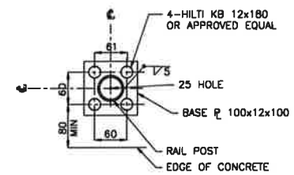

MOUNTING DETAILS
CONCRETE BARRIER
NOT TO SCALE

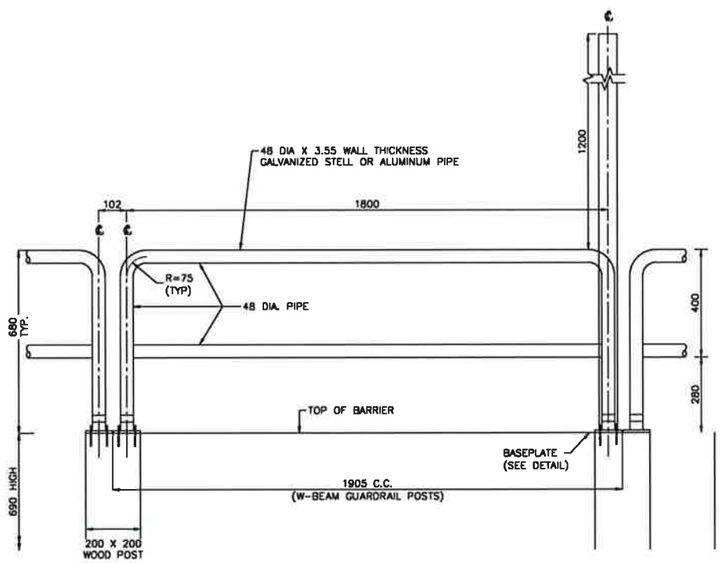

ROADSIDE W-BEAM GUARDRAIL WITH 680mm STEEL RAIL
NOT TO SCALE

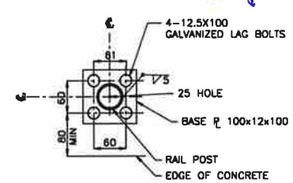

MOUNTING DETAILS
W-BEAM WOOD POST
NOT TO SCALE

PROFESSIONAL ENGINEER — PROVINCE OF BRITISH COLUMBIA — D. G. CHALMERS
DEC 18 2018

Parks Canada Agency / L'Agence Parcs Canada

PARSONS

KEY PLAN
N.T.S.

Revision/ Révision	Description/Description	Date/Date
-	----	----
-	----	----
-	----	----
2	ISSUED FOR TENDER	18/12/2018
1	ISSUED FOR TENDER	16/11/2018
0	ISSUED FOR TENDER	27/10/2017

Client/client

Parks Canada Agency / L'Agence Parcs Canada
Western and Northern Region / Ouest et Nord du Canada

Project title/Titre du projet
TOFINO
PACIFIC RIM NATIONAL PARK RESERVE
?apsčiik tasii (Ups-cheek ta-shee) "Going in the right direction on the trail"

Consultant Signature Only

Designed by/Concept par
DON CHALMERS / 2016-11

Drawn by/Dessiné par
DAVID COX / 2016-11

PCA Project Manager/Technical Authority
Administrateur de Projets APC
JACKIE HICKS

Drawing title/Titre du dessin
?apsčiik tasii (Ups-cheek ta-shee) "Going in the right direction on the trail"
TRAIL DESIGN

TYPICAL RAILINGS 3

Project No./No. du projet	Sheet/Feuille	Revision no./ Le Révision no.
PCA #1522	T-49.3 OF	2

PWGSC – A1 – 841X594

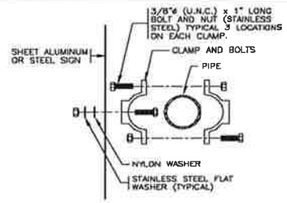

SIGN MOUNTING DETAILS

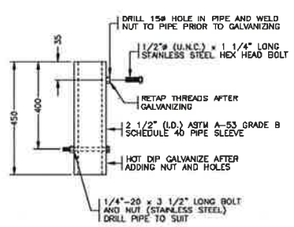

GALVANIZED PIPE SLEEVE DETAIL

NOTES
1. SEE STANDARD SPECIFICATIONS & SPECIAL PROVISIONS FOR ADDITIONAL INFORMATION.
2. ALL DIMENSIONS ARE IN MILLIMETRES UNLESS OTHERWISE NOTED.

NOT TO SCALE

BRITISH COLUMBIA Ministry of Transportation

No.	Revision	Date
F		
E		
D		
C		
B		
A		

ROUND STEEL SIGN POST INSTALLATION DETAILS

Date 18/11/94 Approved E.L. (Signature on File) Chief Highway Engineer

SPECIFICATION DRAWING No. SP635-3.8.2

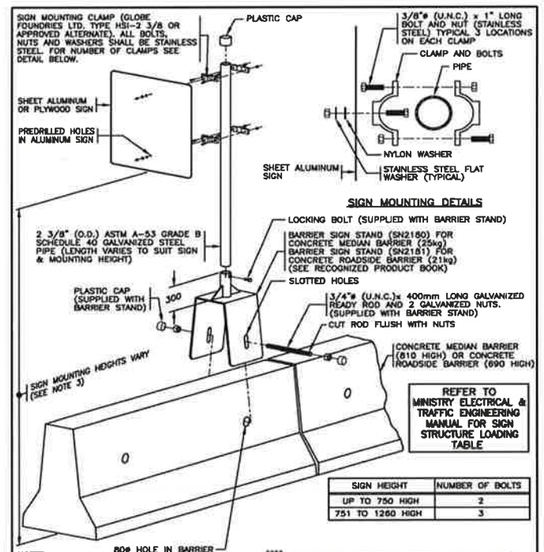

SIGN MOUNTING DETAILS

REFER TO MINISTRY ELECTRICAL & TRAFFIC ENGINEERING MANUAL FOR SIGN STRUCTURE LOADING TABLE

SIGN HEIGHT	NUMBER OF BOLTS
UP TO 750 HIGH	2
751 TO 1260 HIGH	3

NOTES
1. SEE STANDARD SPECIFICATIONS & SPECIAL PROVISIONS FOR ADDITIONAL INFORMATION.
2. ALL DIMENSIONS ARE IN MILLIMETRES UNLESS OTHERWISE NOTED.
3. MOUNTING HEIGHTS & OFFSETS SHALL FALL WITHIN THE RANGES NOTED IN THE MINISTRY MANUAL OF STANDARD TRAFFIC SIGNS & PAVEMENT MARKINGS.

NOT TO SCALE

BRITISH COLUMBIA Ministry of Transportation

No.	Revision	Date
E	REFER TO RECOGNIZED PRODUCT BOOK	APR 05
D	MOUNTING HEIGHTS & OFFSETS REFERED THE MINISTRY MANUAL OF STANDARD TRAFFIC SIGNS	NOV 98
C	DWG. No. & MOUNTING HEIGHTS REVISED	DEC 96
B	SIGN MATERIAL & SIGN WIDTH REVISED	AUG 95
A	GENERAL REVISION	AUG 94

ROUND STEEL SIGN POST ON BARRIER SIGN STAND INSTALLATION DETAILS

Date 30/09/93 Approved E.L. (Signature on File) Chief Highway Engineer

SPECIFICATION DRAWING No. SP635-3.8.3

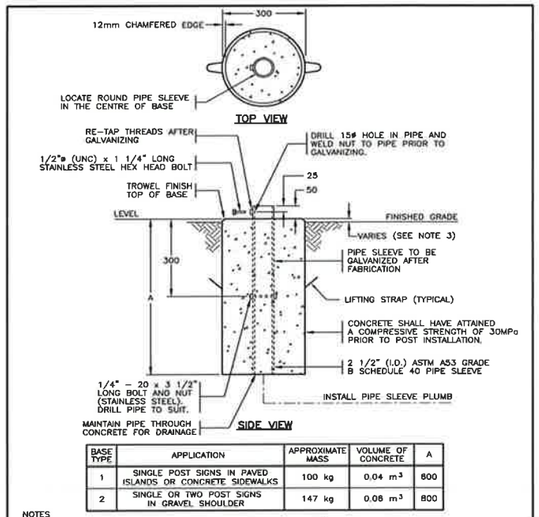

BASE TYPE	APPLICATION	APPROXIMATE MASS	VOLUME OF CONCRETE	A
1	SINGLE POST SIGNS IN PAVED ISLANDS OR CONCRETE SIDEWALKS	100 kg	0.04 m^3	800
2	SINGLE OR TWO POST SIGNS IN GRAVEL SHOULDER	147 kg	0.08 m^3	800

NOTES
1. SEE STANDARD SPECIFICATIONS & SPECIAL PROVISIONS FOR ADDITIONAL INFORMATION.
2. 'SN' DENOTES MINISTRY STOCK NUMBER.
3. BASE SHALL BE INSTALLED 25mm ABOVE FINISHED GRADE EXCEPT WHERE INSTALLED IN SIDEWALK IT SHALL BE FLUSH WITH TOP OF SIDEWALK WITH NO CHAMFERED EDGE.
4. ALL DIMENSIONS ARE IN MILLIMETRES UNLESS OTHERWISE NOTED.

NOT TO SCALE

SEE SPECIAL PROVISIONS FOR ALTERNATIVE BASES FOR SINGLE POST SIGNS

BRITISH COLUMBIA Ministry of Transportation

No.	Revision	Date
F		
E	REVISED NOTE	JUNE 06
D	GENERAL REVISIONS	APR 05
C	NOTE IN BOX ADDED	NOV 98
B	DRAWING NUMBER CHANGED	AUG 95
A	GENERAL REVISIONS	AUG 94

ROUND CONCRETE BASES FOR ROUND STEEL SIGN POSTS (PRECAST OR POURED IN PLACE)

Date 30/09/93 Approved E.L. (Signature on File) Chief Highway Engineer

SPECIFICATION DRAWING No. SP635-1.1.36

PROFESSIONAL PROVINCE OF D. G. CHALMERS BRITISH COLUMBIA ENGINEER
DEC 18 2016

Parks Canada Agency L'Agence Parcs Canada

PARSONS

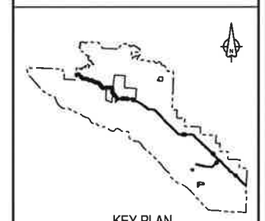

KEY PLAN
N.T.S.

Revision/Révision	Description/Description	Date/Date
-	----	----
-	----	----
-	----	----
-	----	----
1	ISSUED FOR TENDER	18/12/2016
0	ISSUED FOR TENDER	27/10/2016

Client/client

Parks Canada Agency L'Agence Parcs Canada

Western and Northern Region Ouest et Nord du Canada

Project title/Titre du projet
TOFINO
PACIFIC RIM NATIONAL PARK RESERVE
?apsčiik ťasii (Ups-cheek ta-shee)
"Going in the right direction on the trail"

Consultant Signature Only

Designed by/Concept par
DON CHALMERS / 2016-11

Drawn by/Dessine par
DAVID COX / 2016-11

PCA Project Manager/Technical Authority/Administrateur de Projets APC
JACKIE HICKS

Drawing title/Titre du dessin
?apsčiik ťasii (Ups-cheek ta-shee) "Going in the right direction on the trail"
TRAIL DESIGN

TYPICAL SIGNAGE

Project No./No. du projet	Sheet/Feuille	Revision no./Le Révision no.
PCA #1522	T-50.1 OF	1

PWCSC - A1 - 841X594

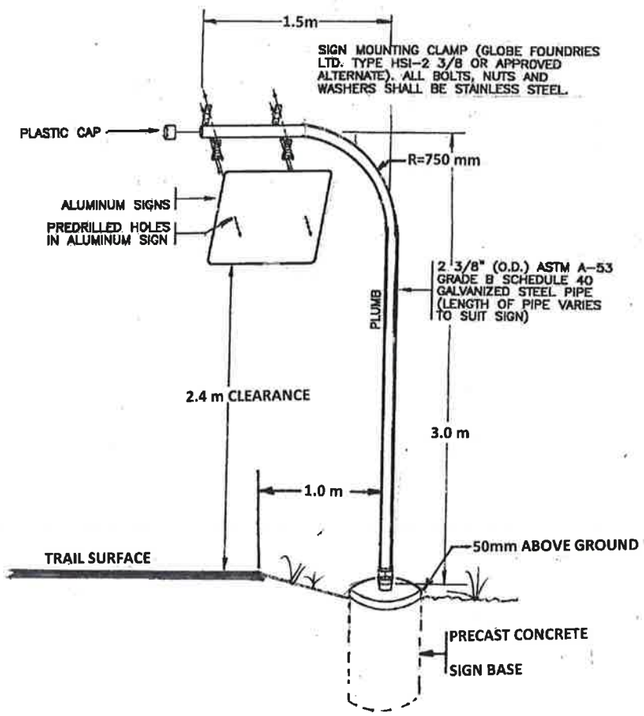

NOTE: CURVED POLE ON TRAIL
STRAIGHT POLE 3.0 m HIGH
ON ROADS AND HIGHWAY

TYPICAL SIGN DETAIL

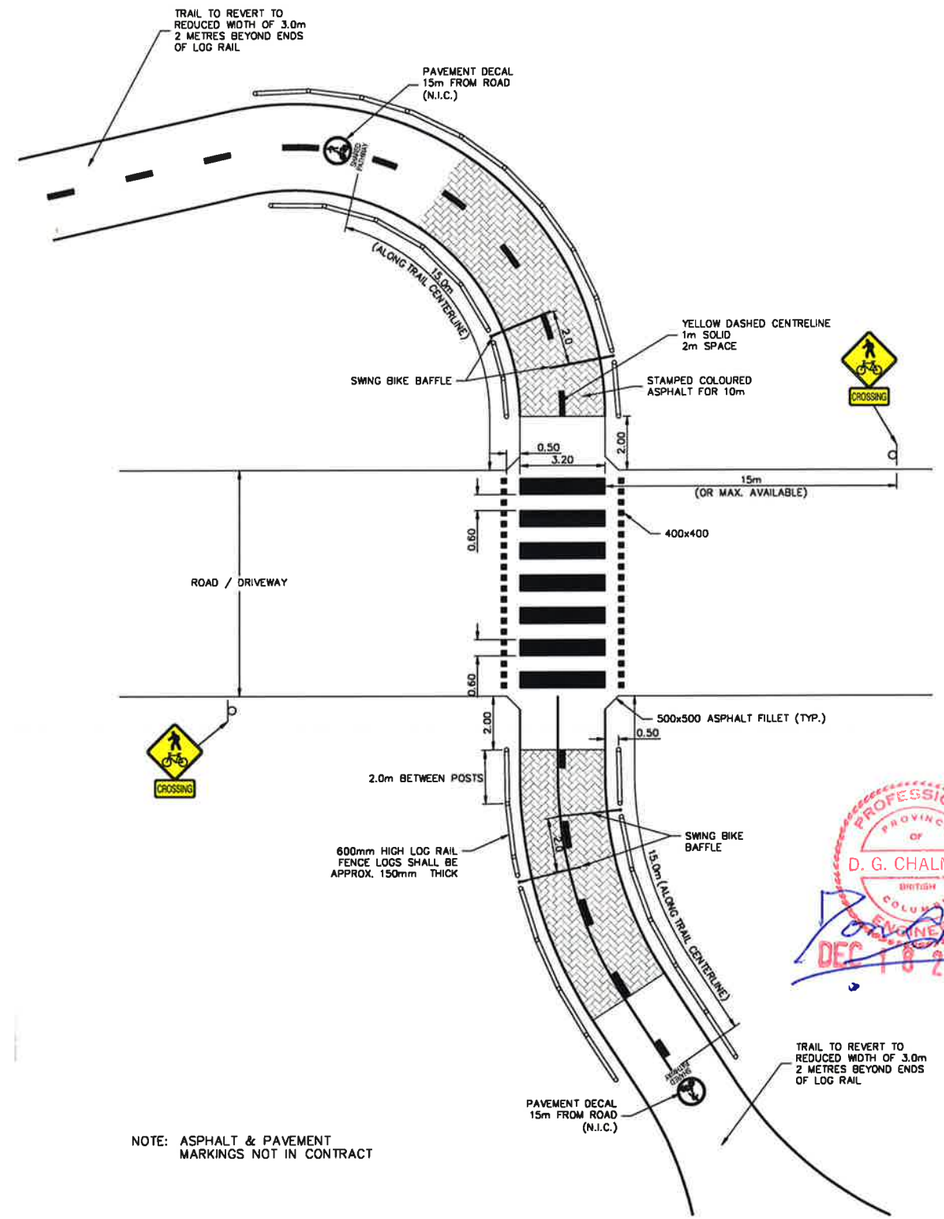

NOTE: ASPHALT & PAVEMENT
MARKINGS NOT IN CONTRACT

TYPICAL ROAD CROSSING DETAIL
1:100

PROFESSIONAL PROVINCE OF BRITISH COLUMBIA D. G. CHALMERS ENGINEER
DEC 18 2018

Parks Canada Agency / L'Agence Parcs Canada

PARSONS

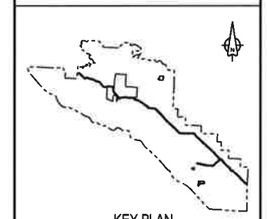

KEY PLAN
N.T.S.

Revision/Révision	Description/Description	Date/Date
-	----	----
-	----	----
-	----	----
2	ISSUED FOR TENDER	18/12/2018
1	ISSUED FOR TENDER	18/11/2018
0	ISSUED FOR TENDER	27/10/2017

Client/client

Parks Canada Agency / L'Agence Parcs Canada
Western and Northern Region / Ouest et Nord du Canada

Project title/Titre du projet
TOFINO
PACIFIC RIM NATIONAL PARK RESERVE
?apsčik tasii (Ups-cheek ta-shee) "Going in the right direction on the trail"

Consultant Signature Only

Designed by/Conceptt par
DON CHALMERS / 2016-11

Drawn by/Dessiné par
DAVID COX / 2016-11

PCA Project Manager/Technical Authority
Administrateur de Projets APC
JACKIE HICKS

Drawing title/Titre du dessin
?apsčik tasii (Ups-cheek ta-shee) "Going in the right direction on the trail"
TRAIL DESIGN

TYPICAL SIGNAGE AND ROAD CROSSING DETAIL

Project No./No. du projet	Sheet/Feuille	Revision no./La Révision no.
PCA #1522	T-50.2 OF	2

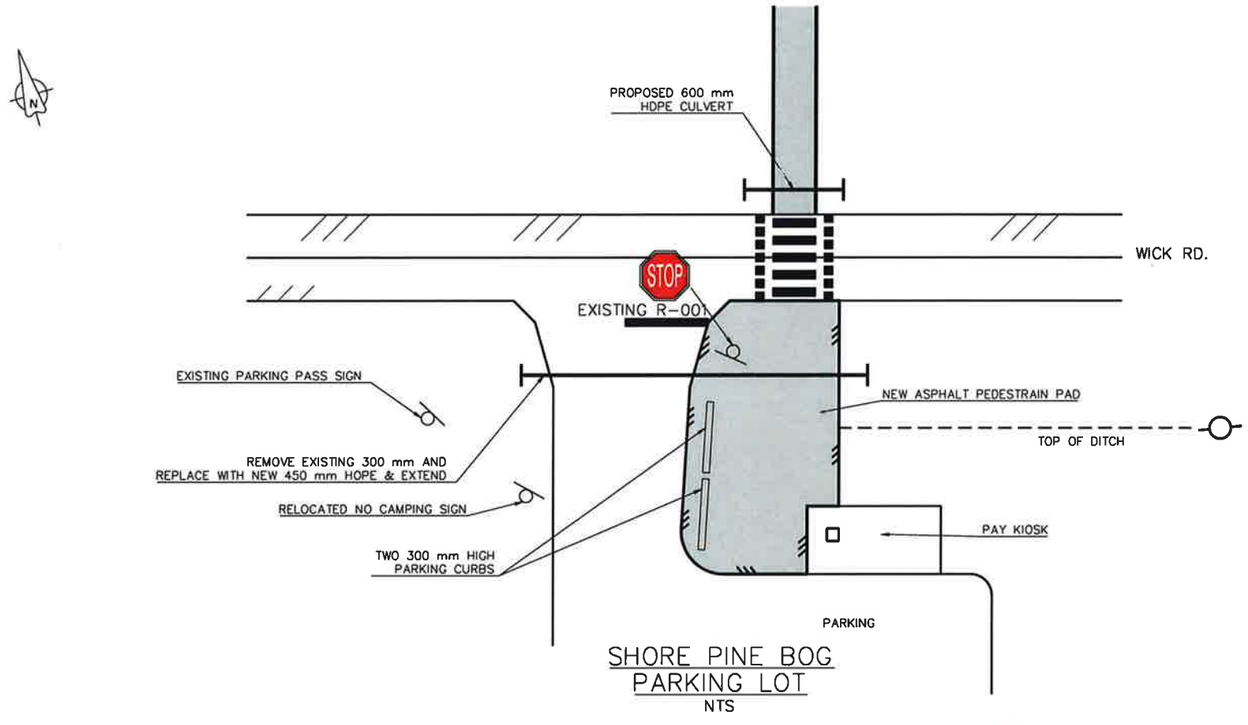

SHORE PINE BOG
PARKING LOT
NTS

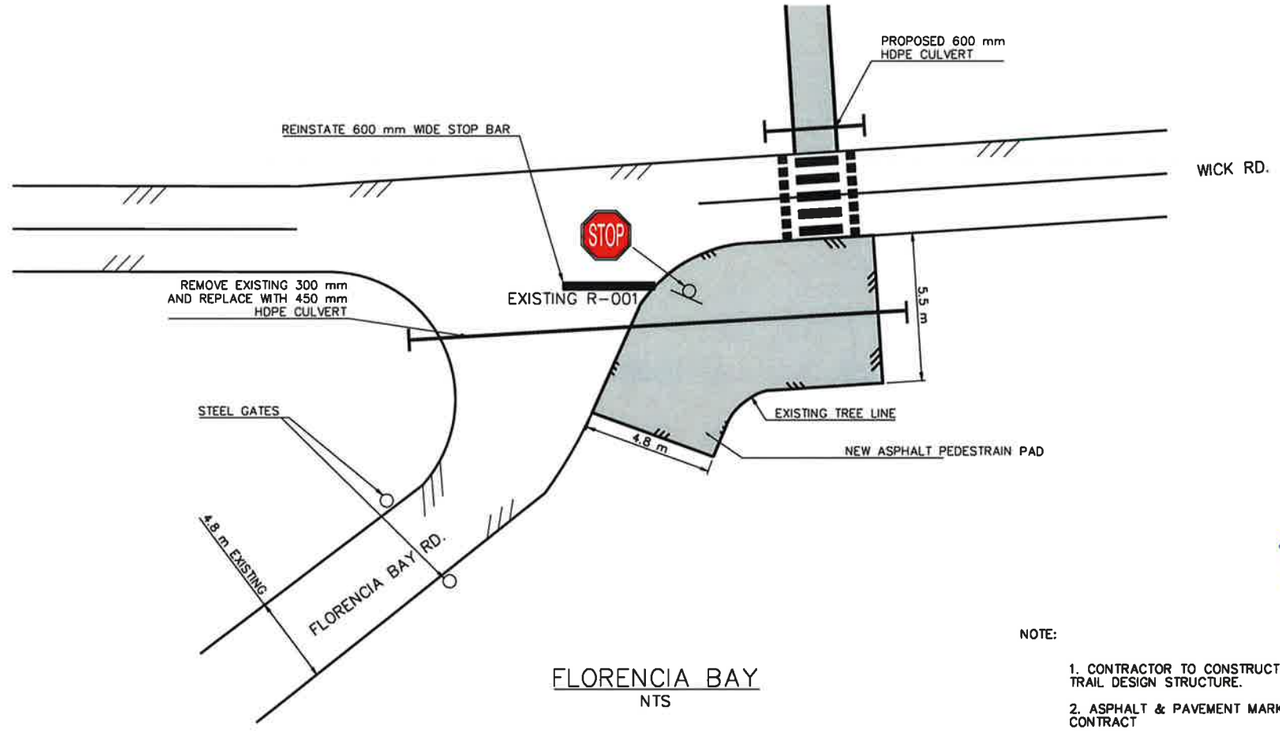

FLORENCIA BAY
NTS

NOTE:

1. CONTRACTOR TO CONSTRUCT PEDESTRAIN PAD USING TRAIL DESIGN STRUCTURE.
2. ASPHALT & PAVEMENT MARKINGS NOT IN CONTRACT

PROFESSIONAL PROVINCE OF BRITISH COLUMBIA D. G. CHALMERS
DEC 18 2018

Parks Canada Agency / L'Agence Parcs Canada

PARSONS

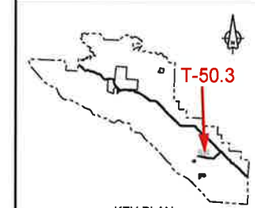

KEY PLAN
N.T.S.

Revision/Révision	Description/Description	Date/Date
-	----	----
-	----	----
-	----	----
-	----	----
1	ISSUED FOR TENDER	18/12/2018
0	ISSUED FOR TENDER	27/10/2017

Client/client

Parks Canada Agency / L'Agence Parcs Canada
Western and Northern Region / Ouest et Nord du Canada

Project title/Titre du projet
TOFINO
PACIFIC RIM NATIONAL PARK RESERVE
?apsclik tasii (Ups-cheek ta-shee)
"Going in the right direction on the trail"

Consultant Signature Only

Designed by/Concept par
DON CHALMERS / 2016-11

Drawn by/Dessine par
DAVID COX / 2016-11

PCA Project Manager/Technical Authority
Administrateur de Projets APC
JACKIE HICKS

Drawing title/Titre du dessin
?apsclik tasii (Ups-cheek ta-shee) "Going in the right direction on the trail"
TRAIL DESIGN

TYPICAL SIGNAGE & ROAD CROSSING DETAIL
WICK ROAD

Project No./No. du projet	Sheet/Feuille	Revision no./La révision no.
PCA #1522	T-50.3 OF	1

PWCSC – A1 – 841X594

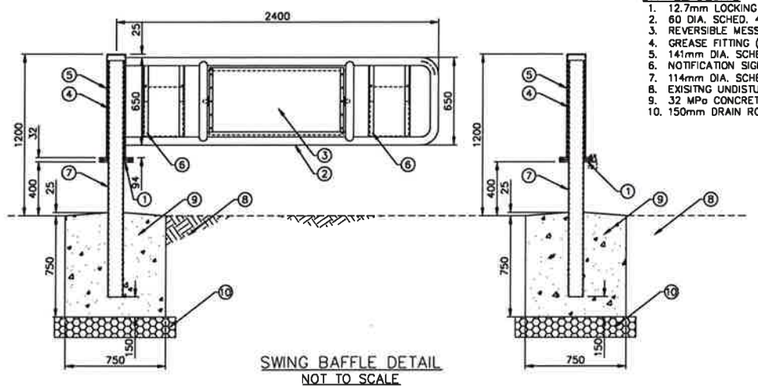

SWING BAFFLE DETAIL
NOT TO SCALE

BAFFLE DETAIL
1. 12.7mm LOCKING PLATES
2. 60 DIA. SCHED. 40 GALV. STEEL PIPE
3. REVERSIBLE MESSAGE SIGN
4. GREASE FITTING (UPPER)
5. 141mm DIA. SCHED. 40 GALV. STEEL PIPE
6. NOTIFICATION SIGN HOLDER
7. 114mm DIA. SCHED 40 GALV. STEEL INSERT (MALE)
8. EXISITNG UNDISTURBED SUBGRADE.
9. 32 MPa CONCRETE FOOTING
10. 150mm DRAIN ROCK

GENERAL NOTES
1. ALL PIPE AND COMPONENTS SHALL BE GALVANIZED AFTER FABRICATION
2. ALL PIPE TO BE SCHEDULE 40. STEEL.
3. ALL JOINTS TO BE CONTINUOUS WELDS (MIN 0.6 THICK)
4. 12.7mm LOCKING PLATE TO BE WELDED TO INSERT.
5. ALL MEASUREMENTS ARE IN MILLIMETRES UNLESS OTHERWISE STATED.
6. TEXT FOR SIGNS, INCLUDING: FONT, SIZE, AND LAYOUT TO BE APPROVED BY DEPARTMENTAL REPRESENTATIVE

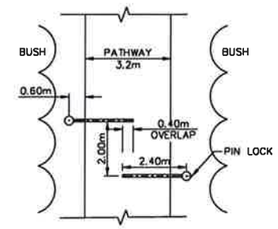

SWING BAFFLE – PLAN
TRAIL OPEN
NOT TO SCALE

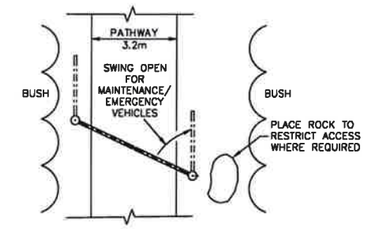

SWING BAFFLE – PLAN
TRAIL CLOSED
NOT TO SCALE

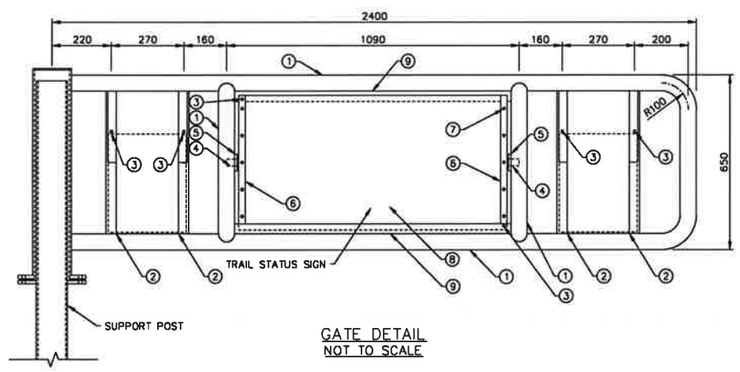

GATE DETAIL
NOT TO SCALE

GATE AND SIGN DETAILS
1. 60 DIAMETER SCHEDULE 40 GALVANIZED STEEL PIPE
2. 38mm U-CHANNEL 3.175mm W.T.
3. 10mm DRILLED HOLES FOR LOCKS (LOCKS SUPPLIED BY OWNER) 250mm OF ONE LEG REMOVED TO PERMIT SIGN INSTALLATION.
4. 25.4 mm DIAMETER X 90mm LONG STEEL ROD WELDED TO SIGN SUPPORT
5. 26mm DRILLED HOLE c/w 9.5 mm THICK 63 mm DIA. STIFFENING PLATE
6. 25mm X 500mm LONG 6 mm THICK STEEL SIGN SUPPORT c/w 4 DRILLED HOLES FOR 9.525mm SS BOLTS.
7. 9.525mm SS BLOTS 25 mm LONG, WASHERS AND NUTS. DEFORM THREAD TO PREVENT REMOVAL.
8. 1000mm X 500mm X 3mm SHEET STEEL SIGN ENGINEERING GRADE SHEETING c/w SILK SCREEN MESSAGE.
9. 6mm X 38mm STEEL BAR SIGN STOP.
10. ALL WELDS TO BE FULL PENETRATION UNLESS OTHERWISE NOTED.

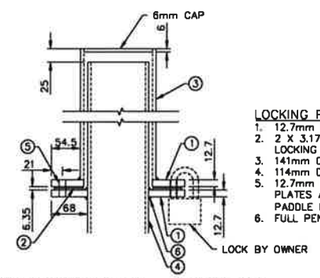

LOCKING PLATE DETAIL – ELEVATION
NOT TO SCALE

LOCKING PLATE DETAIL
1. 12.7mm LOCKING PLATE
2. 2 X 3.175mm THICK TEFLON WASHERS FIXED TO LOCKING PLATES
3. 141mm DIA SCHED. 40 GALV. STEEL PIPE
4. 114mm DIA SCHED. 40 GALV. STEEL PIPE
5. 12.7mm DIA HOLES DRILLED THROUGH LOCKING PLATES AND TEFLON WASHERS TO ACCOMMODATE PADDLE LOCK (LOCKS SUPPLIED BY OWNER)
6. FULL PENETRATION WELDS THROUGHOUT.

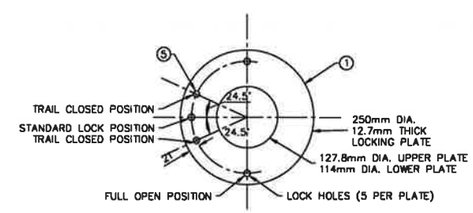

LOCKING PLATE DETAIL – PLAN
NOT TO SCALE

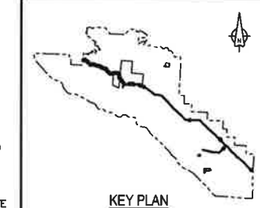

KEY PLAN
N.T.S.

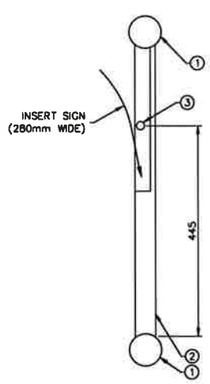

NOTIFICATION SIGN HOLDER DETAIL
NOT TO SCALE

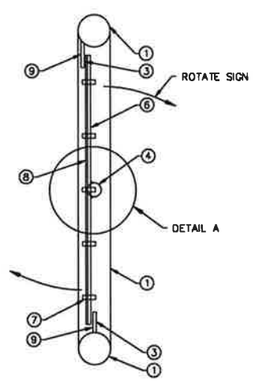

TRAIL STATUS SIGN DETAIL
NOT TO SCALE

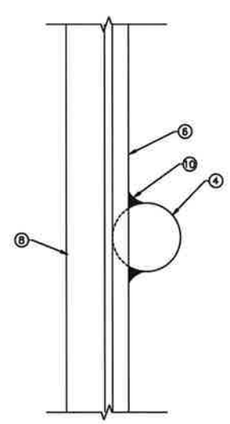

DETAIL A
NOT TO SCALE

FLIP SIDE

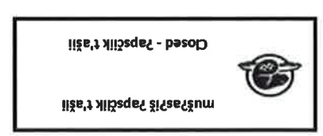

TRAIL STATUS SIGN (ENGLISH)
NOT TO SCALE

FLIP SIDE

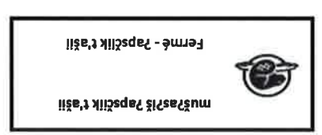

TRAIL STATUS SIGN (FRENCH)
NOT TO SCALE

TRAIL STATUS SIGN
1. TRAIL STATUS SIGN TO BE 1000mm X 500mm
2. ENGLISH AND FRENCH SIGNS TO BE PLACED ONE ON EACH GATE.
3. SIGN MESSAGE TO BE CONFIRMED BY PARKS CANADA PRIOR TO PRODUCTION.

PROFESSIONAL ENGINEER PROVINCE OF BRITISH COLUMBIA D. G. CHALMERS
DEC 18 2018

Parks Canada Agency / L'Agence Parcs Canada

PARSONS

Revision/ Révision	Description/Description	Date/Date
-	----	----
-	----	----
-	----	----
-	----	----
1	ISSUED FOR TENDER	18/12/2018
0	ISSUED FOR TENDER	27/10/2017

Client/client

Parks Canada Agency / L'Agence Parcs Canada
Western and Northern Region / Ouest et Nord du Canada

Project title/Titre du projet
TOFINO
PACIFIC RIM NATIONAL PARK RESERVE
ʔapsčiik t̓aši̓ł (Ups-cheek ta-shee)
"Going in the right direction on the trail"

Consultant Signature Only

Designed by/Conceptt par
DON CHALMERS / 2016-11

Drawn by/Dessiné par
DAVID COX / 2016-11

PCA Project Manager/Technical Authority
Administrateur de Projets APC
JACKIE HICKS

Drawing title/Titre du dessin
ʔapsčiik t̓aši̓ł (Ups-cheek ta-shee)
"Going in the right direction on the trail"
TRAIL DESIGN

TYPICAL BAFFLES

Project No./No. du projet	Sheet/Feuille	Revision no./ La Révision no.
PCA #1522	T-51 OF	1

PWGSC – A1 – 8413364

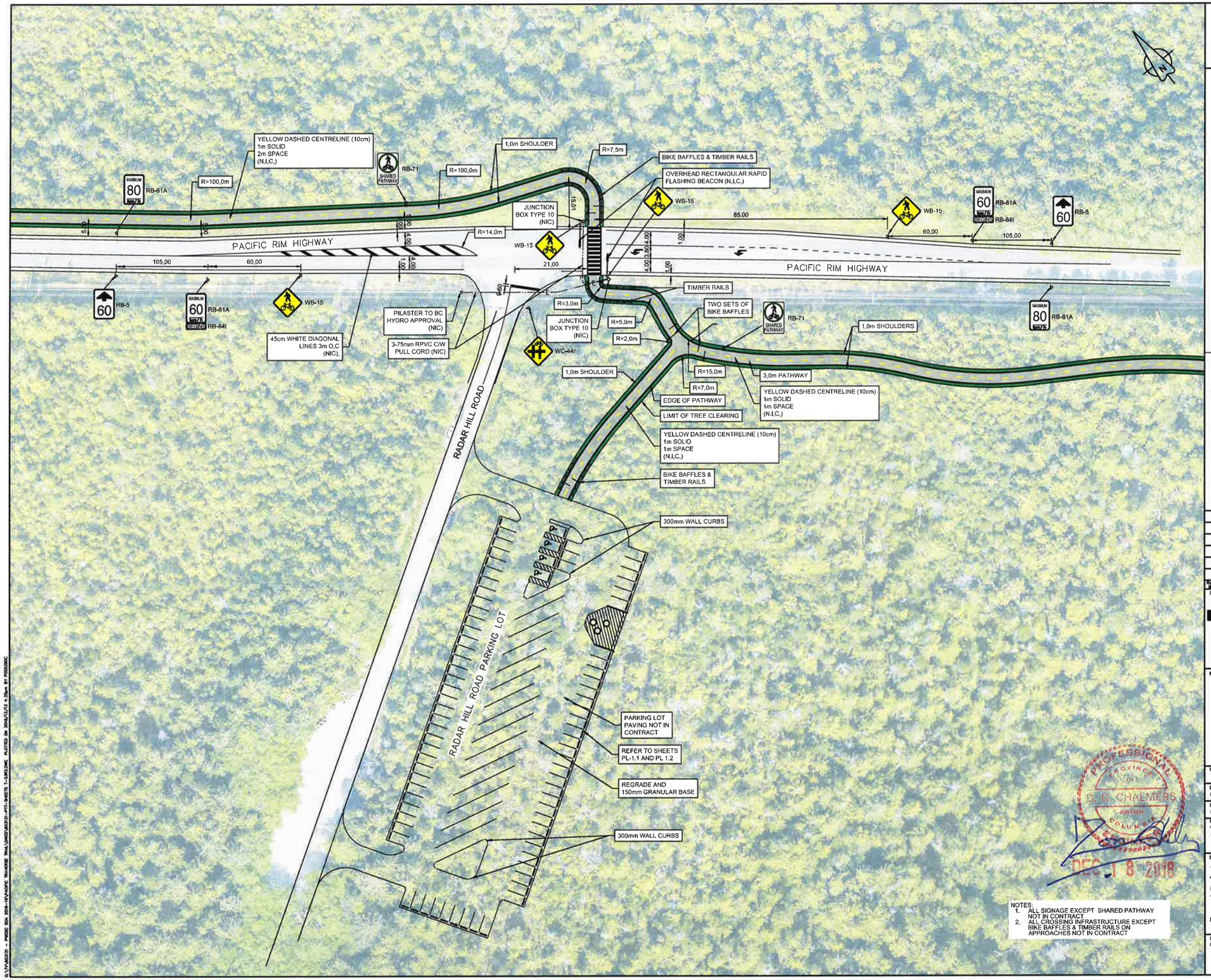

NOTES:
1. ALL SIGNAGE EXCEPT SHARED PATHWAY NOT IN CONTRACT
2. ALL CROSSING INFRASTRUCTURE EXCEPT BIKE BAFFLES & TIMBER RAILS ON APPROACHES NOT IN CONTRACT

Parks Canada Agency / L'Agence Parcs Canada

PARSONS

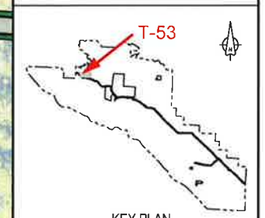

KEY PLAN
N.T.S.

-	----	----
-	----	----
-	----	----
2	ISSUED FOR TENDER	18/12/2018
1	ISSUED FOR TENDER	18/11/2018
0	ISSUED FOR TENDER	27/10/2018
Revision/Révision	Description/Description	Date/Date

Client/client

Parks Canada Agency / L'Agence Parcs Canada

Western and Northern Region / Ouest et Nord du Canada

Project title/Titre du projet

TOFINO

PACIFIC RIM NATIONAL PARK RESERVE

?apsčiik ťasïi (Ups-cheek ta-shee) "Going in the right direction on the trail"

Consultant Signature Only

Designed by/Concept par
DON CHALMERS / 2016-11

Drawn by/Dessine par
DAVID COX / 2016-11

PCA Project Manager/Technical Authority
Administrateur de Projets APC
JACKIE HICKS

Drawing title/Titre du dessin

?apsčiik ťasïi (Ups-cheek ta-shee) "Going in the right direction on the trail"
TRAIL DESIGN

HIGHWAY 4 CROSSING AT RADAR HILL

Project No./No. du projet	Sheet/Feuille	Revision no./La Révision no.
PCA #1522	T-53 OF	2

PMGSC – A1 – 8413584

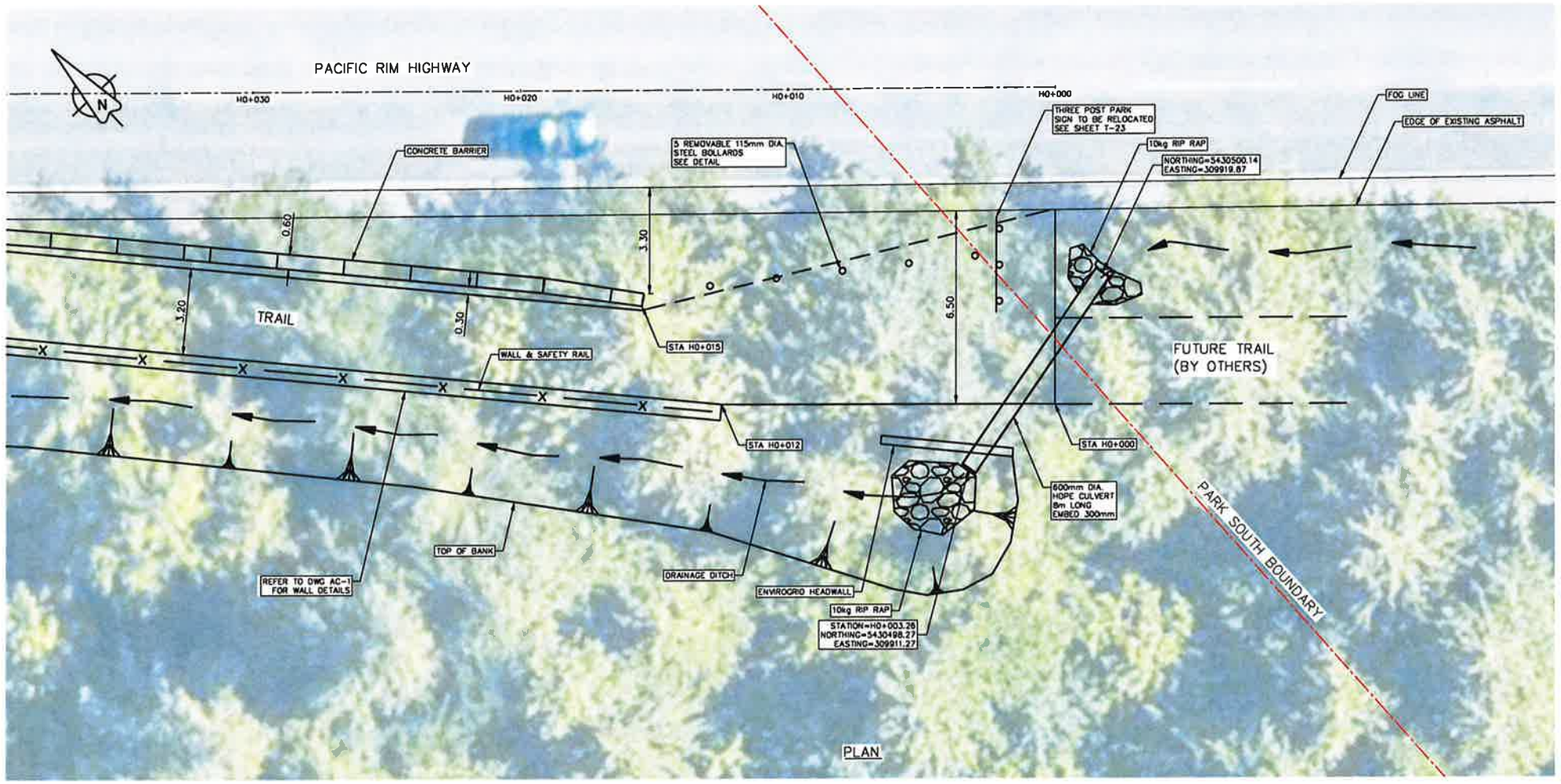

PLAN

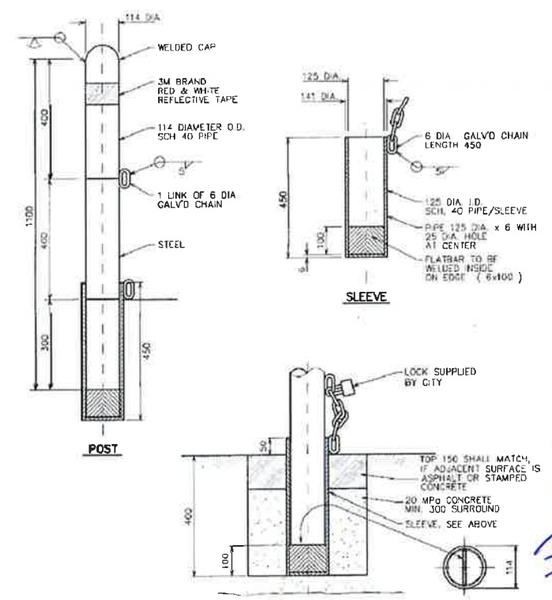

NOTE:
1. FINISH POWDER COATED WHITE.

BOLLARD DETAIL

Parks Canada Agency / L'Agence Parcs Canada

PARSONS

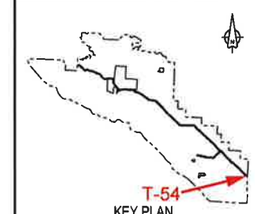

KEY PLAN
N.T.S.

Revision/Révision	Description/Description	Date/Date
-	----	----
-	----	----
-	----	----
-	----	----
2	ISSUED FOR TENDER	18/12/2018
1	ISSUED FOR TENDER	16/11/2018
0	ISSUED FOR TENDER	27/10/2017

Client/client

Parks Canada Agency / L'Agence Parcs Canada

Western and Northern Region / Ouest et Nord du Canada

Project title/Titre du projet
TOFINO

PACIFIC RIM NATIONAL PARK RESERVE
?apsclik tas'ii (Ups-cheek ta-shee) "Going in the right direction on the trail"

Consultant Signature Only

Designed by/Conceptí par
DON CHALMERS / 2016-11

Drawn by/Dessiné par
DAVID COX / 2016-11

PCA Project Manager/Technical Authority
Administrateur de Projets APC
JACKIE HICKS

Drawing title/Titre du dessin
?apsclik tas'ii (Ups-cheek ta-shee) "Going in the right direction on the trail"
TRAIL DESIGN

TRAIL STANDARD TAPER AT PARK BOUNDARY

PROFESSIONAL ENGINEER — PROVINCE OF BRITISH COLUMBIA — D. G. CHALMERS — DEC 18 2018

Project No./No. du projet	Sheet/Feuille	Revision no./Le Révision no.
PCA #1522	T-54 OF	2