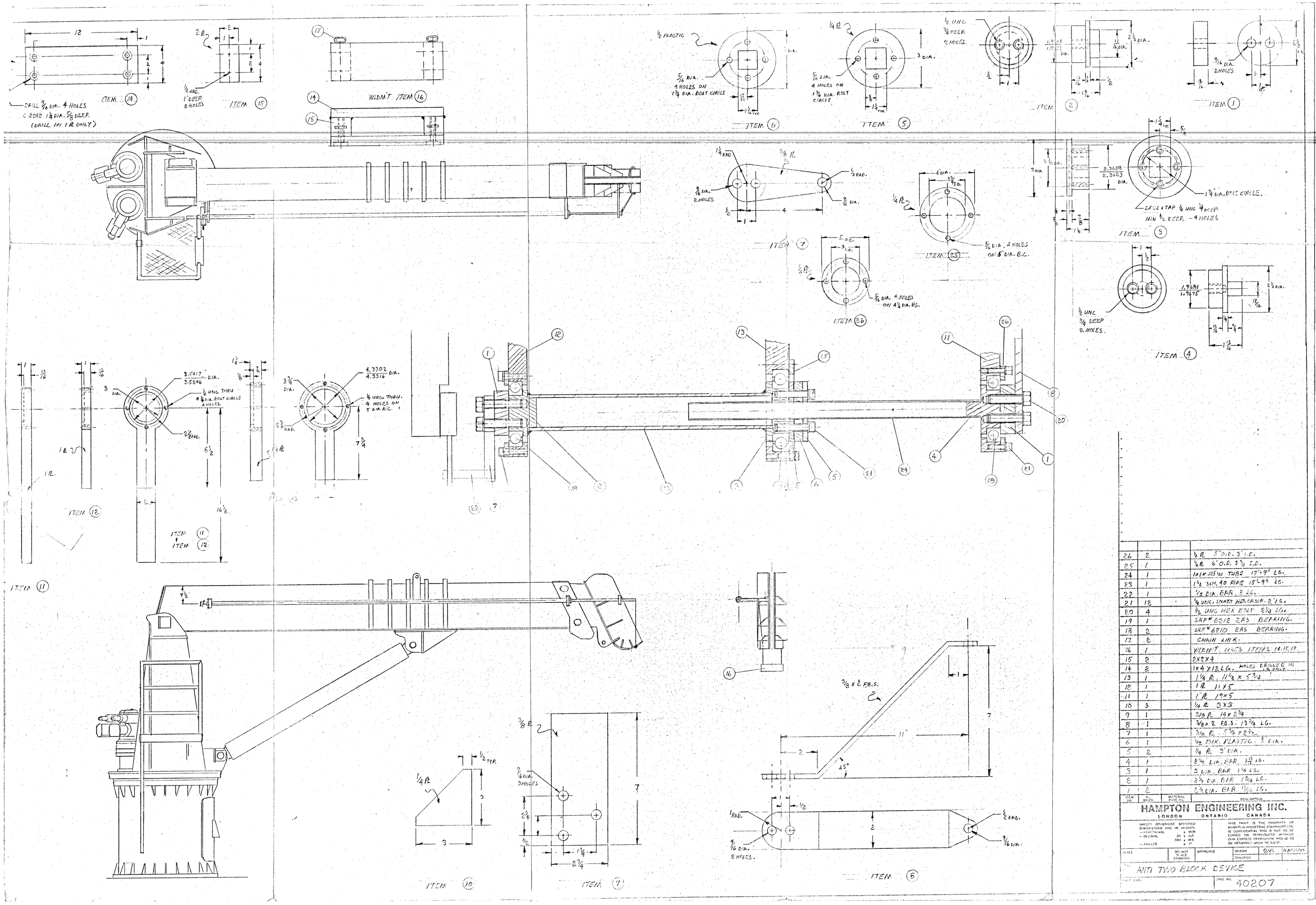

ITEM No.	No. REQD.	MATERIAL PART No.	DESCRIPTION
26	2		1/4 PL 5" O.D. 3" I.D.
25	1		1/4 PL 6" O.D. 3 3/4 I.D.
24	1		1x1x.125 W. TUBE 17'-9" LG.
23	1		1 1/2 SCH. 40 PIPE 15'-9" LG.
22	1		1/2 DIA. BAR 3 LG.
21	12		1/4 UNC. SOCKET HD. CAP SCR. 2 LG.
20	4		1/2 UNC HEX BOLT 2 1/4 LG.
19	1		SKF# 6212 2RS BEARING.
18	2		SKF# 6210 2RS BEARING.
17	2		CHAIN LINK.
16	1		WLDM'T. USES ITEMS 14, 15, 17.
15	2		2X2X4
14	2		1X4X12 LG. HOLES DRILLED IN 1 1/4 ONLY.
13	1		1 1/4 PL 11 1/2 x 5 3/4
12	1		1 PL 11X5
11	1		1 PL 19X5
10	3		1/4 PL 3X3
9	1		3/8 PL 14 x 2 3/4
8	1		3/8 x 2 F.B.S. 13 3/4 LG.
7	1		3/8 PL 5 3/4 x 8 1/2
6	1		1/2 THK. PLASTIC 3 DIA.
5	2		1/4 PL 3" DIA.
4	1		2 1/2 DIA. BAR 1 3/4 LG.
3	1		3 DIA. BAR 1 1/4 LG.
2	1		2 1/2 DIA. BAR 1 9/16 LG.
1	2		2 1/2 DIA. BAR 13/16 LG.

HAMPTON ENGINEERING INC.
LONDON ONTARIO CANADA

UNLESS OTHERWISE SPECIFIED DIMENSIONS ARE IN INCHES.
— FRACTIONAL ± .005
— DECIMAL .XX ± .015
.XXX ± .005
— ANGLES ± 1°

THIS PRINT IS THE PROPERTY OF HAMPTON INDUSTRIAL EQUIPMENT LTD. IS CONFIDENTIAL AND IS NOT TO BE COPIED OR REPRODUCED WITHOUT OUR EXPRESS PERMISSION AND IS TO BE RETURNED UPON REQUEST.

SCALE | DO NOT SCALE DRAWING | APPROVED | DRAWN | CHECKED | APP. | INDEXING

ANTI TWO BLOCK DEVICE

DWG. NO. 40207