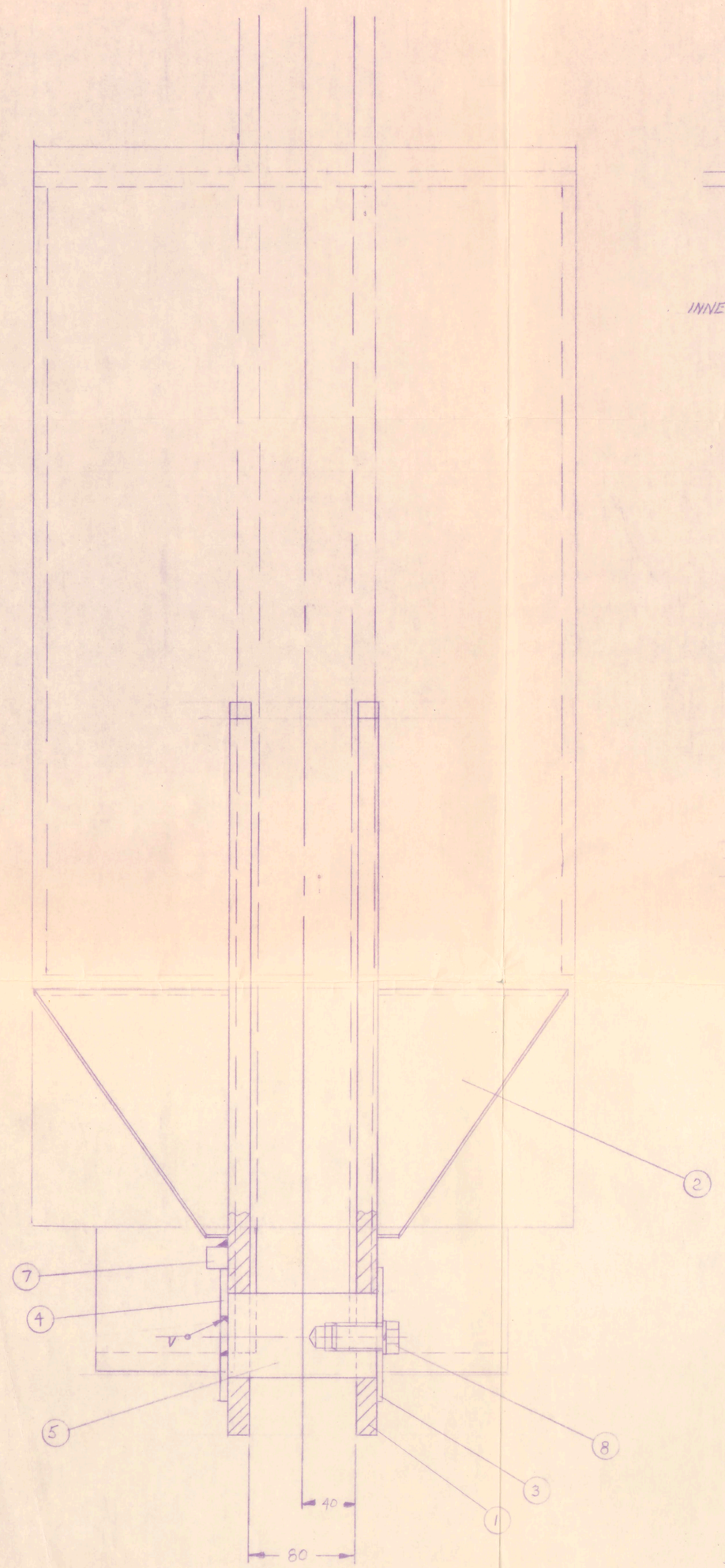

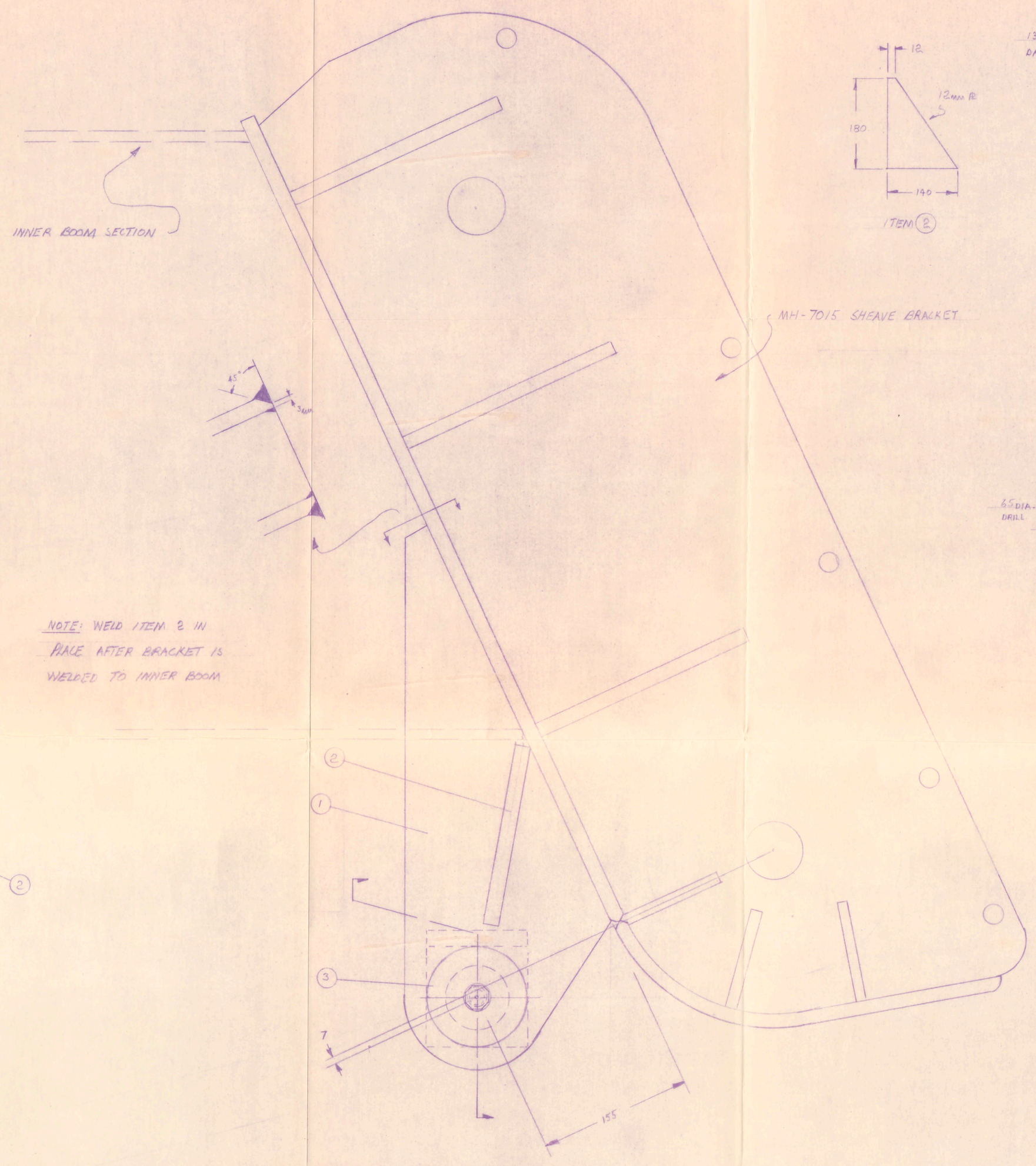

NOTE: WELD ITEM 2 IN PLACE AFTER BRACKET IS WELDED TO INNER BOOM

ITEM 2

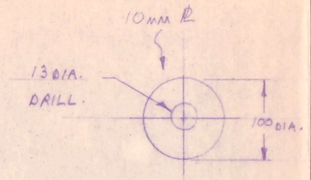

ITEM 3

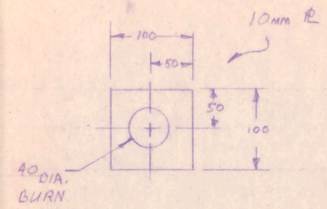

ITEM 4

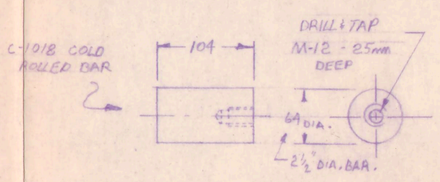

ITEM 5

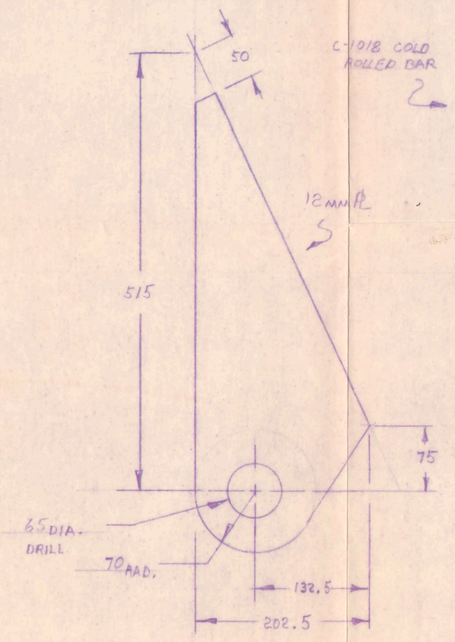

ITEM 1

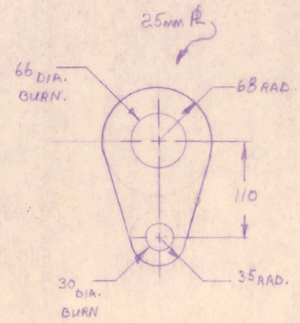

ITEM 6

ITEM NO.	No. REQ'D	MATERIAL PART No.	DESCRIPTION
8	1	K.B.B.	M12 X 25 HEX. BOLT. C/W L.W.
7	1		½ x ½ SQ. BAR: 100 LG.
6	1	C-40-21 GR.50	25 PL 213 X 136
5	1	C-1018	65 DIA. C-1018 - COLD ROLLED. 104 LG.
4	1	"	10 PL 100 X 100
3	1	"	10 PL 100 MM DIA.
2	2	"	12 PL 140 X 180
1	2	GA-21 GR.50A	12MM PL 585 X 203

HAMPTON ENGINEERING INC.
LONDON ONTARIO CANADA

UNLESS OTHERWISE SPECIFIED DIMENSIONS ARE IN INCHES
— FRACTIONAL ± .0625
— DECIMAL .XX ± .005
.XXX ± .005
— ANGLES ± 1°

THIS PRINT IS THE PROPERTY OF HAMPTON INDUSTRIAL EQUIPMENT LTD. IS CONFIDENTIAL AND IS NOT TO BE COPIED OR REPRODUCED WITHOUT OUR EXPRESS PERMISSION AND IS TO BE RETURNED UPON REQUEST.

SCALE: DO NOT SCALE DRAWING | APPROVED | DRAWN: [illegible] | CHECKED | MAY 4/93

TITLE: SHEAVE BRACKET MODIFICATIONS.

ASSY. DWG. | DWG. No. MH-7015 - H5