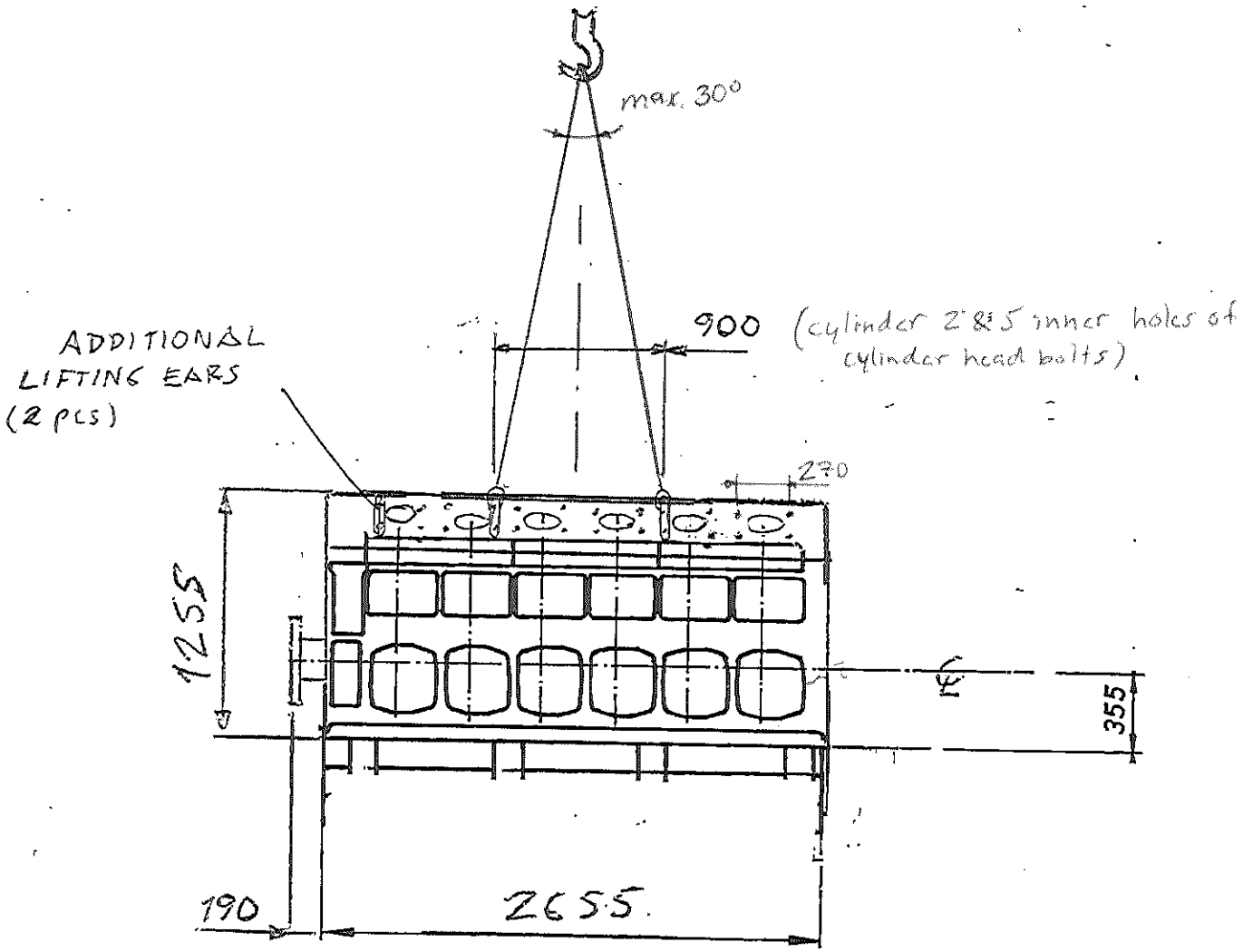
max. 30°
900
(cylinder 2 & 5 inner holes of cylinder head bolts)
ADDITIONAL LIFTING EARS (2 pcs)
270
1255
355
190
2655

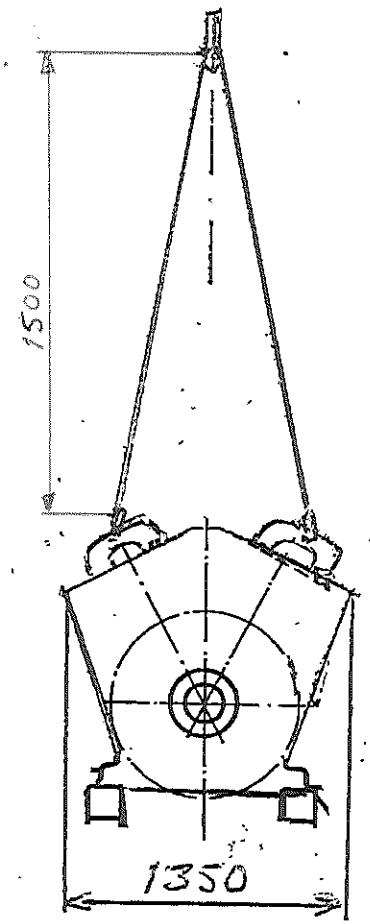
1500
1350