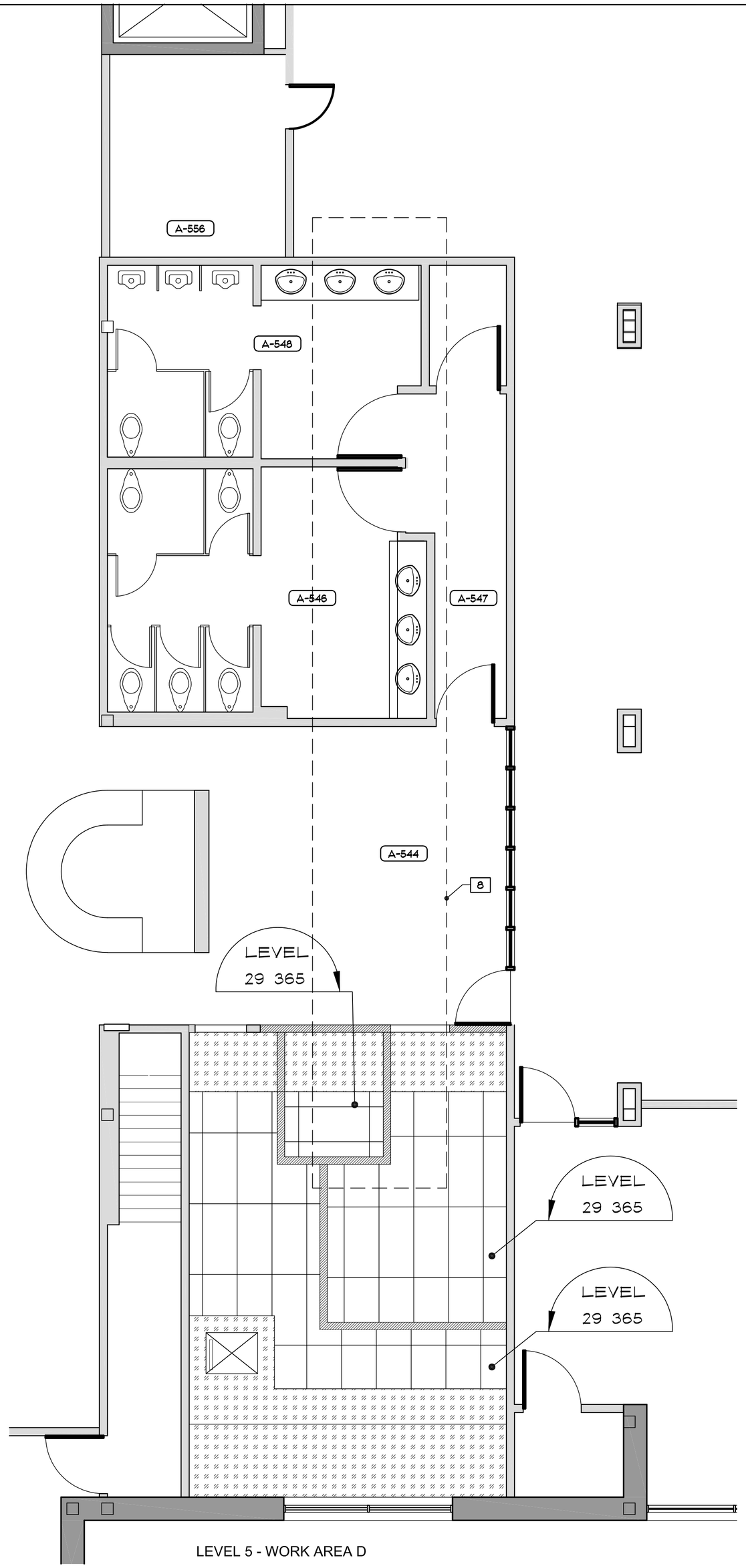

LEVEL 5 - WORK AREA D
REFLECTED CEILING PLAN

SCALE 1:50

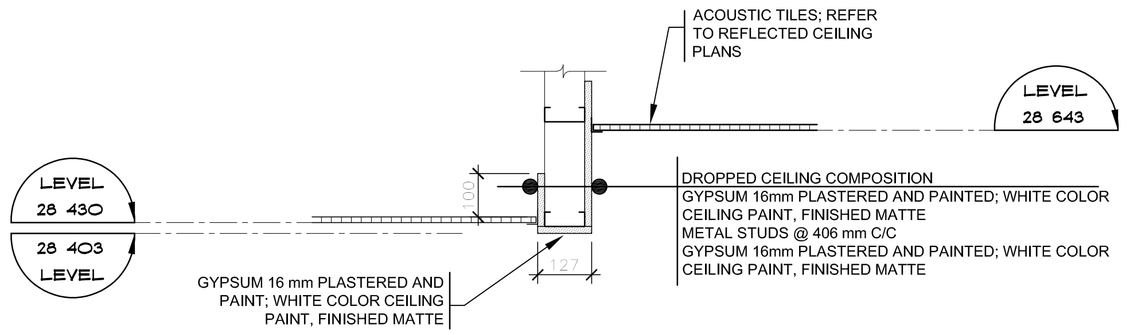

3 / A06 TYPICAL DETAIL
DROPPED CEILING
SCALE: 1:10

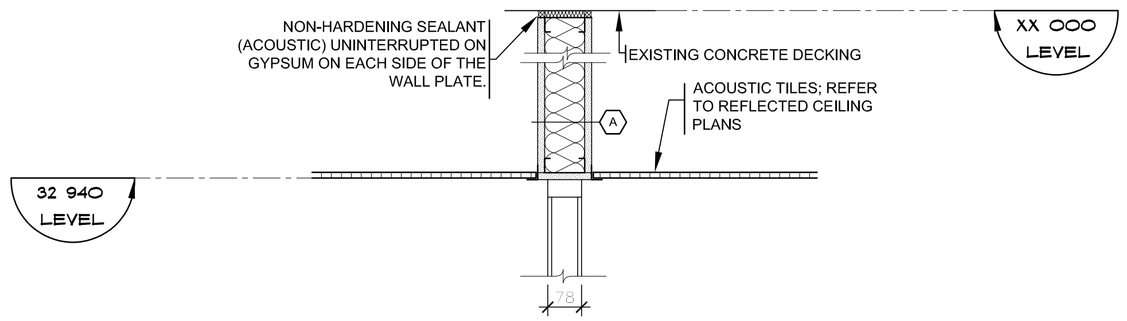

4 / A07 TYPICAL DETAIL
GLAZING PARTITION VS. INTER-CEILING SPACE
ÉCHELLE: 1:10

INTERVENTIONS LIST:

1. DEMOLISH THE EXISTING DOOR. CLOSE THE OPENING WITH A WALL LIKE THE EXISTING AND ADJACENT WALL. PROVIDE FOR THE RESTAURATION OF THE BASEBOARD ON BOTH SIDES OF THE NEW WALL.
2. DEMOLISH EXISTING DOOR, FRAME, HARDWARE AND LATERAL GLAZING TO RELOCATE THEM. CONTRACTOR MUST REFER TO THE FLOOR PLAN FOR THE RELOCATION. SEE DOOR 10
3. DEMOLISH EXISTING DOOR, FRAME AND HARDWARE TO RELOCATE THEM. CONTRACTOR MUST REFER TO THE FLOOR PLAN FOR THE RELOCATION. SEE DOOR 6
4. DEMOLISH THE WALL TO RECEIVE THE NEW FRAME AND/OR LATERAL GLAZING.
5. DEMOLISH EXISTING DOOR, FRAME, HARDWARE AND LATERAL GLAZING TO RELOCATE THEM. CONTRACTOR MUST REFER TO THE FLOOR PLAN FOR THE RELOCATION. SEE DOOR 16
6. DEMOLISH THE EXISTING RUG. PROVIDE FOR THE PREPARATION IN A WAY TO RECEIVE THE NEW CERAMIC.
7. INSTALL NEW DOOR AND NEW HARDWARE IN EXISTING FRAME. CONTRACTOR WILL HAVE TO KEEP A PART OF THE EXISTING WALL ET PROVIDE FOR THE RESTAURATION AND FOR THE PAINTING.
8. APROXIMATIVE CEILING AREA TO DEMOLISH. REMOVE THE TILES AND KEEP THE SUSPENSIONS IN PLACE. THE ENGINEERING WORK WILL HAVE TO BE DONE THROUGH THE SUSPENSIONS. PUT THE SUSPENDED CEILING TILES BACK IN PLACE AFTER THE WORKS.
9. APPROXIMATIVE FLOOR AREA TO DEMOLISH FOR THE PLUMBING WORKS (SEE ENGINEERING PLAN). PROVIDE FOR THE RESTAURATION OF THE SLAB SUSH AS THE TYPICAL CONSTRUCTION DETAIL ON THE ENGINEERING PLAN.
10. PROVIDE FOR THE DEMOLITION OF A SECTION OF THE WALL FOR THE ELECTRICAL AND PLUMBING WORKS (REFER TO THE ENGINEERING PLANS FOR THE WORKS). PROVIDE FOR THE RESTAURATION OF THE SURFACES, PLASTER AND PAINT.
11. THE FOLLOWING ITEMS IN THE BATHROOM OF THE EXISTING INFIRMARY WILL BE DEMOLISH AND REINSTALL IN THE PRESENT PROJECT: HYGIENIC PAPER DISTRIBUTOR, SOAP DISTRIBUTEUR, STAINLESS STEEL SHELF, PAPER/TRASH DISTRIBUTOR INTEGRATED AND DEODORIZING BLOCK. rEFER TO THE EXPENDED PLAN OF THE NEW INFIRMARY'S BATHROOM FOR THE LOCATION OF THE ACCESSORIES.
12. PROVIDE FOR THE REPLACEMENT OF THE HEATING CABINET'S FRAME AFTER THE DEMOLITION OF THE WALL.
13. PROVIDE FOR THE DEMOLITION OF VINYL TILES. TILES CONTAIN CHRYSOTILE ASBESTOS. REFER TO THE SPECIFICATIONS.
14. ALL THE DEMONSTRATED FURNITURE IS INCLUDED IN THE CONTRACT. (REFER TO SPECIFICATIONS)
15. FLOOR COATING TO DEMOLISH. (REFER TO TABLE OF FINISHES AND PLANS OF FINISHES)
16. WALL ACCESS COVER 200 mm X 200 mm IN SATIN STEEL OF SIZE 16 WITH PIANO TYPE CONTINUOUS HINGE. LOCKING WITH FLAT SCREWDRIVERS. EPOXY PRIMER ANTI-CORROSION PRIMER TO BE PAINTED IN THE SAME COLOR AS THE ADJACENTS WALL. COORDINATE INSTALLATION HEIGHT WITH PLUMBING.
17. CONTRACTOR WILL HAVE TO INSTALL ADDITIONNAL TEMPORARY PROTECTION DURING WORK TO SEAL THE DOORS LARDING TO THE SERVER ROOM.

Pêches et Océans Canada
Fisheries and Oceans Canada
Biens Immobiliers, de l'Environnement, de la Sécurité et de la Santé (BIESS)
The Real Properties Assets, Environment, Safety and Security (RPESS)
104, rue Dalhousie Québec, Qc G1K 7Y7
104, Dalhousie Street Québec, Qc G1K 7Y7

F3766-170169

REORGANIZATION LEGEND

- EXISTING WALL TO PRESERVE OR TO MODIFIE
- NEW WALL TO BUILD OR WALL UP THE OPENING LIKE THE EXISTING AND DO THE NECESSARY REWORKS
- EXISTING WALL OR COMPOSITION TO DEMOLISH

CEILING FINISHES LEGEND:

- NEW SUSPENDED CEILING (SEE COST ESTIMATE).
- APPROXIMATIVE AREA FOR CEILING RESTORATION. THE BASIS HAS TO FOLLOW THE EXISTING ONE.
- EXISTING CEILING TO PRESERVE.
- EXISTING DROPPED CEILING GYPSUM TO PAINT (COLOR ACCORDING TO THE REPRESENTATIVE OF THE MINISTRY).
- NEW FALLOUT GYPSUM (SEE CONSTRUCTION DETAIL XX/XX)

NOTE:
- 5TH FLOOR'S LEVEL IS AT 25 900
- 6TH FLOOR'S LEVEL IS AT 30 400

Ordre des architectes du Quebec
3201
LUC GAUTHIER
ARCHITECTE

FOR SUBMISSION

Révision	Description	Par/By	Date
00	POUR SOUMISSION	EMPV	2019-03-08

A: Numéro du détail (Detail no.)
B: Feuille sur laquelle le détail est référé (Location drawing no.)
C: Feuille sur laquelle le détail est dessiné (Drawing no.)

Toute modification doit être rapportée à:
All modification must be reported to:
Biens Immobiliers, Environnement, Sécurité et Santé
104, Dalousie, Québec, Qc G1K 7Y7

Dossier: File:
MONT-JOLI
MAURICE-LAMONTAGNE BUILDING
GIST/SPC REORGANIZATION

Dessin: Drawing:
LEVEL 5 - WORK AREA D
CEILING PLAN AND DETAILS

		Date
Conçu par: Designed by:	L. Gauthier	2017-12-01
Dessiné par: Drawn by:	E-M Poulin-Vallières	2019-01-09
Vérifié par: Verified by:	L. Gauthier	2019-01-09
Approuvé par: Approved by:	L Gauthier	2019-01-09

No. dossier: File no.: F3766-170169
Échelle: Scale: Indicated
No. dessin: Drawing no.:
No. feuille: Sheet no.: A09 de 13

AutoCAD A1 2019-03-08 09:00
F3766-170169