Public Works and Government Services Canada | Travaux publics et Services gouvernementaux Canada

RETURN BIDS TO:
RETOURNER LES SOUMISSIONS À:
Bid Receiving - PWGSC / Réception des soumissions - TPSGC
11 Laurier St. / 11, rue Laurier
Place du Portage , Phase III
Core 0B2 / Noyau 0B2
Gatineau, Québec K1A 0S5
Bid Fax: (819) 997-9776

SOLICITATION AMENDMENT
MODIFICATION DE L'INVITATION

The referenced document is hereby revised; unless otherwise indicated, all other terms and conditions of the Solicitation remain the same.

Ce document est par la présente révisé; sauf indication contraire, les modalités de l'invitation demeurent les mêmes.

Comments - Commentaires

Vendor/Firm Name and Address
Raison sociale et adresse du fournisseur/de l'entrepreneur

Issuing Office - Bureau de distribution
Science Procurement Directorate/Direction de l'acquisition de travaux scientifiques
Terrasses de la Chaudière, 4th Flo
10 Wellington Street
Gatineau
Quebec
K1A 0S5

Title - Sujet Lunar Gateway Robotics - Canadarm3	
Solicitation No. - N° de l'invitation 9F052-190271/A	**Amendment No. - N° modif.** 002
Client Reference No. - N° de référence du client 9F052-190271	**Date** 2019-08-27
GETS Reference No. - N° de référence de SEAG PW-$$ST-004-36696	
File No. - N° de dossier 004st.9F052-190271	**CCC No./N° CCC - FMS No./N° VME**
Solicitation Closes - L'invitation prend fin **at - à 02:00 PM** **on - le 2019-12-31**	**Time Zone** **Fuseau horaire** Eastern Standard Time EST
F.O.B. - F.A.B. Specified Herein - Précisé dans les présentes **Plant-Usine:** ☐ **Destination:** ☐ **Other-Autre:** ☑	
Address Enquiries to: - Adresser toutes questions à: Bergeron, Bruno	**Buyer Id - Id de l'acheteur** 004st
Telephone No. - N° de téléphone (450) 926-4562 ( )	**FAX No. - N° de FAX** ( ) -
Destination - of Goods, Services, and Construction: **Destination - des biens, services et construction:** See herein	

Instructions: See Herein

Instructions: Voir aux présentes

Delivery Required - Livraison exigée	**Delivery Offered - Livraison proposée**
Vendor/Firm Name and Address **Raison sociale et adresse du fournisseur/de l'entrepreneur** **Telephone No. - N° de téléphone** **Facsimile No. - N° de télécopieur**	
Name and title of person authorized to sign on behalf of Vendor/Firm (type or print) **Nom et titre de la personne autorisée à signer au nom du fournisseur/ de l'entrepreneur (taper ou écrire en caractères d'imprimerie)** **Signature** **Date**	

Canada

Canadarm3

Industry Day 1
Webinar

Public Services and Procurement Canada | Services publics et Approvisionnement Canada

Canadian Space Agency | Agence spatiale canadienne

Canada

CANADARM3: Webinar Agenda

Time	Item	Presenter
13h00 – 13h05	Welcome	
13h05 – 13h10	Gateway and Canadarm3 Background	Stéphane Desjardins, CSA
13h10 – 13h25	Canadarm3 High-Level Requirements	Daniel Rey, CSA
13h25 – 13h35	Engagement and agile procurement approach	Bruno Bergeron, PSPC

Webinar – Canadarm3

- The intent of this webinar is to provide information to industry on Canadarm3

- Questions:
  - Participants may reserve questions for a one-on-one briefing, or submit them directly to the PSPC Procurement Authority (bruno.bergeron@tpsgc-pwgsc.gc.ca)

- Briefings:
  - Electronic copies of the briefings will be posted on buyandsell.gc.ca following the webinar

Context

On February 28, 2019, the Government announced a historic investment in Canada's Space Program committing $1.9 billion over 24 years to design, build and operate a next-generation robotic system on the Lunar Gateway, a small outpost orbiting the Moon.

Canada is requesting feedback in order to better understand the capabilities within industry and academia and how to best leverage this procurement to ensure strong economic benefits for Canadians.

Industry engagement

- Industry Engagement activities will be used to give vendors an overview of the Gateway Robotics System Concept and support Canada in the development of key requirements, sourcing strategies and project timelines optimization.

Lunar Gateway

- Canadian Space Agency is working with other agencies to define the next steps for human spaceflight exploration

- Canada has played a pivotal role in Low Earth Orbit human spaceflight, with Canadarm on the Space Shuttle, and Canadarm2/Dextre on the International Space Station

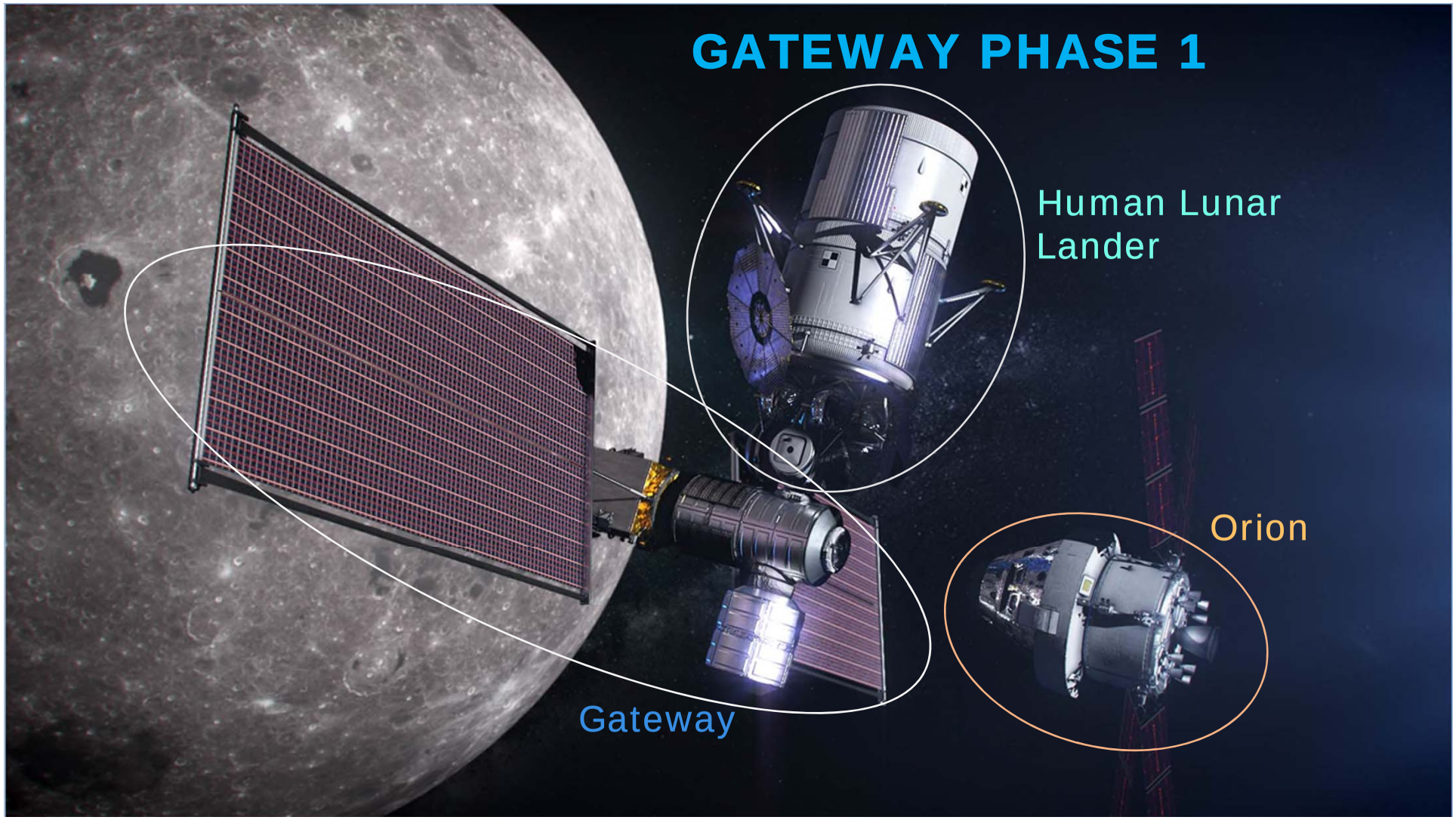
GATEWAY PHASE 1
Human Lunar Lander
Orion
Gateway

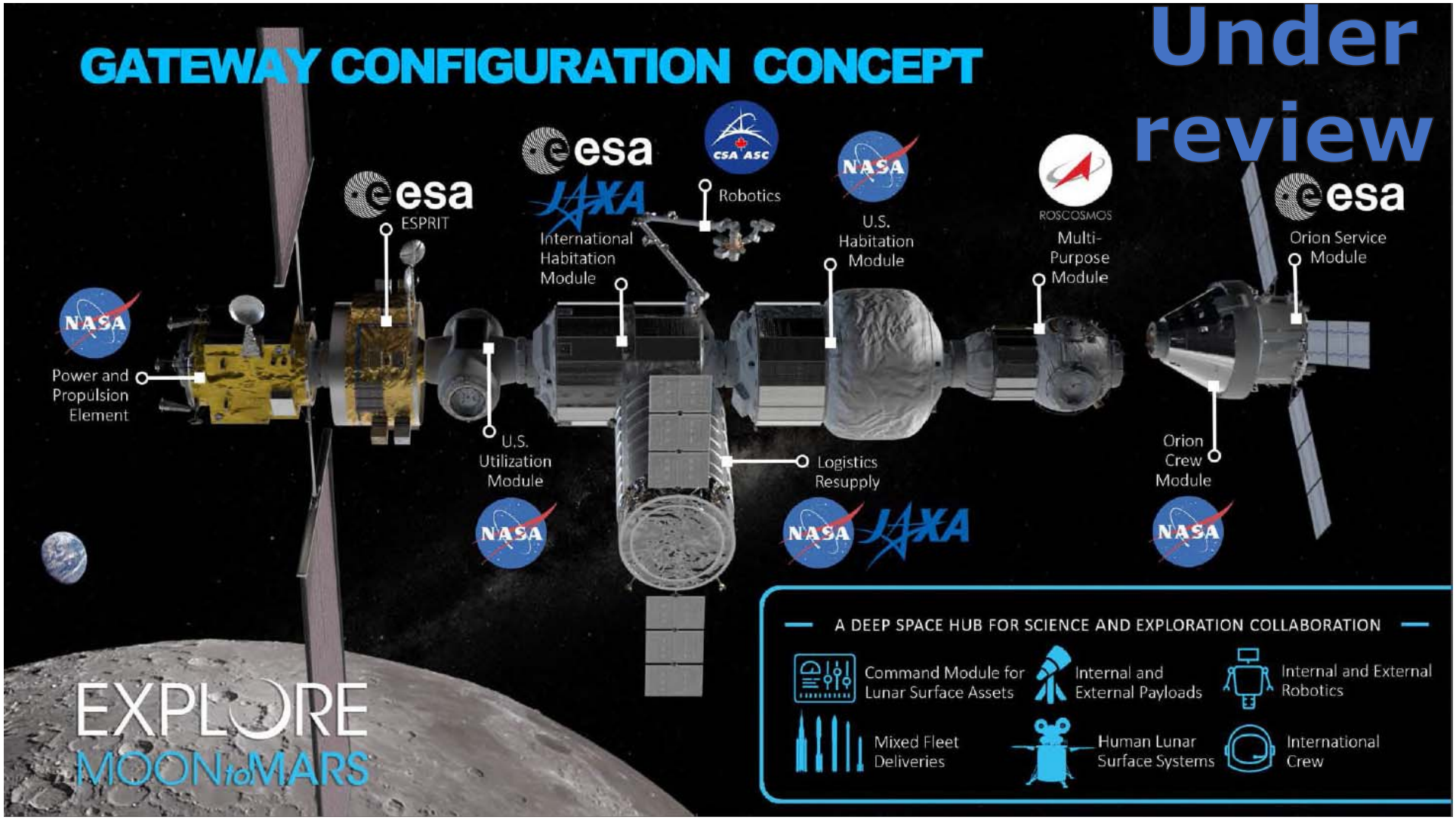
GATEWAY CONFIGURATION CONCEPT
Under review
esa
ESPRIT
esa
JAXA
International Habitation Module
CSA ASC
Robotics
NASA
U.S. Habitation Module
ROSCOSMOS
Multi-Purpose Module
esa
Orion Service Module
NASA
Power and Propulsion Element
U.S. Utilization Module
Logistics Resupply
Orion Crew Module
NASA
NASA JAXA
NASA
A DEEP SPACE HUB FOR SCIENCE AND EXPLORATION COLLABORATION
Command Module for Lunar Surface Assets
Internal and External Payloads
Internal and External Robotics
Mixed Fleet Deliveries
Human Lunar Surface Systems
International Crew
EXPLORE
MOON to MARS

Canadian Contribution – Canadarm3

- Canada's contribution to the Gateway is an artificial intelligence (AI)-enabled Robotics system (Canadarm3) that will be operated from Canada for 15 years

- Budget: Canada is investing $1.9B over 24 years to design, build and operate the Canadarm3 system
  - This is the complete life cycle cost and includes project cost, operation cost, overall contingency over the life of the project and during operation and government cost

- Schedule: Launch in 2026 or earlier

Concept Overview – Canadarm3

- The eXploration Large Arm and its Tools
  - Provide external robotic functions for Gateway
- The eXploration Dexterous Arm (small arm)
  - Enhance the capabilities of the large arm and perform its maintenance, capable of supporting payload exchanges, possibly through a Gateway airlock
- Standard Robotic Interface Fixtures, Platforms and Receptacles
  - Provide robotic bases for the two arms, provide worksites and stowage capability for experiments and equipment

Canadarm3 Concept
Industry solutions pending

- Ground Segment (GS), Robotic Integration and Operations
  - Ground infrastructure that will provide planning, monitoring, commanding, and visualization functions in support of operating the Robotics system from Canada and provide training to ground controllers and crew
  - Professional services to integrate robotic interfaces across Gateway systems, and professional services for operation and sustaining engineering of Canadarm3
- Artificial Intelligence (AI) – Autonomy Capabilities
  - Autonomy and AI-driven operations are needed to achieve a much higher level of self-reliance and efficient operations

Canadarm Evolution

Canada is seeking to expand and/or spin-in capabilities and generate enablers for commercialization.

Enablers	Canadarm	Canadarm2	Canadarm3
Capture of spacecraft	✓	✓	✓
Assembly/maintenance	✓	✓	✓
Collaborative human-robot operations	✓	✓	✓
Safety and Mission critical operations	✓	✓	✓
Handling, operating and using tools		✓	✓
Ground Control		✓	✓
Accurate motion and contact operations		✓	✓
Self-relocatable		✓	✓
Sense of touch		✓	✓
Self-deployable			✓
Reconfigurable and on-site repair			✓
Enhanced situational awareness			✓
Autonomous planning and operations			✓
Standard Robotic Interfaces			✓

Canadarm3 - Autonomy

- The following factors drive the need for Canadarm3 to be capable of varying levels of autonomy from Manual to Autonomous through increasing levels of automation:
  - Progressive commissioning and validation of autonomy and AI
  - The Gateway will have low (30 days/year) crew presence for direct control of the robotics
  - The Gateway distance from Earth implies time-delays that make direct control from the ground impractical
  - The Gateway will have periods of minimal communications capability, and robotics may be needed to execute in those periods
  - A deep space goal for Gateway is to demonstrate autonomy from Earth for at least 21 days
  - Operational efficiencies via autonomy

Canadarm3 - Key Requirements

Canadarm3 shall provide the following functionalities to Gateway:

- inspection,
- installation, removal & replacement of equipment and experiments,
- transfer of systems through the science airlock,
- off-loading & re-loading of logistics vehicles,
- free-flying vehicle capture and release,
- lunar and planetary element assembly and mission equipment transfer,
- berthing & unberthing of modules and vehicles,
- crew commanded assistance to extravehicular activities (EVA).

Canadarm3 - Key Requirements (cont.)

- The Gateway robotics have to:
  - survive launch and transit, and operate in the Gateway deep-space environment
  - deploy from the launch (stowed) configuration without EVA support
  - be maintainable in-situ without EVA support
  - operate safely (e.g. no single failure can endanger crew or the Gateway vehicle)
    - Drives need for model verification, situational awareness and proximity sensing
  - manipulate objects contaminated with lunar dust

Canadarm3 – Robotic Interfaces

- Gateway experiments and equipment will be on robotically-compatible installations
  - CSA will procure and provide initial interface equipment for Gateway through the Gateway External Robotic Interfaces Project (GERI)
  - Additional interfaces will be needed, e.g. for larger payloads or payloads requiring fluid transfer
  - Supporting structures will be required for tool and payload stowage, relocation and utilization
  - Integration services for robotic interfaces will be required for Gateway program

Canadarm3 - Operational Requirements

- Ground operators and Flight Crew
  - Can both control the robotics
  - Both need situational awareness
- Robotics operations need to be planned for efficiency and safety:
  - Planning and operational tools must be efficient (especially for crew) and verify safety
- Operators and Crew need to be trained
  - Crew may need training updates in flight.

Canadarm3 - Gateway Requirements

- Canadarm3 will need to meet Gateway mass and power budgets
  - Nominal flight system: 1600 kg
  - Launch package: 2200 kg
  - Large arm operational peak power: 2kW
- Canadarm3 will need to meet Gateway program system requirements, sub-system specifications (power, avionics, thermal, software, etc.) and design standards.

Canadarm3 – Notional System Overview

based on the Concept Study

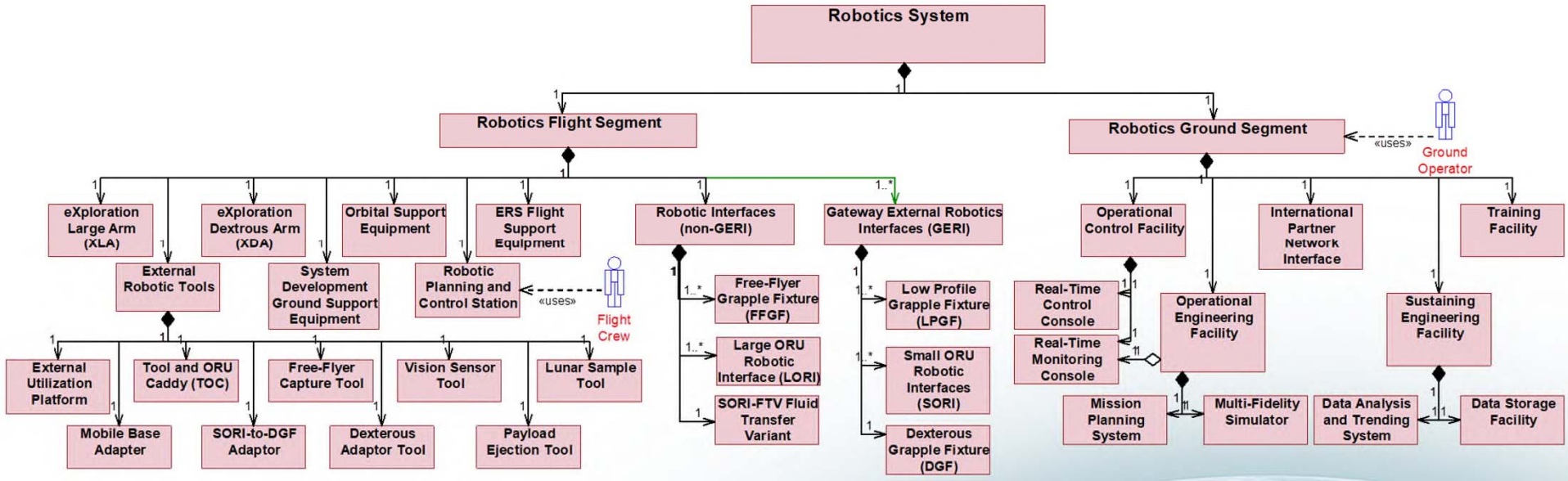

Canadarm3 – AI Application Areas

- Architecture Application Areas
  - Situational Awareness (sense)
  - Task Planning (reason)
  - Task Execution (act)

- Lifecycle Application Areas
  - Engineering
  - Predictive Maintenance & Troubleshooting
  - Training
  - Public Relations
  - Big Data Handling
    (Telemetry, Inspection Data, …)

Engagement and Agile Procurement Approach

Guiding Procurement Principles

- Agile in approach
- Extensive collaboration and co-design
- Fair, transparent and competitive processes
- Foster Canadian space industry diversification and ensure innovation, economic and public benefits for Canada

Agile Procurement

- **Iterative** approach for deliverables, allowing for off ramps and pivots.
- Focus on **outcomes**, allowing for a range of solutions to be proposed.
- **Cross-functional teams** are involved in designing and running the procurement.
- **Collaborative approach** with suppliers, collaborative industry dialogue on needs and outcomes.

Agile Industry Engagement

Formal Events

Industry Day
Aug 2019

Industry Fair
Sept 2019

RFP Release
Early 2020
or sooner

Draft Document Review

Document Review
Fall 2019

Draft RFP Review
Late Fall 2019

Ongoing Parallel Discussions

One-on-one meetings
Until RFP release

Vendor Questions
Until RFP release

Proposed Procurement Strategy

Contractor selection for all subsequent phases based on best value (may include an economic benefit strategy)

Engagement with Industry → RFP for Phase A1 → Phase A1 Contractors → Continuation of Phases

Selection criteria:
- Capacity
- Experience

Scope:
- Develop Mission Concept, System definition based on top level requirements
- Develop **Economic Benefit Plan***

Scope:
- Requirement Definition, Design, Manufacturing

*Economic Benefit Plan could include, but not be limited to the following elements:

Conceptual design and cost estimates, approach to IP management, technology transfer and commercialization plan, R&D investment, risk management plan, experience and capacity to deliver on timelines, industry contribution, contractual approach, and ensuring Canadian content, and may include innovative approaches similar to the Industrial and Technological Benefits Policy's Value Proposition.

For More Information

- All enquiries and other communications related to this Industry Engagement process shall be directed exclusively to the PSPC Procurement Authority: Bruno Bergeron (Supply Manager, PSPC) bruno.bergeron@tpsgc-pwgsc.gc.ca

- For general information on how to do business with the Government of Canada: Office of Small and Medium Enterprises (OSME) bpmeclient.osmeclient@tpsgc-pwgsc.gc.ca

- For all procurement and engagement notices: www.buyandsell.gc.ca