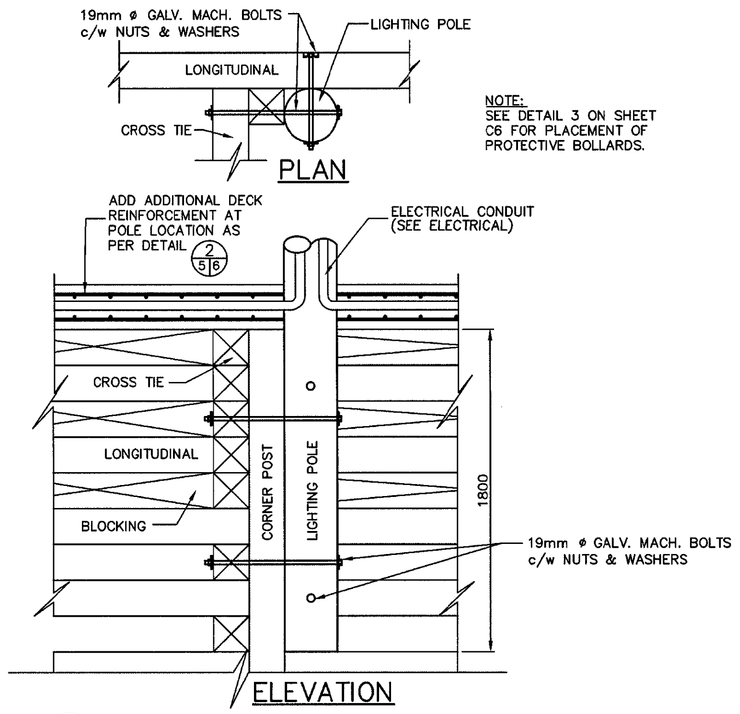

NOTE:
SEE DETAIL 3 ON SHEET C6 FOR PLACEMENT OF PROTECTIVE BOLLARDS.

1/5|5 POLE DETAIL

SCALE: 1:20

0mm 500mm 1000mm 1500mm 2000mm 2500mm

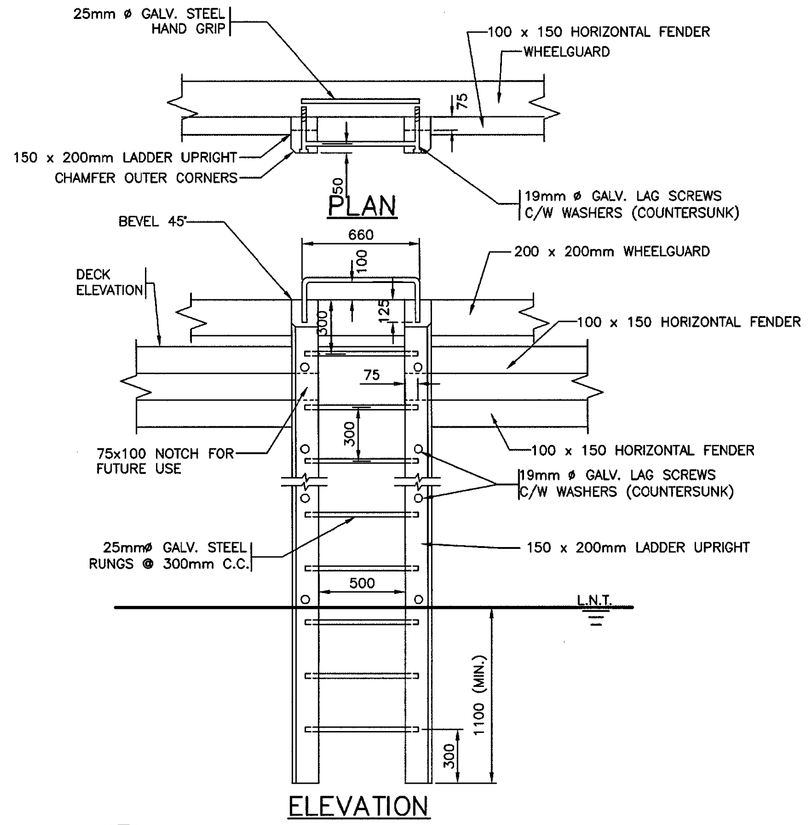

5/5|5 LADDER DETAIL

SCALE: 1:20

0mm 500mm 1000mm 1500mm 2000mm 2500mm

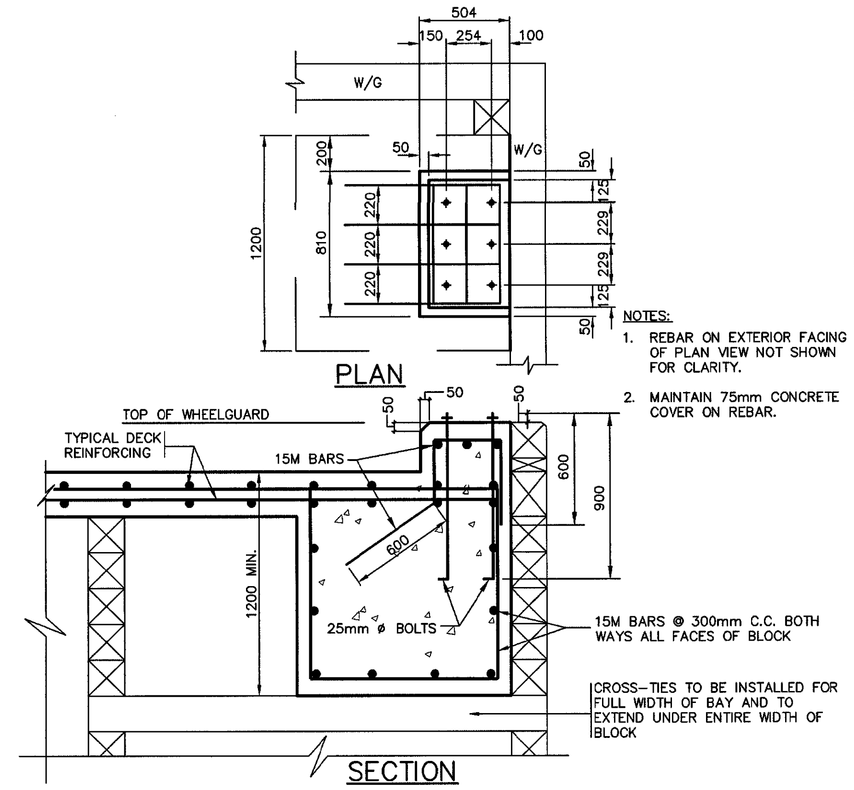

NOTES:

1. REBAR ON EXTERIOR FACING OF PLAN VIEW NOT SHOWN FOR CLARITY.
2. MAINTAIN 75mm CONCRETE COVER ON REBAR.

9/5|5 TYPE "A" CLEAT BLOCK DETAIL

SCALE: 1:20

0mm 500mm 1000mm 1500mm 2000mm 2500mm

NOTES

1. ALL DIMENSIONS IN MILLMETRES UNLESS SPECIFIED OTHERWISE.
2. ALL ELEVATIONS IN METRES.
3. DO NOT SCALE FROM DRAWINGS, USE DIMENSIONS AS SHOWN.
4. MINUMUM CONCRETE STRENGTH 35 MPa @ 28 DAYS.
5. REINFORCING STEEL YIELD STRENGTH 400 MPa.
6. REINFORCING STEEL SPLICES SHALL CONFORM TO A23.3, LATEST EDITION AND AS INDICATED BELOW:
   A. STRUCTURAL DECK:
      – 20M = 700mm LAP
      – 15M = 500mm LAP
   B. ALL OTHER AREAS:
      – 20M = 850mm LAP
      – 15M = 650mm LAP
7. ALL REBAR TO HAVE MIN. COVER OF OF 75mm UNLESS OTHERWISE NOTED.

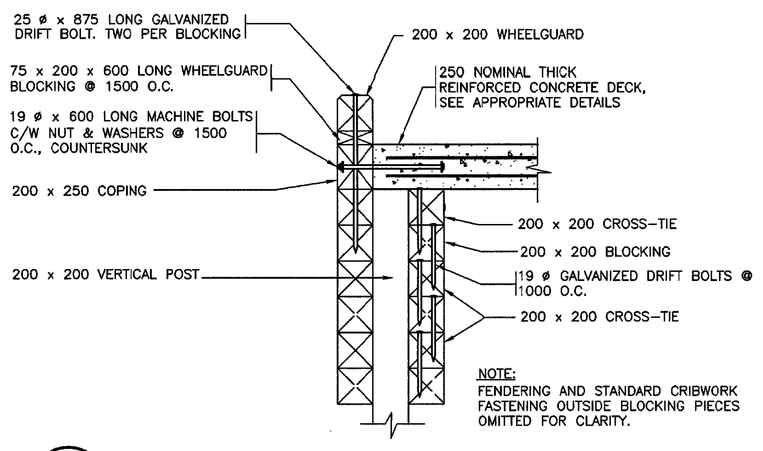

NOTE:
FENDERING AND STANDARD CRIBWORK FASTENING OUTSIDE BLOCKING PIECES OMITTED FOR CLARITY.

2/3|5 END OF WHARF BLOCKING

SCALE: 1:20

0mm 500mm 1000mm 1500mm 2000mm 2500mm

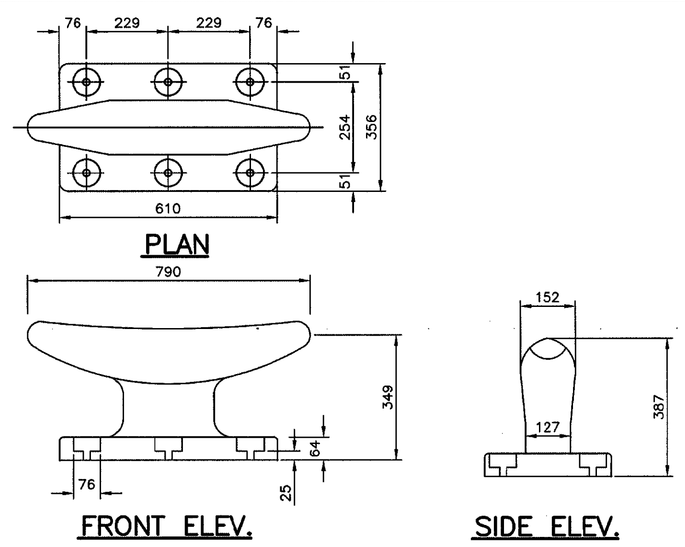

6/5|5 TYPE "A" CLEAT

SCALE: 1:10

0mm 100 200 300 400 500 600 700 800 900 1000mm

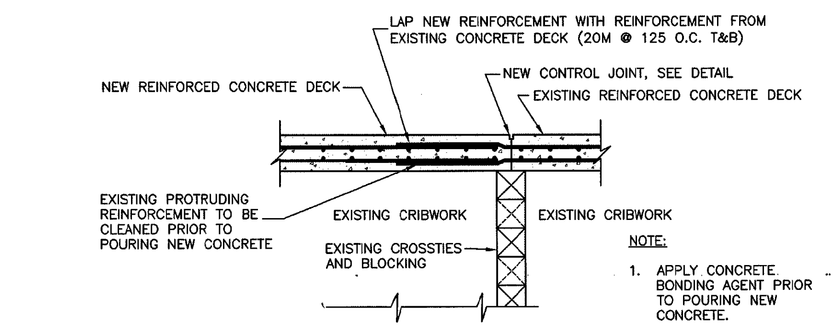

NOTE:

1. APPLY CONCRETE BONDING AGENT PRIOR TO POURING NEW CONCRETE.

10/3|5 NEW AND EXISTING CONCRETE DECK INTERFACE DETAIL

SCALE: 1:25

0mm 500mm 1000mm 1500mm 2000mm 2500mm

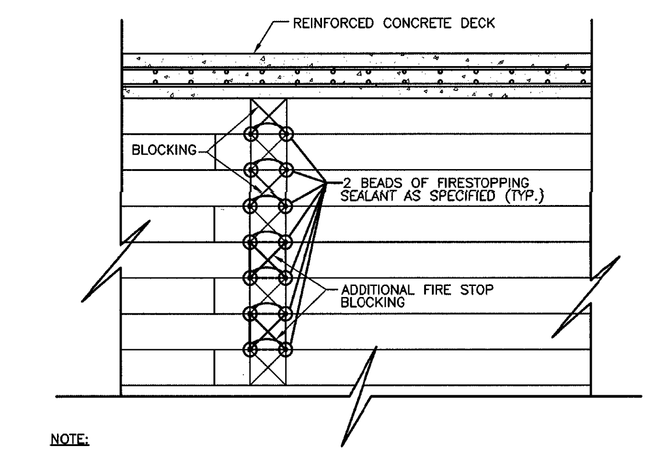

NOTE:

1. 2 BEADS OF SILICONE FIRESTOPPING SEALANT ARE TO BE PLACED BETWEEN EACH TIMBER JOINT FOR THE FULL WIDTH & HEIGHT OF THE FIRE SEPARATOR AS SPECIFIED. SEALANT TO BE SUITED FOR USE ON WOOD IN A WET ENVIRONMENT WITH 1.5 HOUR FIRE RATING.

3/5|5 FIRE SEPARATOR

SCALE: 1:20

0mm 500mm 1000mm 1500mm 2000mm 2500mm

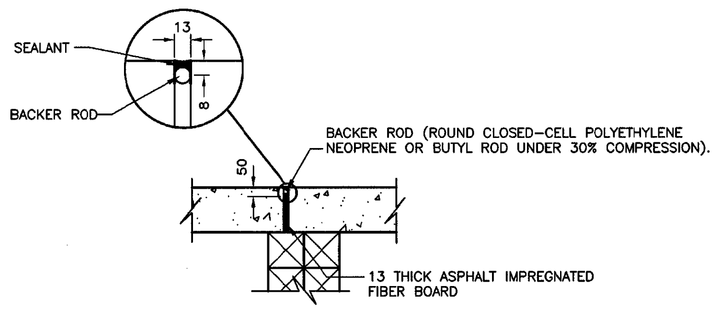

7/5|5 TYPICAL EXPANSION JOINT DETAIL

SCALE: 1:20

0mm 500mm 1000mm 1500mm 2000mm 2500mm

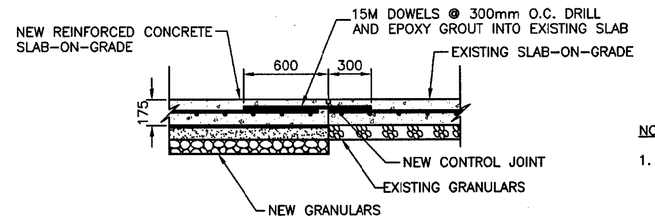

NOTES:

1. DRILL AND DOWEL 15M DOWELS, AS DETAILED, INTO EXISTING CONCRETE SLAB-ON-GRADE AT CRIB #1 CONCRETE DECK INTERFACE.
2. APPLY CONCRETE BONDING AGENT PRIOR TO POURING NEW CONCRETE.

11/2|5 NEW SLAB-ON-GRADE TIE-IN

SCALE: 1:25

0mm 500mm 1000mm 1500mm 2000mm 2500mm

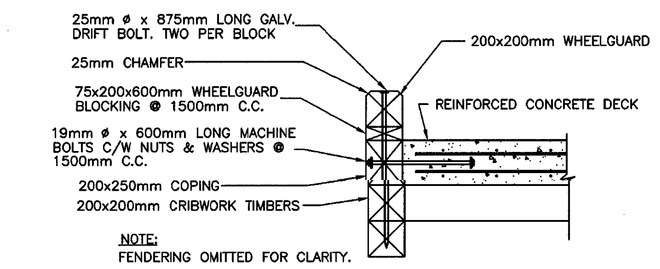

NOTE:
FENDERING OMITTED FOR CLARITY.

4/4|5 WHEELGUARD AND COPING DETAIL

SCALE: 1:20

0mm 500mm 1000mm 1500mm 2000mm 2500mm

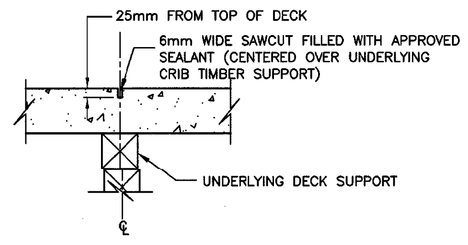

8/5|5 TYP. CONTROL JOINT DETAIL

SCALE: 1:20

0mm 500mm 1000mm 1500mm 2000mm 2500mm

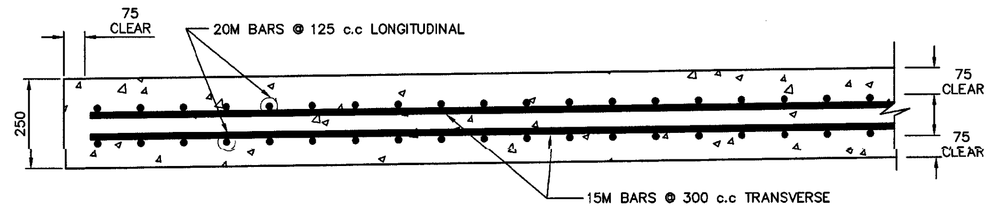

12/3|5 12/4|5 REINFORCED CONCRETE DECK

SCALE: 1:10

0mm 100 200 300 400 500 600 700 800 900 1000mm

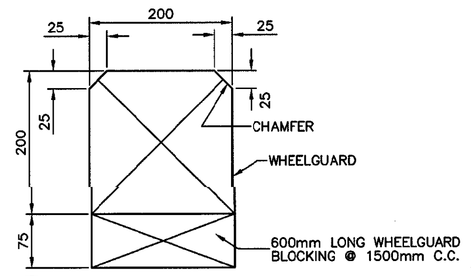

13/5|5 WHEELGUARD SECTION

SCALE: 1:5

0mm 100mm 200mm 300mm 400mm 500mm

Pêches et Océans Canada

SMALL CRAFT HARBOURS

REGISTERED PROFESSIONAL ENGINEER
PEGL Newfoundland and Labrador
CHARLES FISHER
19/08/02
NEWFOUNDLAND & LABRADOR

PROVINCE OF NEWFOUNDLAND AND LABRADOR
PEGL Newfoundland and Labrador
PERMIT HOLDER
This Permit Allows
Meridian Engineering Inc.
Member No. 06255
To practice Professional Engineering in Newfoundland and Labrador.
Permit No. as issued by PEG N0453
which is valid for the year 2019.

revisions		date
D	ISSUED FOR TENDER	19/08/02
C	ISSUED FOR 99% REVIEW	19/07/24
B	ISSUED FOR 66% REVIEW	19/06/21
A	ISSUED FOR 33% REVIEW	18/11/17

project / projet

FINGER PIER PHASE 2

CHARLOTTETOWN LABRADOR

drawing / dessin

DETAILS SHEET 1

designed / concu: C.F.
date: DECEMBER 2018
drawn / dessine: R.B.S.
date: DECEMBER 2018
approved / approuve
date
Tender / Soumission
DFO Project Manager / Administrateur de projets MPO
project number / no. du projet: 721683-011
drawing no. / no. du dessin: C5 OF 7

Plot Scale: 1:1