Public Works and Government Services Canada | Travaux publics et Services gouvernementaux Canada



**RETURN BIDS TO:**
**RETOURNER LES SOUMISSIONS À:**
**Bid Receiving - PWGSC / Réception des soumissions - TPSGC**
**11 Laurier St. / 11, rue Laurier**
**Place du Portage, Phase III**
**Core 0B2 / Noyau 0B2**
**Gatineau, Québec K1A 0S5**
**Bid Fax: (819) 997-9776**

# SOLICITATION AMENDMENT
# MODIFICATION DE L'INVITATION

The referenced document is hereby revised; unless otherwise indicated, all other terms and conditions of the Solicitation remain the same.

Ce document est par la présente révisé; sauf indication contraire, les modalités de l'invitation demeurent les mêmes.

**Comments - Commentaires**

**Vendor/Firm Name and Address**
**Raison sociale et adresse du fournisseur/de l'entrepreneur**

**Issuing Office - Bureau de distribution**
Fuel & Construction Products Division
L'Esplanade Laurier,
140 O'Connor Street,
East Tower, 4th floor,
Ottawa
Ontario
K1A 0S5

| | |
|---|---|
| **Title - Sujet**<br>Advanced Sub-Unit Water Purificatio | |
| **Solicitation No. - N° de l'invitation**<br>W8476-195990/A | **Amendment No. - N° modif.**<br>008 |
| **Client Reference No. - N° de référence du client**<br>W8476-195990 | **Date**<br>2019-09-26 |
| **GETS Reference No. - N° de référence de SEAG**<br>PW-$$HL-673-77537 | |
| **File No. - N° de dossier**<br>hl673.W8476-195990 | **CCC No./N° CCC - FMS No./N° VME** |
| **Solicitation Closes - L'invitation prend fin**<br>**at - à 02:00 PM**<br>**on - le 2019-10-24** | **Time Zone**<br>**Fuseau horaire**<br>Eastern Daylight Saving Time EDT |
| **F.O.B. - F.A.B.**<br>**Plant-Usine:** ☐ **Destination:** ☐ **Other-Autre:** ☐ | |
| **Address Enquiries to: - Adresser toutes questions à:**<br>Feagan, Shaun | **Buyer Id - Id de l'acheteur**<br>hl673 |
| **Telephone No. - N° de téléphone**<br>(613) 295-9018 ( ) | **FAX No. - N° de FAX**<br>( ) - |
| **Destination - of Goods, Services, and Construction:**<br>**Destination - des biens, services et construction:** | |

**Instructions: See Herein**

**Instructions: Voir aux présentes**

| | |
|---|---|
| **Delivery Required - Livraison exigée** | **Delivery Offered - Livraison proposée** |
| **Vendor/Firm Name and Address**<br>**Raison sociale et adresse du fournisseur/de l'entrepreneur**<br><br>**Telephone No. - N° de téléphone**<br>**Facsimile No. - N° de télécopieur** | |
| **Name and title of person authorized to sign on behalf of Vendor/Firm (type or print)**<br>**Nom et titre de la personne autorisée à signer au nom du fournisseur/ de l'entrepreneur (taper ou écrire en caractères d'imprimerie)**<br><br>**Signature** | **Date** |

Canada

| Request for Information No. / N° demande de rensignements | Amd. No. - N° de la modif. | Buyer ID - Id de l'acheteur |
|---|---|---|
| W8476-195990 | 008 | HL673 |

**Amendment 008**

**THIS AMENDMENT IS RAISED TO:**

1. **Answer Questions from Potential Suppliers**

**Q18.** What will be the requirement in regards of the number of 1000L IBC per Quadcon?

**A18.** 20 IBCs per Quadcon.

**Q19.** Through the Buy & Sell we received the Amendment 007 of the subject solicitation and found many changes done to the previous document. Would it be possible to receive a version who highlight the changes from the previous version?

**A19.** Yes, see attached document below.

***All other terms and conditions remain unchanged***

# STATEMENT OF WORK

# FOR THE

# WATER TREATMENT SYSTEM

NOTICE

This documentation has been reviewed by the technical authority and does not contain controlled goods. Disclosure notices and handling instructions originally received with the document must continue to apply.

AVIS

Cette documentation a été révisée par l'autorité technique et ne contient pas de marchandises contrôlées. Les avis de divulgation et les instructions de manutention reçues originalement doivent continuer de s'appliquer.

## TABLE OF CONTENTS

# 1.0 SCOPE

## 1.1 Purpose

1.1.1 The purpose of this Statement of Work (SOW) is to specify the requirements of a Water Treatment System (WTS) for the Canadian Armed Forces (CAF). The WTS is a part of the Advanced Sub-unit Water Purification System (ASUWPS) Project.

1.1.2 The main deliverables of the WTS include:

1.1.2.1 Water Treatment Units (WTU);

1.1.2.2 Miscellaneous Equipment Units (MEU);

1.1.2.3 Water Storage Units (WSU);

1.1.2.4 Trailers; and

1.1.2.5 Arctic Sustainment Units (ASU).

## 1.2 Background

1.2.1 Water is an essential combat supply and the lessons learned from operations over the last several decades has proven that it is not prudent to trust local water sources. These operations have been characterized by large geographic areas of operation with dispersed troops necessitating the requirement for a water purification system at the sub-unit level (up to 250 personnel). The existing sub-unit water purification system is obsolete and no longer supportable. Additionally, insufficient numbers of systems were held in the inventory to equip both Regular and Reserve Force units. There is an urgent need to deliver a new sub-unit water purification system in sufficient numbers to support the CAF.

## 1.3 Intended Use

1.3.1 The WTS is intended to dramatically improve the ability of the CAF to provide drinking water for its soldiers at the sub-unit level. It will replace the existing obsolete sub-unit water purification systems and increase the overall number of systems to fully enable Regular and Reserve Force units to sustain themselves in domestic and international operations. It will be used across the spectrum of operations including war, peacekeeping and humanitarian assistance.

1.3.2 The WTS is intended to be a self-contained and rapidly deployable water purification and treatment system. To increase operational flexibility and ease of deployment, the principal components of the WTS, namely the WTU, MEU, WSU and ASU, will be packaged in QUADCON ISO containers (one quarter length of the standard 20-foot-long ISO container). The Trailer is intended to transport up to two (2) QUADCON ISO containers.

## 1.4 Acronyms and Abbreviations

| | |
|---|---|
| ABL | Allocated Baseline |
| ASU | Arctic Sustainment Unit |
| ATP&P | Acceptance Test Plan & Procedures |
| ATR | Acceptance Test Report |
| AV | Acceptance Verification |
| CA | Contracting Authority |
| BIC | International Container Bureau |
| CAF | Canadian Armed Forces |
| CARC | Chemical Agent Resistant Coating |
| CBRN | Chemical Biological Radiological Nuclear |
| CDR | Critical Design Review |
| CDRL | Contract Data Requirements List |
| CFTO | Canadian Forces Technical Orders |
| CI | Configuration Item |
| CM | Configuration Management |
| CMS | Contract Master Schedule |
| CMVSS | Canadian Motor Vehicle Safety Standards |
| CNCGL | Controlled & Non-Controlled Goods List |
| CSA | Canadian Standards Association |
| CSA | Configuration Status Accounting |
| CSC | Convention for Safe Containers |
| CSR | Contract Status Report |
| CWBS | Contract Work Breakdown Structure |
| CWS | Cold Weather Shelter |
| DID | Data Item Description |
| DMC | Demilitarization Code |
| DND | Department of National Defence |
| DQA | Directorate of Quality Assurance |
| EBS | Equipment Breakdown Structure |
| CNCGL | Controlled & Non-Controlled Goods List |
| ECP | Engineering Change Proposal |
| EDAL | Engineering Drawings and Associated Lists |
| ECCN | Export Control Classification Number |
| EHS | Environmental Health and Safety |
| FBL | Functional Baseline |

| | |
|---|---|
| FSS | Fleet Support Spares |
| GFE | Government Furnished Equipment |
| GTW | Gross Trailer Weight |
| HPP | High Pressure Pump |
| IBC | Intermediate Bulk Container |
| IBC LINER | Intermediate Bulk Container Liner |
| ILS | Integrated Logistics Support |
| ILSM | Integrated Logistics Support Manager |
| IP | Intellectual Property |
| IPC | Initial Provisioning Conference |
| IPGC | Initial Provisioning Guidance Conference |
| IPM | Illustrated Parts Manual |
| ISO | International Standards Organization |
| IUT | Item Under Test |
| ITAR | International Traffic in Arms Regulations |
| LIS | List of Items Supported |
| MEU | Miscellaneous Equipment Unit |
| MilCOTS | Militarized Commercial of-the-Shelf |
| MIL-STD | United States Department of Defense Military Standard |
| MRC | Maximum Repair Cost |
| MSR | Mandated System Review |
| MSVS | Medium Support Vehicle System |
| MVSA | Motor Vehicle Safety Act |
| MVSR | Motor Vehicle Safety Regulations |
| NATO | North Atlantic Treaty Organization |
| NDID | National Defence Index of Documentation |
| NEMA | National Electrical Manufacturers Association |
| NRC | National Research Council of Canada |
| NSN | NATO Stock Number |
| NSF | National Sanitation Foundation |
| NTU | Nephelometric Turbidity Units |
| OEM | Original Equipment Manufacturer |
| PBL | Product Baseline |
| PCA | Physical Configuration Audit |
| PDR | Preliminary Design Review |
| PMP | Project Management Plan |

| | |
|---|---|
| POL | Petroleum, Oils & Lubricants |
| PPB | Provisioning Parts Breakdown |
| PPM | Part-per-Million |
| PSPC | Public Services and Procurement Canada |
| PWFTS | Prototype Water Filtration and Treatment System |
| QAR | Quality Assurance Representative |
| QUADCON | Quadruple Container |
| QMS | Quality Management System |
| RCE | Repair Cost Estimate |
| RF | Radio Frequency |
| R&M | Reliability and Maintainability |
| R&O | Repair and Overhaul |
| RTVM | Requirements Traceability Verification Matrix |
| SAE | Society of Automotive Engineers |
| SE | Systems Engineering |
| SEMP | System Engineering Management Plan |
| SMP | Standard Military Pattern |
| SOW | Statement of Work |
| SPTD | Supplementary Provisioning Technical Documentation |
| STANAG | Standardization Agreement |
| STTE | Special Tools and Test Equipment |
| TA | Technical Authority |
| TB | Thermal Blanket |
| TDS | Total Dissolved Solids |
| TIR | "Transports internationaux routiers" (International Road Transports) |
| TLAD | Top Level Assembly Drawing |
| TRR | Test Readiness Review |
| USML | United States Munitions List |
| WSU | Water Storage Unit |
| WTS | Water Treatment System |
| WTU | Water Treatment Unit |

# 2.0 APPLICABLE DOCUMENTS

## 2.1 References

2.1.1 Whereas mentioned, the following Standards must be used for the preparation of deliverables to the extent specified in this SOW.

**GOVERNMENT FURNISHED INFORMATION**

| REFERENCE NUMBER | PROMULGATION DATE | REFERENCE TITLE |
|---|---|---|
| A-EN-007-000/FP-001 | 2003-10-31 | DND ENVIRONMENTAL ASSESSMENT MANUAL |
| C-01-100-100/AG-008 | 2017-11-02 | WRITER'S GUIDE FOR TECHNICAL DOCUMENTATION |
| C-02-007-000/AG-001 | 2016-01-01 | CONTROLLED TECHNOLOGY ACCES AND TRANSFER (CTAT) MANUAL |
| C-12-130-000/CL-001 | 2011-11-21 | AIRCRAFT CARGO LOADING INSTRUCTIONS, CC130 HERCULES CARGO LOADING HANDLING |
| C-30-K86-000/TE-000 | | DATA SUMMARY/SPEC SHEET MSVS SMP |
| C-32-F42-000/MA-000 | 2009-11-30 | DATA SUMMARY TRUCK, 8 TONNES, 6X6, CARGO, MSVS MILCOTS, CANADIAN SERIES |
| C-32-F42-000/MB-Z01 | 2009-09-02 | OPERATOR'S INSTRUCTIONS, TRUCK, 8 TONNES, 6X6, CARGO, MSVS MILCOTS |
| D-01-100-204/SF-000 | 2000-10-31 | SPECIFICATION - PREPARATION OF PREVENTIVE MAINTENANCE INSTRUCTIONS |
| D-01-100-205/SF-000 | 2000-10-31 | SPECIFICATION - PREPARATION OF CORRECTIVE MAINTENANCE INSTRUCTION |
| D-01-100-207/SF-002 | 1996-07-12 | SPECIFICATION - PREPARATION OF INTERIM ILLUSTRATED PARTS MANUALS FOR LAND EQUIPMENTS |
| D-01-100-211/SF-000 | 1991-06-01 | SPECIFICATION – PRESERVATION, STORAGE AND HANDLING INSTRUCTION |
| D-01-100-214/SF-000 | 2002-05-01 | SPECIFICATION FOR PREPARATION OF PROVISIONING DOCUMENTATION FOR CANADIAN FORCES EQUIPMENT |
| D-01-300-100/SG-000 | 1992-02-01 | STANDARD FOR SPECIFICATION PREPARATION - TECHNICAL CONTENT |
| D-01-400-001/SG-000 | 1979-04-02 | STANDARD - ENGINEERING DRAWING PRACTICES FOR CLASS 1 DRAWINGS AND TECHNICAL DATA LISTS |
| D-01-400-002/SF-000 | 1983-11-30 | SPECIFICATION FOR LEVELS OF ENGINEERING DRAWINGS AND ASSOCIATED LISTS |
| D-02-002-001/SG-001 | 2003-04-01 | STANDARD – IDENTIFICATION MARKING OF CANADIAN MILITARY PROPERTY |
| D-02-006-008/SG-001 | 1985-05-16 | THE DESIGN CHANGE, DEVIATION AND WAIVER PROCEDURE |

| | | |
|---|---|---|
| D-80-001-055/SF-001 | 2005-08-01 | SPECIFICATION FOR LABEL, CLOTHING AND EQUIPMENT |
| DCIEM 98-CR-15 | 1998-03 | ANTHROPOMETRIC SURVEY OF THE LAND FORCES |
| D-LM-008-001/SF-001 | 1983-02-03 | METHODS OF PACKAGING |
| D-LM-008-002/SF-001 | 1991-08-01 | SPECIFICATION FOR MARKING FOR STORAGE AND SHIPMENT |
| D-LM-008-011/SF-001 | 1988-11-10 | PREPARATION AND USE OF PACKAGING REQUIREMENTS CODES |
| D-LM-008-036/SF-000 | 2013-12-01 | DND MINIMUM REQUIREMENT FOR MANUFACTURER'S STANDARD PACK |

**COMMERCIALLY AVAILABLE**

| REFERENCE NUMBER | PROMULGATION DATE | REFERENCE TITLE |
|---|---|---|
| ACMP-2009 | 2017 | GUIDANCE ON CONFIGURATION MANAGEMENT |
| AECTP-230 ED.1 | 2009-05-07 | CLIMATIC CONDITIONS |
| ANSI/EIA-649-C | 2019 | CONFIGURATION MANAGEMENT STANDARD |
| ASME Y14.100 | | ENGINEERING DRAWING PRACTICES |
| ASME Y14.24 | | TYPES AND APPLICATIONS OF ENGINEERING DRAWINGS |
| ASME Y14.34M | | ASSOCIATED LISTS |
| ASTM D975-15A | 2015-06-01 | STANDARD SPECIFICATION FOR DIESEL FUEL OILS |
| CANADA LABOUR CODE | PART II, 2019 | OCCUPATIONAL HEALTH AND SAFETY |
| CAN/CGSB-43.146-2016 | APRIL 2016 | DESIGN, MANUFACTURE AND USE OF INTERMEDIATE BULK CONTAINERS FOR THE TRANSPORTATION OF DANGEROUS GOODS |
| CAO 21-04 | 2014 | PAINT AND MARKING POLICY FOR LAND EQUIPMENT, DLR/DGLEPM |
| CSA C22.1, ED.24 | 2018 | CANADIAN ELECTRICAL CODE, PART I ELECTRICAL INSTALLATIONS |
| CSA C22.2, ED.24 | 2018 | CANADIAN ELECTRICAL CODE, PART II, GENERAL |
| C.R.C., c. 1038 | 2019 | TRANSPORT CANADA, MOTOR VEHICLE SAFETY REGULATIONS |
| CSC 1972 | 2014 | INTERNATIONAL CONVENTION FOR SAFE CONTAINERS |
| DFO / 5080 | 1995-03 | FRESHWATER INTAKE FISH SCREEN GUIDELINE |
| FED-STD-191A | 1978-07-20 | FEDERAL STANDARD 191A |
| SAE AMS-STD-595 | 2017-02-14 | COLORS USED IN GOVERNMENT PROCUREMENT |
| HEALTH CANADA | 2019-03 | GUIDELINES FOR CANADIAN DRINKING WATER QUALITY, GUIDELINE TECHNICAL DOCUMENT |

| | | |
|---|---|---|
| HEALTH CANADA | 2017-02 | GUIDELINES FOR CANADIAN DRINKING WATER QUALITY, SUMMARY TABLE |
| IEEE 15288.1 | 2014 | IEEE STANDARD FOR APPLICATION OF SYSTEMS ENGINEERING ON DEFENSE PROGRAMS |
| IEEE 15288.2 | 2014 | IEEE STANDARD FOR TECHNICAL REVIEWS AND AUDITS ON DEFENSE PROGRAMS |
| ISO 6346 | 1995 | FREIGHT CONTAINERS -- CODING, IDENTIFICATION AND MARKING |
| ISO 668 | 2013-08-01 | SERIES 1 FREIGHT CONTAINERS – CLASSIFICATION, DIMENSIONS AND RATINGS |
| MIL-DTL-53072F | 2017-05-31 | CHEMICAL AGENT RESISTANT COATING (CARC) |
| MIL-PRF-24667C, AM1 | 2018-03-27 | COATING SYSTEM, NON-SKID |
| MIL-STD-188-124B | 2000-12-18 | GROUNDING, BONDING AND SHIELDING |
| MIL-STD-209K | 2005-02-22 | DEPARTMENT OF DEFENSE INTERFACE STANDARD FOR LIFTING AND TIEDOWN PROVISIONS |
| MIL-STD-810H, | 2014-04-15 | ENVIRONMENTAL ENGINEERING CONSIDERATIONS AND LABORATORY TESTS |
| MIL-STD-1179E | 2011-06-13 | LAMPS, REFLECTORS AND ASSOCIATED SIGNALING EQUIPMENT FOR MILITARY VEHICLES |
| MIL-STD-1366E | 2006-10-31 | INTERFACE STANDARD FOR TRANSPORTABILITY CRITERIA |
| MIL-STD-1474E | 2015-04-15 | DESIGN CRITERIA STANDARD NOISE LIMITS |
| MIL-STD-31000B | 2018-10-31 | TECHNICAL DATA PACKAGES |
| NEMA IEC 60529, ED2.2 | 2013-08 | DEGREES OF PROTECTION PROVIDED BY ENCLOSURES (IP CODE) |
| NPC | 2015 | NATIONAL PLUMBING CODE OF CANADA |
| NSF/ANSI 61 | 2018 | DRINKING WATER SYSTEM COMPONENTS – HEALTH EFFECTS |
| R.S., 1985, C. H-3 | 1985 | HAZARDOUS PRODUCTS ACT |
| SOR/86-304 | 2015 | CANADA OCCUPATIONAL HEALTH AND SAFETY REGULATIONS |
| SOR/99-7 | 2019-04-08 | OZONE-DEPLETING SUBSTANCES REGULATIONS |
| STANAG 2601 ED.3 | 1996-05-31 | STANDARDIZATION OF ELECTRICAL SYSTEMS IN TACTICAL LAND VEHICLES |
| STANAG 2604 ED.3 | 1986-02-12 | BREAKING SYSTEMS BETWEEN TRACTOR, DRAW-BAR TRAILER AND SEMI-TRAILER EQUIPMENT COMBINATIONS FOR MILITARY USE |
| STANAG 2805 ED.5 | 1997-10-07 | FORDING AND FLOTATION REQUIREMENTS FOR COMBAT AND SUPPORT GROUND VEHICLES |
| STANAG 4062 ED.6 | 2016-05-27 | SLINGING AND TIE-DOWN FACILITIES FOR LIFTING AND TYING DOWN MILITARY EQUIPMENT |

| | | |
|---|---|---|
| STANAG 4101 ED.2 | 2000-02-21 | TOWING ATTACHMENTS |
| STANAG 4478 ED.1 | 2004-10-08 | EMERGENCY TOWING AND RECOVERY FACILITIES FOR TACTICAL LAND VEHICLES |
| STANAG 4381 ED.1 | 1994-07-08 | BLACKOUT LIGHTING SYSTEMS FOR TACTICAL LAND VEHICLES |
| Z234.1-00 | | CANADIAN METRIC PRACTICES GUIDE |

## 2.2 Order of Precedence

2.2.1 In the event of conflict between the content in this SOW and the referenced documents, the content of this SOW will take precedence.

# 3.0 PROJECT MANAGEMENT

## 3.1 Project Management Program

3.1.1 The Contractor must designate a Project Manager with the responsibilities to coordinate, execute, and manage the Contractor's project management activities for the Contract. The Contractor's Project Manager must have the total responsibility for all works required under the Contract.

3.1.2 The Contractor's Project Manager must be the primary point of contact between the Contractor, the DND Technical Authority (TA), and the PSPC Contracting Authority (CA) for all issues related to the Contract.

## 3.2 Project Management Plan

3.2.1 The Contractor must provide a Project Management Plan (PMP) IAW Contract Data Requirement List (CDRL) WTS-PM-001 at Appendix A2.3 (page 107) to ANNEX A and its associated Data Item Deliverable (DID) WTS-PM-001 at Appendix A3.3 (page 146) to ANNEX A.

3.2.2 The Contractor must manage its program of activities under the contract IAW the approved PMP.

## 3.3 Contract Master Schedule

3.3.1 The Contractor must provide a Contract Master Schedule (CMS) IAW CDRL WTS-PM-002 at Appendix A2.4 (page 108) to ANNEX A and its associated Data Item Deliverable (DID) WTS-PM-002 at Appendix A3.4 (page 148) to ANNEX A.

3.3.2 The Contractor must use the approved CMS as the primary schedule for managing the project.

3.3.3 The Contractor may amend the approved CMS, without first obtaining the TA's and Contracting Authority's approval, as long as:

3.3.3.1 Payments under the contract are not affected;

3.3.3.2 The milestones dates are not affected; and

3.3.3.3 The ability of Canada to meet its obligations under the contract is not affected.

## 3.4 Contract Work Breakdown Structure

3.4.1 The Contractor must provide a Contractor Work Breakdown Structure (CWBS) IAW CDRL WTS-PM-003 at Appendix A2.5 (page 109) to ANNEX A and its associated Data Item Deliverable (DID) WTS-PM-003 at Appendix A3.5 (page 150) to ANNEX A.

3.4.2 The Contractor must manage the contract IAW the Approved CWBS.

3.4.3 The Contractor may amend the approved CWBS, without first obtaining the TA's approval, as long as:

3.4.3.1 All elements affected by the amendment are below the reporting level;

3.4.3.2 The amendments are consistent with the approved CWBS; and

3.4.3.3 The TA is notified within 14 calendar days of the changes being made.

## 3.5 Contract Status Report

3.5.1 The Contractor must provide a Contract Status Report (CSR) IAW CDRL WTS-PM-004 at Appendix A2.6 (page 110) to ANNEX A and its associated DID WTS-PM-004 at Appendix A3.6 (page 152) to ANNEX A.

## 3.6 Project Meetings

3.6.1 Meeting Organization and Coordination

3.6.1.1 The Contractor's Project Manager must be present at the Kick-off Meeting, and at other meetings when requested by Canada. If the Project Manager does not have final approval authority for decision making and changes, then the person that has that final approval authority must also be present.

3.6.2 Kick-off Meeting

3.6.2.1 The Contractor must hold and chair a Kick-off Meeting, at the Contractor's facility, within 42 calendar days after contract award to review and secure a common understanding of the following:

3.6.2.1.1 The requirements of the Contract;

3.6.2.1.2 The requirements of the SOW;

3.6.2.1.3 General overview of the project, risks, schedule and communication channels to follow, and

3.6.2.1.4 Other contractual and programmatic issues associated with the project as agreed to between the TA, CA and the Contractor.

3.6.2.2 During the Kick-off Meeting, the Contractor must provide a Top Level Assembly Drawing (TLAD) IAW CDRL WTS-ILS-201 at Appendix A2.17 (page 121) and its associated DID WTS-ILS-201 at Appendix A3.17 (page 179) to this ANNEX A.

3.6.2.3 Refer to Meeting Documentation requirements found at ANNEX A para. 3.6.6.

3.6.3 Systems Engineering (SE) Meeting

3.6.3.1 The Contractor must hold and chair the first SE meeting following the closure of the Kick-Off Meeting, in order to:

3.6.3.1.1 Review and secure a common understanding of the requirements expressed in the SE CDRLs and DIDs, the Technical Specification(s), and other referenced specifications; and

3.6.3.1.2 Discuss possible design strategies and concepts.

3.6.3.2 If the preliminary design of the WTS, based on the requirements derived from the Technical Specification(s), is sufficiently advanced and the entry criteria for the Preliminary Design Review (PDR) have been met, as described in ANNEX A section 4.3.1, the Contractor can request approval for the PDR occurring along with this meeting.

3.6.3.3 Refer to Meeting Documentation requirements found at ANNEX A para. 3.6.6.

3.6.4 Integrated Logistics Support (ILS) Meeting

3.6.4.1 The Contractor must hold and chair an ILS Meeting following the closure of the SE Meeting, in order to:

3.6.4.1.1 Review and secure a common understanding of the requirements expressed in the ILS CDRLs and DIDs, DND Canadian Forces Technical Orders (CFTO)s and specifications; and,

3.6.4.1.2 Discuss possible sparing strategies and concepts, Lowest Replaceable Units (LRUs), and lines of maintenance.

3.6.4.2 Refer to Meeting Documentation requirements found at ANNEX A para. 3.6.6.

3.6.5 Other meetings

3.6.5.1 The Contractor must hold and chair (at the Contractor's facility) additional SE meetings as described in ANNEX A para. 4.2.4.

3.6.5.2 The Contractor and the TA may schedule informal reviews, such as teleconferences, video conferences, briefings and technical interchange meetings, to help achieve the requirements of the Contract.

3.6.6 Meeting Documentation

3.6.6.1 The Contractor must prepare and deliver a meeting agenda for all formal meetings and conferences, and prepare and deliver the meeting minutes afterwards.

3.6.6.1.1 The Contractor must provide the Meeting Agenda(s) IAW CDRL WTS-PM-005 at Appendix A2.7 (page 111) to ANNEX A and its associated DID WTS-PM-005 at Appendix A3.7 (page 154) to ANNEX A.

3.6.6.1.2 The Contractor must record, prepare, and provide the Meeting Minutes of each meeting IAW CDRL WTS-PM-006 at Appendix A2.8 (page 112) to ANNEX A and its associated DID WTS-PM-006 at Appendix A3.8 (page 155) to ANNEX A.

3.6.6.2 No change in the interpretation of the SOW, Technical Requirements Specification, cost, and schedule, as defined in the Contract, may be authorized by the minutes of a meeting. Such changes will require formal contract amendment by the CA.

# 4.0 SYSTEMS ENGINEERING

## 4.1 Overview

4.1.1 The Contractor must define and implement Systems Engineering (SE) processes in conformance with IEEE 15288.1-2014, or equivalent standard, as further described within this document.

4.1.1.1 The Contractor must measure conformance via the outcomes and outputs specified by 15288.1-2014, or equivalent standard.

4.1.2 The Contractor must define and conduct technical reviews and audits in conformance with IEEE 15288.2-2014, or equivalent standard.

4.1.2.1 The Contractor must measure conformance via the outputs and criteria specified by 15288.2-2014, or equivalent standard.

4.1.3 The Contractor must use SE processes to define the requirements for the system, to transform the requirements into an effective product providing the required system functionality, and to sustain the product functionality during the production/manufacturing phase.

4.1.4 The Contractor must implement a SE process that will transform all system requirements into a set of lower level performance requirements which define the system, including the following:

4.1.4.1 The SE process must plan, identify, and allocate functional requirements, provide inputs to documentation, and include requirement, design and implementation reviews.

4.1.4.2 The SE effort must integrate all elements of a multifunctional engineering effort to meet system requirements.

4.1.5 The Contractor must ensure the timely integration of engineering specialties such as reliability, maintainability, supportability, cybersecurity, logistics engineering, human factors engineering, safety, value engineering, standardization, and transportability into design and development.

4.1.6 The Contractor must perform engineering, design activities, and tasks as necessary to support production, installation, integration, test, and acceptance of all hardware components and software delivered.

## 4.2 Systems Engineering Management

4.2.1 The Contractor must designate a SE Manager with the responsibilities to coordinate, execute, and manage the Contractor's systems engineering activities for the Contract.

4.2.2 Systems Engineering Management Plan

4.2.2.1 The Contractor must submit a Systems Engineering Management Plan (SEMP) IAW CDRL WTS-SE-101 at Appendix A2.9 (page 113) and its associated DID WTS-SE-101 at Appendix A3.9 (page 156) to ANNEX A.

4.2.2.2 The Contractor must conduct its program of engineering activities, and ensure that all Subcontractor activities are consistent with and IAW the approved SEMP.

4.2.3 Engineering Schedule

4.2.3.1 The Contractor must provide a time-based schedule of engineering activities as part of the CMS.

4.2.3.2 The Contractor must capture all technical milestones, including system reviews, and their key dependencies in the CMS.

4.2.4 Conduct of Mandated System Reviews

4.2.4.1 The Contractor must conduct all Mandated System Reviews (MSRs) and all Internal System Reviews IAW the approved SEMP.

4.2.4.2 The Contractor must conduct all MSRs at Contractor premises unless otherwise agreed by the TA and CA.

4.2.4.3 Unless otherwise agreed between the parties, the Contractor must not commence a MSR until:

4.2.4.3.1 All data items required by the CDRL to be delivered before the review have been delivered, and the TA considers the data items to be suitable for the purposes of conducting the review;

4.2.4.3.2 All entry criteria defined in the governing plans for that review have been met;

4.2.4.3.3 All action items from any previous reviews affecting this review have been successfully addressed or action plans agreed with the TA; and

4.2.4.3.4 All pre-requisite activities defined in the contract have been successfully conducted.

4.2.4.4 Prior to each MSR, the Contractor must provide a MSR Package for that review IAW CDRL WTS-SE-102 at Appendix A2.10 (page 114) to ANNEX A and its associated DID WTS-SE-102 at Appendix A3.10 (page 161) to ANNEX A.

4.2.4.5 Prior to each MSR, the Contractor must provide a Meeting Agenda for that review, and following each MSR, provide Meeting Minutes of that review.

4.2.4.5.1 Refer to Meeting Documentation requirements found at ANNEX A para. 3.6.6.

4.2.4.6 The Contractor must ensure that Contractor representatives and Subcontractors' representatives participate in each MSR to the subject and objectives of that System Review.

4.2.4.7 The Contractor and the TA must co-chair each MSR.

4.2.4.8 The TA will classify each action item raised during MSRs as either a major or minor action item, considering their impact on the objectives of the MSR.

4.2.4.9 Unless otherwise agreed between the parties, the Contractor must not exit a MSR until:

4.2.4.9.1 All exit criteria, as defined in the governing plans for that review, have been met;

4.2.4.9.2 All contract plans, schedules, and activities for future phases have been reviewed and confirmed as appropriate, realistic and achievable with acceptable risk;

4.2.4.9.3 All major action items have been closed;

4.2.4.9.4 All minor action items have been documented and assigned with agreed closure dates; and

4.2.4.9.5 The MSR has achieved its objectives, as defined in the SOW and the governing plans relating to that review.

4.2.4.10 The Contractor must not claim completion for a MSR until both the TA and the Contractor are satisfied that all the exit criteria have been met.

4.2.5 Requirements Traceability Verification Matrix (RTVM)

4.2.5.1 The Contractor must provide an RTVM IAW CDRL WTS-SE-103 at Appendix A2.11 (page 115) to ANNEX A and its associated DID WTS-SE-103 at Appendix A3.11 (page 162) to ANNEX A.

4.2.5.2 The Contractor must utilize the Technical Specification at Appendix A1.0 to ANNEX A, to develop the RTVM and demonstrate compliance to the Technical Specification.

4.2.5.3 The Contractor must trace each specification requirement and verification requirement to one or more requirements in the next lower level in the specification hierarchy (downward traceability).

4.2.5.4 The Contractor must trace each specification requirement and verification requirement to one or more requirements in the next higher level in the specification hierarchy (upward traceability).

## 4.3 System Design

4.3.1 Preliminary Design Review (PDR)

4.3.1.1 The Contractor must conduct a MSR, a PDR, at the completion of the preliminary design phase, IAW the approved SEMP.

4.3.1.1.1 The purpose of the PDR is for the Government to formally review the activities and work products generated by the Contractor during the performance of the preliminary design stage in order to develop the allocated baseline, and to verify that the approach for the system design is ready to proceed into the detailed design phase.

4.3.1.1.2 The Contractor must present and describe the system design and program status.

4.3.1.1.3 The Contractor must include the following topics for discussion and presentation at the PDR:

4.3.1.1.3.1 Assess the proposed packaging of the WTU, MEU, WSU and ASU within the standard QUADCONs and the integration design of a whole WTS as a system: (2 QUADCONs mounted on a trailer; mounted and dismounted operation scenarios).

4.3.1.1.3.2 Determine if the design of the proposed Water Filtration and Treatment System is mature enough for the Contractor to proceed to the fabrication of the Prototype Water Filtration and Treatment System (PWFTS).

4.3.1.1.3.3 Logistics design aspects and concerns;

4.3.1.1.3.4 Test and evaluation;

4.3.1.1.3.5 Program problem and risk areas, recommended solutions, and evaluation of alternatives; and

4.3.1.1.3.6 Updated RTVM.

4.3.1.2 PDR Entry Criteria

4.3.1.2.1 The Contractor must meet the following entry criteria for the PDR to take place:

4.3.1.2.1.1 Updated RTVM showing traceability of requirements is available;

4.3.1.2.1.2 Allocated Baseline has been developed;

4.3.1.2.1.3 Risk assessments and risk mitigation plans have been developed;

4.3.1.2.1.4 Reliability and Maintainability (R&M) requirements have been allocated to the design;

4.3.1.2.1.5 CMS shows critical path through CDR;

4.3.1.2.1.6 Program technical risk is medium or lower;

4.3.1.2.1.7 Program execution risk is medium or lower;

4.3.1.3 PDR Exit Criteria

4.3.1.3.1 The Contractor must meet the following exit criteria for the PDR to complete:

4.3.1.3.1.1 CDRL items that were part of the PDR entry criteria have been discussed;

4.3.1.3.1.2 Updated RTVM demonstrates forward and backward traceability;

4.3.1.3.1.3 Risk assessments and risk mitigation plans have been discussed. Risks and their respective mitigation plans are in place and manageable for implementation of the functional requirements into a preliminary design;

4.3.1.3.1.4 Program schedule is executable within the anticipated cost and technical risks;

4.3.1.3.1.5 Program is properly staffed;

4.3.1.3.1.6 PDR presentation materials are available;

4.3.1.3.1.7 Per the CMS, an executable schedule has been presented;

4.3.1.3.1.8 Allocated Baseline has been established;

4.3.2 Critical Design Review (CDR)

4.3.2.1 The Contractor must conduct a MSR, a CDR, at the completion of the detailed design phase, IAW the approved SEMP.

4.3.2.1.1 The purpose of the CDR is for the Government to formally review the activities and work products generated by the Contractor during the performance of the detail design stage in order to develop the product baseline, and to verify that the building blocks are either ready for further development, adequately defined for procurement, or adequately defined for fabrication.

4.3.2.1.2 The Contractor must present and describe the finalized system design and program status, and address the design changes made since the PDR.

4.3.2.1.3 The Contractor must include the following topics for discussion and presentation at the CDR:

4.3.2.1.3.1 Ensure that the detailed design of the WTS addresses the performance requirements within the Technical Specification;

4.3.2.1.3.2 Ensure that the detailed design of the WTS is adequate to proceed into fabrication, system integration and testing;

4.3.2.1.3.3 Electromagnetic Environmental Effects impacts;

4.3.2.1.3.4 R&M and system safety programs progress, including updated R&M predictions and hazards analysis results;

4.3.2.1.3.5 Logistics design aspects and concerns;

4.3.2.1.3.6 Test and evaluation;

4.3.2.1.3.7 Program problem and risk areas, recommended solutions, and evaluation of alternatives; and

4.3.2.1.3.8 Updated RTVM.

4.3.2.2 CDR Entry Criteria

4.3.2.2.1 The Contractor must meet the following entry criteria for the CDR to take place:

4.3.2.2.1.1 Updated RTVM showing requirements traceability is available;

4.3.2.2.1.2 Product Baseline has been developed;

4.3.2.2.1.3 Updated risk assessment and risk mitigation plans are available;

4.3.2.2.1.4 Risks and their respective mitigation plans are in place and manageable for implementation of the functional requirements into a final design;

4.3.2.2.1.5 R&M requirements have been addressed in the design;

4.3.2.2.1.6 Trade-off analyses have been completed;

4.3.2.2.1.7 Logistics analysis has been completed and plans have been established; and

4.3.2.2.1.8 CMS shows critical path through testing.

4.3.2.3 CDR Exit Criteria

4.3.2.3.1 The Contractor must meet the following exit criteria for the CDR to complete:

4.3.2.3.1.1 CDRL items that were part of the CDR entry criteria have been satisfactorily discussed;

4.3.2.3.1.2 Updated RTVM demonstrates forward and backward traceability;

4.3.2.3.1.3 Updated risk assessments and risk mitigation plans have been satisfactorily discussed. Risks and their respective mitigation plans are in place and manageable for implementation of the functional requirements into a final design;

4.3.2.3.1.4 Program schedule is executable within the anticipated cost and technical risks;

4.3.2.3.1.5 Program is properly staffed;

4.3.2.3.1.6 CDR presentation materials are available;

4.3.2.3.1.7 Per the CMS, an executable schedule has been presented; and

4.3.2.3.1.8 Product Baseline has been established.

## 4.4 System Implementation

4.4.1 Hardware Development

4.4.1.1 The Contractor must document all hardware development processes and procedures in the SEMP for the WTS.

4.4.1.2 The Contractor must conduct all hardware development activities for the Contract IAW the approved SEMP for the WTS.

4.4.1.3 The Contractor must integrate and assemble the system hardware that satisfies the performance requirements stated in the Technical Specification Appendices of this SOW.

4.4.1.4 The Contractor must conduct market surveillance and market investigations in order to maximize the use of commercial and non-developmental items.

4.4.1.5 The Contractor must apply the systems engineering process during each level of system development (system, subsystem, and component) to provide the best approach, and provide the following:

4.4.1.5.1 Hardware designs and lower level specifications must be based on performance, cost, industry acceptance, long term availability, maintainability, supportability, and upgrade potential; and

4.4.1.5.2 The design concept must include an open systems approach which must be based on an engineering and business strategy.

4.4.1.6 The Contractor must choose specifications and standards adopted by industry standards bodies or de facto standards (set by the marketplace) for selected system interfaces, products, practices, and tools.

4.4.1.6.1 The Contractor must document all hardware and interface design changes into the existing Hardware Baseline Document.

4.4.2 Software Development

4.4.2.1 The Contractor must plan and conduct its Software engineering activities IAW the approved SEMP.

4.4.2.2 The Contractor must ensure that approved Subcontractors undertaking Software engineering activities conduct those activities IAW the approved SEMP and the contract.

4.4.2.3 The Contractor must design and develop the system software and firmware and must follow industry software engineering best practices.

4.4.2.4 The design process and developed software must incorporate features that promote:

4.4.2.4.1 Assessment of open source software products;

4.4.2.4.2 Ease of operation;

4.4.2.4.3 Ease of software maintenance;

4.4.2.4.4 Ease of future updates and modifications;

4.4.2.4.5 Fault Tolerance; and

4.4.2.4.6 Smart designs that can justify a reduction in the amount of documentation.

4.4.2.5 Computer programs and computer data system must be fully integrated IAW the Technical Specification Appendices of this SOW.

4.4.3 Engineering Drawings and Associated Lists

4.4.3.1 The Contractor must provide a complete set of **LEVEL 2** Commercial Engineering Drawings and Associated Lists IAW CDRL WTS-SE-104 at Appendix A2.12 (page 116) to ANNEX A and its associated DID WTS-SE-104 at Appendix A3.12 (page 164) to ANNEX A and Appendix A4.0 APPENDIX: COMMERCIAL (OEM) ENGINEERING DRAWINGS AND ASSOCIATED LISTS.

## 4.5 Specialty Engineering

4.5.1 Growth, Evolution and Obsolescence Program

4.5.1.1 The Contractor must provide a growth, evolution and obsolescence program that meets the following objectives:

4.5.1.1.1 Technology evolution and Obsolescence issues are appropriately considered in the design of the WTS;

4.5.1.1.2 The Contractor's design, development and production programs will not deliver equipment that has obsolescence problems at the time of delivery; and

4.5.1.1.3 Solutions for the WTS minimize Life Cycle Cost when technology evolution and obsolescence issues are taken into consideration.

4.5.1.2 The Contractor must address the planning for, and the management of, the growth, evolution and obsolescence program in the SEMP.

4.5.1.3 The Contractor must conduct the growth, evolution and Obsolescence program IAW the approved SEMP.

4.5.2 Human Engineering

4.5.2.1 The Contractor must provide a Human Engineering program that meets the following objectives:

4.5.2.1.1 Develop or improve human interfaces of the WTS;

4.5.2.1.2 Achieve required effectiveness of human performance during WTS operation, maintenance, support, control, and transportation; and

4.5.2.2 The Contractor must address planning for, and management of, the Human Engineering program in the SEMP.

4.5.2.3 The Contractor must conduct the Human Engineering program IAW the approved SEMP.

# 5.0 CONFIGURATION MANAGEMENT

## 5.1 Overview

5.1.1 The Contractor must conduct configuration management activities IAW IEEE 15288.1-2014 and ANSI/EIA-649-C, or equivalent standards, to ensure effective configuration identification, configuration control, change control, and configuration audits for the Work, as well as effective management and implementation of engineering changes.

## 5.2 Configuration Management Planning

5.2.1 The Contractor must address planning for, and management of, the Configuration Management (CM) program in the SEMP.

5.2.2 The Contractor must manage, conduct and coordinate all Contractor and Subcontractor CM activities IAW the approved SEMP.

5.2.3 The Contractor must ensure that all Subcontractors comply with the requirements of the SEMP and are integrated into the Contractor's CM activities

## 5.3 Configuration Baselines

5.3.1 The Contractor must develop and maintain each of the following Configuration Baselines for the WTS during the contract:

5.3.1.1 Functional Baseline (FBL);

5.3.1.2 Allocated Baseline (ABL); and

5.3.1.3 Product Baseline (PBL).

## 5.4 Configuration Control

5.4.1 The Contractor must manage configuration changes and Deviations (see para. 7.2.1), including their:

5.4.1.1 Identification;

5.4.1.2 Request and documentation;

5.4.1.3 For configuration changes only, classification as Class I (major change) or Class II (minor change);

5.4.1.4 Evaluation and coordination; and

5.4.1.5 Implementation and verification of the changes.

5.4.2 The Contractor must provide Engineering Change Proposals (ECPs) IAW CDRL WTS-SE-105 at Appendix A2.13 (page 117) to ANNEX A and its associated DID WTS-SE-105 at Appendix A3.13 (page 165) to ANNEX A, to implement changes to the approved FBL and PBL.

5.4.2.1 The Contractor must document all necessary changes to specifications, drawings and other documentation requiring revision should the ECP be approved, in place of the reference to Specification Change Notices.

5.4.2.2 Copies of these revisions must be provided for CDRLs already provided to DND, following the original CDRL timelines for review.

5.4.3 As per ACMP-2009, the Contractor must classify an ECP as Class I if:

5.4.3.1 The FBL, once established, is affected to the extent that any of the requirements are not within specified limits or specified tolerances;

5.4.3.2 The PBL, once established, is affected or the change impacts one or more of the following:

5.4.3.2.1 Government Furnished Equipment (GFE);

5.4.3.2.2 Safety (to include safety critical software);

5.4.3.2.3 Security;

5.4.3.2.4 Deliverable computer software;

5.4.3.2.5 Compatibility or interoperability with interfacing items;

5.4.3.2.6 Delivered operational and maintenance manuals;

5.4.3.2.7 Interchangeability or replaceability; or

5.4.3.2.8 Skills, manning, training, biomedical factors or human engineering design;

5.4.3.3 Any of the contractual factors are affected, such as costs, guarantees, warranties, deliveries or scheduled contractual milestones.

5.4.4 The Contractor must classify an ECP as Class II for all changes not classified as Class I, and the Contractor will require that the TA reviews Class II changes for concurrence in the classification only.

5.4.4.1 At the request of the TA, the Contractor must resubmit a proposed Class II change to a PBL as a proposed Class I change to that PBL.

5.4.5 The Contractor must, for any proposed change to a Configuration Baseline, ensure that all Configuration Baselines will be mutually consistent and compatible.

## 5.5 Configuration Status Accounting

5.5.1 The Contractor must establish and maintain, IAW the approved SEMP, a Configuration Status Accounting (CSA) system that correlates, stores, maintains and provides readily available views of all configuration information relating to those items identified as Configuration Items.

5.5.2 The Contractor must provide CSA Reports, from the Contractor's CSA system, IAW CDRL WTS-SE-106 at Appendix A2.14 (page 118) to ANNEX A and its associated DID WTS-SE-

106 at Appendix A3.14 (page 172) to ANNEX A, capturing all current change status and change history and the as-designed, as-built, as-delivered and as-modified configuration of all Configuration Items and International Container Bureau (BIC) consisting of the DND Owner Code (CFCU) tracked components of the WTS.

5.5.2.1 For Computer Software Configuration Items and Computer Software Components, the CSA must include the as-delivered, as-modified and as-tested configuration as of a particular date.

## 5.6 Configuration Audits

5.6.1 The Contractor must invite the TA, or representatives appointed by the TA, to witness all PCAs.

5.6.2 Unless the Contractor is otherwise notified by the TA, the TA or appointed representative(s) must witness all Configuration Audits that are conducted for the purpose of acceptance.

5.6.3 Unless the TA has notified that it will not witness a Configuration Audit IAW para 5.6.2, the Contractor must not conduct that Configuration Audit in the absence of the TA or the appointed representative(s).

5.6.4 Physical Configuration Audit (PCA)

5.6.4.1 The Contractor must conduct a MSR, the PCA, on each WTS Configuration Item, prior to delivery, IAW the approved SEMP.

5.6.4.1.1 The objective of the PCA for an item are to:

5.6.4.1.1.1 Confirm that the ‘as-built’ or ‘as-coded’ configuration is consistent with the configuration documentation;

5.6.4.1.1.2 Confirm that the configuration documentation is complete and accurate; and

5.6.4.1.1.3 Establish or verify the PBL for the item.

5.6.4.1.2 The Contractor must perform a detailed audit of engineering drawings, specifications, Technical Data and tests utilized in production of the Configuration Item, including the design documentation, listings, and manuals for software Configuration Items. The review includes an audit of the released engineering documentation and quality control records to make sure the as-built or as-coded configuration is reflected by this documentation.

5.6.4.1.3 The Contractor must conduct a PCA on the first production article of a Configuration Item and those that are a re-procurement of a Configuration Item already in the inventory.

5.6.4.1.4 Satisfactory completion of a PCA for a Configuration Item results in the establishment of the Product Baseline for that Configuration Item.

5.6.4.2 PCA Entry Criteria

5.6.4.2.1 The Contractor must meet the following entry criteria for the PCA to take place:

5.6.4.2.1.1 The Contractor has submitted the final draft of the product specification for the Configuration Item to be audited to the TA for review prior to PCA;

5.6.4.2.1.2 The Contractor has provided the TA with a current listing of all deviations and waivers against the item, either requested of, or approved by DND;

5.6.4.2.1.3 The Contractor has provided the TA with identification of the Configuration Item to be audited in terms of nomenclature, specification identification number and Configuration Item number; and

5.6.4.2.1.4 The Contractor has provided the TA with drawings, part numbers and build status of the Configuration Item subject to audit, including serial numbers and software identification.

5.6.4.3 PCA Exit Criteria

5.6.4.3.1 The Contractor must meet the following exit criteria for the PCA to complete:

5.6.4.3.1.1 CDRL items that were part of the PCA entry criteria have been satisfactorily discussed;

5.6.4.3.1.2 All risks identified during the course of PCA have been documented and analyzed, and the risks with proceeding to the next phase are acceptable to the TA;

5.6.4.3.1.3 Configuration differences between the Configuration Item qualified and the Configuration Item being audited have been made a matter of record in the PCA minutes; and

5.6.4.3.1.4 All build records for the Configuration Item confirm that the Configuration Item has been built IAW the drawings and specifications.

# 6.0 VERIFICATION

## 6.1 Verification Management

6.1.1 Verification Planning

6.1.1.1 The Contractor must address planning for, and management of, the Verification program in the SEMP.

6.1.1.2 The Contractor must conduct all Verification activities for the contract IAW the approved SEMP and approved Acceptance Test Plan and Procedures (ATP&Ps) for each Verification phase.

6.1.2 DND Involvement in Acceptance Verification (AV)

6.1.2.1 The Contractor must invite the TA, or representatives appointed by the TA, to witness, and participate in when applicable, all AV activities.

6.1.2.2 Unless otherwise notified by the TA, the TA or appointed representative(s) must witness and participate in AV activities.

6.1.2.3 Unless the TA has notified that they will not witness an AV activity IAW para 6.1.2.2, the Contractor must not conduct that AV activity in the absence of TA or appointed representative(s).

6.1.2.4 Unless otherwise agreed in writing by the TA, the Contractor must provide the TA, or representatives appointed by the TA, with at least 42 Calendar Days advance notice of the start date and time of all AV activities for the WTS.

6.1.3 Test Readiness Reviews (TRRs)

6.1.3.1 Prior to the commencement of each AV phase, the Contractor must hold a MSR, a TRR, IAW the approved SEMP, which:

6.1.3.1.1 Confirms the accuracy and completeness of the ATP&Ps for the verification phase;

6.1.3.1.2 Confirms the status of the applicable Configuration Baseline and of the system, item, or process under test;

6.1.3.1.3 Reviews results from preceding test activities, where applicable to the Acceptance Verification activity;

6.1.3.1.4 Assures that the relevant Item Under Test (IUT) is ready for testing. The IUT may be a CI, group of CIs, subsystem, component or system;

6.1.3.1.5 Assures that any DND resources required are available and prepared for formal testing; and

6.1.3.1.6 Assures that the Contractor is prepared for formal testing.

6.1.3.2 The TRR should be held after the test procedures for formal testing have been dry run against the same configuration of the IUT as that which will be presented

for formal testing. A technical understanding of the informal test results arising from the dry run should be established.

6.1.3.3 TRR Entry Criteria

6.1.3.3.1 The Contractor must meet the following entry criteria for the TRR to take place:

6.1.3.3.1.1 The status of all design and test documentation for the IUT has been established and declared to the TA;

6.1.3.3.1.2 The updated RTVM showing traceability from IUT requirements to the test procedures and contract test requirements has been established and declared to the TA; and

6.1.3.3.1.3 Action items from any previous reviews affecting TRR have been successfully addressed or action plans agreed with the TA.

6.1.3.4 TRR Exit Criteria

6.1.3.4.1 The Contractor must meet the following exit criteria for the TRR to complete:

6.1.3.4.1.1 All required resources including personnel, equipment and facilities are available for formal testing;

6.1.3.4.1.2 The IUT and test procedures are deemed to be satisfactory by both the Contractor and the TA to support formal testing;

6.1.3.4.1.3 Plans for the measurement and analysis program for the next AV phase have been agreed by the TA, including the measures to be collected, associated collection methods, and analysis techniques; and

6.1.3.4.1.4 All risks identified during the course of TRR have been documented and analyzed, and the risks with proceeding to the next phase are acceptable to the TA.

6.1.4 Failure Reporting and Analysis

6.1.4.1 During AV of the WTS elements, the Contractor must establish, maintain and update a Problem Resolution System that:

6.1.4.1.1 collects Failure data (including applicable CI identification and configuration data);

6.1.4.1.2 classifies the Failure Severity IAW the following table:

| Failure Severity | Applies if a problem could: |
|---|---|
| 1 | a. prevent the accomplishment of an operational or mission essential capability<br>b. jeopardize safety, security, or other requirement designated 'critical' |
| 2 | a. adversely affect the accomplishment of an operational or mission essential capability and no work-around solution is known<br>b. adversely affect technical, cost, or schedule risks to the Contract or to life-cycle support of the system, and no work-around solution is known |
| 3 | a. adversely affect the accomplishment of an operational or mission essential capability but a work-around solution is known<br>b. adversely affect technical, cost, or schedule risks to the Contract or to life-cycle support of the system, but a work-around solution is known |
| 4 | a. result in user/operator inconvenience or annoyance but does not affect a required operational or mission essential capability<br>b. result in inconvenience or annoyance for development or support personnel, but does not prevent the accomplishment of those responsibilities |
| 5 | any other effect |

6.1.4.1.3 Documents the failures and associated failure modes;

6.1.4.1.4 Defines corrective actions;

6.1.4.1.5 Identifies the scope of additional verification activities required to confirm that the failure has been remedied; and

6.1.4.1.6 Maintains a history of all transactions.

6.1.4.2 The Contractor must provide all facilities and assistance reasonably required by the DND in order for the DND to access the Problem Resolution System for the duration of the contract.

6.1.4.3 The Contractor must submit for TA approval all corrective actions to address safety-related failures that occur during AV that are assigned a Failure Severity classification of either 1 or 2.

6.1.4.4 The Contractor must invite the TA, or representatives appointed by the TA, to witness corrective actions and the closure of failures during AV that are assigned a Failure Severity classification of either 1 or 2.

6.1.4.5 The Contractor must incorporate all updates to failures and associated reports into the Problem Resolution System.

6.1.5 Regression Testing

6.1.5.1 Subject to para. 6.1.5.2, the Contractor must repeat an AV activity (i.e. conduct regression testing) if:

6.1.5.1.1 Changes are made to the configuration of a WTS component after starting an AV activity;

6.1.5.1.2 The analysis of test data and the assessment of test results against pass/fail criteria indicate that the item under test has failed to meet its applicable requirements;

6.1.5.1.3 The analysis of test data and the assessment of test results against pass/fail criteria are inconclusive; or

6.1.5.1.4 The Contractor deviates from the ATP&Ps without prior approval by the TA.

6.1.5.2 If the Contractor can demonstrate to the satisfaction of the TA, by regression analysis or any other such means that changes to the configuration do not impact on an AV activity, then subject to the TA's approval of the regression analysis, or any other such means, the Contractor will not be required to repeat that AV activity.

## 6.2 Acceptance Verification

6.2.1 General

6.2.1.1 The Contractor must conduct AV on equipment that is of the same hardware, software, firmware and data configuration (as applicable) as that which will be offered for acceptance, unless otherwise agreed by the TA.

6.2.1.2 The Contractor must confirm that the test environment, all test equipment and software test tools, if applicable, used for the AV of the WTS are IAW the approved ATP&P.

6.2.1.3 The Contractor must maintain a log during all AV activities to record applicable information including test details, the configuration of the items under test, the ATP&Ps used and any deviations from them, the test results, and any configuration changes and maintenance actions.

6.2.2 AV Phases

6.2.2.1 The Contractor must conduct the following phases of AV:

6.2.2.1.1 **Prototype Water Filtration and Treatment System (PWFTS) Verification**, at which verification of a full-scale replication, with the same system functionality and performance, of the Water Filtration and Treatment System as per paragraph A1.2.1.4.

6.2.2.1.2 **WTS First Production Article Verification**, at which verification of the first production article is conducted to ensure that the first production article is suitable for delivery.

6.2.3 Acceptance Verification

6.2.3.1 The Contractor must verify that the delivered WTS complies with the FBL, following the updated and approved RTVM.

6.2.3.2 The Contractor must ensure that the PWFTS passes the Water Quality Tests outlined in Appendix A5.0 to ANNEX A.

6.2.3.2.1 The pass criteria for each of the seven (7) Water Quality Tests are outlined in the Evaluation Criteria portion of each Source Water Challenge.

6.2.3.3 The Contractor must ensure that the WTS passes a Static Rollover Threshold (SRT) of not less than 29° in either direction (roadside and curb).

6.2.3.3.1 The SRT will be measured using the procedures outlined in SAE J2180-2011, Tilt Table Procedure for Measuring the Static Rollover Threshold for Heavy Trucks.

6.2.3.3.2 The SRT test must be conducted on the WTS in the following configurations:

6.2.3.3.2.1 The WTS in its primary configuration of WTU and MEU on the Trailer; and

6.2.3.3.2.2 The WTS configured as per 6.2.3.3.2.1 with the addition of the necessary equipment for Arctic Operations cross loaded and stowed in the MEU.

6.2.3.4 The Contractor must ensure that the WTU, along with required components from the MEU necessary for the production of water, passes a high temperature test.

6.2.3.4.1 The test must be conducted in a Climatic Chamber as per MIL-STD-810H, 501.7, Method 501.7, High Temperature.

6.2.3.4.2 The test duration must be 20 hours not including setup time.

6.2.3.4.3 The test must be at an ambient temperature of 49ºC +/- 2ºC.

6.2.3.4.4 The source water temperature must be 30ºC +/- 2ºC.

6.2.3.4.5 The test will be considered successful if the WTU shows continuous production of 625 l/hr while in double pass without malfunction, overheating or the need to shut down other than for the purpose of refueling.

6.2.3.5 The Contractor must ensure that the WTU, along with the required components from the MEU and the ASU necessary for the production of water, passes a Low Temperature Test.

6.2.3.5.1 The test duration must be 24 hours not including setup time.

6.2.3.5.2 During the 24-hour period of the test, the WTU must be cold soaked for 4 hours, run for 4 hours, shut down for 4 hours, run for 4 hours, shut down for 4 hours and finally run for 4 hours.

6.2.3.5.3 The test must be at an ambient temperature of -40ºC +/- 2ºC.

6.2.3.5.4 The source water temperature must be between 4ºC and 5ºC inclusive.

6.2.3.5.5 The test will be considered successful if the WTU shows continuous production of 625 L/hr while in double pass without malfunction, freezing, or need to shut down other than for the purpose of refueling.

6.2.3.6 The Contractor must ensure that the WTU and MEU, complete with items necessary for the production of water in an Arctic environment stowed in the MEU, passes shock and vibration exposure IAW with MIL-STD-810H, Method 516.8, Transportation shock (Procedure II) Table 516.8-VII, page 516.8-25, and MIL-STD-810H, Method 514-8, Transportation Vibration, Table 514.8C-IV, page 514.8C-9 respectively.

6.2.3.6.1 Following the shock and vibration exposure, the Contractor must complete a detailed analysis and function tests to demonstrate that all components, systems and subsystems remain functional and operate within designed tolerances.

6.2.3.6.2 Any damage or degradation defined as follows constitutes a test failure:

6.2.3.6.2.1 Operation of the WTS including components, systems and subsystems is prevented or reduced;

6.2.3.6.2.2 Operation of the WTS would make further operation of the WTS unsafe; or

6.2.3.6.2.3 Operation of the WTS would lead to further damage to components, systems and subsystems.

6.2.3.7 The Contractor must ensure that the WTU and components necessary for the production of water passes the audible noise limit test for an eight hour exposure.

6.2.3.7.1 The test must be conducted IAW MIL-STD-810H Method 515.8 Acoustic Noise.

6.2.3.7.2 The test will be considered successful if the audible noise level generated does not exceed 87 dB (A) at 1m away from the center of the noise source and does not exceed 70 dB (A) at 7m away from the center of the noise source.

6.2.3.8 The Contractor must ensure that the WTS in its primary mode of operation of WTU and MEU on the Trailer as well as the items necessary for the production of water in an Arctic environment stowed in the MEU, passes a Road and Cross Country Test.

6.2.3.8.1 The testing will consist of towing the WTS in accordance with the WTS Mission Profile below. Suitable roads, Trails, and Cross-Country routes must be mutually agreed upon by Canada and the manufacturer. To assist in this determination, the descriptions in the Mission Profile below as well as the description in Mil STD-810H standard 514.8, Annex C pages 514.8C – 18 and 19, Para 2.3, Category 6, sub para a., sub sub paras 1-

5 must be used. The WTS as configured in 6.2.3.8, must undergo five (5) times the equivalent of one (1) mission profile.

| Mission | Description | Quantity | Approximate Speed |
|---|---|---|---|
| Total distance | | 200 km | Average speed across entire distance is 30 km/h |
| Highway | Paved road | 20% of total distance | 100 km/h |
| Secondary | Gravel road | 50% of total distance | 60 km/h |
| Trail | Severe washboard and cut lines | 25% of total distance | 20 km/h |
| Cross Country | Rocky surfaces, plowed fields and through mud and sand | 5% of total distance | 3-5 km/h |
| Maximum Speed | Pass or downhill dash | | 110 km/h |
| Fording | Water obstacle must be a minimal depth of 750 mm | Once per mission | 3-5 km/h |
| Ascend Slope | Slope must be a 60%. Surface is hard and dry and free of loose material.<br><br>Intermediate stop approximately half way up the slope. | Once per mission | 3-5 km/h |
| Descend Slope | Slope must be a 60%. Surface is hard and dry and free of loose material.<br><br>Intermediate stop approximately half way down the slope. | Once per mission | 3-5 km/h |
| Traverse Slope | 30% side slope. Surface is hard and dry and free of loose material.<br><br>Intermediate stop approximately half way through the side slope. | Twice per mission: Once with driver facing up and once with driver facing down the slope | 3-5 km/h |
| Hard Braking | | 25 times per mission | |
| Acceleration | | 25 times per mission | |

Table – Transportation Mission Profile

6.2.3.8.2 Following the test, the Contractor must perform a detailed analysis and function tests to demonstrate that all components, systems and subsystems remain functional and within acceptable tolerances.

6.2.3.8.3 Any damage or degradation defined as follows constitutes a test failure:

6.2.3.8.3.1 Operation of the WTS including components, systems and subsystems is prevented or reduced;

6.2.3.8.3.2 Operation of the WTS would make further operation of the WTS unsafe; or

6.2.3.8.3.3 Operation of the WTS would lead to further damage to components, systems and subsystems.

6.2.4 The Contractor must provide ATP&Ps IAW CDRL WTS-SE-107 at Appendix A2.15 (page 119) to ANNEX A and its associated DID WTS-SE-107 at Appendix A3.15 (page 174) to ANNEX A, which are necessary for conduct of AV consistent with the approved SEMP.

6.2.5 The Contractor must provide Acceptance Test Reports (ATRs) IAW CDRL WTS-SE-108 at Appendix A2.16 (page 120) to ANNEX A and its associated DID WTS-SE-108 at Appendix A3.16 (page 177) to ANNEX A, which are necessary for the evaluation of AV results, consistent with the approved ATP&Ps.

# 7.0 QUALITY ASSURANCE

## 7.1 Contractor Quality Responsibilities

7.1.1 The Contractor must have a Quality Management System (QMS) Certified to ISO 9001:2015 'Quality Management Systems – Requirements', or other internationally accepted equivalent standard as agreed by DND Directorate of Quality Assurance (DQA), at Contract Award.

7.1.2 The Contractor must maintain and apply the QMS in para 7.1.1 to all phases of the contract and must notify the TA of any changes to the Certification status of the Contractor.

7.1.3 During progress of work under the contract, the DQA Quality Assurance Representative (QAR) may perform audit and surveillance activities in relation to the work performed, including any of the following:

7.1.3.1 System Audit;

7.1.3.2 Process Audit; or

7.1.3.3 Product Audit.

7.1.4 The Contractor must provide all facilities and assistance reasonably required by the QAR in order for the QAR to perform audit and surveillance activities as described in para 7.1.3.

7.1.5 The Contractor must ensure that all Subcontractors have quality management systems that are appropriate to the work required under the Subcontract.

7.1.6 The Contractor must ensure that all work performed under a Subcontract meets the requirements of the QMS to be applied by the Contractor under para. 7.1.1.

## 7.2 Non-Conforming Deliveries

7.2.1 If the Contractor seeks to use non-conforming materials or work in the deliveries, the Contractor must follow D-02-006-008/SG-001 the Design Change, Deviation and Waiver Procedure and provide the related and completed form, which will be provided to the Contractor by the QAR when necessary. The following is a summary of the related form:

7.2.1.1 FORM DND 675 – Request for Waiver or Deviation – is used to request and obtain waivers to permit the acceptance of items, which through error during manufacture, do not conform to the technical data requirements of the contract **OR** is used to request and obtain authorization for a temporary departure from the technical data requirements of the contract to be incorporated in any number of items being manufactured to the contract.

7.2.1.1.1 Waiver – The written authorization granted after manufacture to permit the acceptance of items which during production or after having been submitted for inspection, are found to depart from the technical data requirements of the contract, but are considered suitable for use "as is" or after approved repair.

7.2.1.1.2 Deviation – Written authorization for a temporary departure, granted prior to the manufacture of an item, to depart from a particular performance or

design requirement of a contract, specification, or referenced document, for a specific number of items, a specified service, or a specific period of time. This departure is NOT recorded in the technical data for future manufacture.

7.2.2 The DND may approve or not approve the application for a Waiver or Deviation in its sole and absolute discretion and may provide approval subject to any amendments to, or conditions on, the approval of the application for a Waiver or Deviation which are deemed necessary by DND.

7.2.3 Any approval of an application for a Waiver or Deviation will not release the Contractor from due performance of its obligations under the contract, except to the extent specifically set out in the approved application for a Waiver or Deviation.

7.2.4 If an application for a Waiver or Deviation is approved, the Contractor must undertake all actions to rectify the non-conformance IAW the timeframes and any other requirements for such rectification, or to meet any conditions specified in the approved application for a Waiver or Deviation.

7.2.5 When the Contractor has rectified the non-conformance(s) in an approved application for a Waiver or Deviation, it must notify the QAR and seek closure of the application for a Waiver or Deviation by submitting, with the notice, evidence to demonstrate that the applicable non-conformance(s) have been rectified.

# 8.0 INTEGRATED LOGISTICS SUPPORT (ILS)

## 8.1 Maintenance Concept

8.1.1 For the purposes of the ILS, the MEU is considered part of the WTU and must be included and treated as such in ILS deliverables.

8.1.2 The **WTU**, **ASU and WSU** will be maintainable by CAF operators and technicians in both field and base environments, with maintenance tasks generally divided as follows:

8.1.2.1 **Operator Maintenance** – consisting generally of simple tasks such as preliminary diagnosis of faults, visual inspections, consumables replenishment, minor preventive and corrective maintenance, and cleaning.

8.1.2.1.1 Any Operator Maintenance task requiring support equipment must have that support equipment available to the Operator and mounted on, or otherwise supplied with, the WTU, ASU, or WSU.

8.1.2.2 **Technician Maintenance, First Line** – consisting of preventive and minor corrective maintenance tasks by repair or replacement of parts, in the field, using the standard maintenance tools of the EME and WFE trades (T VEH 00129 and EPPE 00305) and any provided with the WTU, ASU or WSU. Task duration generally less than four (4) hours.

8.1.2.3 The more in-depth maintenance tasks, consisting of major corrective maintenance tasks, reconditioning of assemblies and component rebuilds, will be done through the Support Contract.

8.1.3 The **WTS Trailer** will be maintainable by CAF operators and technicians in both field and base environments, with maintenance tasks generally divided as follows:

8.1.3.1 **Operator Maintenance** – consisting generally of simple tasks such as preliminary diagnosis of faults, visual inspections, minor preventive and corrective maintenance, and cleaning. Task duration less than one (1) hour.

8.1.3.1.1 Any Operator Maintenance task requiring support equipment must have that support equipment available to the Operator and mounted on, or otherwise supplied with, the WTS Trailer.

8.1.3.2 **Technician Maintenance, First Line** – consisting of preventive and minor corrective maintenance tasks by repair or replacement of parts, in the field, using the standard maintenance tools of the EME and WFE trades and any provided with the WTS Trailer. Task duration generally less than four (4) hours.

8.1.3.3 **Technician Maintenance, Second Line** – consisting of major corrective maintenance requiring additional tools, specialized personnel, STTE, controlled environmental conditions or specific infrastructure requirements. Task duration generally between four (4) and twenty-four (24) hours.

## 8.2 Instruments, Decals, Data Plates and Warnings

8.2.1 The Contractor must deliver all instruments, decals and data plates marked in metric units.

8.2.2 Where international symbols are not possible, the Contractor must provide bilingual markings in English and Canadian French, as per paragraph 8.3.6.

8.2.3 The Contractor must provide warning and precautionary data plates in both official languages of Canada (English and Canadian French) in order to protect personnel and equipment, as per paragraph 8.3.6.

## 8.3 Technical Publication Package

8.3.1 The Contractor must prepare and deliver the following Technical Publications:

8.3.1.1 WTS Operator Manual

8.3.1.1.1 The Contractor must provide a WTS Operator Manual IAW CDRL WTS-ILS-202 at Appendix A2.18 (page 122) and its associated DID WTS-ILS-202 at Appendix A3.18 (page 180) to this ANNEX A:

8.3.1.2 WTU Operator Quick Reference Card

8.3.1.2.1 The Contractor must provide a WTU Operator Quick Reference Card IAW CDRL WTS-ILS-203 at Appendix A2.19 (page 123) and its associated DID WTS-ILS-203 at Appendix A3.19 (page 182) to ANNEX A.

8.3.1.2.2 Front Matter is not required for the WTU Operator Quick Reference Card (see paragraph 6.3.2).

8.3.1.3 WTS Maintenance Manual

8.3.1.3.1 The Contractor must provide a WTS Maintenance Manual IAW CDRL WTS-ILS-204 at Appendix A2.20 (page 124) and its associated DID WTS-ILS-204 at Appendix A3.20 (page 184) to this ANNEX A.

8.3.1.4 WTS Permissive Repair Schedule and Standard Repair Times

8.3.1.4.1 The Contractor must provide a WTS Permissive Repair Schedule and Standard Repair Times IAW CDRL WTS-ILS-205 at Appendix A2.21 (page 125) and its associated DID WTS-ILS-205 at Appendix A3.21 (page 186) to this ANNEX A.

8.3.1.5 WTS Illustrated Parts Manual

8.3.1.5.1 The Contractor must provide a WTS Illustrated Parts Manual IAW CDRL WTS-ILS-206 at Appendix A2.22 (page 126) and its associated DID WTS-ILS-206 at Appendix A3.22 (page 187) to this ANNEX A.

8.3.1.5.2 The WTS Illustrated Parts Manual does not need to be provided in Canadian French.

8.3.1.6 WTS Operator Training Package

8.3.1.6.1 The Contractor must provide an WTS Operator Training Package IAW CDRL WTS-ILS-207 at Appendix A2.23 (page 127) and its associated DID WTS-ILS-207 at Appendix A3.23 (page 189) to ANNEX A.

8.3.1.7 WTU and ASU Technician Training Package

8.3.1.7.1 The Contractor must provide a WTU and ASU Technician Training Package IAW CDRL WTS-ILS-208 at Appendix A2.24 (page 128) and its associated DID WTS-ILS-208 at Appendix A3.24 (page 191) to ANNEX A.

8.3.1.8 WTS Preservation, Storage and Reactivation Instructions

8.3.1.8.1 The Contractor must provide a WTS Preservation, Storage and Reactivation Instructions IAW CDRL WTS-ILS-209 at Appendix A2.25 (page 129) and its associated DID WTS-ILS-209 at Appendix A3.25 (page 193) to Annex A.

8.3.1.9 WTS Stowage, Shipping and Handling Instructions

8.3.1.9.1 The Contractor must provide a WTS Stowage, Shipping and Handling Instructions IAW CDRL WTS-ILS-210 at Appendix A2.26 (page 130) and its associated DID WTS-ILS-210 at Appendix A3.26 (page 195) to ANNEX A.

8.3.1.10 WTS Equipment Data Summary

8.3.1.10.1 The Contractor must provide an WTS Equipment Data Summary IAW CDRL WTS-ILS-211 at Appendix A2.27 (page 131) and its associated DID WTS-ILS-211 at Appendix A3.29 (page 197) to ANNEX A.

8.3.1.11 MEU, ASU and WSU Stowage Maps

8.3.1.11.1 The Contractor must provide **MEU, ASU and WSU Stowage Maps** IAW CDRL WTS-ILS-212 at Appendix A2.30 (page 95) to Annex A, and its associated DID WTS-ILS-212 at Appendix A3.30 (page 147).

8.3.1.11.2 Front Matter is not required for the MEU, ASU and WSU Stowage Maps (see paragraph 6.3.2).

8.3.1.12 WTU Process and Flow Diagrams

8.3.1.12.1 The Contractor must provide a **WTU Process and Flow Diagrams** IAW CDRL WTS-ILS-213 at Appendix A2.31 (page 96) to Annex A, and its associated DID WTS-ILS-213 at Appendix A3.31 (page 149).

8.3.1.12.2 Front Matter is not required for the WTU Process and Flow Diagrams (see paragraph 6.3.2).

8.3.2 Front Matter

8.3.2.1 The Contractor must include the following in each Technical Publication (except where noted above):

8.3.2.1.1 A cover page (a template will be provided by the Integrated Logistics Support Manager (ILSM)) showing the date the publication was issued and the model/system designation;

8.3.2.1.2 A List of Effective Pages;

8.3.2.1.3 A Revision Control Table;

8.3.2.1.4 A detailed Table of Contents and List of Figures & Tables; and

8.3.2.1.5 An Acronyms and Abbreviations table

8.3.3 Supplementary Information

8.3.3.1 The Contractor must provide supplementary information, in the portions of text that require it, with one or more of the following notices, in the order listed:

8.3.3.1.1 **Danger.** The danger advisory will be used to draw attention to an extreme, violent and continuous hazard to life;

8.3.3.1.2 **Warning.** The warning advisory will be used to emphasize an operating or maintenance procedure, practice, condition, statement, which if not strictly observed, could result in injury to or death of personnel;

8.3.3.1.3 **Caution.** The caution advisory will be used to emphasize an operating or maintenance procedure, practice, condition, statement, which if not strictly observed, could result in maintenance, damage to or destruction of equipment, loss of mission effectiveness or long-term health hazards to personnel;

8.3.3.1.4 **Note.** The note will be used to point out a procedure, event or practice that it is desirable to highlight; and,

8.3.3.1.5 **Example.** The example will be used when required to clarify the preceding text.

8.3.4 The Contractor must provide the following certificates, for each accepted first-language Publication produced under Annex A paragraph 8.3, to the DND ILSM for approval:

8.3.4.1 DND590 - Certificate of Validation; and,

8.3.4.2 DND591 - Certificate of Compliance.

8.3.5 Copyright - Foreground and Background Information

8.3.5.1 The Contractor must incorporate the copyright symbol and one of the following notices into the Technical Publications, for all Foreground and Background information that is subject to copyright regardless of the form or medium upon which it is recorded:

8.3.5.1.1 "© (insert year) (insert IP owner). This deliverable was delivered under Contract no. XXXX and contains Foreground Intellectual Property (IP). Her Majesty the Queen in Right of Canada has a royalty-free and perpetual license to the IP and is permitted to use, reproduce, modify, and translate, including authorizing contractors to reproduce, modify, and translate, in whole or in part the deliverable for all government purposes including competitive tendering. Refer to the contract terms for additional details as required."

8.3.6 Official Language Requirements

8.3.6.1 The Contractor must deliver all Technical Publications in English and Canadian French (unless indicated above).

8.3.6.2 The Contractor must have all Technical Publications translated by certified translators, such as members of an authorized provincial association of translators, to ensure the quality of translated text.

8.3.6.3 The Contractor must ensure all translations are consistent with approved DND terminology. Approved terminology sources, in order of priority, are as follows:

8.3.6.3.1 Canadian Oxford Dictionary Second Edition (for English);

8.3.6.3.2 Le Petit Robert Edition 2017 (for French); and

8.3.6.3.3 Termium, PSPC Translation Bureau Linguistic Data Bank (http://www.termiumplus.gc.ca/);

8.3.6.3.4 The International Electrotechnical Commission's *Electropedia* Online Vocabulary (http://www.electropedia.org/);

8.3.6.3.5 Terminology agreed-upon between the Contractor and DND ILSM, especially for terms specific to the WTS.

8.3.6.4 The Contractor must review and accept responsibility for the validity of all (both their own and all sub-Contractors) information found in the Technical Publications.

## 8.4 Provisioning Documentation

8.4.1 The Provisioning Documentation (PD) lists and describes in detail the parts that make up the WTS as well as all specialized and specific items required to support the use and maintenance of the WTS. The PD allows the WTS's Integrated Logistics Support Manager (ILSM) to plan and implement a sparing and support strategy.

8.4.2 Included in the PD are all the procurable parts — either from the Contractor or a third-party — of the WTS to the Lowest Replaceable Unit (LRU). Also considered procurable parts are the consumables required to operate and maintain the WTS (chemicals, specific lubricants, etc.) and specialized equipment (special tools, training aids, transport containers, etc.) specific to the WTS.

8.4.3 The Contractor must prepare and deliver the following Provisioning Documentation:

8.4.3.1 Provisioning Parts Breakdown

8.4.3.1.1 The Contractor must provide a Provisioning Parts Breakdown IAW CDRL WTS-ILS-214 at Appendix A2.30 (page 132) and its associated DID WTS-ILS-214 at Appendix A3.30 (page 199) to this ANNEX A.

8.4.3.2 Supplementary Provisioning Technical Documentation

8.4.3.2.1 The Contractor must provide Supplementary Provisioning Technical Documentation IAW CDRL WTS-ILS-215 at Appendix A2.31 (page 135) and its associated DID WTS-ILS-215 at Appendix A3.31 (page 206) to this ANNEX A.

8.4.3.3 Special Tools & Test Equipment List

8.4.3.3.1 The Contractor must provide a Special Tools & Test Equipment List IAW CDRL WTS-ILS-216 at Appendix A2.32 (page 136) and its associated DID WTS-ILS-216 at Appendix A3.32 (page 208) to this ANNEX A.

8.4.3.4 Equipment Delivery Status Report

8.4.3.4.1 The Contractor must provide an Equipment Delivery Status Report IAW CDRL WTS-ILS-217 at Appendix A2.35 (page 100) to Annex A, and its associated DID WTS-ILS-217 at Appendix A3.36 (page 158).

## 8.5 Initial Provisioning Guidance Conference

8.5.1 The Contractor must hold and chair an Initial Provisioning Guidance Conference (IPGC).

8.5.1.1 The purpose of the IPGC is to clarify and explain the requirements of the Provisioning Documentation referred to in the contract in preparation for the Initial Provisioning Conference.

8.5.1.2 The IPGC team will normally consist of no more than two (2) DND representatives and should last no longer than one (1) day.

8.5.2 Refer to Meeting Documentation requirements found at ANNEX A para. 3.6.6.

## 8.6 Initial Provisioning Conference

8.6.1 The Contractor must hold and chair an Initial Provisioning Conference (IPC). The IPC will occur after the Contractor has delivered Provisioning Documentation (PD) suitable for a successful IPC as determined by the DND ILS Manager.

8.6.2 The purpose of an IPC is to allow DND to verify that the Provisioning Documentation reflects the current and complete configuration of the equipment being procured by comparing it against the Illustrated Parts Manual and Supplementary Provisioning Technical Documentation. It is also used to select the range of spares required to support the system during an initial period of service of two (2) years. For this purpose, the Contractor must provide:

8.6.2.1 A suitable conference facility with projector(s), and three (3) unrestricted, hard-wired, broadband Internet access points through Ethernet (RJ45) connections;

8.6.2.2 Engineering and product support assistance;

8.6.2.3 The equipment for physical examination;

8.6.2.4 Engineering, reliability and maintainability data; and

8.6.2.5 Modification data, if applicable.

8.6.3 Refer to Meeting Documentation requirements found at ANNEX A para. 3.6.6.

## 8.7 Identification Plates

8.7.1 The Contractor must provide Identification Plates – Design Template & Populated Designs IAW CDRL WTS-ILS-218 at Appendix A2.34 (page 137) and its associated DID WTS-ILS-218 at Appendix A3.34 (page 210) to this ANNEX A.

8.7.2 The Contractor must attach Identification Plates to the following components for ease of tracking within the Canadian Forces Supply System:

8.7.2.1 Prime Equipment;

8.7.2.2 Spares;

8.7.2.3 STTE;

8.7.2.4 Training Equipment;

8.7.2.5 Transportation, Shipping, Storage Containers that are not single-use;

8.7.2.6 Support Equipment (excluding common tools), and

8.7.2.7 Automatic Test Equipment.

## 8.8 Controlled & Non-Controlled Goods List

8.8.1 Contractor must provide the Controlled & Non-Controlled Goods List with the Demilitarization Code (DMC) IAW WTS-ILS-219 at Appendix A2.35 (page 139) and its associated DID WTS-ILS-219 at Appendix A3.35 (page 213) to this ANNEX A.

## 8.9 Identification Labels for Storage and Shipment, and Packaging Codes

8.9.1 The Contractor must supply all parts and equipment, packaged and packed as per D-LM-008-001/SF-001 following:

8.9.1.1 Level B Limited Military Package;

8.9.1.2 Level B Limited Military Pack;

8.9.2 The Contractor must label all packaging, produced under 8.9 above, as per D-LM-008-002/SF-001, using D-LM-008-011/SF-001 to prepare the required codes for packaging and preservation.

8.9.3 The Contractor must provide Identification Labels for Storage and Shipment, and Packaging Codes IAW CDRL WTS-ILS-220 at Appendix A2.36 (page 140) to Annex A, and its associated DID WTS-ILS-220 at Appendix A3.36 (page 215) to this ANNEX A.

## 8.10 List of Items to be Supported (for Support SOW)

8.10.1 The Contractor must provide a List of Items to be Supported IAW CDRL WTS-ILS-221 at Appendix A2.37 (page 141) to Annex A, and its associated DID WTS-ILS-221 at Appendix A3.37 (page 217) to this ANNEX A.

## 8.11 Training Session

8.11.1 The Contractor must provide the Training Session(s) after delivery of the first WTS.

8.11.1.1 Scheduling of the Training Session(s) will be done after contract award, and jointly planned between the DND and the Contractor.

8.11.2 The Contractor must provide Training Session(s) consisting of: (Note: Quantity and location of sessions described in the deliverables table)

8.11.2.1 Operator Training Session (train-the-trainer type) for one (1) to 10 students per course, with a course length of four (4) days.

8.11.3 The Contractor must provide the Training Session(s) in English. The instructor(s) must be bilingual or have assistance from a bilingual Subject Matter Expert in order to understand and answer questions from students in both official languages; English and Canadian French.

8.11.4 The Contractor must provide Instructor(s) that are Subject Matter Experts on the WTS equipment being provided.

8.11.5 The Contractor must use the approved and accepted **WTS Operator Training Package** for the Training Session(s), and course lessons must follow the content found within the training package.

8.11.6 The Contractor must provide the course material listed within the **WTS Operator Training Package** CDRL as being 'Issued to Students at Training Session(s)', and all course material and handouts must be provided in English and Canadian French.

8.11.7 The Contractor must use the WTS(s) and additional training material identified in the **WTS Operator Training Package Instructor Lesson Plan**, for the Training Session.

8.11.7.1 The Contractor must provide the additional training material that is listed in the **WTS Operator Training Package Instructor Lesson Plan** as 'supplied by the Contractor'.

8.11.7.2 The Contractor must set-up the WTS(s) and additional training material that is listed in the **WTS Operator Training Package Instructor Lesson Plan** as 'supplied by the Contractor', for the Training Session.

## 8.12 Warranty Support Plan

8.12.1 The Contractor must provide a **Warranty Support Plan** IAW CDRL WTS-ILS-222 at Appendix A.2.40 to Annex A, and its associated DID WTS-ILS-222 at Appendix A.3.40.

## 8.13 Data Deliverable Format

8.13.1 Unless otherwise specified as a specific requirement, the Contractor must deliver all of the soft copies of data deliverables, in formats compatible with the office software currently in use by the DND as listed:

8.13.1.1 Microsoft (MS) Windows 7 Enterprise Operating System (OS), Service Pack 1;

8.13.1.2 MS Internet Explorer (IE) 9.0 with 256 Bit Encryption;

8.13.1.3 MS Office Professional Plus 2013 (Word, Excel, Access, PowerPoint and Outlook);

8.13.1.4 Adobe Acrobat X; and

8.13.1.5 WinZip 8.1 SR-1;

# 9.0 ENVIRONMENTAL HEALTH AND SAFETY

## 9.1 General

9.1.1 Environmental Health and Safety (EHS) consideration must be incorporated and documented into the decision making process for the Work performed under this Contract. EHS documentation must be maintained within the project file throughout the life of this Contract. The Contractor must provide for and allow DND inspection and monitoring of EHS documentation throughout the life of the contract.

9.1.2 Polychlorinated Biphenyls (PCBs), halocarbons (as identified within the SOR/99-7 - Ozone-Depleting Substances Regulations, 1998), and asbestos must not be incorporated into the design, operation and maintenance of the equipment, and products used in equipment support activities.

9.1.3 The Contractor must identify and report all sources of mercury contained and used within the design, operation and maintenance of the equipment, and products used in equipment support activities.

9.1.4 The Department is committed to the Federal programs to reduce and eliminate emissions from toxic substances. Contractors must identify and submit justifications for the use of all regulated products and those containing substances identified within the Accelerated Reduction/Elimination of Toxics (ARET, http://www.ec.gc.ca/nopp/aret/en/list.cfm), National Pollutant Release Inventory (NPRI, http://www.ec.gc.ca/pdb/npri/npri_home_e.cfm) and List of Challenge Substances (http://www.chemicalsubstanceschimiques.gc.ca/challenge-defi/list_e.html), and also for products containing heavy metals (heavy metals are those identified within Schedule 1 of the Canadian Environmental Protection Act (CEPA)) to the technical authority for approval.

9.1.5 Canada Labour Code, Part II dictates that the least hazardous materials should be used at the workplace. Therefore, the Contractor is to strive to use the least hazardous product that meets the requisite performance requirements.

9.1.6 The Contractor must incorporate EHS warnings and instructions in direct relation of the EHS risks presented in the contents into documentation.

## 9.2 Environmental Management System

9.2.1 The Contractor must have a management system in place to control environmental, health and safety impacts resulting from their activities, products and services.

9.2.2 The Contractor must have a formalized set of procedures and control measures in place to achieve conformance with the requirements of this Work, while ensuring environmental, health and safety protection and pollution prevention.

9.2.3 The Contractor must also make reasonable effort to monitor that all subcontractors are in compliance with applicable environmental laws and regulations.

## 9.3 EHS Packaging Labels and SDS

9.3.1 The Contractor must label and ship goods falling within the Hazardous Products Act, R.S.C. 1985, C. H-3 and regulation(s) there under, IAW the said Act and regulation(s).

9.3.1.1 The Contractor must ship goods accompanied by the required Safety Data Sheet(s) (SDS), completed in both English and Canadian French.

9.3.1.2 The Contractor must clearly identify the contents of the hazardous material with labels, and the SDS must explain what those hazards are.

# 10.0 TECHNICAL REQUIREMENTS

## 10.1 Overview

10.1.1 The Contractor must comply with all specified requirements for each component of the WTS, stated in:

10.1.1.1 A1.0 APPENDIX: WTS TECHNICAL SPECIFICATION

| A1.0 APPENDIX: WTS TECHNICAL SPECIFICATION | VERIFICATION METHOD | VERIFICATION PHASE |
|---|---|---|
| A1.1 **System Requirements** | | |
| A1.1.1 **General** | | |
| A1.1.1.1 The WTS must be a self-contained system comprising all the components and tools necessary for the transport, setup, operation and teardown of the system. | | |
| A1.1.1.2 The WTS must allow all CAF personnel that fall within the 5th to 95th percentile range outlined in the DCIEM Report 98-CR-15 for CAF personnel, to carry out all functions and duties related to operating and maintaining the WTS. | | |
| A1.1.1.3 The WTS must consist of the following major components and is further described in detail under section A1.2: | | |
| A1.1.1.3.1 Water Treatment Unit (WTU); | | |
| A1.1.1.3.2 Miscellaneous Equipment Unit (MEU); | | |
| A1.1.1.3.3 Water Storage Units (WSU); | | |
| A1.1.1.3.4 Arctic Sustainment Unit (ASU); and | | |
| A1.1.1.3.5 Trailer. | | |
| A1.1.1.4 The WTS is expected to have an in-service duration of 20 years. | | |
| A1.1.2 **Certification** | | |
| A1.1.2.1 The WTS electrical components and equipment must be certified Canadian Standards Association (CSA) or equivalent national/international standard. | CERTIFICATION | FIRST PRODUCTION ARTICLE |

| | | CERTIFICATION | FIRST PRODUCTION ARTICLE |
|---|---|---|---|
| A1.1.2.2 | The WTS plumbing components, materials and equipment that comes in contact with potable water must comply with American National Standards Institute / National Sanitation Foundation (ANSI/NSF) Standard 61. | | |
| A1.1.3 | **Modes of Employment** | | |
| A1.1.3.1 | **Primary** | | |
| A1.1.3.1.1 | The WTU and MEU are mounted on the Trailer for both transport and operation. Operation is defined as producing potable water. | | |
| A1.1.3.2 | **Secondary** | | |
| A1.1.3.2.1 | The WTU and MEU are transported by means other than the Trailer. The WTU and MEU are off-loaded from its transport and operated while on the ground. Operation is defined as producing potable water. | | |
| A1.1.3.3 | **Cold Weather Operations** | | |
| A1.1.3.3.1 | For cold weather operations, units may require some or all of the equipment found within the ASU. Units not equipped with an ASU will receive an ASU through the CAF supply system when needed. The ASU is intended for logistical storage and movement of the cold weather components. For operations, units will cross-load the cold weather components from the ASU into the MEU prior to deployment and will not physically deploy with the ASU Enclosure. | | |
| A1.1.3.4 | **Humanity/Domestic Operations** | | |
| A1.1.3.4.1 | For International Humanity or National Domestic operations where delivery and distribution of water to the local population is the predominant mission, the WSU may be used. | | |

| | | | |
|---|---|---|---|
| A1.1.4 | **Set up** | | |
| A1.1.4.1 | In its primary mode of employment, two operators must be able to set up the system within sixty (60) minutes after arrival at the selected water source. | DEMO | FIRST PRODUCTION ARTICLE |
| A1.1.4.2 | Where conditions warrant the use of the ASU with the WTS, two (2) operators must be able to set up the system within two (2) hours after arrival at the selected water source. | | |
| A1.1.4.3 | Set up is defined as the system fully ready to pump water from the raw water source into the WTU and does not include run-up time associated with flushing out filter systems prior to producing potable water. | | |
| A1.1.5 | **Operation** | DEMO | FIRST PRODUCTION ARTICLE |
| A1.1.5.1 | Once set up, the sustained operation of the system in its primary mode of employment must be achievable by one qualified operator. | | |
| A1.1.5.1.1 | Operation is defined as at least twenty (20) consecutive hours of water production and no more than four (4) hours of maintenance in a twenty-four (24) hour period. | | |
| A1.1.6 | **Teardown** | DEMO | FIRST PRODUCTION ARTICLE |
| A1.1.6.1 | In its primary mode of employment and the system producing potable water, two operators must be able to tear down and prepare the system for a road move, including attaching the trailer to its prime mover, across the climatic conditions outlined in A1.5.1, in sixty (60) minutes. | | |
| A1.1.7 | **Transportability** | | |
| A1.1.7.1 | **Road Transportability** | | |
| A1.1.7.1.1 | In its primary mode of employment, the prime movers of the system are the MSVS Standard Military Pattern (SMP) and the MSVS Militarized | | |

| | | | |
|---|---|---|---|
| | Commercial off the Shelf (MilCOTS) trucks (refer to references C-32-F42-000/MA-000 and C-30-K86-000/TE-000). | | |
| A1.1.7.1.2 | The WTU, MEU, WSU and ASU must be transportable by the MSVS Pallet Load System (PLS) Trailer (8'x20') and commercial low-bed Trailers using the PLS or mounted on the flat deck secured in place by ISO twist locks. | ANALYSIS | FIRST PRODUCTION ARTICLE |
| A1.1.7.1.3 | In its primary mode of employment, the system must have emergency towing and recovery facilities that comply with STANAG 4478 ED 1. | INSPECTION | FIRST PRODUCTION ARTICLE |
| A1.1.7.1.4 | In its primary mode of employment, track width must not exceed or be less than the track width limits of the two (2) prime movers. | INSPECTION | FIRST PRODUCTION ARTICLE |
| A1.1.7.1.5 | The WTS tongue weight load must be between 10% and 15% of the GTW, regardless of the percentage laden. | ANALYSIS | FIRST PRODUCTION ARTICLE |
| A1.1.7.2 | **Rail Transportability** | ANALYSIS | FIRST PRODUCTION ARTICLE |
| A1.1.7.2.1 | In its primary mode of employment, the system must be transportable by rail in Canada as specified in MIL-STD-1366E, Chapter 5.2. | | |
| A1.1.7.3 | **Sea Transportability** | | |
| A1.1.7.3.1 | In its primary mode of employment, the system must be transportable both above deck and below deck on military and commercial cargo vessels, including Roll-on Roll-off (RORO) and Lift-on Lift-off (LOLO). | | |
| A1.1.7.4 | **Air Transportability** | ANALYSIS | FIRST PRODUCTION ARTICLE |
| A1.1.7.4.1 | In its primary mode of employment, the system must be transportable in the CC-177 Globemaster III and the CC-130 Hercules transport aircraft as specified in C-12-130-000/CL-001. | | |

| | | | |
|---|---|---|---|
| A1.1.7.4.2 | The WTU, MEU, WSU and ASU must each be capable of being transported under CH-147 Chinook helicopter on a sling. | | |
| A1.1.8 | **Tie-Down and Lifting Points** | INSPECTION | FIRST PRODUCTION ARTICLE |
| A1.1.8.1 | In its primary mode of employment, the system must have tie-down points as per STANAG 4062 to permit securing for all means of transportation in A1.1.7. | | |
| A1.1.8.2 | In its primary mode of employment, the system must have lifting points to permit lifting and loading for all means of transportation in A1.1.7. Lifting points must be installed on the same horizontal plane and allow for a balanced (horizontal) load to facilitate lifting. | | |
| A1.1.8.3 | Stencil or decal markings must be applied at each lifting and tie-down point, indicating their intended use and any limitations. | | |
| A1.1.8.4 | The Trailer must meet the Interface Standards for Lifting and Tie-down Provisions IAW MIL-STD-209 (Revision K). | | |
| A1.1.8.5 | The Trailer must be equipped with permanent, integrally attached tie-downs so that the Trailer with full payload of WTU and MEU mounted, can be tied down for transport. | | |
| A1.2 | **WTS Components Requirements** | | |
| A1.2.1 | **Water Treatment Unit (WTU)** | | |
| A1.2.1.1 | The WTU is contained in a weatherproof and insulated enclosure as described in A1.2.1.3. | INSPECTION | FIRST PRODUCTION ARTICLE |
| A1.2.1.2 | The WTU houses the Water Filtration and Treatment System, the Electrical System, the Automated Control System and an Internal Heater. | | |
| A1.2.1.3 | Enclosure | | |

| | | | |
|---|---|---|---|
| A1.2.1.3.1 | The weatherproof and insulated Enclosure is based on a QUADCON ISO container. The common QUADCON ISO container requirements are outlined in A.1.3.5. | INSPECTION | FIRST PRODUCTION ARTICLE |
| A1.2.1.3.2 | The Enclosure must have an integral externally fixed detachable ladder to enable access to the roof of the Enclosure. | INSPECTION | FIRST PRODUCTION ARTICLE |
| A1.2.1.3.3 | The Enclosure must contain one (1) Fire Extinguisher NSN 4210-21-908-1048 (or equivalent), which is mounted on the wall using mounting brackets, NSN 4210-21-886-3387 (or equivalent), in the interior of the Enclosure near one of the main access panels or doors. | INSPECTION | FIRST PRODUCTION ARTICLE |
| A1.2.1.3.4 | The Enclosure must contain two (2) external weatherproof 120 VAC duplex receptacles of the GFCI NEMA 5-20RA type with covers. | INSPECTION | FIRST PRODUCTION ARTICLE |
| A1.2.1.3.5 | The Enclosure must contain an easily accessible Holder for the WTS Operator Manual (see 8.3.1.1) and WTU Operator Quick Reference Card (see 8.3.1.2) which must be of adequate size to accept both documents and must: | INSPECTION | FIRST PRODUCTION ARTICLE |
| A1.2.1.3.5.1 | Be rigid; | | |
| A1.2.1.3.5.2 | Be transparent; | | |
| A1.2.1.3.5.3 | Have a partially-open bottom or drain holes so no water can accumulate; and | | |
| A1.2.1.3.5.4 | Be located on a flat vertical surface that is not a door or an access panel. | | |
| A1.2.1.3.6 | The Enclosure must contain an easily accessible Holder for the WTU Process and Flow Diagrams (see 8.3.1.12), which must be of adequate size to accept the Process and Flow Diagrams and must: | INSPECTION | FIRST PRODUCTION ARTICLE |
| A1.2.1.3.6.1 | Be rigid; | | |

| | | | |
|---|---|---|---|
| A1.2.1.3.6.2 | Be transparent; | | |
| A1.2.1.3.6.3 | Have a partially-open bottom or drain holes so no water can accumulate; | | |
| A1.2.1.3.6.4 | Be located on a flat vertical surface that is not a door or an access panel; | | |
| A1.2.1.3.7 | Access Panels and Doors | INSPECTION | FIRST PRODUCTION ARTICLE |
| A1.2.1.3.7.1 | The Enclosure must incorporate doors and access panels to allow the operation and maintenance of all systems housed in the WTU. | | |
| A1.2.1.3.7.2 | The doors and access panels must be: | | |
| A1.2.1.3.7.2.1 | Lockable; | | |
| A1.2.1.3.7.2.2 | Weathertight; | | |
| A1.2.1.3.7.2.3 | Have hold-open fixtures and TIR securing gadgets (i.e. provisions for padlocking and custom sealing, locking mechanisms, tamper-evident devices). | | |
| A1.2.1.3.8 | Lighting | INSPECTION | FIRST PRODUCTION ARTICLE |
| A1.2.1.3.8.1 | The Enclosure must have white interior LED lighting of 540 lux illuminance. | | |
| A1.2.1.3.8.2 | The Enclosure must have red blackout lighting for operations in a tactical military scenario. | | |
| A1.2.1.3.8.3 | Lighting must be controlled by a three-way switch which enables the operator to select off, white light or red blackout lighting. | | |
| A1.2.1.3.8.3.1 | The switching configuration must allow the user to select either lighting modes directly from the “OFF” position, to ensure that the operator does not have to switch through the white light mode to | | |

| | | | |
|---|---|---|---|
| | get to blackout mode, flashing the white LEDs in a tactical situation. | | |
| A1.2.1.4 | **Water Filtration and Treatment System** | | |
| A1.2.1.4.1 | **General** | | |
| A1.2.1.4.1.1 | The Water Filtration and Treatment System comprises the Plumbing, Clean in Place System, Pre-treatment Module, the Reverse Osmosis Module and the Chlorine Injection System. | | |
| A1.2.1.4.1.2 | The Water Filtration and Treatment System must operate in the following modes of operation: | | |
| A1.2.1.4.1.2.1.1 | Pre-treatment, Single Pass Reverse Osmosis and Chlorine Injection. | | |
| A1.2.1.4.1.2.1.2 | Pre-treatment, Double Pass Reverse Osmosis and Chlorine Injection. | | |
| A1.2.1.4.2 | **Plumbing** | CERTIFICATION | FIRST PRODUCTION ARTICLE |
| A1.2.1.4.2.1 | The WTS Plumbing must meet the National Plumbing Code (NPC) of Canada (see Reference NPC 2015). | | |
| A1.2.1.4.2.2 | Stainless steel type 904L or 316L must be used for pipes and bends for welding and for similar parts without crevices. | | |
| A1.2.1.4.2.3 | Where crevices occur such as at flange connections, in valves and pumps, stainless steel type 254 SMO or similar with greater than or equal to 3% Mo must be used. | | |
| A1.2.1.4.2.4 | Piping must be pickled and passivated in order to protect against chloride attack. | | |
| A1.2.1.4.2.5 | Backing gas must be used when welding to avoid the weld oxide film forming a base for crevice corrosion. | | |

| | | | |
|---|---|---|---|
| A1.2.1.4.2.6 | Flow velocity in the piping must be above 1.0 m/s in order to promote the forming and maintenance of a passive film. | | |
| A1.2.1.4.2.7 | The design must avoid having areas where water can pool and stagnate and thus risk contamination. | | |
| A1.2.1.4.2.8 | All pipes must be self-draining. | | |
| A1.2.1.4.3 | **Clean In Place System** | INSPECTION | FIRST PRODUCTION ARTICLE |
| A1.2.1.4.3.1 | The Clean in Place System enables the cleaning, sanitization and preservation of the Water Filtration and Treatment System by providing a means to circulate chemical cleaning solutions, including citric acid and chlorine, through the Water Filtration and Treatment System. | | |
| A1.2.1.4.3.2 | When chlorine is used as part of the Clean in Place process and the Reverse Osmosis Membranes being used are susceptible to chlorine, the Reverse Osmosis Module must be physically isolatable to prevent the chlorine from coming into contact with the Reverse Osmosis membranes. | | |
| A1.2.1.4.3.3 | A drain valve must be installed at the lowest point to allow complete drainage of the cleaning solution following the sanitization process. | | |
| A1.2.1.4.4 | **Pre-treatment Module** | | |
| A1.2.1.4.4.1 | General | | |
| A1.2.1.4.4.1.1 | The Pre-treatment Module comprises the Intake Strainer Assembly, Multi Stage Mechanical Filtration System, and De-Chlorination System. | | |

| | | | |
|---|---|---|---|
| A1.2.1.4.4.1.2 | The role of the Pre-treatment Module is to pre-treat source water in order to maximize the efficiency of the Reverse Osmosis Module and to maximize the life of the Reverse Osmosis membranes by minimizing fouling, scaling and Reverse Osmosis membrane degradation. | | |
| A1.2.1.4.4.2 | Intake Strainer Assembly | INSPECTION | FIRST PRODUCTION ARTICLE |
| A1.2.1.4.4.2.1 | The Intake Strainer Assembly consists of a quick-connect and disconnect intake strainer and a floatation buoy or collar. | | |
| A1.2.1.4.4.2.2 | The intake strainer must be 1000 micron nominal size filtration. | | |
| A1.2.1.4.4.2.3 | The Intake Strainer Assembly design must follow the Department of Fisheries and Oceans (DFO) Freshwater Intake End-of-Pipe Fish Screen Guideline (see the References, DFO / 5080). | | |
| A1.2.1.4.4.2.4 | The Intake Strainer Assembly will be stored and transported in the MEU. | | |
| A1.2.1.4.4.3 | Mechanical Filtration System | TEST | PWFTS |
| A1.2.1.4.4.3.1 | The Mechanical Filtration System must take feed water that has passed through the 1000 micron intake strainer and prepare the water for the Reverse Osmosis Module. | | |
| A1.2.1.4.4.3.2 | As fouling is expected to be one of the major challenges facing the system, a design approach that uses successive contaminant size exclusion must be employed to prevent fouling of downstream filters in the series. | | |
| A1.2.1.4.4.3.3 | All filtration technologies forming part of the Mechanical Filtration System must be self-cleaning through an automated back-pulsing or backwash capability that is initiated by a performance degradation. | | |

| | | | |
|---|---|---|---|
| A1.2.1.4.4.3.4 | The following types of filtration technologies will not be considered in the Mechanical Filtration System: | | |
| A1.2.1.4.4.3.4.1 | Sedimentation tanks, including chemical additives; | | |
| A1.2.1.4.4.3.4.2 | Disposable filters and cartridges; and | | |
| A1.2.1.4.4.3.4.3 | Flocculation | | |
| A1.2.1.4.4.3.5 | Physical Access | INSPECTION | FIRST PRODUCTION ARTICLE |
| A1.2.1.4.4.3.5.1 | The physical layout of the Mechanical Filtration System must allow unrestricted access to both the feed water and brine ends of each and every potential system being considered. This will allow for loading, unloading and troubleshooting of those elements. | | |
| A1.2.1.4.4.3.5.2 | Sample points must be incorporated to facilitate localizing and troubleshooting potential problems. | | |
| A1.2.1.4.4.4 | De-Chlorination System | | |
| A1.2.1.4.4.4.1 | The De-Chlorination System must reduce free chlorine in the source water down to the required concentration to prevent degradation of the Reverse Osmosis membranes from a water source with a chlorine level of up to and including 3 PPM. | CERTIFICATION | FIRST PRODUCTION ARTICLE |
| A1.2.1.4.4.4.2 | Should Reverse Osmosis membranes be used that are not susceptible to degradation from a water source with a chlorine level of 3 PPM, a De-Chlorination System is not necessary. | | |
| A1.2.1.4.4.4.3 | The De-Chlorination System must have an electronically controlled bypass with a manual backup when the system is not needed. | INSPECTION | FIRST PRODUCTION ARTICLE |
| A1.2.1.4.4.4.4 | The absence of chlorine must be automatically monitored downstream of the De-Chlorination System. | | |

| | | | |
|---|---|---|---|
| A1.2.1.4.4.4.4.1 | In the event that the level of chlorine exceeds the threshold of the level which would cause irreparable damage to the Reverse Osmosis membranes, the High-Pressure Pump must be automatically shut off. | | |
| A1.2.1.4.5 | **Reverse Osmosis Module** | | |
| A1.2.1.4.5.1 | The Reverse Osmosis (RO) Module must perform membrane water filtration process in the Ionic Range of the Filtration Spectrum between 0.0001 micron and 0.001 micron (Hyperfiltration). | CERTIFICATION | PWFTS |
| A1.2.1.4.5.2 | The RO pressure vessels must be corrosion proof and tested at 1.5 times the working pressure of the vessel. | | |
| A1.2.1.4.5.3 | The RO membranes must resist bacterial growth and reduce hydrolysis effects at pH extremes. | | |
| A1.2.1.4.5.4 | The RO Module must enable the Reverse Osmosis membranes to remain installed for seventy-two (72) hours when the WTS is not producing water without the need for removal and preservation of the Reverse Osmosis membranes. | INSPECTION | FIRST PRODUCTION ARTICLE |
| A1.2.1.4.5.5 | High Pressure Pump | | |
| A1.2.1.4.5.5.1 | The HPP must be made of Duplex 2205 and Super Duplex 2507 stainless steel and carbon reinforced PEEK for high corrosion resistance and strength. | | |
| A1.2.1.4.5.5.2 | The HPP must operate 8,000 hours before maintenance is required. | ANALYSIS | PWFTS |
| A1.2.1.4.5.5.3 | In the event of a loss of water pressure, the HPP must have an automated safety shut-off. | | |
| A1.2.1.4.5.5.4 | No oil lubrication must be required for the HPP. | | |
| A1.2.1.4.6 | **Chlorination Injection System** | | |

| | | | |
|---|---|---|---|
| A1.2.1.4.6.1 | Chlorine must be added to the permeate water to prevent microbiological contamination while permeate is stored and distributed after being processed through the Water Filtration and Treatment System. | CERTIFICATION | FIRST PRODUCTION ARTICLE |
| A1.2.1.4.6.2 | The Chlorination Injection System must be an automated system that maintains a constant injection rate into the permeate water at ≥ 0.5 mg/L and ≤ 2.0 mg/L. | | |
| A1.2.1.4.6.3 | The injection rate must be pre-selectable by the operator. | INSPECTION | FIRST PRODUCTION ARTICLE |
| A1.2.1.4.6.4 | A sample point must be located prior to the Chlorination Injection System so that a sample of the permeate water without chlorine can be taken to conduct a present-absence test for microbiological contaminants. | | |
| A1.2.1.5 | **Electrical System** | | |
| A1.2.1.5.1 | Electrical components of the WTU must have an Ingress Protection (IP) rating of IP56. | CERTIFICATION | FIRST PRODUCTION ARTICLE |
| A1.2.1.5.2 | **Generator Set** | | |
| A1.2.1.5.2.1 | The Generator Set must supply power to the WTS under the worst-case loading conditions (assumed to be cold weather operations where all cold weather components of the ASU are needed and purifying water with double pass reverse osmosis) with a 20% safety margin. | ANALYSIS | FIRST PRODUCTION ARTICLE |
| A1.2.1.5.2.2 | The Generator Set must use an Absorbed Glass Mat (AGM) maintenance-free battery. | INSPECTION | FIRST PRODUCTION ARTICLE |
| A1.2.1.5.2.3 | The Generator Set must function on commercial diesel fuel No.2 conforming to ASTM D975-15A as well as NATO F54 fuel. | TEST | FIRST PRODUCTION ARTICLE |

| | | | |
|---|---|---|---|
| A1.2.1.5.2.4 | A six (6) meter long exhaust hose must be provided to funnel the exhaust away from the WTU. The exhaust hose must be stored in the MEU when not in use. | INSPECTION | FIRST PRODUCTION ARTICLE |
| A1.2.1.5.2.5 | Internal Fuel Tank | | |
| A1.2.1.5.2.5.1 | The Internal Fuel Tank (IFT) must supply the fuel needed by the Generator Set to operate for eight (8) hours without refueling under worst-case loading conditions as outlined in A1.2.1.5.2.1. | TEST | FIRST PRODUCTION ARTICLE |
| A1.2.1.5.2.5.2 | The IFT must have a liquid level limit control device and spill containment. | INSPECTION | FIRST PRODUCTION ARTICLE |
| A1.2.1.5.2.5.3 | The IFT must be fully drainable by gravity. | | |
| A1.2.1.5.2.5.4 | The IFT must have a valve to remove water settled at the bottom of the fuel tank. | | |
| A1.2.1.5.2.5.5 | The operator must be able to add fuel to the fuel tank in both the primary and secondary mode of employment of the WTS. | | |
| A1.2.1.5.2.6 | Externally-mounted fuel fittings must be incorporated to enable connection to an external fuel source. | | |
| A1.2.1.5.2.7 | The Generator Set and IFT must be separated from the remainder of the WTU by a fire-resistant wall. | | |
| A1.2.1.5.2.8 | The floor under the Generator Set and IFT must capture spilled liquids and fuel and subsequently allow the controlled drainage of spilled liquids and fuel. | | |
| A1.2.1.5.3 | **Electrical Distribution Panel** | INSPECTION | FIRST PRODUCTION ARTICLE |
| A1.2.1.5.3.1 | The Electrical Distribution Panel (EDP) must monitor and control all power circuits. | | |

| | | | |
|---|---|---|---|
| A1.2.1.5.3.2 | Power circuits must be protected by automatic Ground Fault Circuit Interrupter(s) (GFCI). | | |
| A1.2.1.5.3.3 | The EDP must have Fault Indicators (visual and audible) to indicate malfunctions of the electrical system through the use of warning lights and alarms. | | |
| A1.2.1.5.3.4 | The EDP must have circuit breakers to allow isolation of equipment in the event of failure. | | |
| A1.2.1.5.3.5 | The EDP must have Battery voltage level indicator. | | |
| A1.2.1.5.3.6 | The EDP must have an emergency shut-off switch for the Generator Set. | | |
| A1.2.1.5.4 | **External Power Connection** | INSPECTION | FIRST PRODUCTION ARTICLE |
| A1.2.1.5.4.1 | The Electrical System must have the capability to connect to a North American external power grid and should have additional capability to connect to a European external power grid. | | |
| A1.2.1.5.4.2 | Fifteen (15) m long power cable assemblies must be provided for external power connection. | | |
| A1.2.1.5.4.3 | The power cable assemblies must have Hubbell connectors (4P5W, IP67): male on one end and female on the other end. | | |
| A1.2.1.5.4.4 | The electrical power transfer between the Generator Set and external power must be performed manually and automatically. | | |
| A1.2.1.5.4.5 | A 4-pole transfer switch (switched-neutral system) must be implemented. | | |
| A1.2.1.5.4.6 | Voltage selection must be performed manually and automatically. | | |
| A1.2.1.5.4.7 | The phase sequence protection or reverse phase monitoring with Fault Indicators (visual and audible) must be implemented. | | |

| | | | |
|---|---|---|---|
| A1.2.1.5.5 | **Grounding Rods** | INSPECTION | FIRST PRODUCTION ARTICLE |
| A1.2.1.5.5.1 | The Electrical System must be equipped with Grounding Rod(s) and the required cabling to connect them back to the Enclosure. | | |
| A1.2.1.5.5.2 | The Grounding Rod(s) configuration must be IAW MIL-STD-188-124B. | | |
| A1.2.1.6 | **Automated Control System** | DEMO | FIRST PRODUCTION ARTICLE |
| A1.2.1.6.1 | The WTU must have an Automated Control System to enable the production of potable water without continuous direct intervention by the operator once the WTS has been set up for operation. | | |
| A1.2.1.6.2 | The Automated Control System must have a digital interface that meets the following requirements: | DEMO | FIRST PRODUCTION ARTICLE |
| A1.2.1.6.2.1 | Must have a sun-readable screen; | | |
| A1.2.1.6.2.2 | Buttons or touch screen must be activated by an operator wearing CAF winter gloves; and | | |
| A1.2.1.6.2.3 | Language must be Canadian French and English, selectable by the operator. | | |
| A1.2.1.6.3 | The digital interface must allow the operator to: | | |
| A1.2.1.6.3.1 | Program the desired mode of operation as per A1.2.1.4.1.2 (single pass or double pass RO); | | |
| A1.2.1.6.3.2 | Set parameters for water production; | | |
| A1.2.1.6.3.3 | Monitor the status of the Water Filtration and Treatment System; and | | |
| A1.2.1.6.3.4 | Input changes to the parameters for water production. | | |

| | | | |
|---|---|---|---|
| A1.2.1.6.4 | The digital interface must display the following operational information throughout the Water Filtration and Treatment Systems: | | |
| A1.2.1.6.4.1 | Water temperatures; | | |
| A1.2.1.6.4.2 | Water TDS; | | |
| A1.2.1.6.4.3 | Water turbidity; | | |
| A1.2.1.6.4.4 | Water conductivity; | | |
| A1.2.1.6.4.5 | Chlorine levels; | | |
| A1.2.1.6.4.6 | Water pressures; | DEMO | FIRST PRODUCTION ARTICLE |
| A1.2.1.6.4.7 | Water flow rates. | | |
| A1.2.1.6.5 | The digital interface must provide specific warnings to the operator when abnormal operating conditions arise, including: | | |
| A1.2.1.6.5.1 | WTU malfunction; | | |
| A1.2.1.6.5.2 | Low intake pressure; | | |
| A1.2.1.6.5.3 | High TDS content in source water; | | |
| A1.2.1.6.5.4 | High TDS content in permeate water; | | |
| A1.2.1.6.5.5 | High free chlorine levels in source water (greater than 0.1 PPM); | | |
| A1.2.1.6.5.6 | Conductivity change; | | |
| A1.2.1.6.5.7 | Loss of system pressure; | | |
| A1.2.1.6.5.8 | Power supply malfunction; | | |

| | | | |
|---|---|---|---|
| A1.2.1.6.5.9 | Cleaning required; | | |
| A1.2.1.6.5.10 | Low fuel in the internal fuel tank; and | | |
| A1.2.1.6.5.11 | Any other parameters that are necessary to troubleshoot the system. | | |
| A1.2.1.6.6 | In the event that the digital interface is rendered inoperable, the WTU must be instrumented with analog backlit gauges that provide the operational information that the operator requires to produce potable water. | | |
| A1.2.1.6.7 | **Data Log** | DEMO | FIRST PRODUCTION ARTICLE |
| A1.2.1.6.7.1 | The Automated Control System must have an electronic Data Log that records data from the WTU. | | |
| A1.2.1.6.7.2 | The Data Log must have a USB connector or memory card reader to allow the download of data. | | |
| A1.2.1.6.7.3 | The downloaded data must be compatible with Microsoft Office Excel. | | |
| A1.2.1.6.8 | **Internal Heater** | TEST | FIRST PRODUCTION ARTICLE |
| A1.2.1.6.8.1 | The Internal Heater must enable the operation of the WTS in cold weather operations as per A1.5.2. | | |
| A1.2.2 | **Miscellaneous Equipment Unit (MEU)** | | |
| A1.2.2.1 | **Enclosure** | | |
| A1.2.2.1.1 | The MEU is contained in a weatherproof enclosure which is based on a QUADCON ISO container. The common QUADCON ISO container requirements are outlined in A.1.3.5. | INSPECTION | FIRST PRODUCTION ARTICLE |

| | | | |
|---|---|---|---|
| A1.2.2.1.2 | The Enclosure must have an integral external ladder to enable access to the roof of the Enclosure. | | |
| A1.2.2.1.3 | Electrical components of the MEU must have an Ingress Protection rating of IP56. | CERTIFICATION | FIRST PRODUCTION ARTICLE |
| A1.2.2.1.4 | The Enclosure must contain one (1) Fire Extinguisher, NSN 4210-21-908-1048 (or equivalent), which is mounted on wall mounting brackets, NSN 4210-21-886-3387(or equivalent), in the interior of the Enclosure near the main access door. | INSPECTION | FIRST PRODUCTION ARTICLE |
| A1.2.2.1.5 | The Enclosure must contain a First Aid Kit, NSN 4545-21-111-8439 (or equivalent), mounted in the interior of the MEU near the main access door. | | |
| A1.2.2.1.6 | The interior of the Enclosure must be fitted with storage bins, cabinets, shelving and reels required to store and transport the Ancillary Equipment outlined in A1.2.2.2, the Consumables outlined in A1.2.2.3 and the Cold Weather Ancillary Equipment outlined in A1.2.3.2. | INSPECTION | FIRST PRODUCTION ARTICLE |
| A1.2.2.1.6.1 | If the WTU has the capacity to store material in addition to housing the systems specified in A1.2.1.2, a portion of the Ancillary Equipment must be stored in the WTU to free up additional stowage space in the MEU. | | |
| A1.2.2.1.7 | The MEU Enclosure must have installed within it a MEU Stowage Map Poster Holder that must: | INSPECTION | FIRST PRODUCTION ARTICLE |
| A1.2.2.1.7.1 | Be rigid; | | |
| A1.2.2.1.7.2 | Be transparent; | | |
| A1.2.2.1.7.3 | Have a partially-open bottom or drain holes so no water can accumulate; | | |

| | | | |
|---|---|---|---|
| A1.2.2.1.7.4 | Be located on a flat vertical surface that is not a door or an access panel; and, | | |
| A1.2.2.1.7.5 | Allow the user to read the MEU Stowage Map Poster without removing it from its Holder. | | |
| A1.2.2.1.8 | Access Doors | INSPECTION | FIRST PRODUCTION ARTICLE |
| A1.2.2.1.8.1 | The Enclosure must incorporate access doors at one end to allow loading and unloading of Ancillary Equipment, Consumables and Cold Weather Ancillary Equipment. | | |
| A1.2.2.1.8.2 | The doors lockable, weathertight and have hold-open fixtures and TIR securing gadgets (i.e. provisions for padlocking and custom sealing, locking mechanisms, tamper-evident devices). | | |
| A1.2.2.1.9 | Lighting | INSPECTION | FIRST PRODUCTION ARTICLE |
| A1.2.2.1.9.1 | The Enclosure must have white interior LED lighting of 540 lux illuminance. | | |
| A1.2.2.1.9.2 | The Enclosure must have red blackout lighting for operations in a tactical military scenario. | | |
| A1.2.2.1.9.3 | Lighting must be controlled by a three-way switch which enables the operator to select off, white light or red blackout lighting. | | |
| A1.2.2.1.9.3.1 | The switching configuration must allow the user to select either lighting modes from the “OFF” position, to ensure that the operator does not have to switch through the white light mode to get to blackout mode, flashing the white LEDs in a tactical situation. | | |
| A1.2.2.1.9.4 | The electrical system for the lighting must allow for the use of both shore power and the WTU generator’s power. | | |

| | | | |
|---|---|---|---|
| A1.2.2.1.9.4.1 | The power input(s) must be on the outside of the MEU QUADCON with weatherproof connections. | | |
| A1.2.2.2 | **Ancillary Equipment** | INSPECTION | FIRST PRODUCTION ARTICLE |
| A1.2.2.2.1 | The ancillary equipment must include the following items: | | |
| A1.2.2.2.1.1 | Three (3) Feed Water Hoses of ten (10) m length (refer to A1.2.2.4); | | |
| A1.2.2.2.1.2 | Three (3) Concentrate Water Hoses of ten (10) m length (refer to para. A1.2.2.5); | | |
| A1.2.2.2.1.3 | Six (6) Potable Water Hoses of ten (10) m length (refer to para. A1.2.2.6); | | |
| A1.2.2.2.1.4 | Two (2) Water Distribution Nozzles (refer to para. A.1.2.2.7) | | |
| A1.2.2.2.1.5 | Feed Pump (refer to A1.2.2.8); | | |
| A1.2.2.2.1.6 | Reverse Osmosis Membrane Preservation Kit (refer to A1.2.2.9); | | |
| A1.2.2.2.1.7 | Distribution Pump (refer to A.1.2.2.10); | | |
| A1.2.2.2.1.8 | Three (3) Water Storage Tanks (refer to A1.2.2.11); | | |
| A1.2.2.2.1.9 | Three (3) Adaptors for the Potable Water Hoses to connect them to the Water Storage Tanks (refer to A1.2.2.11); | | |
| A1.2.2.2.1.10 | Three (3) Adaptors for the Potable Water Hoses to connect them with a top inlet fitment (refer to A1.2.4.3.2); | | |
| A1.2.2.2.1.11 | One (1) Spill Kit (refer to A1.2.2.12); | | |
| A1.2.2.2.1.12 | Intake Strainer Assembly including the spare intake strainers (refer to A1.2.1.4.4.2); | | |

| | | | |
|---|---|---|---|
| A1.2.2.2.1.13 | One (1) Exhaust Hose for Generator Set (refer to A1.2.1.5.1.4); | | |
| A1.2.2.2.1.14 | Two (2) Life Preserver Vest (refer to A.1.2.2.13); | | |
| A1.2.2.2.1.15 | Two (2) Wading Overalls (refer to A.1.2.2.14); | | |
| A1.2.2.2.1.16 | One (1) Water Testing Kit, Chemical Agent (refer to A.1.2.2.15); | | |
| A1.2.2.2.1.17 | One (1) Water Quality Analysis Kit (refer to A.1.2.2.16); and | | |
| A1.2.2.2.1.18 | One (1) Turbidity Verification Kit (refer to A.1.2.2.17). | | |
| A1.2.2.3 | **Consumables** | INSPECTION | FIRST PRODUCTION ARTICLE |
| A1.2.2.3.1 | The MEU must include the consumables necessary to sustain forty-five (45) days of consecutive operation at twenty (20) working hours plus four (4) hours a day of maintenance per day. | | |
| A1.2.2.4 | **Feed Water Hoses** | INSPECTION | FIRST PRODUCTION ARTICLE |
| A1.2.2.4.1 | The Feed Water Hoses must meet the following requirements: | | |
| A1.2.2.4.1.1 | Fitted with 316L camlock fittings (one male fitting on one end and one female fitting on the opposing end) and secured protective caps ; | | |
| A1.2.2.4.1.2 | The feed water hose from the inlet strainer to the feed pump must be reinforced with high-tensile steel wire helix embedded between layers of synthetic textile cords; | | |
| A1.2.2.4.1.2.1 | The feed water hose from the inlet strainer to the feed pump must have a minimum bend radius of 130 mm without kinking or restricting flow; | | |
| A1.2.2.4.1.3 | Covered with an abrasion and weather-resistant synthetic cover; | | |
| A1.2.2.4.1.4 | Resistant to Calcium Hypochlorite (NSN 6810-219-124-561), Cleaner MC1 – Citric Acid, Anhydrous (NSN 6810-20-010-6573), Cleaner | | |

| | | | |
|---|---|---|---|
| | MC4 – Decontaminating Agent (NSN 6850-20-010-6684) and Preservative MP4 – Sodium Bisulphite, Reagent (NSN 6810-20-010-7087) cleaning solutions; | | |
| A1.2.2.4.1.5 | Identified in large writing “Source Water” and “Eau d’Alimentation” and be colour-coded by a distinctive yellow colour. | | |
| A1.2.2.5 | **Concentrate Water Hoses** | INSPECTION | FIRST PRODUCTION ARTICLE |
| A1.2.2.5.1 | The Concentrate Water Hoses must meet the following requirements: | | |
| A1.2.2.5.1.1 | Fitted with 316L camlock fittings (one male fitting on one end and one female fitting on the opposite end) and secured protective caps; | | |
| A1.2.2.5.1.2 | Covered with an abrasion- and weather-resistant synthetic cover; | | |
| A1.2.2.5.1.3 | Resistant to sodium hydroxide and hydrogen peroxide cleaning solutions; | | |
| A1.2.2.5.1.4 | Identified in large writing “Concentrate Water” and “Eau de concentrat“, and be colour-coded by a distinctive red colour. | | |
| A1.2.2.6 | **Potable Water Hoses** | INSPECTION | FIRST PRODUCTION ARTICLE |
| A1.2.2.6.1 | The potable water hoses must meet the following requirements: | | |
| A1.2.2.6.1.1 | Fitted with 316L camlock fittings (one male fitting on one end and one female fitting on the opposing end) and secured protective caps; | | |
| A1.2.2.6.1.2 | Covered with an abrasion and weather resistant synthetic cover; | | |
| A1.2.2.6.1.3 | Resistant to sodium hydroxide and hydrogen peroxide cleaning solutions; | | |
| A1.2.2.6.1.4 | Identified in large writing with “Potable Water” and “Eau Potable”, and be colour-coded by a distinctive green colour. | | |

| | | | |
|---|---|---|---|
| A1.2.2.7 | **Water Distribution Nozzle** | INSPECTION | FIRST PRODUCTION ARTICLE |
| A1.2.2.7.1 | The Water Distribution Nozzle must provide a flow of 1,250 L/h. | | |
| A1.2.2.8 | **Feed Pump** | TEST | PWFTS |
| A1.2.2.8.1 | The Feed Pump is intended to pump source water from the raw water source to the WTU. | | |
| A1.2.2.8.2 | The Feed Pump must be man-portable with a maximum weight of 37 kg. | | |
| A1.2.2.8.3 | The Feed Pump must be self-priming. | | |
| A1.2.2.8.4 | The Feed Pump must have a suction lift of six (6) m from source water to the pump. | | |
| A1.2.2.8.5 | The Feed Pump must have a discharge lift of nine (9) m from the pump to the WTU when the three Feed Water Hoses are connected together. | | |
| A1.2.2.8.6 | The Feed Pump must operate on 120/208 V with thirty (30 m) power cord equipped with NEMA 5 power plug. | | |
| A1.2.2.8.7 | The Feed Pump must have camlock inlet and outlet couplers with secured protective caps. | | |
| A1.2.2.9 | **Reverse Osmosis Membrane Preservation Kit** | INSPECTION | FIRST PRODUCTION ARTICLE |
| A1.2.2.9.1 | The Reverse Osmosis Membrane Preservation Kit must be a vacuum sealing system including the membrane storage bags to store and protect reverse osmosis membranes from bacterial growth once they have been removed from the WTU. | | |
| A1.2.2.9.2 | The Reverse Osmosis Membrane Preservation Kit must include a rugged, air tight container to transport either individual or a group of vacuumed sealed reverse osmosis membranes. This container must be equipped with purge vents in the case of the container being transported in an unpressurized cargo aircraft. | | |

| | | | |
|---|---|---|---|
| A1.2.2.9.3 | If ceramic Reverse Osmosis Membranes are used, stowage containers must be provided to protect the membranes from breaking during all methods of transportation outlined in A1.1.6.1. | | |
| A1.2.2.10 | **Distribution Pump** | TEST | PWFTS |
| A1.2.2.10.1 | The Distribution Pump must be self-priming. | | |
| A1.2.2.10.2 | The Distribution Pump must be man-portable with a maximum weight of 37 kg. | | |
| A1.2.2.10.3 | The Distribution Pump must pump purified water to the water tanks when the six potable water hoses are connected together at an elevation difference of ten (10) m between the WTU and the water tanks (the water tanks being higher than the WTU). | | |
| A1.2.2.10.4 | The Distribution Pump must operate on 120/208 V with thirty (30) m power cord equipped with NEMA 5 power plug. | | |
| A1.2.2.10.5 | The Distribution Pump must be equipped with the camlock inlet and outlet couplers with secured protective caps. | | |
| A1.2.2.11 | **Water Storage Tanks** | INSPECTION | FIRST PRODUCTION ARTICLE |
| A1.2.2.11.1 | The storage tank must be certified American National Standards Institute / National Sanitation Foundation (ANSI/NSF) Standard 61, for containment of potable water. | | |
| A1.2.2.11.2 | The water storage tank must meet the following: | | |
| A1.2.2.11.2.1 | Contain 1500USG/5800 liters/1250 Imp Gal; | | |
| A1.2.2.11.2.2 | Be a flexible onion-type, collapsible, fabric container (see A1.2.2.11.2.12); | | |
| A1.2.2.11.2.3 | Contain a single flotation collar that requires no inflation; | | |

| | | | |
|---|---|---|---|
| A1.2.2.11.2.4 | Have form-fitted tops over the flotation collars that are secured onto those collars by zippers; | | |
| A1.2.2.11.2.5 | Be a self-supporting design which allows for quick set up and knock down (no assembly/disassembly); | | |
| A1.2.2.11.2.6 | Be able to be deployed anywhere with minimal site preparation in different environments (hot and cold); | | |
| A1.2.2.11.2.7 | Have a spill slope threshold of 12.0 degrees or more, and a rollover threshold of 14.0 degrees or more; | | |
| A1.2.2.11.2.8 | Have a carrying bag that holds one folded tank; | | |
| A1.2.2.11.2.9 | Have outside handles for quick setup and positioning; | | |
| A1.2.2.11.2.10 | Have inside handles to facilitate the inside cleaning; | | |
| A1.2.2.11.2.11 | Have two fill/drain ports with covers, 180 degrees apart, allowing for discharge and filling without changing supply hoses; | | |
| A1.2.2.11.2.12 | Be made of urethane-coated nylon MIL-SPEC-T53029C; | | |
| A1.2.2.11.2.13 | Have a finished coated weight not exceeding 1155 g/m$^2$; | | |
| A1.2.2.11.2.14 | Be Mil-spec tan in color; | | |
| A1.2.2.11.2.15 | Have a dry repair kit with each onion tank; | | |
| A1.2.2.11.2.16 | Have a Tearing Strength of 35 lbs, minimum as tested per Method 5134 of FED-STD-191A; | | |
| A1.2.2.11.2.17 | Have a Breaking Strength of 500 lbs/in, minimum as tested per Method 5102 of FED-STD-191A; | | |

| | | | |
|---|---|---|---|
| A1.2.2.11.2.18 | Have a Puncture resistance of 150 lbs, minimum as tested per Method 5120 of FED-STD-191A; | | |
| A1.2.2.11.2.19 | Have all flanges and fittings made of 316L stainless steel; | | |
| A1.2.2.11.2.20 | All seams be welded using radio frequency (RF) welding; | | |
| A1.2.2.12 | **Spill Kit** | INSPECTION | FIRST PRODUCTION ARTICLE |
| A1.2.2.12.1 | The Spill Kit must be NSN 4235-20-A0M-5363 (or equivalent). | | |
| A1.2.2.13 | **Life Preserver Vest** | INSPECTION | FIRST PRODUCTION ARTICLE |
| A1.2.2.13.1 | The Life Preserver Vest must be NSN 4220-20-000-0262 (or equivalent). | | |
| A1.2.2.14 | **Wading Overalls** | INSPECTION | FIRST PRODUCTION ARTICLE |
| A1.2.2.14.1 | The Wading Overalls must be NSN 8415-20-A0F-1690 (or equivalent). | | |
| A1.2.2.15 | **Water Testing Kit, Chemical Agent** | INSPECTION | FIRST PRODUCTION ARTICLE |
| A1.2.2.15.1 | The Water Testing Kit, Chemical Agent, must be NSN 6665-01-134-0885 (or equivalent). | | |
| A1.2.2.15.2 | The Water Testing Kit, Chemical Agent, dimensions are 25 cm × 16 cm × 7 cm. | | |
| A1.2.2.15.3 | The Water Testing Kit, Chemical Agent, weight is 1.4 kg. | | |
| A1.2.2.16 | **Water Quality Analysis Reconnaissance Kit** | INSPECTION | FIRST PRODUCTION ARTICLE |
| A1.2.2.16.1 | The Water Quality Analysis Reconnaissance Kit, must be NSN 6630-21-912-5298 (or equivalent). | | |

| | | | |
|---|---|---|---|
| A1.2.2.16.2 | The Water Quality Analysis Reconnaissance Kit dimensions are 62 cm × 50 cm × 22 cm. | | |
| A1.2.2.16.3 | The Water Quality Analysis Reconnaissance Kit weight is 12.7 kg. | | |
| A1.2.2.17 | **Turbidity Verification Kit** | INSPECTION | FIRST PRODUCTION ARTICLE |
| A1.2.2.17.1 | The Turbidity Verification Kit, Mettler Toledo InPro 8600, must be NSN 6630-20-010-3615 (or equivalent). | | |
| A1.2.2.17.2 | The Turbidity Verification Kit dimensions are 55 cm × 25 cm × 25 cm. | | |
| A1.2.2.17.3 | The Turbidity Verification Kit weight is 4.8 kg. | | |
| A1.2.3 | **Arctic Sustainment Unit (ASU)** | | |
| A1.2.3.1 | **Enclosure** | | |
| A1.2.3.1.1 | The ASU is contained in a weatherproof enclosure which is based on a QUADCON ISO container. The common QUADCON ISO container requirements are outlined in A.1.3.5. | INSPECTION | FIRST PRODUCTION ARTICLE |
| A1.2.3.1.2 | The interior of the Enclosure must be fitted with storage bins, cabinets, tablets and reels required to store and transport the Cold Weather Ancillary Equipment outlined in A1.2.3.2. | INSPECTION | FIRST PRODUCTION ARTICLE |
| A1.2.3.1.3 | The ASU Enclosure must have installed within it an ASU Stowage Map Poster Holder that must: | INSPECTION | FIRST PRODUCTION ARTICLE |
| A1.2.3.1.3.1 | Be rigid; | | |
| A1.2.3.1.3.2 | Be transparent; | | |
| A1.2.3.1.3.3 | Have a partially-open bottom or drain holes so no water can accumulate; | | |

| | | | |
|---|---|---|---|
| A1.2.3.1.3.4 | Be located on a flat vertical surface that is not a door or an access panel; and, | | |
| A1.2.3.1.3.5 | Allow the user to read the ASU Stowage Map Poster without removing it from its Holder. | | |
| A1.2.3.2 | **Cold Weather Ancillary Equipment** | INSPECTION | FIRST PRODUCTION ARTICLE |
| A1.2.3.2.1 | The Cold Weather Ancillary Equipment must include the following items: | | |
| A1.2.3.2.1.1 | Three (3) Electrically-Heated Feed Water Hoses of ten (10) m length, flexible (refer to A1.2.3.3); | | |
| A1.2.3.2.1.2 | Three (3) Electrically-Heated Concentrate Hoses of ten (10) m length (refer to A1.2.3.4); | | |
| A1.2.3.2.1.3 | Six (6) Electrically-Heated Potable Water Hoses of ten (10) m length (refer to A1.2.3.5); | | |
| A1.2.3.2.1.4 | One (1) Feed Water Pump Electrically-Heated Blanket (refer to A1.2.3.6); | | |
| A1.2.3.2.1.5 | One (1) Distribution Pump Electrically-Heated Blanket (refer to A1.2.3.7); | | |
| A1.2.3.2.1.6 | One (1) Cold Weather Shelter (refer to A1.2.3.8); and | | |
| A1.2.3.2.1.7 | One (1) Heater (refer to A1.2.3.8.5). | | |
| A1.2.3.2.2 | All Electrically-Heated Hoses and Electrically-Heated Blankets must have a daisy-chain capability in order to be connected electrically to each other. | | |
| A1.2.3.3 | **Electrically-Heated Feed Water Hoses** | INSPECTION | FIRST PRODUCTION ARTICLE |
| A1.2.3.3.1 | The Electrically-Heated Feed Water Hoses must meet the following requirements: | | |

| | | | |
|---|---|---|---|
| A1.2.3.3.1.1 | Fitted with 316L camlock fittings (one male fitting on one end and one female fitting on the opposing end) and secured protective caps; | | |
| A1.2.3.3.1.2 | Covered with an abrasion- and weather-resistant synthetic cover; | | |
| A1.2.3.3.1.3 | Resistant to sodium hydroxide and hydrogen peroxide cleaning solutions; | | |
| A1.2.3.3.1.4 | Must remain flexible and be capable of being fully-coiled, fully-uncoiled, straightened, and maneuvered without damage over the full-range of climatic conditions and operating conditions outlined in A1.5.1.1; and | | |
| A1.2.3.3.1.5 | Identified in large writing “Source Water” and “Eau d’Alimentation”, and be colour-coded by a distinctive yellow colour. | | |
| A1.2.3.4 | **Electrically Heated Concentrate Water Hoses** | INSPECTION | FIRST PRODUCTION ARTICLE |
| A1.2.3.4.1 | The Electrically Heated Concentrate Water Hoses must meet the following requirements: | | |
| A1.2.3.4.1.1 | Fitted with 316L camlock fittings (one male fitting on one end and one female fitting on the opposing end) and secured protective caps; | | |
| A1.2.3.4.1.2 | Covered with an abrasion and weather resistant synthetic cover; | | |
| A1.2.3.4.1.3 | Resistant to sodium hydroxide and hydrogen peroxide cleaning solutions; | | |
| A1.2.3.4.1.4 | Must remain flexible and be capable of being fully-coiled, fully-uncoiled, straightened, and maneuvered without damage over the full-range of climatic conditions and operating conditions outlined in A1.5.1.1; and | | |
| A1.2.3.4.1.5 | Identified in large writing “Concentrate Water” and “Eau de Concentrat” and be colour-coded red. | | |

| | | | |
|---|---|---|---|
| A1.2.3.5 | **Electrically-Heated Potable Water Hoses** | INSPECTION | FIRST PRODUCTION ARTICLE |
| A1.2.3.5.1 | The Electrically-Heated Potable Water Hoses must meet the following requirements: | | |
| A1.2.3.5.1.1 | Fitted with 316L camlock fittings (one male fitting on one end and one female fitting on the opposing end) and secured protective caps; | | |
| A1.2.3.5.1.2 | Covered with an abrasion and weather resistant synthetic cover; | | |
| A1.2.3.5.1.3 | Resistant to sodium hydroxide and hydrogen peroxide cleaning solutions; | | |
| A1.2.3.5.1.4 | Must remain flexible and be capable of being fully-coiled, fully-uncoiled, straightened, and maneuvered without damage over the full-range of climatic conditions and operating conditions outlined in A1.5.1.1; and | | |
| A1.2.3.5.1.5 | Identified in large writing “Potable Water” and “Eau Potable” and be colour-coded by a distinctive green colour. | | |
| A1.2.3.6 | **Feed Water Pump Electrically-Heated Blanket** | TEST | FIRST PRODUCTION ARTICLE |
| A1.2.3.6.1 | The Feed Water Pump Electrically Heated Blanket must cover the Feed Water Pump (refer to A1.2.2.8) to prevent freezing of water. | | |
| A1.2.3.7 | **Distribution Pump Electrically Heated Blanket** | TEST | FIRST PRODUCTION ARTICLE |
| A1.2.3.7.1 | The Distribution Pump Electrically Heated Blanket must cover the Distribution Pump (refer to A1.2.2.10) to prevent freezing of water. | | |
| A1.2.3.8 | **Cold Weather Shelter** | | |
| A1.2.3.8.1 | The Cold Weather Shelter (CWS) must accommodate three (3) Water Storage Tanks (refer to A1.2.2.11.1) and provide enough room for the operator to have 360-degree access to each of the Water Storage Tanks. | DEMO | FIRST PRODUCTION ARTICLE |

| | | | |
|---|---|---|---|
| A1.2.3.8.2 | The CWS must resist 40 km/h winds from any direction and it must be secured to the ground using an additional restraint system (if required) to resist wind lift up to 80 km/h and a snow load ≥ 100 kg/m$^2$. | ANALYSIS | FIRST PRODUCTION ARTICLE |
| A1.2.3.8.3 | The CWS must have two (2) entry/exit points that all have soft doors. | INSPECTION | FIRST PRODUCTION ARTICLE |
| A1.2.3.8.4 | The CWS must provide clear flexible windows and exterior opaque covering arrangements that when lifted/rolled-up permit fresh air to flow through the shelter. | | |
| A1.2.3.8.5 | The CWS must be equipped with a heater that is capable of maintaining an internal ambient temperature of a minimum of +5ºC while operating in extreme climatic conditions outlined in A1.5.1.1. | ANALYSIS | FIRST PRODUCTION ARTICLE |
| A1.2.3.8.6 | The CWS must have weather and insect-tight duct inlets/outlets for heating and cooling equipment. | INSPECTION | FIRST PRODUCTION ARTICLE |
| A1.2.3.8.7 | The CWS must have interior LED lighting of 540 lux illuminance. | | |
| A1.2.3.8.8 | The CWS must prevent any visible light from emitting out of the shelter, including when personnel enter/exit the Shelter. | DEMO | FIRST PRODUCTION ARTICLE |
| A1.2.3.8.9 | The Cold Weather Shelter's fabric must conform to the following mandatory requirements: | INSPECTION | FIRST PRODUCTION ARTICLE |
| A1.2.3.8.9.1 | The external fabric colour must be colour #34094 (flat green) IAW SAE AMS-STD-595. | | |
| A1.2.3.8.9.2 | The internal fabric colour must be white; | | |
| A1.2.3.8.9.3 | The fabric must prevent the ingress of moisture via driving rain or melting snow; | | |
| A1.2.3.8.9.4 | The fabric must be designed to be easily hung to dry after it has been exposed to a wet environment; and | | |

| | | | |
|---|---|---|---|
| A1.2.3.8.9.5 | The fabric must be field repairable, fire-retardant, rot and mildew resistant, and must have minimal performance degradation when exposed to petroleum, oil or lubricants (POL), or when properly stored for extended periods. | CERTIFICATION | FIRST PRODUCTION ARTICLE |
| A1.2.4 | **Water Storage Unit (WSU)** | | |
| A1.2.4.1 | **Enclosure** | INSPECTION | FIRST PRODUCTION ARTICLE |
| A1.2.4.1.1 | The WSU is contained in a weatherproof enclosure which is based on a QUADCON ISO container. The common QUADCON ISO container requirements are outlined in A1.3.4. | | |
| A1.2.4.1.2 | The interior of the Enclosure must be fitted with a method to secure the Water Storage Ancillary Equipment outlined in A1.2.4.2 to prevent damage to this equipment during transportation or handling of the QUADCON ISO container. | | |
| A1.2.4.1.3 | The WSU Enclosure must have installed within it a WSU Stowage Map Poster Holder that must: | INSPECTION | FIRST PRODUCTION ARTICLE |
| A1.2.4.1.3.1 | Be rigid; | | |
| A1.2.4.1.3.2 | Be transparent; | | |
| A1.2.4.1.3.3 | Have a partially-open bottom or drain holes so no water can accumulate; | | |
| A1.2.4.1.3.4 | Be located on a flat vertical surface that is not a door or an access panel; and, | | |
| A1.2.4.1.3.5 | Allow the user to read the WSU Stowage Map Poster without removing it from its Holder. | | |
| A1.2.4.2 | **Water Storage Ancillary Equipment** | | |

| | | | |
|---|---|---|---|
| A1.2.4.2.1 | The Water Storage Ancillary Equipment must consist of the following items: | INSPECTION | FIRST PRODUCTION ARTICLE |
| A1.2.4.2.1.1 | Twenty (20) collapsible Intermediate Bulk Containers (IBC) as described in A1.2.4.2.2; | | |
| A1.2.4.2.1.2 | Two hundred (200) IBC Liners as described in A1.2.4.2.3; | | |
| A1.2.4.2.1.3 | Four (4) IBC Thermal Blankets as described in A1.2.4.2.4; | | |
| A1.2.4.2.1.4 | Ten (10) Single Faucets as described in A1.2.4.2.5; | | |
| A1.2.4.2.1.5 | Eight (8) Triple Faucets as described in A1.2.4.2.6; | | |
| A1.2.4.2.1.6 | Eight (8) Large Faucets as described in A1.2.4.2.7; and | | |
| A1.2.4.2.1.7 | Tools required to setup and maintain the WSU IAW the Operator Maintenance Concept, ANNEX A paragraph 8.1.2.1 (page 23). | | |
| A1.2.4.2.2 | Intermediate Bulk Containers | | |
| A1.2.4.2.2.1 | The Intermediate Bulk Containers (IBCs) must: | | |
| A1.2.4.2.2.1.1 | Meet the applicable requirements described in CAN/CGSB-43.146-2016 (Part 1); | | |
| A1.2.4.2.2.1.2 | Store and transport 1000 L of potable water with fit-form IBC Liners that are described in A1.2.4.2.3; | | |
| A1.2.4.2.2.1.3 | Have the same footprint and include contours which allow for safe and easy stacking of one IBC directly on top of another when folded for storage/transportation; | | |
| A1.2.4.2.2.1.4 | Be individually erectable and collapsible by one operator; | | |

| | | | |
|---|---|---|---|
| A1.2.4.2.2.1.5 | Have a means of rigidly holding in place the top inlet fitment and bottom outlet fitment of the IBC Liner which is described in A1.2.4.3.5; | | |
| A1.2.4.2.2.1.5.1 | When rigidly in place, an operator must be able to fill the IBC Liner through the top inlet fitment and drain through the bottom outlet fitment; | | |
| A1.2.4.2.2.1.6 | Have a waterproof identification pocket and transparent window with a minimum size of 153 mm (6”) wide x 100 mm (4”) high that is located on the same side as the bottom outlet fitment; | | |
| A1.2.4.2.2.1.7 | Have four-way forklift entry for ease of handling; | | |
| A1.2.4.2.2.1.8 | Have two handles per side properly spaced to allow for lifting by hand; | | |
| A1.2.4.2.2.1.9 | Weigh no more than one hundred (100) kg; | | |
| A1.2.4.2.2.1.10 | Be matte black or matte grey in color. | | |
| A1.2.4.2.3 | **Intermediate Bulk Container Liners** | | |
| A1.2.4.2.3.1 | The IBC Liner must: | | |
| A1.2.4.2.3.1.1 | Be certified American National Standards Institute / National Sanitation Foundation (ANSI/NSF) Standard 61. | CERTIFICATION | FIRST PRODUCTION ARTICLE |
| A1.2.4.2.3.1.2 | Preserve stored potable water for no less than 30 days. | | |
| A1.2.4.2.3.1.3 | Protect the stored potable water from contamination including debris, dust, mold, fungus and insects. | | |
| A1.2.4.2.3.1.4 | Have a top inlet fitment with a cap and a bottom outlet fitment with a cap; | | |

| | | | |
|---|---|---|---|
| A1.2.4.2.3.1.4.1 | The top inlet fitment and bottom outlet fitment must be male threaded; | | |
| A1.2.4.2.3.1.5 | Be resistant to abrasion, tearing, ripping and piercing. | | |
| A1.2.4.2.4 | **IBC Thermal Blanket** | | |
| A1.2.4.2.4.1 | The IBC Thermal Blanket must: | | |
| A1.2.4.2.4.1.1 | Cover the IBC/IBC Liner on all sides less the bottom while allowing access to the top inlet fitment, the bottom outlet fitment, carrying handles and four-way forklift lifting mechanism without compromising the insulation; | | |
| A1.2.4.2.4.1.2 | Protect the potable water inside the IBC/IBC Liner from rapid heating or cooling due to ambient temperature changes; | | |
| A1.2.4.2.4.1.3 | Weigh less than 15 kg; | | |
| A1.2.4.2.4.1.4 | Be durable and easy to clean; and | | |
| A1.2.4.2.4.1.5 | Be black or grey in color. | | |
| A1.2.4.2.5 | **Single Faucet** | | |
| A1.2.4.2.5.1.1 | The Single Faucet must connect directly to the bottom outlet fitment of the IBC Liner. | | |
| A1.2.4.2.5.1.2 | Be certified American National Standards Institute / National Sanitation Foundation (ANSI/NSF) Standard 61. | CERTIFICATION | FIRST PRODUCTION ARTICLE |
| A1.2.4.2.5.1.3 | The Single Faucet must enable the filling of a single 1.5 L water bottle in under ten (10) seconds. | DEMO | FIRST PRODUCTION ARTICLE |
| A1.2.4.2.6 | **Triple Faucet** | | |

| | | | |
|---|---|---|---|
| A1.2.4.2.6.1 | The Triple Faucet must connect directly to the bottom outlet fitment of the IBC Liner. | | |
| A1.2.4.2.6.2 | Be certified American National Standards Institute / National Sanitation Foundation (ANSI/NSF) Standard 61. | CERTIFICATION | FIRST PRODUCTION ARTICLE |
| A1.2.4.2.6.3 | The Triple Faucet must enable the simultaneous filling of three 1.5 L water bottles in under ten (10) seconds. | DEMO | FIRST PRODUCTION ARTICLE |
| A1.2.4.2.7 | Large Faucet | | |
| A1.2.4.2.7.1 | The Large Faucet must connect directly to the bottom outlet fitment of the IBC Liner. | | |
| A1.2.4.2.7.2 | Be certified American National Standards Institute / National Sanitation Foundation (ANSI/NSF) Standard 61. | CERTIFICATION | FIRST PRODUCTION ARTICLE |
| A1.2.4.2.7.3 | The Large Faucet must enable the filling of a 20 L jerry can (water jug) in under thirty (30) seconds. | DEMO | FIRST PRODUCTION ARTICLE |
| A1.2.5 | **Trailer** | | |
| A1.2.5.1 | **General** | | |
| A1.2.5.1.1 | For the Trailer to be admissible for importation into Canada, the manufacturer must be registered as a commercial importer with Transport Canada (TC). The application package is available upon request from Transport Canada. | CERTIFICATION | FIRST PRODUCTION ARTICLE |
| A1.2.5.1.2 | The Trailer must meet all applicable Motor Vehicle Safety Regulations at the time of its manufacture. | | |
| A1.2.5.1.3 | The expected average annual usage of the Trailer is 2000 km. | | |

| | | | |
|---|---|---|---|
| A1.2.5.2 | **ISO Twist Locks** | DEMO | FIRST PRODUCTION ARTICLE |
| A1.2.5.2.1 | The Trailer must be provided with eight (8) ISO twist locks as per ISO 668 to secure the WTU and MEU. | | |
| A1.2.5.2.2 | The ISO twist locks must come with guides to ensure loads settle properly over the twist locks to allow easy locking. | | |
| A1.2.5.3 | **Load Criteria** | DEMO | FIRST PRODUCTION ARTICLE |
| A1.2.5.3.1 | The WTU and MEU must be loadable and off-loadable from the Trailer on uneven ground having a side slope / longitudinal slope of 5° and at an approach angle of 5°. | | |
| A1.2.5.4 | **Chassis** | | |
| A1.2.5.4.1 | **General** | INSPECTION | FIRST PRODUCTION ARTICLE |
| | | | |
| A1.2.5.4.1.1 | The Trailer Chassis must be a tandem-axle design. | | |
| A1.2.5.4.1.2 | The Trailer Chassis must be equipped with a Rear Impact Guard that is retractable or foldable, IAW Canadian Motor Vehicle Safety Standards (CMVSS) 223. | | |
| A1.2.5.4.1.3 | The Trailer must have an adjustable Rear Support Leg in order to stabilize the Trailer when it is detached from either of the two (2) prime movers. | | |
| A1.2.5.4.1.4 | The Rear Support Leg must fold or retract out of the way in a manner that will not affect any function of the Trailer. | | |
| A1.2.5.4.1.5 | The Trailer Chassis must have recessed or bush-guarded protected lights, reflectors and related components IAW MIL-STD-1179E. | | |

| | | | |
|---|---|---|---|
| A1.2.5.4.1.6 | The Trailer Chassis must have a mounting point for an anti-static strap NSN 5920-00-636-3231 (or equivalent). | | |
| A1.2.5.4.2 | **Suspension** | TEST | FIRST PRODUCTION ARTICLE |
| A1.2.5.4.2.1 | The Trailer chassis suspension system, mounts and frame must function in a manner so as to ensure that all components of the WTS remain free from damage due to shock and vibration and while meeting the Transport Mission Profile outlined in Para 6.2.3.8.1. | | |
| A1.2.5.4.3 | **Brakes** | | |
| A1.2.5.4.3.1 | The Trailer Chassis must be provided with full air-actuated service brakes IAW CMVSS 121. | INSPECTION | FIRST PRODUCTION ARTICLE |
| A1.2.5.4.3.2 | The front of the Trailer Chassis must be equipped with air hoses, connectors and couplings and conform to STANAG 2604 ED.3, as follows: | | |
| A1.2.5.4.3.2.1 | Position of connectors; per Paragraph 4, Table 1, and Figure 1. | | |
| A1.2.5.4.3.2.2 | Nomenclature for Gladhands connectors and brake lines must be done IAW SAE J318: "Service" and "Emergency". | | |
| A1.2.5.4.3.2.3 | Identification of connector colour markings must be done IAW SAE J318: | | |
| A1.2.5.4.3.2.4 | Service Gladhands Braking Lines = Blue, and | | |
| A1.2.5.4.3.2.5 | Emergency Gladhands Braking Lines = Red. | | |
| A1.2.5.4.3.3 | The Trailer Chassis must be equipped with parking brakes which must control and hold motionless the fully-laden WTS, when facing in either direction up or down a hard surfaced slope of no less than 20% grade IAW SAE J1452. | DEMO | FIRST PRODUCTION ARTICLE |

| | | | |
|---|---|---|---|
| A1.2.5.4.3.4 | The Trailer Chassis air brake system must be provided with valves, drains or other methods of expelling moisture from all air reservoirs and lines. | INSPECTION | FIRST PRODUCTION ARTICLE |
| A1.2.5.4.4 | **Wheels and Tires** | | |
| A1.2.5.4.4.1 | The Trailer Chassis must have tires that are the same as the two (2) prime movers, which are 395/85R20 tires. | INSPECTION | FIRST PRODUCTION ARTICLE |
| A1.2.5.4.4.2 | The Trailer Chassis must have one (1) full size spare tire and wheel assembly. | | |
| A1.2.5.4.4.3 | The Trailer Chassis must be provided with 4 suitably sized wheel chocks. | | |
| A1.2.5.4.4.4 | The Trailer Chassis must have a spare wheel carrier assembly suitable for stowage and deployment of the spare tire and wheel assembly. | | |
| A1.2.5.4.4.5 | The wheel carrier, spare tire and wheel assembly must not impede or hamper any function of the WTS. | | |
| A1.2.5.4.4.6 | The Trailer Chassis tire and wheel assembly must be changed, including the removal and remounting of the tire and wheel assembly in the carrier, by two (2) soldiers, within 30 minutes, using only tools that are included with the Prime Mover of which runs the same size tire and wheel assembly. | DEMO | FIRST PRODUCTION ARTICLE |
| A1.2.5.4.4.7 | The Trailer Chassis must have wheel splash and stone throw protection above all wheels and mud flaps behind the rear wheels. | INSPECTION | FIRST PRODUCTION ARTICLE |
| A1.2.5.4.5 | **Electrical System** | | |
| A1.2.5.4.5.1 | The Trailer Chassis must have a 24 VDC Standard Military Pattern (SMP) lighting system IAW STANAG 2601 ED.3. The Lamps, reflectors, and signals must be IAW MIL-STD-1179. | INSPECTION | FIRST PRODUCTION ARTICLE |

| | | | |
|---|---|---|---|
| A1.2.5.4.5.2 | The Trailer Chassis must have a blackout lighting system IAW STANAG 4381. | | |
| A1.2.5.4.5.3 | The plug that connects to the prime mover must be IAW STANAG 4007 Ed 2. | | |
| A1.2.5.4.5.4 | All WTS electrical connectors or points of connection must have an Ingress Protection rating no less than IP56 IAW NEMA IEC 60529 or equivalent. | CERTIFICATION | FIRST PRODUCTION ARTICLE |
| A1.2.5.4.6 | **Stowage Compartments** | INSPECTION | FIRST PRODUCTION ARTICLE |
| A1.2.5.4.6.1 | The Trailer Chassis must have integrated Stowage Compartments, and be recessed within the dimensions stated in paragraph A1.3.2. | | |
| A1.2.5.4.6.2 | The Stowage Compartments must be of adequate size in order to store four (4) manufacturer supplied wheel chocks, two (2) large Cam nets, and any other tools or equipment specifically recommended and supplied by the manufacturer. | | |
| A1.2.5.4.6.3 | The Stowage Compartments must have a locking mechanism that will accept a padlock meeting ASTM F883-04 requirement F2S2. | | |
| A1.2.5.4.7 | **Data Plates and Markings** | INSPECTION | FIRST PRODUCTION ARTICLE |
| A1.2.5.4.7.1 | The Trailer Chassis must have a license plate holder, IAW SAE J686, mounted at the rear. | | |
| A1.2.5.4.7.2 | The Trailer Chassis must have the following information permanently affixed in a conspicuous and protected location: | | |
| A1.2.5.4.7.2.1 | The manufacturer's name, model number, model year and Vehicle Identification Number (VIN); | | |
| A1.2.5.4.7.2.2 | The GTW ratings; and | | |

| | | | |
|---|---|---|---|
| A1.2.5.4.7.2.3 | The load data. | | |
| A1.2.5.4.8 | **Drawbar and Accessories** | | |
| A1.2.5.4.8.1 | The Trailer Chassis must have a tow eye IAW STANAG 4101. | INSPECTION | FIRST PRODUCTION ARTICLE |
| A1.2.5.4.8.2 | The Drawbar must be compatible with the height of the pintle of each of the two (2) prime movers ± 5% (based on load and tire pressure). | ANALYSIS | FIRST PRODUCTION ARTICLE |
| A1.2.5.4.8.3 | The Drawbar must allow a swing radius between the rear of the two (2) Prime Movers and the Trailer, and must be IAW STANAG 4101. | | |
| A1.2.5.4.8.4 | The Trailer Chassis tow eye must have a setting for being secured in the fixed position, so that it can be towed by Vehicles with a rotating pintle hook. | INSPECTION | FIRST PRODUCTION ARTICLE |
| A1.2.5.4.8.5 | The Trailer Chassis tow eye must rotate around the longitudinal axis. | | |
| A1.2.5.4.8.6 | The Trailer Chassis must have safety chains that are sufficient in length and possess hooks at the ends of these safety chains that are compatible with the clevises of the two (2) prime movers. | ANALYSIS | FIRST PRODUCTION ARTICLE |
| A1.2.5.4.8.7 | The Trailer must have an adjustable front support leg in order to raise or lower the tongue, and stabilize the WTS when it is detached from either of the two (2) prime movers. | INSPECTION | FIRST PRODUCTION ARTICLE |
| A1.2.5.4.8.7.1 | The front support leg must fold or retract out of the way in a manner that will not affect the function of the WTS when it is attached to either of the two (2) prime movers. | ANALYSIS | FIRST PRODUCTION ARTICLE |
| A1.2.5.5 | **Walkways** | | |
| A1.2.5.5.1 | The Trailer must be equipped with a non-slip surface set of stairs, walkways and guardrails to allow access for the operation and | DEMO | |

| | | | |
|---|---|---|---|
| | maintenance of the WTU and MEU in the primary mode of employment of the WTS. | | FIRST PRODUCTION ARTICLE |
| A1.2.5.5.2 | The stairs walkways and guardrails must be detachable and stored on the Trailer. | | |
| A1.2.5.5.3 | The walkways must support three (3) personnel with weights IAW DCIEM Report 98-CR-15 for CF personnel. | ANALYSIS | FIRST PRODUCTION ARTICLE |
| A1.2.5.5.4 | Dimensions of the walkways and requirements for guardrails must meet the Canada Occupational Health and Safety Regulations (SOR/86-304) requirements. | | |
| A1.3 **Physical Characteristics** | | | |
| A1.3.1 **Weight** | | CERTIFICATION | FIRST PRODUCTION ARTICLE |
| A1.3.1.1 | The following weight restrictions must be adhered to: | | |
| A1.3.1.1.1 | WTS in its Primary Configuration (A1.1.3.1) with the cold weather components from the ASU cross-loaded into the MEU: 10,000 kg. | | |
| A1.3.2 **Size** | | CERTIFICATION | FIRST PRODUCTION ARTICLE |
| A1.3.2.1 | The dimensions of the WTS in its primary mode of employment and tires inflated to highway pressure must not exceed the following: | | |
| A1.3.2.1.1 | Height: 4.15 m; | | |
| A1.3.2.1.2 | Width: 2.6 m; and | | |
| A1.3.2.1.3 | Length: 6.0 m, including tongue. | | |

| | | | |
|---|---|---|---|
| A1.3.3 | **Colour** | INSPECTION | FIRST PRODUCTION ARTICLE |
| A1.3.3.1 | **Exterior** | | |
| A1.3.3.1.1 | The exterior of the WTS must be painted type II, colour 34088 (Olive Drab) Chemical Agent Resistant Coating (CARC) as per MIL-DTL-53072E excluding tires, glass surfaces, wiring and nameplates, decals, and soft materials. Refer to A6.0 APPENDIX: CHEMICAL AGENT RESISTANT COATING SYSTEM. | | |
| A1.3.3.2 | **Interior** | | |
| A1.3.3.2.1 | The interior of the WTS must be painted colour #17925 (gloss white) IAW AMS-STD-595 for the interior surfaces, except for all doors and access panel openings to the outside which must be painted as per A1.3.3.1.1. | | |
| A1.3.3.3 | **Non-Slip Surfaces and Hand/Foot Holds** | INSPECTION | FIRST PRODUCTION ARTICLE |
| A1.3.3.3.1 | All surfaces used for walking or as a step area to operate and maintain the WTS must have a non-slip texture which complies with MIL-PRF-24667C Performance Specification: Coating System, Non-Skid. | | |
| A1.3.3.3.2 | The WTS must have hand and foot holds to allow the operator to operate and maintain the WTS. | | |
| A1.3.4 | **QUADCON ISO Container Requirements** | | |
| A1.3.4.1 | QUADCON ISO Containers are one quarter length of the standard 20 foot long ISO container. | INSPECTION | FIRST PRODUCTION ARTICLE |
| A1.3.4.2 | The QUADCON ISO Containers must have eight (8) corner fittings IAW ISO 1161, Series 1 Freight Containers - Corner fittings - Specification, fourth edition 1984-12-15. | | |
| A1.3.4.3 | The QUADCON ISO Containers must have four (4) Container Couplers (Horizontal Twist locks), NSN 3040-01-387-4048, Connecting Link, Rigid (or equivalent), and have its own storage place inside the respective QUADCON. | | |

| | | | |
|---|---|---|---|
| A1.3.4.4 | The QUADCON ISO Containers must have four-way forklift pockets for handling as per ISO 1496-1. | | |
| A1.3.4.5 | No component must protrude past the exterior shell of the QUADCON ISO Containers, except the ISO corner fittings during intermodular/commercial shipping mode. | | |
| A1.3.4.6 | The exterior dimensions of the QUADCON ISO Containers must meet ISO 668, Series 1 Freight Containers - Classification, dimensions and ratings, designations 1F (8'H) (see Fig. 1.2): | ANALYSIS | FIRST PRODUCTION ARTICLE |
| 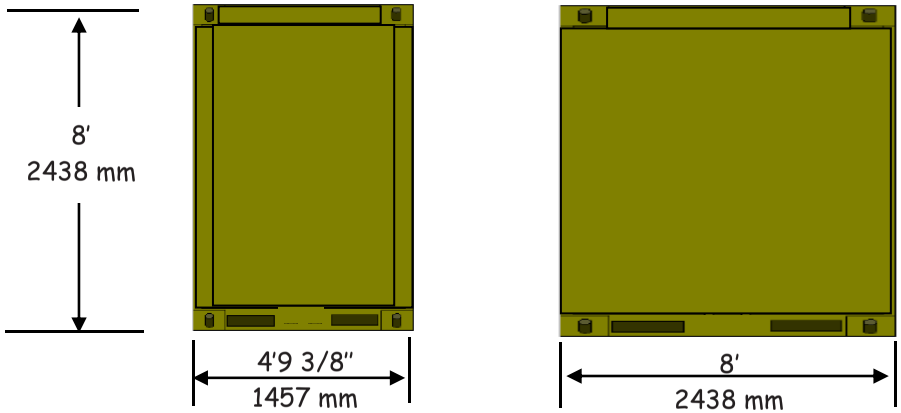  | | | |
| Figure 1.2 QUADCON ISO Containers Exterior Dimensions | | | |
| A1.3.4.7 | The QUADCON ISO Containers must be handled by Load Handling System (LHS), all containers-handling systems, and be shipped by commercial intermodular shipping system (air, road, rail or sea) IAW the International Convention for Safe Containers and the Safe Containers Convention Act. | ANALYSIS | FIRST PRODUCTION ARTICLE |
| A1.3.4.8 | The QUADCON ISO Containers must be manufactured as per ISO 668, ISO 1161, and ISO 1496-1 (latest editions). The structural members of the containers must be made of weathering steel. | CERTIFICATION | FIRST PRODUCTION ARTICLE |

| | | | |
|---|---|---|---|
| A1.3.4.9 | The QUADCON ISO Containers must pass the waterproofness test as per ISO 1496-1. | | |
| A1.3.4.10 | The QUADCON ISO Containers interior floors must be non-porous, easy to clean, slip resistant, highly durable, water resistant and scratch resistant. | INSPECTION | FIRST PRODUCTION ARTICLE |
| A1.3.4.11 | The QUADCON ISO Containers must be equipped with a non-slip roof access ladder or gab handle/foot steps. | | |
| A1.3.4.12 | **Certification of the ISO QUADCON Containers** | | |
| A1.3.4.12.1 | The ISO QUADCON Containers must be Convention for Safe Containers (CSC) certified as per International Association of Classification Societies. | CERTIFICATION | FIRST PRODUCTION ARTICLE |
| A1.3.4.12.1.1 | If attachment points or modifications made to the ISO QUADCON Containers are incorporated after receiving its initial build CSC certification, the original ISO QUADCON Container manufacture must verify that the CSC is still valid and if not issue a new CSC certification and plate. | | |
| A1.3.4.12.2 | The ISO QUADCON Containers must be affixed with the CSC plates. | INSPECTION | FIRST PRODUCTION ARTICLE |
| A1.3.4.13 | **Identification and Marking of the ISO QUADCON Containers** | | |
| A1.3.4.13.1 | A DND identification plate made of metal must be attached to each ISO QUADCON Container and one of the personnel doors IAW D-02-002-001/SG-001. | INSPECTION | FIRST PRODUCTION ARTICLE |
| A1.3.4.13.2 | IAW ISO 6346, the BIC (consisting of the DND Owner Code (CFCU), serial number and check digit) must be placed in the preferred horizontal format on the container as per the size and locations outlined in ISO 6346. | | |
| A1.3.4.13.3 | Each ISO QUADCON Container must also have its new ISO Alphanumeric Identification Number stenciled/decaled in the vertical | | |

| | | | |
|---|---|---|---|
| | format on the inside of the curb side corner panel near the personnel door. | | |
| A1.3.4.13.4 | All exterior ISO identification markings must be stenciled/decaled on each ISO QUADCON Container in a contrasting colour. | | |
| A1.3.4.13.5 | In order for DND to create the ISO Identification Numbers, the Contractor must provide: | | |
| A1.3.4.13.5.1 | Manufacturer serial number; | | |
| A1.3.4.13.5.2 | Manufacturer date; | | |
| A1.3.4.13.5.3 | Copies of the CSC certification, and | | |
| A1.3.4.13.5.4 | Drawing(s) of the ISO QUADCON Containers, with all interior attachment points and racks shown. | | |
| A1.3.4.13.6 | ISO Identification Numbers will be assigned and issued by DND. | | |
| A1.3.5 | **Noise Emissions** | TEST | FIRST PRODUCTION ARTICLE |
| A1.3.5.1 | The audible noise level generated by the WTU equipment must not exceed 87 dB (A) IAW the steady noise level permitted for a full eight-hour work shift as per the Occupational Exposure Limits in Canada (Federal) criterion. | | |
| A1.3.5.2 | The audible noise level generated by the WTS, while operating, must not exceed 70 dB (A) at any location seven (7) m away from the center of the noise source. | | |
| A1.4 | **Performance Characteristics** | | |
| A1.4.1 | **Water Production** | | |
| A1.4.1.1 | **Source Water Parameters** | | |

| | | | |
|---|---|---|---|
| A1.4.1.1.1 | The WTS must derive purified water from water sources with the following parameters across the climatic conditions outlined in A1.5.2: | | |

| Parameter | Level |
|---|---|
| Total Dissolved Solids (TDS) | 45,000 PPM |
| Turbidity | 200 NTU |
| Free Chlorine | 3 PPM |
| Water Temperature | Between 4ºC and 30ºC inclusive |
| pH | Between 5.5 and 8.3 inclusive |
| Hardness | 200 mg/Litre |
| Dissolved Organic Carbon (DOC) | 20 mg/Litre |

| | | | |
|---|---|---|---|
| A1.4.1.2 | **Water Quality Challenges** | TEST | PWFTS |
| A1.4.1.2.1 | The WTS must derive purified water from the specific source water challenges outlined in Appendix A5.0 to ANNEX A. | | |
| A1.4.1.3 | **Production Rates** | | |
| A1.4.1.3.1 | The WTS must produce purified water at the following production rates across the climatic conditions outlined in A1.5.1: | | |

| Water Source | Output Production | |
|---|---|---|
| | Litres/hour | Litres/day see note |
| Fresh Water | 1,250 | 25,000 |
| Sea Water | 625 | 12,500 |
| CBRN Contaminated Water | 625 | 12,500 |

| | | | |
|---|---|---|---|
| Note: A day is defined as twenty (20) hours of consecutive operation in the twenty-four (24) hour period. | | | |
| A1.4.1.3.2 | The WTS must meet the output quantities in A1.4.1.3.1 when its normal operating plane is at an angle of 10° in any direction from the horizontal. | | |
| A1.4.1.3.3 | The WTS must meet the output quantities in A1.4.1.3.1 when the WTS is located at sea level through to 2,000 m in elevation above sea level. | | |

| | | | |
|---|---|---|---|
| A1.4.1.4 | **Drinking Water Quality** | | |
| A1.4.1.4.1 | Water purified and treated by the WTS must meet the water quality requirements outlined in the Health Canada Guidelines for Canadian Drinking Water Quality (see the References – 2019 Guideline Technical Document and 2017 Summary Table). | | |
| A1.4.2 | **Mobility** | | |
| A1.4.2.1 | The WTS in its primary configuration must safely negotiate turns while being towed at posted speed limits on all Canadian highways (up to 110 km/h), without overturning, and while remaining stable at all times. | CERTIFICATION | FIRST PRODUCTION ARTICLE |
| A1.4.2.1.1 | The Dynamic Rollover Threshold must be defined by mathematical analysis and presented at CDR. | | |
| A1.4.2.2 | The WTS in its primary configuration must be pulled or backed through light vegetation without damage to exterior components. | | |
| A1.4.2.2.1 | Light vegetation is defined as small trees/brush with a stem diameter of 25 mm and 1.5 m in height. | | |
| A1.4.2.3 | The angle of departure of the WTS in the primary mode of employment must be 18° with the angle measured as per SAE J1100 dimension A106-2. Note that the Rear Impact Guard may be retracted to meet this requirement. | ANALYSIS | FIRST PRODUCTION ARTICLE |
| A1.4.2.4 | The WTS in the primary mode of employment must ford a water obstacle to a depth of 750 mm without preparation IAW with STANAG 2805 ED 5. | TEST | FIRST PRODUCTION ARTICLE |
| A1.5 | **Environmental and Climatic Characteristics** | | |
| A1.5.1 | **Environmental/Climatic Requirements** | | |
| A1.5.1.1 | The WTS must meet all performance requirements in this specification, without physical damage or degradation to the WTS and sub-systems, during and after | | |

| | | | |
|---|---|---|---|
| | exposure to any combination of the meteorological and induced environmental conditions and factors identified in this specification. | | |
| A1.5.2 | **Climatic Conditions** | | |
| A1.5.2.1 | The WTS must be stored in all climatic conditions and factors associated with climatic categories A1, A2, A3, B1, B2, B3, C0, C1, and C2 IAW AECTP 230, Edition 1, Leaflets 2311/1 through 2311/3 and STANAG 2895, Edition 1, Annex C. | | |
| A1.5.2.2 | The WTS must be towed, be on stand-by, and be operable in all climatic conditions and factors associated with A1, A2, A3, B1, B2, B3, C0, C1, and C2 climatic categories IAW AECTP 230, Edition 1, Leaflets 2311/1 through 2311/3 and STANAG 2895, Edition 1, Annex C. | | |
| A1.5.2.3 | The WTS must operate in relative humidity ranging from 5% to 100%. | | |
| A1.5.3 | **Environmental Conditions** | | |
| A1.5.3.1 | The WTS must operate in heavy rain up to 20 mm/h and rain driven by wind gusts up to eighty (80) km/h over a period of no less than three (3) hours. | | |
| A1.5.3.2 | The WTS must operate in blowing sand and dust caused by wind gusts up to eighty (80) km/h over a period of no less than three (3) hours. | | |
| A1.5.3.3 | The WTS including ancillary equipment must be resistant to UV rays, fire, water, POL products, insects, animals, rot, mildew, and corrosion. | | |

# A2.0 APPENDIX: CONTRACT DATA REQUIREMENTS LIST

## A2.1 CDRL Item List

| CDRL # | Title | DID # |
|---|---|---|
| WTS-PM-001 | Project Management Plan | WTS-PM-001 |
| WTS-PM-002 | Contract Master Schedule | WTS-PM-002 |
| WTS-PM-003 | Contract Work Breakdown Structure | WTS-PM-003 |
| WTS-PM-004 | Contract Status Report | WTS-PM-004 |
| WTS-PM-005 | Meeting Agenda | WTS-PM-005 |
| WTS-PM-006 | Meeting Minutes | WTS-PM-006 |
| WTS-SE-101 | Systems Engineering Management Plan | WTS-SE-101 |
| WTS-SE-102 | Mandated System Review Package | WTS-SE-102 |
| WTS-SE-103 | Requirements Traceability Verification Matrix | WTS-SE-103 |
| WTS-SE-104 | Engineering Drawings & Associated Lists | WTS-SE-104 |
| WTS-SE-105 | Engineering Change Proposals | WTS-SE-105 |
| WTS-SE-106 | Configuration Status Accounting Report | WTS-SE-106 |
| WTS-SE-107 | Acceptance Test Plan and Procedures | WTS-SE-107 |
| WTS-SE-108 | Acceptance Test Reports | WTS-SE-108 |
| WTS-ILS-201 | Top Level Assembly Drawing | WTS-ILS-201 |
| WTS-ILS-202 | WTS Operator Manual | WTS-ILS-202 |
| WTS-ILS-203 | WTU Operator Quick Reference Card | WTS-ILS-203 |
| WTS-ILS-204 | WTS Maintenance Manual | WTS-ILS-204 |
| WTS-ILS-205 | WTS Permissive Repair Schedule and Standard Repair Times | WTS-ILS-205 |
| WTS-ILS-206 | WTS Illustrated Parts Manual | WTS-ILS-206 |
| WTS-ILS-207 | WTS Operator Training Package | WTS-ILS-207 |
| WTS-ILS-208 | WTU and ASU Technician Training Package | WTS-ILS-208 |
| WTS-ILS-209 | WTS Preservation, Storage and Reactivation Instructions | WTS-ILS-209 |
| WTS-ILS-210 | WTS Stowage, Shipping, and Handling Instructions | WTS-ILS-210 |
| WTS-ILS-211 | WTS Data Summary | WTS-ILS-211 |
| WTS-ILS-212 | MEU, ASU and WSU Stowage Maps | WTS-ILS-212 |
| WTS-ILS-213 | WTU Process and Flow Diagrams | WTS-ILS-213 |
| WTS-ILS-214 | Provisioning Parts Breakdown | WTS-ILS-214 |
| WTS-ILS-215 | Supplementary Provisioning Technical Documentation | WTS-ILS-215 |
| WTS-ILS-216 | Special Tools and Test Equipment | WTS-ILS-216 |
| WTS-ILS-217 | Equipment Delivery Status Report | WTS-ILS-217 |
| WTS-ILS-218 | Identification Plates | WTS-ILS-218 |

| | | |
|---|---|---|
| WTS-ILS-219 | Controlled & Non-Controlled Goods List | WTS-ILS-219 |
| WTS-ILS-220 | Identification Labels for Storage and Shipment and Packaging Codes | WTS-ILS-220 |
| WTS-ILS-221 | List of Items to be Supported | WTS-ILS-221 |
| WTS-ILS-222 | Warranty Support Plan | WTS-ILS-222 |

## A2.2 CDRL Table Definitions

The following section defines the various blocks of information found on the CDRL forms:

**BLOCK 1 – SYSTEM / ITEM**
Provides the name of the System or Item for which the CDRL applies.

**BLOCK 2 – ITEM NUMBER**
The Item Number is a sequential three-digit number to uniquely identify the individual data item (CDRL number). Note that the 001-099 series is reserved to Project Management (PM) CDRLs, the 101-199 series is reserved to Systems Engineering (SE) CDRLs and the 201-299 series is reserved to Integrated Logistics Support (ILS) CDRLs.

**BLOCK 3 - TITLE OR DESCRIPTION OF DATA**
The title of the data item being referred to in this CDRL.

**BLOCK 4 - AUTHORITY (DATA ITEM NUMBER)**
Indicates the Data Item Description (DID) number to which this CDRL refers.

**BLOCK 5 - CONTRACT REFERENCE**
The specific paragraph number of the Contract Demand, Statement of Work, Request for Proposal, Specification, or other applicable document to assist in identifying the work effort associated with the data item.

**BLOCK 6 - FREQUENCY**
This block indicates the frequency of the delivered data. The following frequency codes are used:

| | |
|---|---|
| ANNLY | Annually |
| ASGEN | As generated |
| ASREQ | As required |
| BI-MO | Every 2 months |
| BI-WK | Every2 weeks |
| DAILY | Daily |
| MNTHY | Monthly |
| ONE/R | One time with revisions |
| OTIME | One time |
| QRTLY | Quarterly |
| R/ASR | Revisions as required |
| SEMIA | Semi-annually |
| WKLY | Weekly |

**BLOCK 7 – REQUIRING OFFICE**
Identifies the technical office of primary interest responsible for defining the data requirement, reviewing, acceptance and approval of the data item, and ensuring the adequacy of the delivered data.

**BLOCK 8 – SUBMISSION SCHEDULE**

**DATE OF 1ST SUBMISSION -** The initial submission date or associated constraint for the 1st submission of the data item is indicated in this block using typical abbreviations as listed above under Block 11.

**DATE OF SUBSEQUENT SUBMISSION / EVENT -** The date(s) of subsequent submission(s) or associated constraint(s) of the data item is indicated in this block.

**BLOCK 9 - DISTRIBUTION AND ADDRESSEES**

Indicates the addressees and the respective number of copies (hard copies and soft copies separately), for either the draft or first submissions (Sub-Block “Draft”), and for the final or subsequent submissions (Sub-Block “Final”), for which the data item is required.

## A2.3 **CDRL – Project Management Plan**

| **CONTRACT DATA REQUIREMENTS LIST** | | |
|---|---|---|
| 1. SYSTEM / ITEM<br>Water Treatment System | | |
| 2. ITEM NUMBER<br>CDRL WTS-PM-001 | 3. TITLE OR DESCRIPTION OF DATA<br>Project Management Plan (PMP) | 4. AUTHORITY (Data Item Number)<br>DID WTS-PM-001 |
| 5. CONTRACT REFERENCE<br>SOW: **Para. 3.2.1 (pg. 16)**<br>DID: **App. A3.3 (pg. 146)** | 6. FREQUENCY<br>R/ASR | 7. REQUIRING OFFICE<br>DND PMO |

8. SUBMISSION SCHEDULE

**First Submission:** The Contractor must provide a draft PMP for review at the Kick-off meeting.

**Response Time:** Comments on the draft PMP will be provided by Canada no later than 14 calendar days after receipt of the soft copy submission.

**Subsequent Submission(s):** The Contractor must provide a revised PMP, addressing Canada's comments, for review and possible acceptance no later than 14 calendar days after the receipt of Canada's comments.

**Response Time:** Comments or acceptance of the revised PMP will be provided by Canada no later than seven (7) calendar days after receipt of the soft copy submission.

9. DISTRIBUTION and ADDRESSEES

| A. ADDRESSEE | B. COPIES | | | |
|---|---|---|---|---|
| | DRAFT | | FINAL | |
| | Hard Copy | Soft Copy | Hard Copy | Soft Copy |
| DND TA | | 1 | | 1 |
| | | | | |
| | | | | |
| | | | | |
| | | | | |

## A2.4 **CDRL – Contract Master Schedule**

| **CONTRACT DATA REQUIREMENTS LIST** | | |
|---|---|---|
| 1. SYSTEM / ITEM<br>Water Treatment System | | |
| 2. ITEM NUMBER<br>CDRL WTS-PM-002 | 3. TITLE OR DESCRIPTION OF DATA<br>Contract Master Schedule (CMS) | 4. AUTHORITY (Data Item Number)<br>DID WTS-PM-002 |
| 5. CONTRACT REFERENCE<br>SOW: **Para. 3.3.1 (pg. 16)**<br>DID: **App. A3.4 (pg. 148)** | 6. FREQUENCY<br>R/ASR | 7. REQUIRING OFFICE<br>DND PMO |

8. SUBMISSION SCHEDULE

**First Submission:** The Contractor must provide a draft CMS for review at the Kick-off meeting.

**Response Time:** Comments on the draft CMS will be provided by Canada no later than 14 calendar days after receipt of the soft copy submission.

**Subsequent Submission(s):** The Contractor must provide a revised CMS, addressing Canada's comments, for review and possible acceptance no later than 14 calendar days after the receipt of Canada's comments.

**Response Time:** Comments or acceptance of the revised CMS will be provided by Canada no later than seven (7) calendar days after receipt of the soft copy submission.

**Monthly Submissions (when changed):** After acceptance by Canada, the Contractor must provide an updated CMS (when changed) on a monthly basis, aligned with the Contract Status Report, throughout the contract.

9. DISTRIBUTION and ADDRESSEES

| A. ADDRESSEE | B. COPIES | | | |
|---|---|---|---|---|
| | DRAFT | | FINAL | |
| | Hard Copy | Soft Copy | Hard Copy | Soft Copy |
| DND TA | | 1 | | 1 |
| PSPC CA | | | | 1 |
| DND PA | | | | 1 |
| DND ILSM | | | | 1 |
| | | | | |

## A2.5 **CDRL – Contract Work Breakdown Structure**

| CONTRACT DATA REQUIREMENTS LIST | | |
|---|---|---|
| 1. SYSTEM / ITEM<br>Water Treatment System | | |
| 2. ITEM NUMBER<br>CDRL WTS-PM-003 | 3. TITLE OR DESCRIPTION OF DATA<br>Contract Work Breakdown Structure (CWBS) | 4. AUTHORITY (Data Item Number)<br>DID WTS-PM-003 |
| 5. CONTRACT REFERENCE<br>SOW: **Para. 3.4.1 (pg. 16)**<br>DID: **App. A3.5 (pg. 150)** | 6. FREQUENCY<br>R/ASR | 7. REQUIRING OFFICE<br>DND PMO |

8. SUBMISSION SCHEDULE

**First Submission:** The Contractor must provide a draft CWBS for review no later than 28 calendar days after the Kick-off Meeting.

**Response Time:** Comments on the draft CWBS will be provided by Canada no later than 14 calendar days after receipt of the soft copy submission.

**Subsequent Submission(s):** The Contractor must provide a revised CWBS, addressing Canada's comments, for review and possible acceptance no later than 14 calendar days after the receipt of Canada's comments.

**Response Time:** Comments or acceptance of the revised CWBS will be provided by Canada no later than seven (7) calendar days after receipt of the soft copy submission.

**Monthly Submissions (when changed):** After acceptance by Canada, the Contractor must provide an updated CWBS (when changed) on a monthly basis, aligned with the Contract Status Report, throughout the contract.

9. DISTRIBUTION and ADDRESSEES

| A. ADDRESSEE | B. COPIES | | | |
|---|---|---|---|---|
| | DRAFT | | FINAL | |
| | Hard Copy | Soft Copy | Hard Copy | Soft Copy |
| DND TA | | 1 | | 1 |
| PSPC CA | | | | 1 |
| DND PA | | | | 1 |
| DND ILSM | | 1 | | 1 |
| | | | | |

## A2.6 **CDRL – Contract Status Report**

| CONTRACT DATA REQUIREMENTS LIST | | |
|---|---|---|
| 1. SYSTEM / ITEM<br>Water Treatment System | | |
| 2. ITEM NUMBER<br>CDRL WTS-PM-004 | 3. TITLE OR DESCRIPTION OF DATA<br>Contract Status Report (CSR) | 4. AUTHORITY (Data Item Number)<br>DID WTS-PM-004 |
| 5. CONTRACT REFERENCE<br>SOW: **Para. 3.5.1 (pg. 17)**<br>DID: **App. A3.6 (pg. 152)** | 6. FREQUENCY<br>MNTHY | 7. REQUIRING OFFICE<br>DND PMO |

8. SUBMISSION SCHEDULE

**First Submission:** The Contractor must provide a draft CSR for review no later than 28 calendar days after the Kick-off Meeting.

**Response Time:** Comments on the draft CSR will be provided by Canada no later than 14 calendar days after receipt of the soft copy submission.

**Subsequent Submission(s):** The Contractor must provide a revised CSR, addressing Canada's comments, for review and possible acceptance no later than seven (7) calendar days after the receipt of Canada's comments.

**Response Time:** Comments or acceptance of the revised CSR will be provided by Canada no later than seven (7) calendar days after receipt of the soft copy submission.

**Monthly Submissions:** After acceptance by Canada, the Contractor must provide a CSR on a monthly basis throughout the contract.

9. DISTRIBUTION and ADDRESSEES

| A. ADDRESSEE | B. COPIES | | | |
|---|---|---|---|---|
| | DRAFT | | FINAL | |
| | Hard Copy | Soft Copy | Hard Copy | Soft Copy |
| DND TA | | 1 | | 1 |
| PSPC CA | | | | 1 |
| DND PA | | | | 1 |
| DND ILSM | | | | 1 |
| | | | | |

## A2.7 **CDRL – Meeting Agenda**

| CONTRACT DATA REQUIREMENTS LIST | | |
|---|---|---|
| 1. SYSTEM / ITEM<br>Water Treatment System | | |
| 2. ITEM NUMBER<br>CDRL WTS-PM-005 | 3. TITLE OR DESCRIPTION OF DATA<br>Meeting Agenda | 4. AUTHORITY (Data Item Number)<br>DID WTS-PM-005 |
| 5. CONTRACT REFERENCE<br>SOW: **Para. 3.6.6.1.1 (pg. 18)**<br>DID: **App. A3.7 (pg. 154)** | 6. FREQUENCY<br>ASREQ | 7. REQUIRING OFFICE<br>DND PMO |

8. SUBMISSION SCHEDULE

**First Submission:** The Contractor must provide a draft Meeting Agenda for review no later than seven (7) calendar days prior to each meeting.

**Response Time:** Comments on the draft Meeting Agenda, and additions and deletions of discussion items, will be provided by Canada no later than seven (7) calendar days after receipt of the soft copy submission.

**Subsequent Submission:** The Contractor must provide a revised Meeting Agenda, addressing Canada's comments, as a soft copy, one (1) business day before the meeting, and in hard copy at the meeting.

9. DISTRIBUTION and ADDRESSEES

| A. ADDRESSEE | B. COPIES | | | |
|---|---|---|---|---|
| | DRAFT | | FINAL | |
| | Hard Copy | Soft Copy | Hard Copy | Soft Copy |
| PSPC CA | | 1 | | 1 |
| DND TA | | 1 | | 1 |
| DND PA | | 1 | | 1 |
| | | | | |
| | | | | |

## A2.8 **CDRL – Meeting Minutes**

| CONTRACT DATA REQUIREMENTS LIST | | |
|---|---|---|
| 1. SYSTEM / ITEM<br>Water Treatment System | | |
| 2. ITEM NUMBER<br>CDRL WTS-PM-006 | 3. TITLE OR DESCRIPTION OF DATA<br>Meeting Minutes | 4. AUTHORITY (Data Item Number)<br>DID WTS-PM-006 |
| 5. CONTRACT REFERENCE<br>SOW: **Para. 3.6.6.1.2 (pg. 18)**<br>DID: **App. A3.8 (pg. 155)** | 6. FREQUENCY<br>ASREQ | 7. REQUIRING OFFICE<br>DND PMO |

8. SUBMISSION SCHEDULE

**First Submission:** The Contractor must provide draft Meeting Minutes for review no later than seven (7) calendar days following each meeting.

**Response Time:** Comments on the draft Meeting Minutes will be provided by Canada no later than seven (7) calendar days after receipt of the soft copy submission.

**Subsequent Submission(s):** The Contractor must provide revised Meeting Minutes, addressing Canada's comments, for review and possible acceptance no later than seven (7) calendar days after receipt of Canada's comments.

**Response Time:** Comments or acceptance of the revised Meeting Minutes will be provided by Canada no later than seven (7) calendar days after receipt of the soft copy submission.

9. DISTRIBUTION and ADDRESSEES

| A. ADDRESSEE | B. COPIES | | | |
|---|---|---|---|---|
| | DRAFT | | FINAL | |
| | Hard Copy | Soft Copy | Hard Copy | Soft Copy |
| PSPC CA | | 1 | | 1 |
| DND TA | | 1 | | 1 |
| DND PA | | 1 | | 1 |
| | | | | |
| | | | | |

## A2.9 **CDRL – Systems Engineering Management Plan**

| CONTRACT DATA REQUIREMENTS LIST | | |
|---|---|---|
| 1. SYSTEM / ITEM<br>Water Treatment System | | |
| 2. ITEM NUMBER<br>CDRL WTS-SE-101 | 3. TITLE OR DESCRIPTION OF DATA<br>Systems Engineering Management Plan (SEMP) | 4. AUTHORITY (Data Item Number)<br>DID WTS-SE-101 |
| 5. CONTRACT REFERENCE<br>SOW: **Para. 4.2.2.1 (pg. 19)**<br>DID: **App. A3.9 (pg. 156)** | 6. FREQUENCY<br>QRTLY | 7. REQUIRING OFFICE<br>DND PMO |

8. SUBMISSION SCHEDULE

**First Submission:** The Contractor must provide a draft SEMP for review at Kick-off meeting.

**Response Time:** Comments on the draft SEMP will be provided by Canada no later than 14 calendar days after receipt of the soft copy submission.

**Subsequent Submission(s):** The Contractor must provide a revised SEMP, addressing Canada's comments, for review and possible acceptance no later than 14 calendar days after the receipt of Canada's comments.

**Response Time:** Comments or acceptance of the revised PMP will be provided by Canada no later than seven (7) calendar days after receipt of the soft copy submission.

**Quarterly Submissions:** After acceptance by Canada, the Contractor must provide a SEMP on a quarterly basis throughout the remainder of the contract, after changes have occurred.

9. DISTRIBUTION and ADDRESSEES

| A. ADDRESSEE | B. COPIES | | | |
|---|---|---|---|---|
| | DRAFT | | FINAL | |
| | Hard Copy | Soft Copy | Hard Copy | Soft Copy |
| DND TA | | 1 | | 1 |
| | | | | |
| | | | | |
| | | | | |
| | | | | |
| | | | | |

## A2.10 **CDRL – Mandated System Review Package**

| CONTRACT DATA REQUIREMENTS LIST | | |
|---|---|---|
| 1. SYSTEM / ITEM<br>Water Treatment System | | |
| 2. ITEM NUMBER<br>CDRL WTS-SE-102 | 3. TITLE OR DESCRIPTION OF DATA<br>Mandated System Review (MSR) Package | 4. AUTHORITY (Data Item Number)<br>DID WTS-SE-102 |
| 5. CONTRACT REFERENCE<br>SOW: **Para. 4.2.4.4 (pg. 20)**<br>DID: **App. A3.10 (pg. 161)** | 6. FREQUENCY<br>R/ASR | 7. REQUIRING OFFICE<br>DND PMO |

8. SUBMISSION SCHEDULE

**First Submission:** The Contractor must provide a draft MSR Package for review no later than 28 calendar days prior to each MSR meeting.

**Response Time:** Comments on the draft MSR Package will be provided by Canada no later than 14 calendar days after receipt of the soft copy submission.

**MSR Meeting Submission:** The Contractor must provide a revised MSR Package, addressing Canada's comments, for presentation and discussion, at the MSR meeting.

**Response Time:** Comments or acceptance of the revised MSR Package will be provided by Canada no later than seven (7) calendar days after the MSR meeting has concluded.

**Subsequent Submission(s):** The Contractor must provide a revised MSR Package, addressing Canada's comments, for review and possible acceptance no later than seven (7) calendar days after the receipt of Canada's comments.

9. DISTRIBUTION and ADDRESSEES

| A. ADDRESSEE | B. COPIES | | | |
|---|---|---|---|---|
| | DRAFT | | FINAL | |
| | Hard Copy | Soft Copy | Hard Copy | Soft Copy |
| DND TA | | 1 | | 1 |
| | | | | |
| | | | | |
| | | | | |
| | | | | |
| | | | | |

## A2.11 **CDRL – Requirements Traceability Verification Matrix**

| **CONTRACT DATA REQUIREMENTS LIST** | | |
|---|---|---|
| 1. SYSTEM / ITEM<br>Water Treatment System | | |
| 2. ITEM NUMBER<br>CDRL WTS-SE-103 | 3. TITLE OR DESCRIPTION OF DATA<br>Requirements Traceability Verification Matrix (RTVM) | 4. AUTHORITY (Data Item Number)<br>DID WTS-SE-103 |
| 5. CONTRACT REFERENCE<br>SOW: **Para. 4.2.5.1 (pg. 21)**<br>DID: **App. A3.11 (pg. 162)** | 6. FREQUENCY<br>R/ASR | 7. REQUIRING OFFICE<br>DND PMO |

8. SUBMISSION SCHEDULE

**First Submission:** The Contractor must provide a draft RTVM for review no later than 21 calendar days prior to each MSR meeting that requires it.

**Response Time:** Comments or acceptance of the draft RTVM will be provided by Canada no later than 14 calendar days after receipt of the soft copy submission.

**MSR Meeting Submission:** The Contractor must provide a revised RTVM, addressing Canada's comments, for presentation and discussion at the MSR meeting.

**Response Time:** Comments or acceptance of the revised RTVM will be provided by Canada no later than seven (7) calendar days after the MSR meeting has concluded.

**Subsequent Submission(s):** The Contractor must provide a revised RTVM, addressing Canada's comments, for review and possible acceptance no later than seven (7) calendar days after the receipt of Canada's comments.

**Final Submission**: The Contractor must provide the final and complete RTVM once the Acceptance Test Reports are accepted after completion of the Acceptance Verification.

9. DISTRIBUTION and ADDRESSEES

| A. ADDRESSEE | B. COPIES | | | |
|---|---|---|---|---|
| | DRAFT | | FINAL | |
| | Hard Copy | Soft Copy | Hard Copy | Soft Copy |
| DND TA | | 1 | | 1 |
| | | | | |
| | | | | |
| | | | | |
| | | | | |
| | | | | |

## A2.12 **CDRL – Engineering Drawings and Associated Lists**

| CONTRACT DATA REQUIREMENTS LIST | | |
|---|---|---|
| 1. SYSTEM / ITEM<br>Water Treatment System | | |
| 2. ITEM NUMBER<br>CDRL WTS-SE-104 | 3. TITLE OR DESCRIPTION OF DATA<br>Engineering Drawings and Associated Lists | 4. AUTHORITY (Data Item Number)<br>DID WTS-SE-104 |
| 5. CONTRACT REFERENCE<br>SOW: **Para. 4.4.3.1 (pg 26)**<br>DID: **App. A3.12 (pg. 164)** | 6. FREQUENCY<br>R/ASR | 7. REQUIRING OFFICE<br>DND PMO |

8. SUBMISSION SCHEDULE

**First Submission:** The Contractor must provide a draft Engineering Drawings and Associated Lists (Level 1 – Conceptual and Developmental Design) for review no later than 21 calendar days prior to the CDR meeting, to confirm the maturity of the system design.

**Response Time:** Comments on the draft Engineering Drawings and Associated Lists will be provided by Canada no later than 14 calendar days after receipt of the soft copy submission.

**CDR Meeting Submission:** The Contractor must provide a revised Engineering Drawings and Associated Lists, addressing Canada's comments, for presentation and discussion at the CDR meeting.

**Response Time:** Comments or acceptance of the revised Engineering Drawings and Associated Lists will be provided by Canada no later than seven (7) calendar days after the CDR meeting has concluded.

**Subsequent Submission:** The Contractor must provide a final Engineering Drawings and Associated Lists (Level 2 – Production Prototype and Limited Production), for review no later than 21 calendar days prior to the PCA meeting.

**Response Time:** Comments on the final Engineering Drawings and Associated Lists will be provided by Canada no later than 14 calendar days after receipt of the soft copy submission.

**PCA Meeting Submission:** The Contractor must provide a revised final Engineering Drawings and Associated Lists, addressing Canada's comments, for discussion and use during the PCA meeting.

**Response Time:** Comments or acceptance of the revised final Engineering Drawings and Associated Lists will be provided by Canada no later than seven (7) calendar days after the PCA meeting has concluded.

9. DISTRIBUTION and ADDRESSEES

| A. ADDRESSEE | B. COPIES | | | |
|---|---|---|---|---|
| | DRAFT | | FINAL | |
| | Hard Copy | Soft Copy | Hard Copy | Soft Copy |
| DND TA | | 1 | | 1 |
| | | | | |
| | | | | |
| | | | | |
| | | | | |
| | | | | |

## A2.13 **CDRL – Engineering Change Proposal**

| **CONTRACT DATA REQUIREMENTS LIST** | | |
|---|---|---|
| 1. SYSTEM / ITEM<br>Water Treatment System | | |
| 2. ITEM NUMBER<br>CDRL WTS-SE-105 | 3. TITLE OR DESCRIPTION OF DATA<br>Engineering Change Proposal (ECP) | 4. AUTHORITY (Data Item Number)<br>DID WTS-SE-105 |
| 5. CONTRACT REFERENCE<br>SOW: **Para. 5.4.2 (pg 28)**<br>DID: **App. A3.13 (pg. 165)** | 6. FREQUENCY<br>ASGEN | 7. REQUIRING OFFICE<br>DND PMO |

8. SUBMISSION SCHEDULE

**First Submission:** The Contractor must provide a draft ECP for review as required.

**Response Time:** Comments on the draft ECP will be provided by Canada no later than 14 calendar days after receipt of the soft copy submission.

**Subsequent Submission(s):** The Contractor must provide a revised ECP, addressing Canada's comments, for review and possible acceptance no later than 14 calendar days after the receipt of Canada's comments.

**Response Time:** Comments or acceptance of the revised ECP will be provided by Canada no later than seven (7) calendar days after receipt of the soft copy submission.

9. DISTRIBUTION and ADDRESSEES

| A. ADDRESSEE | B. COPIES | | | |
|---|---|---|---|---|
| | DRAFT | | FINAL | |
| | Hard Copy | Soft Copy | Hard Copy | Soft Copy |
| DND TA | | 1 | | 1 |
| | | | | |
| | | | | |
| | | | | |
| | | | | |
| | | | | |

## A2.14 **CDRL – Configuration Status Accounting Report**

| CONTRACT DATA REQUIREMENTS LIST | | |
|---|---|---|
| 1. SYSTEM / ITEM<br>Water Treatment System | | |
| 2. ITEM NUMBER<br>CDRL WTS-SE-106 | 3. TITLE OR DESCRIPTION OF DATA<br>Configuration Status Accounting (CSA) Report | 4. AUTHORITY (Data Item Number)<br>DID WTS-SE-106 |
| 5. CONTRACT REFERENCE<br>SOW: **Para. 5.5.2 (pg 29)**<br>DID: **App. A3.14 (pg. 172)** | 6. FREQUENCY<br>BI-MO | 7. REQUIRING OFFICE<br>DND PMO |

8. SUBMISSION SCHEDULE

**First Submission:** The Contractor must provide a draft CSA Report for review no later than 28 calendar days after the CDR meeting has concluded.

**Response Time:** Comments on the draft CSA Report will be provided by Canada no later than 14 calendar days after receipt of the soft copy submission.

**Subsequent Submission(s):** The Contractor must provide a revised CSA Report, addressing Canada's comments, for review and possible acceptance no later than 14 calendar days after the receipt of Canada's comments.

**Response Time:** Comments or acceptance of the revised CSA Report will be provided by Canada no later than seven (7) calendar days after receipt of the soft copy submission.

**Bi-Monthly Submissions:** After acceptance by Canada, the Contractor must provide a CSA Report on a bi-monthly basis throughout the remainder of the contract, after changes have occurred.

9. DISTRIBUTION and ADDRESSEES

| A. ADDRESSEE | B. COPIES | | | |
|---|---|---|---|---|
| | DRAFT | | FINAL | |
| | Hard Copy | Soft Copy | Hard Copy | Soft Copy |
| DND TA | | 1 | | 1 |
| | | | | |
| | | | | |
| | | | | |
| | | | | |
| | | | | |

## A2.15 **CDRL – Acceptance Test Plan and Procedures**

| CONTRACT DATA REQUIREMENTS LIST | | |
|---|---|---|
| 1. SYSTEM / ITEM<br>Water Treatment System | | |
| 2. ITEM NUMBER<br>CDRL WTS-SE-107 | 3. TITLE OR DESCRIPTION OF DATA<br>Acceptance Test Plan and Procedures (ATP&P) | 4. AUTHORITY (Data Item Number)<br>DID WTS-SE-107 |
| 5. CONTRACT REFERENCE<br>SOW: **Para. 6.2.4 (pg. 39)**<br>DID: **App. A3.15 (pg. 174)** | 6. FREQUENCY<br>R/ASR | 7. REQUIRING OFFICE<br>DND PMO |

8. SUBMISSION SCHEDULE

**First Submission:** The Contractor must provide a draft ATP&P for review no later than 28 calendar days prior to the TRR meeting.

**Response Time:** Comments on the draft ATP&P will be provided by Canada no later than 14 calendar days after receipt of the soft copy submission.

**TRR Meeting Submission:** The Contractor must provide a revised ATP&P, addressing Canada's comments, for presentation and discussion, at the TRR meeting.

**Response Time:** Comments or acceptance of the revised ATP&P will be provided by Canada no later than seven (7) calendar days after the TRR meeting has concluded.

**Subsequent Submission(s):** The Contractor must provide a revised TRR Package, addressing Canada's comments, for review and possible acceptance no later than seven (7) calendar days after the receipt of Canada's comments.

9. DISTRIBUTION and ADDRESSEES

| A. ADDRESSEE | B. COPIES | | | |
|---|---|---|---|---|
| | DRAFT | | FINAL | |
| | Hard Copy | Soft Copy | Hard Copy | Soft Copy |
| DND TA | | 1 | | 1 |
| | | | | |
| | | | | |
| | | | | |
| | | | | |
| | | | | |

## A2.16 **CDRL – Acceptance Test Reports**

| **CONTRACT DATA REQUIREMENTS LIST** | | |
|---|---|---|
| 1. SYSTEM / ITEM<br>Water Treatment System | | |
| 2. ITEM NUMBER<br>CDRL WTS-SE-108 | 3. TITLE OR DESCRIPTION OF DATA<br>Acceptance Test Reports (ATRs) | 4. AUTHORITY (Data Item Number)<br>DID WTS-SE-108 |
| 5. CONTRACT REFERENCE<br>SOW: **Para. 6.2.5 (pg. 39)**<br>DID: **App. A3.16 (pg. 177)** | 6. FREQUENCY<br>R/ASR | 7. REQUIRING OFFICE<br>DND PMO |

8. SUBMISSION SCHEDULE

**First Submission:** The Contractor must provide draft ATRs for review no later than seven (7) calendar days after Acceptance Verification completion.

**Response Time:** Comments on the ATRs will be provided by Canada no later than 14 calendar days after receipt of the soft copy submission.

**Subsequent Submission(s):** The Contractor must provide revised ATRs, addressing Canada's comments, for review and possible acceptance no later than 14 calendar days after the receipt of Canada's comments.

**Response Time:** Comments or acceptance of the revised ATRs will be provided by Canada no later than 14 calendar days after receipt of the soft copy submission.

9. DISTRIBUTION and ADDRESSEES

| A. ADDRESSEE | B. COPIES | | | |
|---|---|---|---|---|
| | DRAFT | | FINAL | |
| | Hard Copy | Soft Copy | Hard Copy | Soft Copy |
| DND TA | | 1 | | 1 |
| | | | | |
| | | | | |
| | | | | |
| | | | | |
| | | | | |

## A2.17 **CDRL – Top Level Assembly Drawing**

| CONTRACT DATA REQUIREMENTS LIST | | |
|---|---|---|
| 1. SYSTEM / ITEM<br>Water Treatment System | | |
| 2. ITEM NUMBER<br>CDRL WTS-ILS-201 | 3. TITLE OR DESCRIPTION OF DATA<br>Top Level Assembly Drawing | 4. AUTHORITY (Data Item Number)<br>DID WTS-ILS-201 |
| 5. CONTRACT REFERENCE<br>SOW: **Para. 3.6.2.2 (pg. 17)**<br>DID: **App. A3.17 (pg. 179)** | 6. FREQUENCY<br>ONE/R | 7. REQUIRING OFFICE<br>DND ILS Manager |

8. SUBMISSION SCHEDULE

**First Submission:** The Contractor must provide a draft TLAD for review by Canada during the Kick-Off Meeting.

**Response Time:** Comments on the draft TLAD will be provided by Canada no later than seven (7) calendar days after receipt of the hard and soft copy submission.

**Subsequent Submission(s):** The Contractor must provide a revised TLAD, addressing Canada's comments, for review and possible acceptance no later than seven (7) calendar days after the receipt of Canada's comments.

**Response Time:** Comments or acceptance of the revised TLAD will be provided by Canada no later than seven (7) calendar days after receipt of the hard and soft copy submission.

9. DISTRIBUTION and ADDRESSEES

| A. ADDRESSEE | B. COPIES | | | |
|---|---|---|---|---|
| | DRAFT | | FINAL | |
| | Hard Copy | Soft Copy | Hard Copy | Soft Copy |
| DND ILSM | 1 | 1 | 1 | 1 |
| | | | | |
| | | | | |
| | | | | |
| | | | | |

## A2.18 **CDRL – WTS Operator Manual**

| **CONTRACT DATA REQUIREMENTS LIST** | | |
|---|---|---|
| 1. SYSTEM / ITEM<br>Water Treatment System | | |
| 2. ITEM NUMBER<br>CDRL WTS-ILS-202 | 3. TITLE OR DESCRIPTION OF DATA<br>WTS Operator Manual | 4. AUTHORITY (Data Item Number)<br>DID WTS-ILS-202 |
| 5. CONTRACT REFERENCE<br>SOW: **Para. 8.3.1.1.1 (pg. 43)**<br>DID: **App. A3.18 (pg. 180)** | 6. FREQUENCY<br>ONE/R | 7. REQUIRING OFFICE<br>DND ILS Manager |

8. SUBMISSION SCHEDULE

**First Submission (English):** The Contractor must provide a draft English WTS Operator Manual for review by Canada no later than 105 days following Acceptance Verification.

**Response Time:** Comments on the draft English WTS Operator Manual will be provided by Canada no later than 70 days after receipt of the hard copy submission.

**Subsequent Submission(s) (English):** The Contractor must provide a revised English WTS Operator Manual, addressing Canada's comments, for review and possible acceptance no later than 63 days after the receipt of Canada's comments.

**Response Time:** Comments or acceptance of the revised English WTS Operator Manual will be provided by Canada no later than 28 days after receipt of the hard copy submission.

**First Submission (Bilingual):** The Contractor must provide a draft Bilingual WTS Operator Manual for review by Canada no later than 112 days after the acceptance of the English WTS Operator Manual.

**Response Time:** Comments on the draft Bilingual WTS Operator Manual will be provided by Canada no later than 42 days after receipt of the hard copy submission.

**Subsequent Submission(s) (Bilingual):** The Contractor must provide a revised Bilingual WTS Operator Manual, addressing Canada's comments, for review and possible acceptance no later than 28 days after the receipt of Canada's comments.

**Response Time:** Comments or acceptance of the revised Bilingual WTS Operator Manual will be provided by Canada no later than 21 days after receipt of the hard copy submission.

9. DISTRIBUTION and ADDRESSEES

| A. ADDRESSEE | B. COPIES | | | |
|---|---|---|---|---|
| | DRAFT | | FINAL | |
| | Hard Copy | Soft Copy | Hard Copy | Soft Copy |
| DND ILSM | 1 | 1 | 1 | 1 |
| Issued with each WTS | | | 1 | 1 |
| | | | | |
| | | | | |
| | | | | |
| | | | | |
| | | | | |
| | | | | |
| | | | | |
| | | | | |
| | | | | |
| | | | | |
| | | | | |
| | | | | |
| | | | | |
| | | | | |

## A2.19 **CDRL – WTU Operator Quick Reference Card**

| **CONTRACT DATA REQUIREMENTS LIST** | | |
|---|---|---|
| 1. SYSTEM / ITEM<br>Water Treatment System | | |
| 2. ITEM NUMBER<br>CDRL WTS-ILS-203 | 3. TITLE OR DESCRIPTION OF DATA<br>WTU Operator Quick Reference Card | 4. AUTHORITY (Data Item Number)<br>DID WTS-ILS-203 |
| 5. CONTRACT REFERENCE<br>SOW **Para. 8.3.1.2.1 (pg. 43)**<br>DID: **App. A3.19 (pg. 182)** | 6. FREQUENCY<br>ONE/R | 7. REQUIRING OFFICE<br>DND ILS Manager |

8. SUBMISSION SCHEDULE

**First Submission (English):** The Contractor must provide a draft English WTU Operator Quick Reference Card for review by Canada at the same time as the submission of the second version of the English WTS Operator Manual.

**Response Time:** Comments on the draft English WTU Operator Quick Reference Card will be provided by Canada at the same time as the comments for the second revision of the English WTS Operator Manual.

**Subsequent Submission(s) English:** The Contractor must provide a revised English WTU Operator Quick Reference Card, addressing Canada's comments, for review and possible acceptance no later than 28 days after the receipt of Canada's comments.

**Response Time:** Comments or acceptance of the revised English WTU Operator Quick Reference Card will be provided by Canada no later than 21 calendar days after receipt of the hard copy submission.

**First Submission (Bilingual):** The Contractor must provide a draft Bilingual WTU Operator Quick Reference Card for review by Canada at the same time as the submission of the Bilingual WTS Operator Manual.

**Response Time:** Comments on the draft Bilingual WTU Operator Quick Reference Card will be provided by Canada at the same time as those for the first draft Bilingual WTS Operator Manual.

**Subsequent Submission(s) (Bilingual):** The Contractor must provide a revised Bilingual WTU Operator Quick Reference Card, addressing Canada's comments, for review and possible acceptance no later than 21 calendar days after the receipt of Canada's comments, or at any time modifications to the WTS Operator Manual also affect the WTU Operator Quick Reference Card.

**Response Time:** Comments or acceptance of the revised Bilingual WTU Operator Quick Reference Card will be provided by Canada no later than 21 calendar days after receipt of the hard copy submission.

9. DISTRIBUTION and ADDRESSEES

| A. ADDRESSEE | B. COPIES | | | |
|---|---|---|---|---|
| | DRAFT | | FINAL | |
| | Hard Copy | Soft Copy | Hard Copy | Soft Copy |
| DND ILSM | 1 | 1 | 1 | 1 |
| Issued with each WTS | | | 1 | 1 |
| | | | | |

## A2.20 **CDRL – WTS Maintenance Manual**

| **CONTRACT DATA REQUIREMENTS LIST** | | |
|---|---|---|
| 1. SYSTEM / ITEM<br>Water Treatment System | | |
| 2. ITEM NUMBER<br>CDRL WTS-ILS-204 | 3. TITLE OR DESCRIPTION OF DATA<br>WTS Maintenance Manual | 4. AUTHORITY (Data Item Number)<br>DID WTS-ILS-204 |
| 5. CONTRACT REFERENCE<br>SOW **Para. 8.3.1.3.1 (pg. 43)**<br>DID: **App. A3.20 (pg. 184)** | 6. FREQUENCY<br>ONE/R | 7. REQUIRING OFFICE<br>DND ILS Manager |

8. SUBMISSION SCHEDULE

**First Submission (English):** The Contractor must provide a draft English WTS Maintenance Manual for review by Canada no later than 126 days following Acceptance Verification.

**Response Time:** Comments on the draft English WTS Maintenance Manual will be provided by Canada no later than 70 days after receipt of the hard copy submission.

**Subsequent Submission(s) (English):** The Contractor must provide a revised English WTS Maintenance Manual, addressing Canada's comments, for review and possible acceptance no later than 70 days after the receipt of Canada's comments.

**Response Time:** Comments or acceptance of the revised English WTS Maintenance Manual will be provided by Canada no later than 35 days after receipt of the hard copy submission.

**First Submission (Bilingual):** The Contractor must provide a draft Bilingual WTS Maintenance Manual for review by Canada no later than 102 days after the acceptance of the English WTS Maintenance Manual.

**Response Time:** Comments on the draft Bilingual WTS Maintenance Manual will be provided by Canada no later than 42 days after receipt of the hard copy submission.

**Subsequent Submission(s) (Bilingual):** The Contractor must provide a revised Bilingual WTS Maintenance Manual, addressing Canada's comments, for review and possible acceptance no later than 28 days after the receipt of Canada's comments.

**Response Time:** Comments or acceptance of the revised Bilingual WTS Maintenance Manual will be provided by Canada no later than 21 days after receipt of the hard copy submission.

9. DISTRIBUTION and ADDRESSEES

| A. ADDRESSEE | B. COPIES | | | |
|---|---|---|---|---|
| | DRAFT | | FINAL | |
| | Hard Copy | Soft Copy | Hard Copy | Soft Copy |
| DND ILSM | 1 | 1 | 1 | 1 |
| Issued with each WTS | | | 1 | 1 |
| | | | | |
| | | | | |
| | | | | |
| | | | | |
| | | | | |
| | | | | |
| | | | | |
| | | | | |
| | | | | |
| | | | | |
| | | | | |
| | | | | |
| | | | | |

## A2.21 **CDRL – WTS Permissive Repair Schedule and Standard Repair Times**

| **CONTRACT DATA REQUIREMENTS LIST** | | |
|---|---|---|
| 1. SYSTEM / ITEM<br>Water Treatment System | | |
| 2. ITEM NUMBER<br>CDRL WTS-ILS-205 | 3. TITLE OR DESCRIPTION OF DATA<br>WTS Permissive Repair Schedule and Standard Repair Times | 4. AUTHORITY (Data Item Number)<br>DID WTS-ILS-205 |
| 5. CONTRACT REFERENCE<br>SOW **Para. 8.3.1.4.1 (pg. 43)**<br>DID: **App. A3.21 (pg. 186)** | 6. FREQUENCY<br>ONE/R | 7. REQUIRING OFFICE<br>DND ILS Manager |

8. SUBMISSION SCHEDULE

**First Submission (English):** The Contractor must provide a draft English WTS Permissive Repair Schedule and Standard Repair Times for review by Canada no later than 28 days following the acceptance of the English WTS Maintenance Manual.

**Response Time:** Comments on the draft English WTS Permissive Repair Schedule and Standard Repair Times will be provided by Canada no later than 21 days after receipt of the hard copy submission.

**Subsequent Submission(s) English:** The Contractor must provide a revised English WTS Permissive Repair Schedule and Standard Repair Times, addressing Canada's comments, for review and possible acceptance no later than 14 days after the receipt of Canada's comments.

**Response Time:** Comments or acceptance of the revised English WTS Permissive Repair Schedule and Standard Repair Times will be provided by Canada no later than 14 days after receipt of the hard copy submission.

**First Submission (Bilingual):** The Contractor must provide a draft Bilingual WTS Permissive Repair Schedule and Standard Repair Times for review by Canada no later than 28 days following the acceptance of the Bilingual WTS Maintenance Manual.

**Response Time:** Comments on the draft Bilingual WTS Permissive Repair Schedule and Standard Repair Times will be provided by Canada no later than 21 days after receipt of the hard copy submission.

**Subsequent Submission(s) (Bilingual):** The Contractor must provide a revised Bilingual WTS Permissive Repair Schedule and Standard Repair Times, addressing Canada's comments, for review and possible acceptance no later than 14 days after the receipt of Canada's comments, or at any time modifications are required to the WTS Permissive Repair Schedule and Standard Repair Times due to changes made to the WTS Maintenance Manual that also affect the former.

**Response Time:** Comments or acceptance of the revised Bilingual WTS Permissive Repair Schedule and Standard Repair Times will be provided by Canada no later than 14 calendar days after receipt of the hard copy submission.

9. DISTRIBUTION and ADDRESSEES

| A. ADDRESSEE | B. COPIES | | | |
|---|---|---|---|---|
| | DRAFT | | FINAL | |
| | Hard Copy | Soft Copy | Hard Copy | Soft Copy |
| DND ILSM | 1 | 1 | 1 | 1 |
| | | | | |
| | | | | |
| | | | | |
| | | | | |
| | | | | |

## A2.22 **CDRL – WTS Illustrated Parts Manual**

| CONTRACT DATA REQUIREMENTS LIST | | |
|---|---|---|
| 1. SYSTEM / ITEM<br>Water Treatment System | | |
| 2. ITEM NUMBER<br>CDRL WTS-ILS-206 | 3. TITLE OR DESCRIPTION OF DATA<br>WTS Illustrated Parts Manual | 4. AUTHORITY (Data Item Number)<br>DID WTS-ILS-206 |
| 5. CONTRACT REFERENCE<br>SOW **Para. 8.3.1.5.1 (pg. 43)**<br>DID: **App. A3.22 (pg. 187)** | 6. FREQUENCY<br>ONE/R | 7. REQUIRING OFFICE<br>DND ILS Manager |

8. SUBMISSION SCHEDULE

**First Submission:** The Contractor must provide a draft WTS Illustrated Parts Manual for review by Canada no later than 126 days following Acceptance Verification.

**Response Time:** Comments on the draft WTS Illustrated Parts Manual will be provided by Canada no later than 91 days after receipt of the hard copy submission.

**Subsequent Submission(s):** The Contractor must provide a revised WTS Illustrated Parts Manual, addressing Canada's comments, for review and possible acceptance no later than 84 calendar days after the receipt of Canada's comments.

**Resonse Time:** Comments or acceptance of the revised WTS Illustrated Parts Manual will be provided by Canada no later than 42 calendar days after receipt of the hard copy submission.

**Note:** The Contractor must provide a subsequent submission of the WTS Illustrated Parts Manual if additional revisions or additions are required after completion of the IPC.

9. DISTRIBUTION and ADDRESSEES

| A. ADDRESSEE | B. COPIES | | | |
|---|---|---|---|---|
| | DRAFT | | FINAL | |
| | Hard Copy | Soft Copy | Hard Copy | Soft Copy |
| DND ILSM | 1 | 1 | 3 | 1 |
| | | | | |
| | | | | |
| | | | | |
| | | | | |
| | | | | |

## A2.23 **CDRL – WTS Operator Training Package**

| CONTRACT DATA REQUIREMENTS LIST | | |
|---|---|---|
| 1. SYSTEM / ITEM<br>Water Treatment System | | |
| 2. ITEM NUMBER<br>CDRL WTS-ILS-207 | 3. TITLE OR DESCRIPTION OF DATA<br>WTS Operator Training Package | 4. AUTHORITY (Data Item Number)<br>DID WTS-ILS-207 |
| 5. CONTRACT REFERENCE<br>SOW: **Para. 8.3.1.6.1 (pg. 44)**<br>DID: **App. A3.23 (pg. 189)** | 6. FREQUENCY<br>ONE/R | 7. REQUIRING OFFICE<br>DND ILS Manager |

8. SUBMISSION SCHEDULE

**First Submission (English):** The Contractor must provide a draft English WTS Operator Training Package for review by Canada at the same time as the submission of the second version of the English WTS Operator Manual.

**Response Time:** Comments on the draft English WTS Operator Training Package will be provided by Canada no later than 49 days after receipt of the hard copy submission.

**Subsequent Submission(s) (English):** The Contractor must provide a revised English WTS Operator Training Package, addressing Canada's comments, for review and possible acceptance no later than 35 days after the receipt of Canada's comments.

**Response Time:** Comments or acceptance of the revised English WTS Operator Training Package will be provided by Canada no later than 28 calendar days after receipt of the hard copy submission.

**First Submission (Bilingual):** The Contractor must provide a draft Bilingual WTS Operator Training Package for review by Canada no later than 70 days after the acceptance of the English WTS Operator Training Package.

**Response Time:** Comments on the draft Bilingual WTS Operator Training Package will be provided by Canada no later than 35 days after receipt of both the second version of the Bilingual WTS Operator Manual hard copy submission and the first version of the Bilingual WTS Operator Training Package hard copy submission.

**Subsequent Submission(s) (Bilingual):** The Contractor must provide a revised Bilingual WTS Operator Training Package, addressing Canada's comments, for review and possible acceptance no later than 28 calendar days after the receipt of Canada's comments, or at any time changes made to the WTS Operator Manual affect the former.

**Response Time:** Comments or acceptance of the revised Bilingual WTS Operator Training Package will be provided by Canada no later than 14 calendar days after receipt of the hard copy submission.

9. DISTRIBUTION and ADDRESSEES

| A. ADDRESS | B. COPIES | | | |
|---|---|---|---|---|
| | DRAFT | | FINAL | |
| | Hard Copy | Soft Copy | Hard Copy | Soft Copy |
| DND ILSM | 1 | 1 | 1 | 1 |
| Issued to Students at the Training Session(s) | | | 1 – Student Handout only | 1 – CD of the WTS Operator Training Package |
| | | | | |
| | | | | |
| | | | | |
| | | | | |

## A2.24 **CDRL – WTU and ASU Technician Training Package**

| CONTRACT DATA REQUIREMENTS LIST | | |
|---|---|---|
| 1. SYSTEM / ITEM<br>Water Treatment System | | |
| 2. ITEM NUMBER<br>CDRL WTS-ILS-208 | 3. TITLE OR DESCRIPTION OF DATA<br>WTU and ASU Technician Training Package | 4. AUTHORITY (Data Item Number)<br>DID WTS-ILS-208 |
| 5. CONTRACT REFERENCE<br>SOW: **Para. 8.3.1.7.1 (pg. 44)**<br>DID: **App. A3.24 (pg. 191)** | 6. FREQUENCY<br>ONE/R | 7. REQUIRING OFFICE<br>DND ILS Manager |

8. SUBMISSION SCHEDULE

**First Submission (English):** The Contractor must provide a draft English WTU and ASU Technician Training Package for review by Canada at the same time as the submission of the second version of the English WTS Maintenance Manual.

**Response Time:** Comments on the draft English WTU and ASU Technician Training Package will be provided by Canada no later than 49 days after receipt of the hard copy submission.

**Subsequent Submission(s) (English):** The Contractor must provide a revised English WTU and ASU Technician Training Package, addressing Canada's comments, for review and possible acceptance no later than 35 days after the receipt of Canada's comments.

**Response Time:** Comments or acceptance of the revised English WTU and ASU Technician Training Package will be provided by Canada no later than 28 calendar days after receipt of the hard copy submission.

**First Submission (Bilingual):** The Contractor must provide a draft Bilingual WTU and ASU Technician Training Package for review by Canada no later than 70 days after the acceptance of the English WTU and ASU Technician Training Package.

**Response Time:** Comments on the draft Bilingual WTU and ASU Technician Training Package will be provided by Canada no later than 35 days after receipt of both the second version of the Bilingual WTS Maintenance Manual hard copy submission and the second version of the Bilingual WTU and ASU Technician Training Package hard copy submission.

**Subsequent Submission(s) (Bilingual):** The Contractor must provide a revised Bilingual WTU and ASU Technician Training Package, addressing Canada's comments, for review and possible acceptance no later than 28 calendar days after the receipt of Canada's comments, or at any time modifications are required to the WTU and ASU Technician Training Package due to changes made to the WTS Maintenance Manual that also affect the former.

**Response Time:** Comments or acceptance of the revised Bilingual WTU and ASU Technician Training Package will be provided by Canada no later than 14 calendar days after receipt of the hard copy submission.

9. DISTRIBUTION and ADDRESSEES

| A. ADDRESS | B. COPIES | | | |
|---|---|---|---|---|
| | DRAFT | | FINAL | |
| | Hard Copy | Soft Copy | Hard Copy | Soft Copy |
| DND ILSM | 1 | 1 | 1 | 1 |
| Issued to Students at the Training Session(s) | | | 1 – Student Handout only | 1 – CD of the WTU and ASU Technician |
| | | | | |
| | | | | |
| | | | | |
| | | | | |

## A2.25 **CDRL – WTS Preservation, Storage and Reactivation Instructions**

| CONTRACT DATA REQUIREMENTS LIST | | |
|---|---|---|
| 1. SYSTEM / ITEM<br>Water Treatment System | | |
| 2. ITEM NUMBER<br>CDRL WTS-ILS-209 | 3. TITLE OR DESCRIPTION OF DATA<br>WTS Preservation, Storage and Reactivation Instructions | 4. AUTHORITY (Data Item Number)<br>DID WTS-ILS-209 |
| 5. CONTRACT REFERENCE<br>SOW: **Para. 8.3.1.8.1 (pg. 44)**<br>DID: **App. A3.25 (pg. 193)** | 6. FREQUENCY<br>ONE/R | 7. REQUIRING OFFICE<br>DND ILS Manager |

8. SUBMISSION SCHEDULE

**First Submission (English):** The Contractor must provide a draft English WTS Preservation, Storage and Reactivation Instructions for review by Canada at the same time as the first draft English WTS Maintenance Manual.

**Response Time:** Comments on the draft English WTS Preservation, Storage and Reactivation Instructions will be provided by Canada no later than 56 days after receipt of the hard copy submission.

**Subsequent Submission(s) (English):** The Contractor must provide a revised English WTS Preservation, Storage and Reactivation Instructions, addressing Canada's comments, for review and possible acceptance no later than 28 days after the receipt of Canada's comments.

**Response Time:** Comments or acceptance of the revised English WTS Preservation, Storage and Reactivation Instructions will be provided by Canada no later than 21 days after receipt of the hard copy submission.

**First Submission (Bilingual):** The Contractor must provide a draft Bilingual WTS Preservation, Storage and Reactivation Instructions for review by Canada no later than 84 days after the acceptance of the English WTS Preservation, Storage and Reactivation Instructions.

**Response Time:** Comments on the draft Bilingual WTS Preservation, Storage and Reactivation Instructions will be provided by Canada no later than 35 days after receipt of the hard copy submission.

**Subsequent Submission(s) (Bilingual):** The Contractor must provide a revised Bilingual WTS Preservation, Storage and Reactivation Instructions, addressing Canada's comments, for review and possible acceptance no later than 28 days after the receipt of Canada's comments.

**Response Time:** Comments or acceptance of the revised Bilingual WTS Preservation, Storage and Reactivation Instructions will be provided by Canada no later than 21 days after receipt of the hard copy submission.

9. DISTRIBUTION and ADDRESSEES

| A. ADDRESSEE | B. COPIES | | | |
|---|---|---|---|---|
| | DRAFT | | FINAL | |
| | Hard Copy | Soft Copy | Hard Copy | Soft Copy |
| DND ILSM | 1 | 1 | 1 | 1 |
| | | | | |
| | | | | |
| | | | | |
| | | | | |
| | | | | |

## A2.26 **CDRL – WTS Stowage, Shipping and Handling Instructions**

| **CONTRACT DATA REQUIREMENTS LIST** | | |
|---|---|---|
| 1. SYSTEM / ITEM<br>Water Treatment System | | |
| 2. ITEM NUMBER<br>CDRL WTS-ILS-210 | 3. TITLE OR DESCRIPTION OF DATA<br>WTS Stowage, Shipping and Handling Instructions | 4. AUTHORITY (Data Item Number)<br>DID WTS-ILS-210 |
| 5. CONTRACT REFERENCE<br>SOW: **Para. 8.3.1.9.1 (pg. 44)**<br>DID: **App. A3.26 (pg. 195)** | 6. FREQUENCY<br>ONE/R | 7. REQUIRING OFFICE<br>DND ILS Manager |

8. SUBMISSION SCHEDULE

**First Submission (English):** The Contractor must provide a draft English WTS Stowage, Shipping and Handling Instructions for review by Canada no later than 98 days following Acceptance Verification.

**Response Time:** Comments on the draft English WTS Stowage, Shipping and Handling Instructions will be provided by Canada no later than 35 days after receipt of the hard copy submission.

**Subsequent Submission(s) (English):** The Contractor must provide a revised English WTS Stowage, Shipping and Handling Instructions, addressing Canada's comments, for review and possible acceptance no later than 35 days after the receipt of Canada's comments.

**Response Time:** Comments or acceptance of the revised English WTS Stowage, Shipping and Handling Instructions will be provided by Canada no later than 21 days after receipt of the hard copy submission.

**First Submission (Bilingual):** The Contractor must provide a draft Bilingual WTS Stowage, Shipping and Handling Instructions for review by Canada no later than 63 days after the acceptance of the English WTS Preservation, Storage and Reactivation Instructions.

**Response Time:** Comments on the draft Bilingual WTS Stowage, Shipping and Handling Instructions will be provided by Canada no later than 28 days after receipt of the hard copy submission.

**Subsequent Submission(s) (Bilingual):** The Contractor must provide a revised Bilingual WTS Stowage, Shipping and Handling Instructions, addressing Canada's comments, for review and possible acceptance no later than 28 days after the receipt of Canada's comments.

**Response Time:** Comments or acceptance of the revised Bilingual WTS Stowage, Shipping and Handling Instructions will be provided by Canada no later than 21 days after receipt of the hard copy submission.

9. DISTRIBUTION and ADDRESSEES

| A. ADDRESSEE | B. COPIES | | | |
|---|---|---|---|---|
| | DRAFT | | FINAL | |
| | Hard Copy | Soft Copy | Hard Copy | Soft Copy |
| DND ILSM | 1 | 1 | 1 | 1 |
| | | | | |
| | | | | |
| | | | | |
| | | | | |
| | | | | |

## A2.27 **CDRL – WTS Data Summary**

| **CONTRACT DATA REQUIREMENTS LIST** | | |
|---|---|---|
| 1. SYSTEM / ITEM<br>Water Treatment System | | |
| 2. ITEM NUMBER<br>CDRL WTS-ILS-211 | 3. TITLE OR DESCRIPTION OF DATA<br>WTS Data Summary | 4. AUTHORITY (Data Item Number)<br>DID WTS-ILS-211 |
| 5. CONTRACT REFERENCE<br>SOW: **Para. 8.3.1.10.1 (pg. 44)**<br>DID: **App. A3.27 (pg. 197)** | 6. FREQUENCY<br>ONE/R | 7. REQUIRING OFFICE<br>DND ILS Manager |

8. SUBMISSION SCHEDULE

**First Submission (English):** The Contractor must provide a draft English WTS Data Summary for review by Canada at the same time as the first draft English WTS Stowage, Shipping and Handling Instructions.

**Response Time:** Comments on the draft English WTS Data Summary will be provided by Canada at the same time as those against the first draft English WTS Stowage, Shipping and Handling Instructions.

**Subsequent Submission(s) (English):** The Contractor must provide a revised English WTS Data Summary, addressing Canada's comments, for review and possible acceptance at the same time as subsequent versions of the English WTS Stowage, Shipping and Handling Instructions are submitted, or no later than 21 days from the receipt of Canada's comments if it has already been accepted.

**Response Time:** Comments or acceptance of the revised English WTS Data Summary will be provided by Canada at the same time as those against subsequent versions of the English WTS Stowage, Shipping and Handling Instructions are submitted, or no later than 21 days from the receipt the hardcopy submission if it has already been accepted.

**First Submission (Bilingual):** The Contractor must provide a draft Bilingual WTS Data Summary for review by Canada no later than 35 days after the acceptance of the English WTS Data Summary.

**Response Time:** Comments on the draft Bilingual WTS Data Summary will be provided by Canada no later than 21 days after receipt of the hard copy submission.

**Subsequent Submission(s) (Bilingual):** The Contractor must provide a revised Bilingual WTS Data Summary, addressing Canada's comments, for review and possible acceptance no later than 21 days after the receipt of Canada's comments.

**Response Time:** Comments or acceptance of the revised Bilingual WTS Data Summary will be provided by Canada no later than 14 calendar days after receipt of the hard copy submission.

9. DISTRIBUTION and ADDRESSEES

| A. ADDRESSEE | B. COPIES | | | |
|---|---|---|---|---|
| | DRAFT | | FINAL | |
| | Hard Copy | Soft Copy | Hard Copy | Soft Copy |
| DND ILSM | 1 | 1 | 1 | 1 |
| | | | | |
| | | | | |
| | | | | |
| | | | | |
| | | | | |

## A2.28 **CDRL – MEU, ASU and WSU Stowage Maps**

| CONTRACT DATA REQUIREMENTS LIST | | |
|---|---|---|
| 1. SYSTEM / ITEM<br>Water Treatment System | | |
| 2. ITEM NUMBER<br>CDRL WTS-ILS-212 | 3. TITLE OR DESCRIPTION OF DATA<br>MEU, ASU and WSU Stowage Maps | 4. AUTHORITY (Data Item Number)<br>DID WTS-ILS-212 |
| 5. CONTRACT REFERENCE<br>SOW: **Para. 8.3.1.11.1 (pg. 44)**<br>DID: **App. A3.28 (pg. 199)** | 6. FREQUENCY<br>ONE/R | 7. REQUIRING OFFICE<br>DND ILS Manager |

8. SUBMISSION SCHEDULE

**First Submission:** The Contractor must provide draft MEU, ASU and WSU Stowage Maps for review by Canada at the same time as the first draft of the Illustrated Parts Manual.

**Response Time:** Comments on the draft MEU, ASU and WSU Stowage Maps will be provided by Canada no later than 28 days after receipt of the soft copy submission.

**Subsequent Submission(s):** The Contractor must provide a revised MEU, ASU and WSU Stowage Maps, addressing Canada's comments, for review and possible acceptance no later than 21 days after receipt of Canada's comments.

**Response Time:** As the NATO codification of stowed items progresses, Canada will provide the NATO stock numbers to the Contractor via email to then be included in the MEU, ASU and WSU Stowage Maps. Once all other aspects of the MEU, ASU and WSU Stowage Maps have been addressed, the Contractor need only supply the final Posters, with NSNs included, no later than 14 days after notification by Canada that the NATO codification is complete. If codification is unreasonably delayed by a third party, Canada may agree to accept an incomplete submission.

9. DISTRIBUTION and ADDRESSEES

| A. ADDRESSEE | B. COPIES | | | |
|---|---|---|---|---|
| | DRAFT | | FINAL | |
| | Hard Copy | Soft Copy | Hard Copy | Soft Copy |
| DND ILSM | 1 | 1 | 1 | 1 |
| MEU Map with each MEU | | | 1 | |
| ASU Map with each ASU | | | 1 | |
| WSU Map with each WSU | | | 1 | |

## A2.29 **CDRL – WTU Process and Flow Diagrams**

| CONTRACT DATA REQUIREMENTS LIST | | |
|---|---|---|
| 1. SYSTEM / ITEM<br>Water Treatment System | | |
| 2. ITEM NUMBER<br>CDRL WTS-ILS-213 | 3. TITLE OR DESCRIPTION OF DATA<br>WTU Process and Flow Diagrams | 4. AUTHORITY (Data Item Number)<br>DID WTS-ILS-213 |
| 5. CONTRACT REFERENCE<br>SOW: **Para. 8.3.1.12.1 (pg. 44)**<br>DID: **App. A3.29 (pg. 201)** | 6. FREQUENCY<br>ONE/R | 7. REQUIRING OFFICE<br>DND ILS Manager |

8. SUBMISSION SCHEDULE

**First Submission:** The Contractor must provide draft WTU Process and Flow Diagrams for review by Canada at the same time as the first draft of the English WTS Maintenance Manual.

**Response Time:** Comments on the draft WTU Process and Flow Diagrams will be provided by Canada no later than 42 days after receipt of the soft copy submission.

**Subsequent Submission(s):** The Contractor must provide revised WTU Process and Flow Diagrams, addressing Canada's comments, for review and possible acceptance no later than 28 days after receipt of Canada's comments.

**Response Time:** Comments or acceptance of the revised WTU Process and Flow Diagrams will be provided by Canada no later than 21 days after receipt of the soft copy submission.

9. DISTRIBUTION and ADDRESSEES

| A. ADDRESSEE | B. COPIES | | | |
|---|---|---|---|---|
| | DRAFT | | FINAL | |
| | Hard Copy | Soft Copy | Hard Copy | Soft Copy |
| DND ILSM | 1 | 1 | 1 | 1 |
| With each WTU | | | 1 | |
| | | | | |
| | | | | |
| | | | | |
| | | | | |

## A2.30 **CDRL – Provisioning Parts Breakdown**

| CONTRACT DATA REQUIREMENTS LIST | | |
|---|---|---|
| 1. SYSTEM / ITEM<br>Water Treatment System | | |
| 2. ITEM NUMBER<br>CDRL WTS-ILS-214 | 3. TITLE OR DESCRIPTION OF DATA<br>Provisioning Parts Breakdown | 4. AUTHORITY (Data Item Number)<br>DID WTS-ILS-214 |
| 5. CONTRACT REFERENCE<br>SOW: **Para. 8.4.3.1.1 (pg. 47)**<br>DID: **App. A3.30 (pg. 199)** | 6. FREQUENCY<br>ONE/R | 7. REQUIRING OFFICE<br>DND ILS Manager |

8. SUBMISSION SCHEDULE

**First Submission:** The Contractor must provide a draft Provisioning Parts Breakdown for review by Canada at the same time as the first WTS Illustrated Parts Manual draft submission.

**Response Time:** Comments on the draft Provisioning Parts Breakdown will be provided by Canada at the same time as those for the draft WTS Illustrated Parts Manual.

**Subsequent Submission(s):** The Contractor must provide a revised Provisioning Parts Breakdown, addressing Canada's comments, for review and possible acceptance along with the second and any subsequent submission of the Illustrated Parts Manual, as required.

**Response Time:** Comments or acceptance of the revised Provisioning Parts Breakdown will be provided by Canada no later than 21 days after receipt of the soft copy submission.

**Note:** The Contractor must provide a subsequent submission of the Provisioning Parts Breakdown if additional revisions or additions are required after completion of the IPC.

9. DISTRIBUTION and ADDRESSEES

| A. ADDRESSEE | B. COPIES | | | |
|---|---|---|---|---|
| | DRAFT | | FINAL | |
| | Hard Copy | Soft Copy | Hard Copy | Soft Copy |
| DND ILSM | | 1 | | 1 |
| | | | | |
| | | | | |
| | | | | |
| | | | | |
| | | | | |

## A2.31 **CDRL – Supplementary Provisioning Technical Documentation**

| **CONTRACT DATA REQUIREMENTS LIST** | | |
|---|---|---|
| 1. SYSTEM / ITEM<br>Water Treatment System | | |
| 2. ITEM NUMBER<br>CDRL WTS-ILS-215 | 3. TITLE OR DESCRIPTION OF DATA<br>Supplementary Provisioning Technical Documentation | 4. AUTHORITY (Data Item Number)<br>DID WTS-ILS-215 |
| 5. CONTRACT REFERENCE<br>SOW: **Para. 8.4.3.2.1 (pg. 47)**<br>DID: **App. A3.31 (pg. 206)** | 6. FREQUENCY<br>ONE/R | 7. REQUIRING OFFICE<br>DND ILS Manager |

8. SUBMISSION SCHEDULE

**First Submission:** The Contractor must provide a draft Supplementary Provisioning Technical Documentation for review by Canada at the same time as the draft Provisioning Parts Breakdown submission.

**Response Time:** Comments on the draft Supplementary Provisioning Technical Documentation will be provided by Canada no later than 28 calendar days after receipt of the soft copy submission.

The Contractor must revise the draft Supplementary Provisioning Technical Documentation, addressing Canada's comments, and bring the revised Supplementary Provisioning Technical Documentation to the Initial Provisioning Conference.

**Subsequent Submission(s)** The Contractor must provide a revised Supplementary Provisioning Technical Documentation, addressing Canada's comments and changes resulting from decisions taken during the Initial Provisioning Conference, for review and possible acceptance no later than 21 calendar days from the end date of the Initial Provisioning Conference.

**Response Time:** Comments or acceptance of the revised Supplementary Provisioning Technical Documentation will be provided by Canada no later than 14 calendar days after receipt of the soft copy submission.

9. DISTRIBUTION and ADDRESSEES

| A. ADDRESSEE | B. COPIES | | | |
|---|---|---|---|---|
| | DRAFT | | FINAL | |
| | Hard Copy | Soft Copy | Hard Copy | Soft Copy |
| DND ILSM | | 1 | 1 | 1 |
| | | | | |
| | | | | |
| | | | | |
| | | | | |
| | | | | |

## A2.32 **CDRL – Special Tools and Test Equipment List**

| CONTRACT DATA REQUIREMENTS LIST | | |
|---|---|---|
| 1. SYSTEM / ITEM<br>Water Treatment System | | |
| 2. ITEM NUMBER<br>CDRL WTS-ILS-216 | 3. TITLE OR DESCRIPTION OF DATA<br>Special Tools & Test Equipment List | 4. AUTHORITY (Data Item Number)<br>DID WTS-ILS-216 |
| 5. CONTRACT REFERENCE<br>SOW: **Para. 8.4.3.3.1 (pg. 47)**<br>DID: **App. A3.32 (pg. 208)** | 6. FREQUENCY<br>ONE/R | 7. REQUIRING OFFICE<br>DND ILS Manager |

8. SUBMISSION SCHEDULE

**First Submission:** The Contractor must provide a draft Special Tools and Test Equipment List for review by Canada no later than 49 days following Acceptance Verification.

**Response Time:** Comments on the draft Special Tools and Test Equipment List will be provided by Canada no later than 28 days after receipt of the soft copy submission.

**Subsequent Submission(s):** The Contractor must provide a revised Special Tools and Test Equipment List, addressing Canada's comments, for review and possible acceptance no later than 21 days after receipt of Canada's comments.

**Response Time:** Comments or acceptance of the revised Special Tools and Test Equipment List will be provided by Canada no later than 14 calendar days after receipt of the soft copy submission.

9. DISTRIBUTION and ADDRESSEES

| A. ADDRESSEE | B. COPIES | | | |
|---|---|---|---|---|
| | DRAFT | | FINAL | |
| | Hard Copy | Soft Copy | Hard Copy | Soft Copy |
| DND ILSM | | 1 | | 1 |
| | | | | |
| | | | | |
| | | | | |
| | | | | |
| | | | | |

## A2.33 **CDRL – Equipment Delivery Status Report**

| **CONTRACT DATA REQUIREMENTS LIST** | | | | |
|---|---|---|---|---|
| 1. SYSTEM / ITEM<br>Water Treatment System | | | | |
| 2. ITEM NUMBER<br>CDRL WTS-ILS-217 | 3. TITLE OR DESCRIPTION OF DATA<br>Equipment Delivery Status Report | 4. AUTHORITY (Data Item Number)<br>DID WTS-ILS-217 | | |
| 5. CONTRACT REFERENCE<br>SOW: **Para. 8.4.3.4.1 (pg. 47)**<br>DID: **App. A3.33 (pg. 210)** | 6. FREQUENCY<br>MNTHY | 7. REQUIRING OFFICE<br>DND ILS Manager | | |
| 8. SUBMISSION SCHEDULE<br><br>**First Submission:** The Contractor must provide a Equipment Delivery Status Report (EDSR) for review by Canada no later than thirty (30) calendar days following the beginning of WTS production.<br><br>**Response Time:** Comments on the EDSR will be provided by Canada no later than five (5) business days after receipt of the soft copy submission.<br><br>**Subsequent Submission(s):** The Contractor must provide a revised EDSR, addressing Canada's comments, for review no later than five (5) business days after receipt of Canada's comments. The Contractor must provide updated EDSRs every thirty (30) days until every WTS is delivered to Canada.<br><br>**Response Time:** Comments or acceptance of the revised EDSR will be provided by Canada no later than five (5) business days after receipt of the soft copy submission. | | 9. DISTRIBUTION and ADDRESSEES | | |
| | | A. ADDRESSEE | B. COPIES | |
| | | | Hard Copy | Soft Copy |
| | | DND ILSM | | 1 |
| | | PSPC CA | | 1 |
| | | DND PA | | 1 |
| | | DND TA | | 1 |

## A2.34 **CDRL – Identification Plates – Design Template & Populated Designs**

| CONTRACT DATA REQUIREMENTS LIST | | |
|---|---|---|
| 1. SYSTEM / ITEM<br>Water Treatment System | | |
| 2. ITEM NUMBER<br>CDRL WTS-ILS-218 | 3. TITLE OR DESCRIPTION OF DATA<br>Identification Plates – Design Template & Populated Designs | 4. AUTHORITY (Data Item Number)<br>DID WTS-ILS-218 |
| 5. CONTRACT REFERENCE<br>SOW: **Para. 8.7.1 (pg. 48)**<br>DID: **App. A3.34 (pg.212)** | 6. FREQUENCY<br>ONE/R | 7. REQUIRING OFFICE<br>DND ILS Manager |

8. SUBMISSION SCHEDULE

**First Submission (Design Template):** The Contractor must provide a draft Identification Plates design template for review by Canada no later than 112 days after the Kick off Meeting date.

**Response Time:** Comments on the draft Identification Plates design template will be provided by Canada no later than 35 days after receipt of the hard copy submission.

**Subsequent Submission(s) (Design Template):** The Contractor must provide a revised Identification Plates design template, addressing Canada's comments, for review and possible acceptance no later than 28 days after the receipt of Canada's comments.

**Response Time:** Comments or acceptance of the revised Identification Plates design template will be provided by Canada no later than 21 days after receipt of the hard copy submission.

**First Submission (Populated Designs):** The Contractor must provide all draft populated Identification Plate designs for review by Canada no later than 49 days after the Critical Design Review.

**Response Time:** Comments on the draft populated Identification Plate designs will be provided by Canada no later than 21 days after receipt of the hard copy submission.

**Subsequent Submission(s) (Populated Designs):** The Contractor must provide revised populated Identification Plate designs, addressing Canada's comments, for review and possible acceptance no later than 14 days after the receipt of Canada's comments.

**Response Time:** Comments or acceptance of the revised populated Identification Plate designs will be provided by Canada no later than 14 days after receipt of the hard copy submission.

9. DISTRIBUTION and ADDRESSEES

| A. ADDRESSEE | B. COPIES | | | |
|---|---|---|---|---|
| | DRAFT | | FINAL | |
| | Hard Copy | Soft Copy | Hard Copy | Soft Copy |
| DND ILSM | 1 | 1 | 1 | 1 |
| | | | | |
| | | | | |
| | | | | |
| | | | | |
| | | | | |

## A2.35 **CDRL – Controlled & Non-Controlled Goods List**

| **CONTRACT DATA REQUIREMENTS LIST** | | |
|---|---|---|
| 1. SYSTEM / ITEM<br>Water Treatment System | | |
| 2. ITEM NUMBER<br>CDRL WTS-ILS-219 | 3. TITLE OR DESCRIPTION OF DATA<br>Controlled & Non-Controlled Goods List (CNCGL) | 4. AUTHORITY (Data Item Number)<br>DID WTS-ILS-219 |
| 5. CONTRACT REFERENCE<br>SOW: **Para. 8.8.1 (pg. 48)**<br>DID: **App. A3.35 (pg. 213)** | 6. FREQUENCY<br>ONE/R | 7. REQUIRING OFFICE<br>DND ILS Manager |

8. SUBMISSION SCHEDULE

**First Submission:** The Contractor must provide a draft CNCGL for review by Canada at the same time as the draft Provisioning Parts Breakdown submission.

**Response Time:** Comments on the draft CNCGL will be provided by Canada no later than 21 days after receipt of the soft copy submission.

**Subsequent Submission(s)** The Contractor must provide a revised CNCGL, addressing Canada's comments, for review and possible acceptance no later than 21 days after receipt of Canada's comments.

**Response Time:** Comments or acceptance of the revised CNCGL will be provided by Canada no later than 14 calendar days after receipt of the soft copy submission.

9. DISTRIBUTION and ADDRESSEES

| A. ADDRESSEE | B. COPIES | | | |
|---|---|---|---|---|
| | DRAFT | | FINAL | |
| | Hard Copy | Soft Copy | Hard Copy | Soft Copy |
| DND ILSM | | 1 | 1 | 1 |
| | | | | |
| | | | | |
| | | | | |
| | | | | |
| | | | | |

## A2.36 CDRL – Identification Labels for Storage and Shipment and Packaging Codes

**CONTRACT DATA REQUIREMENTS LIST**

1. SYSTEM / ITEM
Water Treatment System

| 2. ITEM NUMBER | 3. TITLE OR DESCRIPTION OF DATA | 4. AUTHORITY (Data Item Number) |
|---|---|---|
| CDRL WTS-ILS-220 | Identification Labels for Storage and Shipment and Packaging Codes | DID WTS-ILS-220 |

| 5. CONTRACT REFERENCE | 6. FREQUENCY | 7. REQUIRING OFFICE |
|---|---|---|
| SOW: **Para. 8.9.3 (pg. 49)**<br>DID: **App. A3.36 (pg. 215)** | ONE/R | DND ILS Manager |

8. SUBMISSION SCHEDULE

**<u>Identification Labels for Storage and Shipment (ILSS) Template</u>**

**First Submission:**
The Contractor must provide a draft ILSS Template for review by Canada no later than 28 days following the close of the Initial Provisioning Conference.

**Response Time:** Comments on the draft ILSS Template will be provided by Canada no later than 14 calendar days after receipt of the soft copy submission.

**Subsequent Submission(s):** The Contractor must provide a revised ILSS Template, addressing Canada's comments, for review and possible acceptance no later than 14 calendar days after receipt of Canada's comments.

**Response Time:** Comments or acceptance of the ILSS Template will be provided by Canada no later than 14 calendar days after receipt of the soft copy submission.

**<u>Packaging Codes (CF271 forms)</u>**
**First Submission:**
The Contractor must provide draft CF271 forms for review by Canada no later than 28 days after Canada provides to the Contractor the item's NATO Stock Number.

**Response Time:** Comments on the draft CF271 forms will be provided by Canada no later than 21 calendar days after receipt of the <u>soft copy submission</u>.

**Subsequent Submission(s):** The Contractor must provide revised CF271 forms, addressing Canada's comments, for review and possible acceptance no later than 14 calendar days after receipt of Canada's comments.

**Response Time:** Comments or acceptance of the revised CF271 forms will be provided by Canada no later than 14 calendar days after receipt of the <u>soft copy submission</u>.

9. DISTRIBUTION and ADDRESSEES

| A. ADDRESSEE | B. COPIES | | | |
|---|---|---|---|---|
| | DRAFT | | FINAL | |
| | Hard Copy | Soft Copy | Hard Copy | Soft Copy |
| DND ILSM (ILSS Template) | | 1 | | 1 |
| DND ILSM (CF271) | | 1 | | 1 |
| | | | | |
| | | | | |
| | | | | |
| | | | | |

## A2.37 **CDRL – List of Items to be Supported**

| **CONTRACT DATA REQUIREMENTS LIST** | | |
|---|---|---|
| 1. SYSTEM / ITEM<br>Water Treatment System | | |
| 2. ITEM NUMBER<br>CDRL WTS-ILS-221 | 3. TITLE OR DESCRIPTION OF DATA<br>List of Items to be Supported | 4. AUTHORITY (Data Item Number)<br>DID WTS-ILS-221 |
| 5. CONTRACT REFERENCE<br>SOW: **Para. 8.10.1 (pg. 49)**<br>DID: **App. A3.37 (pg. 217)** | 6. FREQUENCY<br>ONE/R | 7. REQUIRING OFFICE<br>DND ILS Manager |

8. SUBMISSION SCHEDULE

**First Submission:** The Contractor must provide a draft List of Items to be Supported for review by Canada no later than 35 days following the final acceptance of the WTS Illustrated Parts Manual, PPB and SPTD.

**Response Time:** Comments on the draft List of Items to be Supported will be provided by Canada no later than 21 days after receipt of the soft copy submission.

**Subsequent Submission(s):** The Contractor must provide a revised List of Items to be Supported, addressing Canada's comments, for review and possible acceptance no later than 21 days after receipt of Canada's comments.

**Response Time:** Comments or acceptance of the revised List of Items to be Supported will be provided by Canada no later than 14 days after receipt of the soft copy submission.

9. DISTRIBUTION and ADDRESSEES

| A. ADDRESSEE | B. COPIES | | | |
|---|---|---|---|---|
| | DRAFT | | FINAL | |
| | Hard Copy | Soft Copy | Hard Copy | Soft Copy |
| DND ILSM | | 1 | | 1 |
| | | | | |
| | | | | |
| | | | | |
| | | | | |
| | | | | |

## A2.38 **CDRL – Warranty Support Plan**

| CONTRACT DATA REQUIREMENTS LIST | | |
|---|---|---|
| 1. SYSTEM / ITEM<br>Water Treatment System | | |
| 2. ITEM NUMBER<br>CDRL WTS-ILS-222 | 3. TITLE OR DESCRIPTION OF DATA<br>Warranty Support Plan | 4. AUTHORITY (Data Item Number)<br>DID WTS-ILS-222 |
| 5. CONTRACT REFERENCE<br>SOW: **Para. 8.12.1 (pg. 50)**<br>DID: **App. A3.38 (pg. 223)** | 6. FREQUENCY<br>ONE/R | 7. REQUIRING OFFICE<br>DND ILS Manager |

8. SUBMISSION SCHEDULE

**First Submission:** The Contractor must provide a draft Warranty Support Plan for review by Canada no later than 84 days following the kick-off meeting.

**Response Time:** Comments on the draft Warranty Support Plan will be provided by Canada no later than 28 days after receipt of the soft copy submission.

**Subsequent Submission(s):** The Contractor must provide a revised Warranty Support Plan, addressing Canada's comments, for review and possible acceptance no later than 28 days after receipt of Canada's comments.

**Response Time:** Comments or acceptance of the revised Warranty Support Plan will be provided by Canada no later than 21 days after receipt of the soft copy submission.

9. DISTRIBUTION and ADDRESSEES

| A. ADDRESSEE | B. COPIES | | | |
|---|---|---|---|---|
| | DRAFT | | FINAL | |
| | Hard Copy | Soft Copy | Hard Copy | Soft Copy |
| DND ILSM | | 1 | 1 | 1 |
| | | | | |
| | | | | |
| | | | | |
| | | | | |
| | | | | |

# A3.0 APPENDIX: DATA ITEM DESCRIPTION

## A3.1 DID Item List

| DID # | Title | CDRL # |
|---|---|---|
| WTS-PM-001 | Project Management Plan | WTS-PM-001 |
| WTS-PM-002 | Contract Master Schedule | WTS-PM-002 |
| WTS-PM-003 | Contract Work Breakdown Structure | WTS-PM-003 |
| WTS-PM-004 | Contract Status Report | WTS-PM-004 |
| WTS-PM-005 | Meeting Agenda | WTS-PM-005 |
| WTS-PM-006 | Meeting Minutes | WTS-PM-006 |
| WTS-SE-101 | Systems Engineering Management Plan (SEMP) | WTS-SE-101 |
| WTS-SE-102 | Mandated System Review Package | WTS-SE-102 |
| WTS-SE-103 | Requirements Traceability Verification Matrix | WTS-SE-103 |
| WTS-SE-104 | Engineering Drawings & Associated Lists | WTS-SE-104 |
| WTS-SE-105 | Engineering Change Proposals | WTS-SE-105 |
| WTS-SE-106 | Configuration Status Accounting Report | WTS-SE-106 |
| WTS-SE-107 | Acceptance Test Plan and Procedures | WTS-SE-107 |
| WTS-SE-108 | Acceptance Test Reports | WTS-SE-108 |
| WTS-ILS-201 | Top Level Assembly Drawing | WTS-ILS-201 |
| WTS-ILS-202 | WTS Operator Manual | WTS-ILS-202 |
| WTS-ILS-203 | WTU Operator Quick Reference Card | WTS-ILS-203 |
| WTS-ILS-204 | WTS Maintenance Manual | WTS-ILS-204 |
| WTS-ILS-205 | WTS Permissive Repair Schedule and Standard Repair Times | WTS-ILS-205 |
| WTS-ILS-206 | WTS Illustrated Parts Manual | WTS-ILS-206 |
| WTS-ILS-207 | WTS Operator Training Package | WTS-ILS-207 |
| WTS-ILS-208 | WTU and ASU Technician Training Package | WTS-ILS-208 |
| WTS-ILS-209 | WTS Preservation, Storage and Reactivation Instructions | WTS-ILS-209 |
| WTS-ILS-210 | WTS Stowage, Shipping, and Handling Instructions | WTS-ILS-210 |
| WTS-ILS-211 | WTS Data Summary | WTS-ILS-211 |
| WTS-ILS-212 | MEU, ASU and WSU Stowage Maps | WTS-ILS-212 |
| WTS-ILS-213 | WTU Process and Flow Diagrams | WTS-ILS-213 |
| WTS-ILS-214 | Provisioning Parts Breakdown | WTS-ILS-214 |
| WTS-ILS-215 | Supplementary Provisioning Technical Documentation | WTS-ILS-215 |
| WTS-ILS-216 | Special Tools and Test Equipment | WTS-ILS-216 |
| WTS-ILS-217 | Identification Plates | WTS-ILS-217 |
| WTS-ILS-218 | Controlled & Non-Controlled Goods List | WTS-ILS-218 |

| | | |
|---|---|---|
| WTS-ILS-219 | Identification Labels for Storage and Shipment and Packaging Codes | WTS-ILS-219 |
| WTS-ILS-220 | List of Items to be Supported | WTS-ILS-220 |
| WTS-ILS-221 | Warranty Support Plan | WTS-ILS-221 |

## A3.2 DID Table Definitions

The following section defines the various blocks of information found on the Data Item Description (DID) forms:

**BLOCK 1 – TITLE**
The title of the data item for the DID.

**BLOCK 2 - IDENTIFICATION NUMBER**
The Data Item Description (DID) number, consisting of a sequential three-digit number and prefixed with an abbreviation code, to uniquely identify the DID. Note that the 001-099 series is reserved to Project Management (PM) DIDs, the 101-199 series is reserved to Systems Engineering (SE) DIDs and the 201-299 series is reserved to Integrated Logistics Support (ILS) DIDs. The abbreviation codes used for the prefix are:

"PM" for Project Management
"SE" for Systems Engineering
"ILS" for Integrated Logistics Support

**BLOCK 3 - DESCRIPTION**
Provides a general description of the data content requirements.

**BLOCK 4 – RELATED DOCUMENT(S)**
Provides a listing of the related documents and specifications associated with and required to produce this DID.

**BLOCK 5 - CONTRACT REFERENCE**
The specific paragraph numbers from the Contract Statement of Work and CDRL to assist in identifying the work effort associated with the data item.

**BLOCK 6 - PREPARATION INSTRUCTIONS**
Provides the preparation instructions for the content and format requirements for the DID.

## A3.3 DID – Project Management Plan

| DATA ITEM DESCRIPTION | |
|---|---|
| 1. TITLE<br>**Project Management Plan (PMP)** | 2. IDENTIFICATION NUMBER<br>DID WTS-PM-001 |
| 3. DESCRIPTION<br>The Project Management Plan (PMP) is the top-level plan that describes the Contractor's strategy, plans, methodologies and processes for meeting the requirements of the Contract. | |
| 4. RELATED DOCUMENTS | 5. CONTRACT REFERENCE<br>SOW: **Para. 3.2.1 (pg. 16)**<br>CDRL: **App. A2.3 (pg. 107)** |

6. PREPARATION INSTRUCTIONS

6.1. **CONTENT**

6.1.1. The PMP must describe the management processes, administrative procedures and organizational structure that will be used to manage the work of the Contractor.

6.1.2. The PMP must further detail the practices and procedures for project scheduling, planning, organizing, directing, executing, communicating, reporting, managing risk, managing environmental health and safety issues and impacts, managing information, and closing of action items for all Work required by the Contract.

6.1.3. The PMP must address in detail the above points through the following:

6.1.3.1. Overview:

6.1.3.1.1. Purpose, Background, Scope and Objectives;

6.1.3.1.2. Assumptions, Constraints and Risks;

6.1.3.1.3. All Project Deliverables;

6.1.3.1.4. Organization Summary; and

6.1.3.1.5. Schedule Summary.

6.1.3.2. Organization:

6.1.3.2.1. Project Management Organizational Chart, consisting of internal and external organizations as it pertains to this Contract;

6.1.3.3. Management Processes:

6.1.3.3.1. Project Management Approach and Procedures;

6.1.3.3.2. Schedule Control;

6.1.3.3.3. Quality Assurance;

6.1.3.3.4. Reporting;

6.1.3.3.5. Communications;

6.1.3.3.6. Risk Management (RM);

6.1.3.3.7. Environmental, Health and Safety Issues Management;

6.1.3.3.8. Information Management (IM); and

6.1.3.3.9. Change Control Processes.

6.2. **SOFT COPY FORMAT**

6.2.1. The PMP must be submitted as a PDF file type.

6.2.2. **Soft Copy format submission size below 7MB** – The PMP PDF may be submitted via email as follows:

6.2.2.1. To Field: As per the related CDRL section 9.A. Addressee, as identified in the contract.

6.2.2.2. Subject Field: WTS-PM-001 – PMP – [Rev #] – [Date of Issue]

6.2.3. **Soft Copy format submission size at or above 7MB** - The PMP PDF must be submitted on CD or DVD media and be labelled as follows:

6.2.3.1. Water Treatment System

6.2.3.2. PMP;

6.2.3.3. WTS-PM-001;

6.2.3.4. The Revision number, and

6.2.3.5. The date of issue.

## A3.4 DID – Contract Master Schedule

| DATA ITEM DESCRIPTION | |
|---|---|
| 1. TITLE<br>**Contract Master Schedule (CMS)** | 2. IDENTIFICATION NUMBER<br>DID WTS-PM-002 |
| 3. DESCRIPTION<br>The CMS describes the Contractor's planned sequence of activities, milestones and decision points to enable the objectives of the Contract to be met. Additionally, the CMS defines the current Contract schedule status, comparing the current schedule to the contracted schedule. The CMS also compares the current schedule status with any applicable baseline schedule. | |
| 4. RELATED DOCUMENTS<br>The CMS inter-relates with the following data items:<br>• Project Management Plan (PMP); and<br>• Contract Work Breakdown Structure (CWBS). | 5. CONTRACT REFERENCE<br>SOW: **Para. 3.3.1 (pg. 16)**<br>CDRL: **App. A2.4 (pg. 108)** |

6. PREPARATION INSTRUCTIONS

6.1. **CONTENT**

6.1.1. **Data to be Included**

6.1.1.1. The CMS must graphically depict the contract schedule and progress at the activity level.

6.1.1.2. The CMS must graphically present or otherwise identify:

6.1.1.2.1. activities and their estimated durations;

6.1.1.2.2. milestones, including milestones in the contract;

6.1.1.2.3. the relationships and dependencies between activities and milestones to be accomplished by or for the Contractor in the performance of its obligations under the contract;

6.1.1.2.4. earliest and latest start and finish dates for all activities and milestones;

6.1.1.2.5. critical and non-critical paths;

6.1.1.2.6. floats available on all activities and milestones;

6.1.1.2.7. allocated resources for each activity; and

6.1.1.2.8. notes on the use of the CMS, including a glossary of terms and symbols used.

6.1.1.3. The CMS must include:

6.1.1.3.1. all other schedules required under the contract (eg, the Systems Engineering schedule);

6.1.1.3.2. Subcontractor schedules, to a level of detail that is consistent with the level of detail for the Contractor's own schedule;

6.1.1.3.3. other major events, as agreed between the Contractor and DND;

6.1.1.3.4. DND tasks, where such tasks interface with, and may affect, Contractor tasks; and

6.1.1.3.5. significant reviews, such as Mandated System Reviews.

6.1.2. **Integration with Other Management Information**

6.1.2.1. The CMS must be traceable to the CWBS and to milestones in the contract.

6.1.3. **Narrative Analysis**

6.1.3.1. Each submission of the CMS must contain an explanation of the cause of each milestone's rescheduled forecast date that is later than the milestone's current approved scheduled baseline date for the issue of the CMS in which the rescheduled forecast date was first reported.

6.1.3.2. Subsequent issues of the CMS need only address changes from previously reported dates. The narrative analysis for the CMS must address possible impact on other milestones and activities, and must describe work-around plans to minimise the impact

6.2. **SOFT COPY FORMAT**

6.2.1. The CMS must be the primary schedule for the contract, and all other schedules must be subordinate to the CMS.

6.2.2. The CMS must be submitted as a PDF file type.

6.2.3. The CMS must be displayed in a variety of formats, including:

6.2.3.1. a Gantt chart;

6.2.3.2. a list of all tasks, together with their planned and actual start and completion dates; and

6.2.3.3. a listing of milestones (including Milestones in the contract), together with their original, rescheduled, forecast and actual completion dates.

6.2.4. **Soft Copy format submission size below 7MB** – The CMS PDF may be submitted via email as follows:

6.2.4.1. To Field: As per the related CDRL section 9.A. Addressee, as identified in the contract.

6.2.4.2. Subject Field: WTS-PM-002 – CMS – [Rev #] – [Date of Issue]

6.2.5. **Soft Copy format submission size at or above 7MB** - The CMS PDF must be submitted on CD or DVD media and be labelled as follows:

6.2.5.1. Water Treatment System

6.2.5.2. CMS;

6.2.5.3. WTS-PM-002;

6.2.5.4. The Revision number, and

6.2.5.5. The date of issue.

## A3.5 DID – Contract Work Breakdown Structure

| DATA ITEM DESCRIPTION | |
|---|---|
| 1. TITLE<br>**Contract Work Breakdown Structure (CWBS)** | 2. IDENTIFICATION NUMBER<br>DID WTS-PM-003 |
| 3. DESCRIPTION<br>The CWBS forms the framework for Contract planning, management and status reporting and for estimating costs, schedule, resource requirements and technical achievements at completion. | |
| 4. RELATED DOCUMENTS<br>The CWBS is related to, and must be consistent with, the CMS. | 5. CONTRACT REFERENCE<br>SOW: **Para. 3.4.1 (pg. 16)**<br>CDRL: **App. A2.5 (pg. 109)** |

6. PREPARATION INSTRUCTIONS

6.1. **CONTENT**

6.1.1. The CWBS must include a Work Breakdown Structure (WBS) index, a WBS graphic, and a WBS dictionary.

6.1.2. **WBS Index**

6.1.2.1. The CWBS must include a WBS index delivered in a tool that has an Outline Mode (specifically Microsoft Word), such that it can be reviewed at any level of expansion.

6.1.2.2. The WBS index must be derived from the WBS dictionary and each record in the WBS index must include:

6.1.2.2.1. WBS element number;

6.1.2.2.2. WBS element title;

6.1.2.2.3. WBS element revision date and revision number;

6.1.2.2.4. Task agency; and

6.1.2.2.5. Cross references to the conditions of contract and Statement of Work.

6.1.3. **WBS Graphic**

6.1.3.1. The CWBS must include a WBS graphic, which contains the same information as the WBS index, but shown in a graphical form, usually a tree structure.

6.2. **SOFT COPY FORMAT**

6.2.1. The CWBS must be submitted as a Microsoft Word file type.

6.2.2. **Soft Copy format submission size below 7MB** – The CWBS Microsoft Word file may be submitted via email as follows:

6.2.2.1. To Field: As per the related CDRL section 9.A. Addressee, as identified in the contract.

6.2.2.2. Subject Field: WTS-PM-003 – CWBS – [Rev #] – [Date of Issue]

6.2.3. **Soft Copy format submission size at or above 7MB** - The CWBS Microsoft Word file must be submitted on CD or DVD media and be labelled as follows:

6.2.3.1. Water Treatment System

6.2.3.2. CWBS;

6.2.3.3. WTS-PM-003;

6.2.3.4. The Revision number, and

6.2.3.5. The date of issue.

## A3.6 DID – Contract Status Report

| DATA ITEM DESCRIPTION | |
|---|---|
| 1. TITLE<br>**Contract Status Report (CSR)** | 2. IDENTIFICATION NUMBER<br>DID WTS-PM-004 |
| 3. DESCRIPTION<br>The Contract Status Report (CSR) is the principal statement and explanation of the status of the contract at the end of each reporting period. | |
| 4. RELATED DOCUMENTS | 5. CONTRACT REFERENCE<br>SOW: **Para. 3.5.1 (pg. 17)**<br>CDRL: **App. A2.6 (pg. 110)** |

6. PREPARATION INSTRUCTIONS

6.1. **CONTENT**

6.1.1. The CSR must identify the date at which the CSR is valid, and the time period since the status date of the previous CSR (the 'reporting period').

6.1.2. The CSR must include the following information:

6.1.2.1. A summary of significant work activities (including those undertaken by major Subcontractors) undertaken during the reporting period;

6.1.2.2. A summary of significant work activities (including those undertaken by major Subcontractors) expected to be undertaken in the next reporting period.

6.1.2.3. A summary of progress (including progress by major Subcontractors) against the CMS.

6.1.2.4. A narrative detailing progress against milestones, expected date of completion of near milestones, problem areas and work-around plans where required;

6.1.2.5. A status report on contract data deliverable end items as called up in the CDRLs;

6.1.2.6. An engineering report, giving the status of engineering activity;

6.1.2.7. An Integrated Logistic Support (ILS) report, giving the status of ILS activity;

6.1.2.8. A list of correspondence that requires a response from the DND/PSPC, but for which no response has been received; and

6.1.2.9. A list of DND/PSPC correspondence to the Contractor for which a response is outstanding, and an estimate of the response date.

6.1.3. **Risk Register**

6.1.3.1. The CSR must include a Risk Register that reflects the current status of risk for the contract;

6.1.3.2. The Risk Register information provided must include:

6.1.3.2.1. Identification of each risk (sequence number, name and description);

6.1.3.2.2. Its likelihood and potential severity;

6.1.3.2.3. Who is assigned to manage the risk;

6.1.3.2.4. The planned risk response should the event occur; and

6.1.3.2.5. The risk mitigation (actions taken in advance to reduce probability/impact.

6.1.3.2.6. Once individual identified risks have been resolved, they can be removed from the active Risk Register.

6.1.4. **Configuration Change Register**

6.1.4.1. The CSR must include a Configuration Change Register (CCR), which records all activities relating to Contract Change Proposals (CCP), Engineering Change Proposals (ECPs) and Deviations during the reporting period. The first section of the CCR must contain active items, and the second section must contain brief details of closed and completed items.

6.1.4.2. The active items section of the CCR must include information such as reference number, title, abstract, date raised, date approved, affected section of the contract, responsible party, cost/savings involved, date of last action, status at last action, target date for completion of next action, target status at completion of next action, and target date for completion of the CCP, ECP, or Deviation.

6.1.4.3. The closed and completed section of the CCR must include information such as reference number, title, abstract, affected section of the contract, cost/savings involved, and closure/completion date.

6.2. **SOFT COPY FORMAT**

6.2.1. The CSR must be submitted as a PDF file type.

6.2.2. The CSR PDF must be submitted via email (submission size not to exceed 7MB) as follows:

6.2.2.1. To Field: As per the related CDRL section 9.A. Addressee, as identified in the contract.

6.2.2.2. Subject Field: WTS-PM-004 – CSR – [Rev #] – [Date of Issue]

## A3.7 DID – Meeting Agenda

| DATA ITEM DESCRIPTION | |
|---|---|
| 1. TITLE<br>**Meeting Agenda** | 2. IDENTIFICATION NUMBER<br>DID WTS-PM-005 |
| 3. DESCRIPTION<br>The Meeting Agenda contains the venue information and identifies the discussion items to be covered at meetings. | |
| 4. RELATED DOCUMENTS | 5. CONTRACT REFERENCE<br>SOW: **Para. 3.6.6.1.1 (pg. 18)**<br>CDRL: **App. A2.7 (pg. 111)** |

6. PREPARATION INSTRUCTIONS

6.1. **CONTENT**

6.1.1. The Meeting Agenda must set forth the venue, identify all requirements and list the discussion items to be covered at the meeting.

6.1.2. Venue. The Meeting Agenda must address the venue as follows:

6.1.2.1. Meeting Identification Number;

6.1.2.2. Purpose;

6.1.2.3. Date, time and location; and

6.1.2.4. Attendees.

6.1.3. Discussion items. The Meeting Agenda must address the discussion items through the following sections:

6.1.3.1. Opening Remarks;

6.1.3.2. Agenda Review;

6.1.3.3. Review of Previous Minutes;

6.1.3.4. Opened Discussion Items;

6.1.3.5. New Discussion Items;

6.1.3.6. Review of Action Items;

6.1.3.7. Next Venue; and

6.1.3.8. Closing Remarks.

6.2. **HARD COPY FORMAT**

6.2.1. The Meeting Agenda must be printed on paper with these characteristics:

6.2.1.1. Weight of no less than 90 gsm;

6.2.1.2. Brightness of no less than 92 ISO brightness;

6.3. **SOFT COPY FORMAT**

6.3.1. The Meeting Agenda must be submitted as a MS Word file type.

6.3.2. The Meeting Agenda MS Word document must be submitted via email (submission size not to exceed 7MB) as follows:

6.3.2.1. To Field: As per the related CDRL section 9.A. Addressee, as identified in the contract.

6.3.2.2. Subject Field: WTS-PM-005 – Meeting Agenda – [Rev #] – [Date of Issue]

## A3.8 DID – Meeting Minutes

| DATA ITEM DESCRIPTION | |
|---|---|
| 1. TITLE<br>**Meeting Minutes** | 2. IDENTIFICATION NUMBER<br>DID WTS-PM-006 |
| 3. DESCRIPTION<br>The Meeting Minutes contains the detailed records of proceedings, discussions, decisions and action items from meetings. | |
| 4. RELATED DOCUMENTS | 5. CONTRACT REFERENCE<br>SOW: **Para. 3.6.6.1.2 (pg. 18)**<br>CDRL: **App. A2.8 (pg. 112)** |

6. PREPARATION INSTRUCTIONS

6.1. **CONTENT**

6.1.1. The Meeting Minutes must contain the detailed records of proceedings, discussions, decisions and action items from the meeting and be presented through the following sections:

6.1.1.1. General – consisting of meeting identification number, purpose, date, time and location;

6.1.1.2. Attendees, consisting of the organization each person represents, and the identification of the Chairperson(s);

6.1.1.3. Opening Remarks;

6.1.1.4. **Action Item Report** - used to monitor issues, assign responsibility, direct action and track status, history, and progress, and must consisting of:

6.1.1.4.1. Item #; date initiated; required action; assigned actionee; target completion date; cross-reference to all related action items.

6.1.1.4.2. Action Item Report must be **updated** with each meeting and must consisting of:

6.1.1.4.2.1. Action Item current status and the actual date completed;

6.1.1.5. Next Venue;

6.1.1.6. Closing Remarks;

6.2. **SOFT COPY FORMAT**

6.2.1. The Meeting Minutes must be submitted as a PDF file type.

6.2.2. The Meeting Minutes PDF must be submitted via email (submission size not to exceed 7MB) as follows:

6.2.2.1. To Field: As per the related CDRL section 9.A. Addressee, as identified in the contract.

6.2.2.2. Subject Field: WTS-PM-006 – Meeting Minutes – [Rev #] – [Date of Issue]

## A3.9 DID – Systems Engineering Management Plan

| DATA ITEM DESCRIPTION | |
|---|---|
| 1. TITLE<br>**Systems Engineering Management Plan (SEMP)** | 2. IDENTIFICATION NUMBER<br>DID WTS-SE-101 |
| 3. DESCRIPTION<br>The SEMP describes the Contractor's strategy, plans, methodologies and processes for the management of a fully integrated engineering program IAW the contract. The SEMP describes the relationships between concurrent activities as well as between sequential activities to demonstrate that a fully integrated engineering program has been achieved. | |
| 4. RELATED DOCUMENTS<br>**IEEE 15288.1**, *IEEE Standard for Application of Systems Engineering on Defense Programs*<br>**IEEE 15288.2**, *IEEE Standard for Technical Reviews and Audits on Defense Programs*<br>**ANSI/EIA-649-C**, *Configuration Management Standard* | 5. CONTRACT REFERENCE<br>SOW: **Para. 4.2.2.1 (pg. 19)**<br>CDRL: **App. A2.9 (pg. 113)** |

6. PREPARATION INSTRUCTIONS

6.1. **CONTENT**

6.1.1. **Engineering Management**

6.1.1.1. The SEMP must define the engineering organisation for the contract, including the key engineering positions, and the partitioning of engineering effort between the various Contractor and Subcontractor organisations.

6.1.1.2. The SEMP must describe how technical effort will be coordinated to meet cost, schedule, and performance objectives.

6.1.1.3. The SEMP must summarise planned personnel needs, applicable to the various phases of the contract, by discipline and level of expertise.

6.1.1.4. The SEMP must identify the standards (eg, IEEE 15288 and ANSI/EIA-649-C) to be utilised by the Contractor and Subcontractors to undertake the Systems Engineering, software, Configuration Management (CM) and Verification activities, including the proposed tailoring of those standards to meet requirements of the contract.

6.1.1.5. The SEMP Management/Organization portion must describe the Contractor's systems engineering organization, responsibilities, terms of reference, internal operating relationships within the company, external operating relationships with subcontractors, management relationships, management procedures and supporting and tracking system.

6.1.2. **Systems Engineering Process**

6.1.2.1. The SEMP must define the tailored application of the Contractor's Systems Engineering process to the activities of the contract, including:

6.1.2.1.1. the major products and/or increments to be delivered;

6.1.2.1.2. the major outcomes to be achieved;

6.1.2.1.3. the major Systems Engineering tools that will be used for the Contract;

6.1.2.1.4. the methods for documentation and control of engineering and technical information, including expected specifications and Configuration Baselines;

6.1.2.1.5. the methods and tools for analysis and validation of system requirements;

6.1.2.1.6. the required implementation tasks, including the integration and assembly of the system; and

6.1.2.1.7. the approach, methods, procedures, and tools to be used for systems analysis and control, including establishing and maintaining requirements traceability.

6.1.3. **Technical Risk Management**

6.1.3.1. The SEMP must describe the risk-management strategies associated with any global, engineering-related risks.

6.1.4. **Software Development and Management**

6.1.4.1. The SEMP must define the tailored application of the Contractor's software processes to the activities of the Contract, including:

6.1.4.1.1. the management of software development activities undertaken by Subcontractors; and

6.1.4.1.2. the development of software being undertaken by the Contractor.

6.1.5. **System Reviews**

6.1.5.1. The SEMP must describe the approach planned to establish and conduct all System Reviews (i.e. Mandated System Reviews and Internal System Reviews) required under the contract.

6.1.5.2. The SEMP must describe, for each engineering related System Review, the relationship between the System Review and other engineering program activities.

6.1.5.3. Based on the SOW requirements for System Reviews and the Contractor's internal processes, the SEMP must detail the following information for each of the engineering related System Reviews:

6.1.5.3.1. organisations and individuals involved in the review and their specific review responsibilities;

6.1.5.3.2. proposed review venue;

6.1.5.3.3. review objectives;

6.1.5.3.4. pre-requisites for the conduct of the review (i.e. entry criteria);

6.1.5.3.5. actions to be addressed during the System Review, including the documentation to be reviewed;

6.1.5.3.6. essential review completion criteria (i.e. exit criteria); and

6.1.5.3.7. applicable Milestone criteria specified in the contract.

6.1.6. **Growth, Evolution and Obsolescence**

6.1.6.1. The SEMP must, for the Contractor's growth, evolution and Obsolescence program:

6.1.6.1.1. describe the technical measures and methods to be used to identify and assess candidate elements, including hardware and software items, and the primary candidate elements to be addressed under by program;

6.1.6.1.2. describe the application of design aspects (e.g. modularity and 'open architectures') to improve system growth, facilitate evolution, and to counter Obsolescence;

6.1.6.1.3. identify the steps to be undertaken during the acquisition phase to balance technological maturity and Obsolescence risks, and solutions to minimise the complexity (and cost) of through-life upgrades; and

6.1.6.1.4. identify the steps to be undertaken during the support phase to maintain effective and supportable equipment configurations and the expected need for upgrades.

6.1.7. **Human Engineering**

6.1.7.1. The SEMP must, for the Contractor's Human Engineering program:

6.1.7.1.1. identify the standards to be used, and that have been used for COTS / MOTS items, and describe the application of those standards to meet the Human Engineering requirements of the system;

6.1.7.1.2. the activities, including system functional requirements analysis, equipment design and procedures development activities, to be undertaken in order to meet the Human Engineering required under the contract; and

6.1.7.1.3. the Verification methods to be applied for the Human Engineering program.

6.1.8. **Configuration Management**

6.1.8.1. The SEMP must describe the Contractor's CM methodology, processes and activities for meeting the CM requirements of the contract, including:

6.1.8.1.1. the approach planned to establish and maintain Configuration Control and audit of identified system products and processes;

6.1.8.1.2. the requirements for establishing Configuration Baselines and the documentation to be used to define each baseline; and

6.1.8.1.3. the approach planned to establish and maintain control of external and internal interfaces.

6.1.8.2. Configuration Identification

6.1.8.2.1. Selection of Configuration Items

6.1.8.2.1.1. The SEMP must define the procedures for the selection of CIs, and detail the criteria used for their selection. The SEMP must, by inclusion or reference, define the list of CIs and their respective specifications and other defining top-level documentation.

6.1.8.2.2. Configuration Baselines

6.1.8.2.2.1. The SEMP must define the requirements for establishing Configuration Baselines, and include:

6.1.8.2.2.1.1. the procedures for the establishment of, at least, the Functional, Allocated and Product Baselines; and

6.1.8.2.2.1.2. the documentation to be used to define each Configuration Baseline.

6.1.8.2.3. Engineering Release

6.1.8.2.3.1. The SEMP must define the procedures for issuing approved configuration documentation, and amendments to this documentation, to functional activities (e.g. manufacturing, logistics, and acquisition) within the Contractor's organisation.

6.1.8.2.4. Configuration Control

6.1.8.2.4.1. The SEMP must define the procedures, including DND involvement, and associated documentation for processing the following:

6.1.8.2.4.1.1. classification of changes, and the level of authority for change approval / concurrence;

6.1.8.2.4.1.2. Contractual change requests;

6.1.8.2.4.1.3. Major Changes;

6.1.8.2.4.1.4. Minor Changes;

6.1.8.2.4.1.5. requests for Deviations/Waivers; and

6.1.8.2.4.1.6. Specification Change Notices.

6.1.8.3. Configuration Status Accounting (CSA)

6.1.8.3.1. The SEMP must define the procedures for CSA, including:

6.1.8.3.1.1. methods for collecting, recording, processing and maintaining the data required to provide the status of accounting information through reports on the CSA database.

6.1.8.3.1.2. a complete description of the CSA database with respect to the areas related to:

6.1.8.3.1.2.1. the identification of the currently approved configuration documentation and configuration identifiers associated with each CI;

6.1.8.3.1.2.2. the status of proposed engineering changes from initiation to implementation;

6.1.8.3.1.2.3. the results of configuration audits, and the status and disposition of discrepancies;

6.1.8.3.1.2.4. the status of requests for deviations;

6.1.8.3.1.2.5. the ability to trace changes from the baseline documentation of each CI; and

6.1.8.3.1.2.6. the effectiveness and installation status of configuration changes to all Cis.

6.1.8.4. Configuration Audits

6.1.8.4.1. The SEMP must:

6.1.8.4.1.1. describe the Contractor's methodology and processes to establish and conduct Physical Configuration Audits (PCAs);

6.1.8.4.1.2. describe the plans, procedures, documentation, and schedules for the audits; and

6.1.8.4.1.3. describe the format for reporting results of in-process audits.

6.1.8.5. Subcontractor Control

6.1.8.5.1. The SEMP must define the methods used to ensure that Subcontractors comply with the Configuration Management requirements of the contract.

6.1.9. **Verification**

6.1.9.1. The SEMP must, for the Contractor's Verification program:

6.1.9.1.1. describe the overall Verification program objectives, activities and schedule;

6.1.9.1.2. describe the use of the RTVM and the extent to which previous Verification results are proposed to be used for Acceptance Verification purposes;

6.1.9.1.3. describe the process for recording Failure reporting and analysis, and the approach to regression testing; and

6.1.9.1.4. identify the requirements for DND Personnel and other resources in order to conduct the Verification program.

6.1.9.2. Verification Activities

6.1.9.2.1. The SEMP must describe the verification activities to be conducted to demonstrate that the system offered for acceptance complies with the requirements of the contract.

6.1.9.2.2. The SEMP must describe all test activities to be included in the verification of the system.

6.1.9.2.3. The SEMP must detail requirements and procedures for the DND provision of resources for, and involvement in, or witnessing of, verification activities.

6.1.9.2.4. Where the Contractor proposes to claim previous verification results as precluding the need for specific verification activities within the Verification program, the SEMP must summarise:

6.1.9.2.4.1. the scope and context of the previous verification activities;

6.1.9.2.4.2. the reasons why the previous results preclude the need for specific verification activities including how the previous results are valid for the configuration of the system, and the intended operational role and environment; and

6.1.9.2.4.3. how the previous verification results will be integrated into the planned verification activities and the RTVM.

6.1.9.3. Flow Diagram

6.1.9.3.1. The SEMP must include an overall flow diagram of the verification program for the system, this flow must be sequentially arranged to include:

6.1.9.3.1.1. all significant verification milestones and efforts in the development phase associated with each class of verification;

6.1.9.3.1.2. hardware and software integration schedules;

6.1.9.3.1.3. requirements for concurrency of verification activities;

6.1.9.3.1.4. the Contractor/Subcontractor or group responsible for each verification event; and

6.1.9.3.1.5. any additional information that clarifies the description of the test program.

6.1.9.3.2. The flow diagram must reflect predicted dates for significant milestones.

6.1.9.4. Verification Objectives

6.1.9.4.1. The SEMP must specify the broad objective for each verification phase for the system, and objectives must be specified in terms of verifying part or all of system or lower level specifications (e.g. subsystem specifications).

6.1.9.5. Test Readiness Reviews

6.1.9.5.1. The SEMP must outline the procedures for conducting Test Readiness Reviews (TRRs).

6.1.9.6. Failure and Corrective Action Management

6.1.9.6.1. The SEMP must describe the Problem Resolution System used for the collection of Failure data for the system and must identify when it will be established.

6.1.9.6.2. The SEMP must identify the process used to analyse failures and track the corrective action taken as a result of a failure, and the interaction with the engineering development groups, logistic organisation, Subcontractors and the DND.

6.1.9.6.3. The SEMP must identify how regression testing for the system will be managed following test failure or design change throughout the Verification program.

6.2. **SOFT COPY FORMAT**

6.2.1. The SEMP must be submitted as a PDF file type.

6.2.2. **Soft Copy format submission size below 7MB** – The SEMP PDF may be submitted via email as follows:

6.2.2.1. To Field: As per the related CDRL section 9.A. Addressee, as identified in the contract.

6.2.2.2. Subject Field: WTS-SE-101– SEMP – [Rev #] – [Date of Issue]

6.2.3. **Soft Copy format submission size at or above 7MB** - The SEMP PDF must be submitted on CD or DVD media and be labelled as follows:

6.2.3.1. Water Treatment System;

6.2.3.2. SEMP;

6.2.3.3. WTS-SE-101;

6.2.3.4. The Revision number, and

6.2.3.5. The date of issue.

## A3.10 DID – Mandated System Review Package

| DATA ITEM DESCRIPTION | |
|---|---|
| 1. TITLE<br>**Mandated System Review Package (MSR) Package** | 2. IDENTIFICATION NUMBER<br>DID WTS-SE-102 |
| 3. DESCRIPTION<br>The purpose of MSR Package is to allow the Contractor and DND Representatives to prepare for MSRs in order to gain maximum value from the reviews. | |
| 4. RELATED DOCUMENTS | 5. CONTRACT REFERENCE<br>SOW: **Para. 4.2.4.4 (pg. 20)**<br>CDRL: **App. A2.10 (pg. 114)** |

6. PREPARATION INSTRUCTIONS

6.1. **CONTENT**

6.1.1. The MSR Package must include information to be reviewed and discussed at the specific MSR, including:

6.1.1.1. documentation that is necessary to show that the objectives of the MSR have been satisfied;

6.1.1.2. presentation material on the topics of discussion as described in the SOW;

6.1.1.3. all relevant documents not previously delivered and needed to meet the objectives and entry criteria of the MSR;

6.1.1.4. where applicable to the MSR, status of technical performance measures against expectations; and

6.1.1.5. where applicable to the MSR, current configuration status along with any identified discrepancies in Configuration Baselines.

6.2. **SOFT COPY FORMAT**

6.2.1. The MSR Package must be submitted as a PDF file type.

6.2.2. **Soft Copy format submission size below 7MB** – The MSR Package PDF may be submitted via email as follows:

6.2.2.1. To Field: As per the related CDRL section 9.A. Addressee, as identified in the contract.

6.2.2.2. Subject Field: WTS-SE-102– MSR Package – [Rev #] – [Date of Issue]

6.2.3. **Soft Copy format submission size at or above 7MB** - The MSR Package PDF must be submitted on CD or DVD media and be labelled as follows:

6.2.3.1. Water Treatment System;

6.2.3.2. MSR Package;

6.2.3.3. WTS-SE-102;

6.2.3.4. The Revision number, and

6.2.3.5. The date of issue.

## A3.11 DID – Requirements Traceability Verification Matrix

| DATA ITEM DESCRIPTION | |
|---|---|
| 1. TITLE<br>**Requirements Traceability Verification Matrix (RTVM)** | 2. IDENTIFICATION NUMBER<br>DID WTS-SE-103 |
| 3. DESCRIPTION<br>The RTVM provides bidirectional traceability from high-level system performance requirements, to the lowest-level requirements. The RTVM shows the traceability and allocation of the requirements contained in the specification tree (i.e. performance specification, detailed specification, subsystem specification, software requirements specification, interface specification and design documentation). The RTVM is also used to verify how each requirement is verified. | |
| 4. RELATED DOCUMENTS<br>Technical Specification at Appendix A1.0 to ANNEX A | 5. CONTRACT REFERENCE<br>SOW: **Para. 4.2.5.1 (pg. 21)**<br>CDRL: **App. A2.11 (pg. 115)** |

6. PREPARATION INSTRUCTIONS

6.1. **CONTENT**

6.1.1. The RTVM must provide backwards and forward traceability through multiple levels of design hierarchy (i.e. the RTVM must document each requirement from its source through analysis, design, testing, and acceptance), to assess the impact of potential specification changes.

6.1.2. The RTVM must include the verification criteria for each requirement for testing purposes.

6.1.3. <u>For the PDR and CDR</u>, the RTVM must contain the following:

6.1.3.1. **Architecture Description Page**: Include a detailed description of the RTVM, show relationships and define all the terms, acronyms used in the RTVM fields.

6.1.3.2. **Unique Identification:** A unique identifier for each requirement;

6.1.3.3. **Requirement Source & Reference:** The paragraph number and requirement statement (or brief summary of the requirement to provide context);

6.1.3.4. **Requirement Allocation**: Enter the specific system, subsystem, hardware item, component, Computer Software Configuration Item, Computer Software Component and Computer Software Unit that each requirement has been allocated. System level requirements must be allocated to all Configuration Items defined for the system.

6.1.3.5. **Form of End Product**: Enter the form and maturity level of the end product used for verification. For example the form can be the system, subsystem, unit level, software configuration Item and the maturity level can be the prototype, first production article, or final configuration item.

6.1.3.6. **Verification Method**: For each requirement, enter the verification method as follows:

6.1.3.6.1. “Certification” – Two forms of Certification are possible: - the first would be from a 3rd party recognized association of technical knowledge and expertise in the applicable area being sought, and the second from an "in house" qualified expert that would certify that the standards are met IAW their own testing or investigation and is attesting to their professional opinion.

6.1.3.6.2. “Analysis” – An element of verification that uses established technical or mathematical models or simulations, algorithms, charts, graphs, circuit diagrams, or other scientific principles and procedures to provide evidence that stated requirements were met.

6.1.3.6.3. “Inspection” – An element of verification that is generally non-destructive and typically includes the use of sight, hearing, smell, touch, and taste; simple physical manipulation; and mechanical and electrical gauging and measurement.

6.1.3.6.4. "Demonstration" – An element of verification that involves the actual operation of an item to provide evidence that the required functions were accomplished under specific scenarios. The items may be instrumented and performance monitored.

6.1.3.6.5. "Test" – An element of verification in which scientific principles and procedures are applied to determine the properties or functional capabilities of items.

6.1.3.7. **Description of Verification:** A brief description of the verification method, intended as a vehicle for early agreement by both parties to define the scope of the verification activities.

6.1.3.8. **Comments:** Enter explanatory notes as required.

6.1.4. For the TRR and after completion of the Acceptance Verification (and ATRs), the RTVM must contain the following:

6.1.4.1. **Verification Document**: Enter the document number, title, and date of the verification document that contains the verification method.

6.1.4.2. **Verification Document Paragraph**: Enter the verification document paragraph number that provides the verification method.

6.1.4.3. **Verification Procedure**: Enter the verification procedure section, and verification procedure step(s) that provides the verification method for each requirement.

6.1.4.4. **Other Tests**: Enter the names of other tests conducted, prior to verification of the requirement, where the requirement is being tested.

6.1.4.5. **Verification Results**: Enter the results of the verification for each requirement. Did system under test conform to the requirement? (Yes, No).

6.1.4.6. **Corrective Actions**: Enter all corrective actions taken and the results of the corrective actions.

6.1.4.7. **Comments**: Enter explanatory notes as required.

6.2. **SOFT COPY FORMAT**

6.2.1. The RTVM must be in an Excel Spreadsheet (MS Office Professional Plus 2013) / electronic relational database (DOORS 9.5 or Access Database (MS Office Professional Plus 2013)) format that can be manipulated to show bidirectional requirements traceability and track the verification of each requirement.

6.2.2. **Soft Copy format submission size below 7MB** – The RTVM may be submitted via email as follows:

6.2.2.1. To Field: As per the related CDRL section 9.A. Addressee, as identified in the contract.

6.2.2.2. Subject Field: WTS-SE-103 – RTVM – [Rev #] – [Date of Issue]

6.2.3. **Soft Copy format submission size at or above 7MB** - The RTVM must be submitted on CD or DVD media and be labelled as follows:

6.2.3.1. Water Treatment System

6.2.3.2. RTVM;

6.2.3.3. WTS-SE-103;

6.2.3.4. The Revision number, and

6.2.3.5. The date of issue.

## A3.12 DID – Engineering Drawings and Associated Lists

| DATA ITEM DESCRIPTION | |
|---|---|
| 1. TITLE<br>**Engineering Drawings and Associated Lists** | 2. IDENTIFICATION NUMBER<br>DID WTS-SE-104 |
| 3. DESCRIPTION<br>The Engineering Drawings and Associated Lists will accurately define the interface to external systems and will enable the system to be maintained and supported over its life. | |
| 4. RELATED DOCUMENTS<br>**APPENDIX A4.0:** *APPENDIX: COMMERCIAL (OEM) ENGINEERING DRAWINGS AND ASSOCIATED LISTS* | 5. CONTRACT REFERENCE<br>SOW: **Para. 4.4.3.1 (pg. 26)**<br>CDRL: **App. A2.12 (pg. 116)** |

6. PREPARATION INSTRUCTIONS

6.1. **CONTENT**

6.1.1. The Engineering Drawings and Associated Lists must be provided IAW the requirements described in Appendix A4.0.

6.2. **SOFT COPY FORMAT**

6.2.1. The Engineering Drawings, Associated Lists, Reference Data, and the associated Metadata must be submitted as soft copy deliverables as described in Appendix A4.0.

6.2.2. **Soft Copy format submission size below 7MB** – The Engineering Drawings and Associated Lists may be submitted via email as follows:

6.2.2.1. To Field: As per the related CDRL section 9.A. Addressee, as identified in the contract.

6.2.2.2. Subject Field: WTS-SE-104 – Engineering Drawings and Associated Lists – [Rev #] – [Date of Issue]

6.2.3. **Soft Copy format submission size at or above 7MB** - The Engineering Drawings and Associated Lists must be submitted on CD or DVD media and be labelled as follows:

6.2.3.1. Water Treatment System

6.2.3.2. Engineering Drawings and Associated Lists;

6.2.3.3. WTS-SE-104;

6.2.3.4. The Revision number, and

6.2.3.5. The date of issue.

## A3.13 **DID – Engineering Change Proposal**

| DATA ITEM DESCRIPTION | |
|---|---|
| 1. TITLE<br>**Engineering Change Proposal (ECP)** | 2. IDENTIFICATION NUMBER<br>DID WTS-SE-105 |
| 3. DESCRIPTION<br>An ECP is a request for authorization to make changes to an approved baseline. An ECP includes the documentation both to describe and to substantiate the engineering change. | |
| 4. RELATED DOCUMENTS<br>**ACMP-2009** – *Guidance on Configuration Management* | 5. CONTRACT REFERENCE<br>SOW: **Para. 5.4.2 (pg. 28)**<br>CDRL: **App. A2.13 (pg. 117)** |

6. PREPARATION INSTRUCTIONS

6.1. **CONTENT**

6.1.1. The following refers to the ECP form following this DID.

6.1.2. **Block 1**. The Contractor must enter the submittal date of the ECP.

6.1.3. **Block 2**. The Contractor must enter the originating organization's name, address and contact information.

6.1.4. **Block 3**. The Contractor must classify the ECP IAW ACMP-2009, and enter the class of ECP as either "Class I" or "Class II".

6.1.5. **Block 4**. The Contractor must use at least one of the following codes to classify the ECP:

6.1.5.1. B – Functional Baseline, Allocated Baseline or Product Baseline changed from established baseline;

6.1.5.2. C – Compatibility with interfacing items;

6.1.5.3. D – Delivered operational or maintenance manuals require change;

6.1.5.4. G – Government Furnished Equipment affected;

6.1.5.5. I – Interchangeability or replaceabililty affected;

6.1.5.6. O – Operational or logistics support change;

6.1.5.7. P – Personnel skills, manning, training or human factors engineering consideration;

6.1.5.8. S – Safety or security; or

6.1.5.9. Z – Contractual item such as cost or schedule.

6.1.6. **Block 5**. The Contractor must recommend the a priority for processing the ECP from the following:

6.1.6.1. E - Emergency. Vital modification required to rectify a condition which may result in a serious hazard to personnel or equipment or may seriously compromise national security. ECP to be actioned within 24 hours.

6.1.6.2. U - Urgent. Urgent modification required to rectify a condition that results in degraded mission effectiveness. ECP to be actioned within 5 days.

6.1.6.3. R - Routine. ECP to be actioned within 30 days.

6.1.7. **Block 6**. The Contractor must describe the ECP with the following:

6.1.7.1. No. A unique number consisting of "ECP-Y-NNN", where:

6.1.7.1.1. Y – C (Contractor) or P (Project Office – DND) indicating ECP originator, and

6.1.7.1.2. NNN - Unique serial number for the ECP;

6.1.7.2. Type – P (Preliminary) or F (Final);

6.1.7.3. Revision – Enter revision indicator to identify version; and

6.1.7.4. SYSTEM DESIGNATION – Identify and describe the system/sub-system affected by the ECP. Include reference to affected configuration identifier(s).

6.1.8. **Block 7.**

6.1.8.1. The Contractor must list all specifications affected by the ECP.

6.1.8.2. The Contractor must list all documents affected by the ECP.

6.1.8.3. The Contractor must submit copes of the affected specifications and documents with the ECP.

6.1.9. **Block 8.**

6.1.9.1. The Contractor must list all drawings affected by the change.

6.1.9.2. The Contractor must submit copes of the affected drawings with the ECP.

6.1.10. **Block 9.** The Contractor must enter a brief title that identifies the ECP.

6.1.11. **Block 10.**

6.1.11.1. The Contractor must describe the engineering change.

6.1.11.2. Supplementary information may be attached to the ECP to describe the proposed change.

6.1.12. **Block 11.**

6.1.12.1. The Contractor must explain the need for the engineering change.

6.1.12.2. The Contractor must explain the benefit to Canada such as enhanced performance, range, reliability or maintainability.

6.1.13. **Block 12.**

6.1.13.1. The Contractor must state the contract number affected by the ECP.

6.1.13.2. The Contractor must identify the contract line item number affected by the proposed engineering change.

6.1.14. **Block 13.**

6.1.14.1. The Contractor must indicate the estimated date when change can be incorporated into production.

6.1.14.2. The Contractor must indicate the planned serial number or lot number upon which the change will be implemented.

6.1.15. **Block 14.**

6.1.15.1. The Contractor must provide the delivery schedule of items incorporating the engineering change.

6.1.15.2. The Contractor must identify if the change is a variance from the current established production and delivery schedule.

6.1.16. **Block 15.**

6.1.16.1. Block 15a. The Contractor must indicate the lot numbers or serial numbers to be retrofitted as a result of the change.

6.1.16.2. Block 15b. The Contractor must enter details of delivery schedule, quantities and locations for completing the retrofit as a result of the change.

6.1.17. **Block 16.** The Contractor must estimate the total cost or savings that results if the ECP is approved.

6.1.18. **Block 17.** The Contractor must identify which configuration items (CI) will change as a result of the ECP's approval.

6.1.19. **Block 18.** The Contractor must indicate which other CI will be affected by the ECP's approval.

6.1.20. **Block 19.** The Contractor must state whether other contractors or Government activities will be affected by the ECP.

6.1.21. **Block 20.**

6.1.21.1. The Contractor must describe the performance change that results if the ECP is approved.

6.1.21.2. The Contractor must describe the impact upon performance specifications, including the defined functional and physical interfaces, which would be affected by the ECP.

6.1.22. **Block 21.** The Contractor must describe other effects, such as the effect upon health and safety, if the ECP is approved.

6.1.23. **Block 22.** The Contractor must describe effects of the proposed change upon performance in quantitative terms as it relates to the defence system and CI specifications.

6.1.24. **Block 23.**

6.1.24.1. The Contractor must print the name of the individual authorized to submit the ECP.

6.1.24.2. The Contractors' authorized individual must sign and date the ECP.

6.1.25. **Block 24.**

6.1.25.1. The Contractor must indicate the effects of the proposed engineering change upon configuration identification and contract reference by checking the corresponding box at 24a through 24e.

6.1.25.2. The Contractor must describe the effects upon the product configuration identification and contract specifications with reference to Specification Change Notices, Notices of Revision (NORs) or other enclosure(s).

6.1.25.3. The Contractor must identify the enclosures and their relevant paragraph numbers within the space adjacent to blocks 24a through 24e.

6.1.26. **Block 25.**

6.1.26.1. The Contractor must indicate the effects of the proposed engineering change upon operational employment by checking the corresponding boxes at blocks 25a through 26j.

6.1.26.2. The Contractor must explain these effects within enclosures.

6.1.26.3. The Contractor must identify the enclosures and their relevant paragraph numbers within the space adjacent to blocks 25a through 25j.

6.1.26.4. The Contractor must use quantitative values when reliability and service life are affected. Survivability includes nuclear survivability.

6.1.27. **Block 26.**

6.1.27.1. The Contractor must indicate the effects of the proposed engineering change upon Integrated Logistics Support (ILS) by checking the corresponding boxes at blocks 26a through 26n.

6.1.27.2. The Contractor must explain these effects within enclosures.

6.1.27.3. The Contractor must identify the enclosures and their relevant paragraph numbers within the space adjacent to blocks 26a through 26n.

6.1.27.4. The Contractor must indicate the method used to determine ILS plans and items required for the support of the new configuration.

6.1.28. **Block 27.**

6.1.28.1. The Contractor must indicate other considerations of the proposed engineering change by checking the boxes at blocks 27a through 27i.

6.1.28.2. The Contractor must explain the effects within enclosures.

6.1.28.3. The Contractor must identify the enclosures and their relevant paragraph numbers within the space adjacent to blocks 27a through 27i.

6.1.29. **Block 28.**

6.1.29.1. The Contractor must summarize the alternative solutions considered such as revisions of operation, maintenance procedures, inspections, servicing requirements or part replacement schedules.

6.1.29.2. The Contractor must provide an analysis of the alternatives, identify the advantages and disadvantages inherent to each alternative.

6.1.29.3. The Contractor must present supporting data with the proposal to authenticate the trade-off analysis if the analysis addresses new concepts or new technology.

6.1.29.4. The Contractor shows the reasons for adopting the alternative proposed by the ECP.

6.1.30. **Block 29.**

6.1.30.1. The Contractor must recommend additional tests, trials, installations, prototypes, fit checks, or other verification that prove the proposed engineering change performs as expected.

6.1.30.2. The Contractor must recommend the test objective, test vehicle(s) and GFE to be used for the verification.

6.1.31. **Block 30.**

6.1.31.1. The Contractor must recommend whether or not to retrofit the engineering change into accepted items.

6.1.31.2. The Contractor must substantiate the retrofit recommendation with data and a brief description of the action required.

6.1.32. **Block 31.** The Contractor must show the work-hours, material costs and subcontract costs to retrofit the defence system.

6.1.33. **Block 32**. The Contractor must show the work-hours required to test the defence system following retrofit.

6.1.34. **Block 33.** The Contractor must state whether to incorporate the proposed change before, after or concurrently with other approved engineering changes.

6.1.35. **Block 34.**

6.1.35.1. The Contractor must indicate whether one or more Contractor field service representatives (FSR) are required for the retrofit.

6.1.35.2. If “yes” to FSR, then the Contractor must attach a proposed program for Contractor participation.

6.1.36. **Block 35.** The Contractor must estimate the total time period a defence system must be removed from operational service for the retrofit.

6.1.37. **Block 36.**

6.1.37.1. The Contractor must summarize the cumulative effect upon performance of this ECP and previously approved ECPs when design limitations are being approached or exceeded.

6.1.37.2. Consequences of ECP disapproval may be stated within Block 36 or within a referenced enclosure.

6.1.38. **Block 37.** The Contractor must request a date for approval by the contracting authority to implement the change.

6.2. **SOFT COPY FORMAT**

6.2.1. The ECP must be submitted as a PDF file type.

6.2.2. The ECP PDF must be submitted via email (submission size not to exceed 7MB) as follows:

6.2.2.1. To Field: As per the related CDRL section 9.A. Addressee, as identified in the contract.

6.2.2.2. Subject Field: WTS-SE-105 – ECP – [Rev #] – [Date of Issue]

# ENGINEERING CHANGE PROPOSAL (ECP)

1. DATE (*YY/MM/DD*)

2. ORIGINATOR NAME AND ADDRESS

| 3. CLASS OF ECP (I or II) | 4. CLASSIFICATION CODE (Applicable to Class I Only) | 5. PRIORITY |
|---|---|---|

6. ECP DESIGNATION

| No. | Type | Revision |
|---|---|---|

SYSTEM DESIGNATION:

| 7. SPECIFICATIONS / DOCUMENTS AFFECTED | | | 8. DRAWINGS AFFECTED | | |
|---|---|---|---|---|---|
| Spec/Doc No. | Title | Rev | Dwg No. | Title | REV |
| | | | | | |
| | | | | | |
| | | | | | |

9. TITLE OF CHANGE

10. DESCRIPTION OF CHANGE

11. NEED FOR CHANGE

12. CONTRACT NUMBER AND LINE ITEMS

| 13. PRODUCTION EFFECTIVITY | 14. EFFECT UPON PRODUCTION DELIVERY SCHEDULE |
|---|---|

15. RETROFIT

| 15a. RECOMMENDED ITEM EFFECTIVITY | 15b. ESTIMATED KIT DELIVERY SCHEDULE / LOCATIONS |
|---|---|

16. ESTIMATED COSTS / SAVINGS UNDER CONTRACT

| IMPACT ANALYSIS / EFFECTS |
|---|
| 17. ITEMS / SYSTEMS DIRECTLY AFFECTED |
| 18. OTHER SYSTEMS AFFECTED |
| 19. OTHER CONTRACTORS / ACTIVITIES AFFECTED |
| 20. EFFECTS UPON PERFORMANCE / SYSTEM SPECIFICATIONS |
| 21. EFFECTS UPON EMPLOYMENT, INTEGRATED LOGISTICS SUPPORT, TRAINING, OPERATIONAL EFFECTIVENESS, ENVIRONMENT, HEALTH & SAFETY (EHS) OR SOFTWARE |
| 22. EFFECTS UPON ITEM SPECIFICATIONS |
| 23. SUBMITTING ACTIVITY – Authorized Signature (Print Name and Sign) Date |

## `EFFECTS UPON PRODUCT CONFIGURATION IDENTIFICATION, LOGISTICS AND OPERATIONS

| (X) | FACTOR | ENCL | PAR | (X) | FACTOR | ENCL | PAR |
|---|---|---|---|---|---|---|---|
| | **24. EFFECT UPON PRODUCT CONFIGURATION IDENTIFICATION OR CONTRACT** | | | | **25. EFFECT UPON OPERATIONAL EMPLOYMENT** | | |
| | a. PERFORMANCE | | | | a. SAFETY | | |
| | b. WEIGHT BALANCE STABILITY (*Aircraft*) | | | | b. SURVIVABILITY | | |
| | c. WEIGHT-MOMENT (*Other Equipment*) | | | | c. RELIABILITY | | |
| | d. CDRL, TECHNICAL DATA | | | | d. MAINTAINABILITY | | |
| | e. NOMENCLATURE | | | | e. SERVICE LIFE | | |
| | | | | | f. OPERATING PROCEDURES | | |
| | **26. EFFECT UPON INTEGRATED LOGISTICS SUPPORT (ILS) ELEMENTS** | | | | g. ELECTROMAGNETIC INTERFERENCE | | |
| | | | | | h. ACTIVATION SCHEDULE | | |
| | **a. ILS PLANS** | | | | i CRITICAL SINGLE POINT FAILURE ITEMS | | |
| | **b. MAINTENANCE CONCEPT, PLANS AND PROCEDURES** | | | | j. INTEROPERABILITY | | |
| | **c. LOGISTICS SUPPORT ANALYSIS** | | | | | | |
| | **d. INTERIM SUPPORT PROGRAMS** | | | | | | |
| | **e. SPARES AND REPAIR PARTS** | | | | **27. OTHER CONSIDERATIONS** | | |
| | **f. TECH MANUALS/PROGRAMMING TAPES** | | | | a. INTERFACE | | |
| | **g. FACILITIES** | | | | b. OTHER AFFECTED EQUIPMENT/GFE/ GFI | | |
| | **h. SUPPORT EQUIPMENT** | | | | c. PHYSICAL CONSTRAINTS | | |
| | **i. OPERATOR TRAINING** | | | | d. COMPUTER PROGRAMS AND RESOURCES | | |
| | **j. OPERATOR TRAINING EQUIPMENT** | | | | e. REWORK OF OTHER EQUIPMENT | | |
| | **k. MAINTENANCE TRAINING** | | | | f. SYSTEM TEST PROCEDURES | | |
| | **l. MAINTENANCE TRAINING EQUIPMENT** | | | | g. WARRANTY/GUARANTEE | | |
| | **m. CONTRACT MAINTENANCE** | | | | h. PARTS CONTROL | | |
| | **n. PACKAGING, HANDLING, STORAGE, TRANSPORTABILITY** | | | | i. LIFE CYCLE COSTS | | |
| | | | | | | | |
| | | | | | | | |

**28. ALTERNATE SOLUTIONS**

**29. DEVELOPMENTAL STATUS**

**30. RECOMMENDATIONS FOR RETROFIT**

**31. WORK-HOURS, MATERIAL COSTS AND SUBCONTRACT COSTS PER UNIT TO INSTALL RETROFIT KITS**

| a. WORK HOURS | b. MATERIAL COSTS | c. SUBCONTRACT COSTS |
|---|---|---|
| | | |

**32. WORK-HOURS TO CONDUCT SYSTEM TESTS AFTER RETROFIT**

**33. THIS CHANGE MUST BE ACCOMPLISHED**

☐ BEFORE ☐ WITH ☐ AFTER THE FOLLOWING CHANGES

**34. IS CONTRACTOR FIELD SERVICE REPRESENATIVE REQUIRED?**

☐ YES ☐ NO

**35. OUT OF SERVICE TIME**

**36. EFFECT OF THIS ECP AND PREVIOUSLY APPROVED ECPs UPON ITEM**

**37. DATE CONTRACTUAL AUTHORITY NEEDED**

## A3.14 DID – Configuration Status Accounting Report

| DATA ITEM DESCRIPTION | |
|---|---|
| 1. TITLE<br>**Configuration Status Accounting (CSA) Report** | 2. IDENTIFICATION NUMBER<br>DID WTS-SE-106 |
| 3. DESCRIPTION<br>The CSA Report provides details about the current Configuration Items (CIs), including existing CIs and those being developed under the Contract; documentation and identification numbers relating to those CIs, and changes to the items and their configuration documentation | |
| 4. RELATED DOCUMENTS<br>**ANSI/EIA-649-C** – *Configuration Management Standard* | 5. CONTRACT REFERENCE<br>SOW: **Para. 5.5.2 (pg. 29)**<br>CDRL: **App. A2.14 (pg. 118)** |

6. PREPARATION INSTRUCTIONS

6.1. **CONTENT**

6.1.1. The CSA Report must include data from the CSA system, including:

6.1.1.1. the identification of the currently approved configuration documentation and configuration identifiers associated with each CI;

6.1.1.2. the status of proposed engineering changes from initiation to implementation;

6.1.1.3. the status and disposition of discrepancies from configuration audits;

6.1.1.4. the status of applications / requests for deviations and waivers;

6.1.1.5. the ability to trace changes from the baseline documentation of each CI; and

6.1.1.6. the effectiveness and installation status of configuration changes to all CIs at all locations.

6.1.2. **Indentured Item List**

6.1.2.1. For each CI, the CSA Report must include an Indentured Item List that illustrates the breakdown structure of subordinate CIs, parts, assemblies, sub-assemblies and Software, such that the relationships (e.g. where used, next higher assembly) within the product breakdown structure can be clearly understood.

6.1.2.2. The Indentured Item List must, for each item in the product breakdown structure, include:

6.1.2.2.1. the configuration identifier / product identifier / Unique Item Identifier (UII);

6.1.2.2.2. the nature of the CI (i.e. system, hardware, software);

6.1.2.2.3. the manufacturer's Enterprise Identifier (e.g. Commercial and Government Entity (CAGE) code);

6.1.2.2.4. the manufacturer's reference number / part number for the item;

6.1.2.2.5. an Effectivity identifier, such as a version number, useable on code or other, used to designate that a CI is useable on one or more higher-level CIs or end items; and

6.1.2.2.6. the name of the CI, part, component, assembly or Software item, as applicable.

6.1.2.3. The product hierarchy in the Indentured Item List must be described to a level of detail that provides the DND with sufficient understanding of the evolving solution and to meet life cycle support concepts, supportability and other goals under the Contact.

6.1.3. **Functional Baseline Report**

6.1.3.1. The CSA Report must include Functional Baseline Reports that list the configuration documentation used to define the FBL for each CI including:

6.1.3.1.1. requirements specifications (functional, interoperability and interface characteristics and design constraints);

6.1.3.1.2. external interface definition documentation; and

6.1.3.1.3. agreed Verification documentation required to demonstrate the CI's characteristics.

6.1.4. **Product Baseline Report**

6.1.4.1. The CSA Report must include Product Baseline Reports that list the configuration documentation or other information artefacts used to define the PBL for each CI, and which include the following types of documentation:

6.1.4.1.1. specifications for the system and subordinate CIs including both hardware and software CIs;

6.1.4.1.2. interface control documents;

6.1.4.1.3. engineering and manufacturing drawings and associated lists (e.g. bill of materials, wiring lists, assembly drawings, item quantities);

6.1.4.1.4. design documentation (including, as applicable, software and firmware source code, and system, hardware, software and firmware design documentation);

6.1.4.1.5. computer aided design, simulation and modelling files;

6.1.4.1.6. Verification plans, procedures and reports;

6.1.4.1.7. audit reports, certifications and associated action items;

6.1.4.1.8. Engineering Change Proposals (ECPs) and requests for deviations/waivers ;

6.1.4.1.9. operation and maintenance manuals;

6.1.4.1.10. recommended spares and support and test equipment; and

6.1.4.1.11. associated Training materials.

6.1.4.2. Configuration documentation for the Product Baseline Report must be identified to a level of detail commensurate with the expected Defence activities and support strategy for the product.

6.2. **SOFT COPY FORMAT**

6.2.1. The CSA Report must be submitted as a PDF file type.

6.2.2. **Soft Copy format submission size below 7MB** – The CSA Report may be submitted via email as follows:

6.2.2.1. To Field: As per the related CDRL section 9.A. Addressee, as identified in the contract.

6.2.2.2. Subject Field: WTS-SE-106 – CSA Report – [Rev #] – [Date of Issue]

6.2.3. **Soft Copy format submission size at or above 7MB** - The CSA Report must be submitted on CD or DVD media and be labelled as follows:

6.2.3.1. Water Treatment System

6.2.3.2. CSA Report;

6.2.3.3. WTS-SE-106;

6.2.3.4. The Revision number, and

6.2.3.5. The date of issue.

## A3.15 **DID – Acceptance Test Plan and Procedures**

| DATA ITEM DESCRIPTION | |
|---|---|
| 1. TITLE<br>**Acceptance Test Plan and Procedures (ATP&P)** | 2. IDENTIFICATION NUMBER<br>DID WTS-SE-107 |
| 3. DESCRIPTION<br>The ATP&P describes the organisations, schedule, responsibilities, procedures and other details that are necessary for the conduct of the test program, as required under the contract and the approved governing plan for Verification. The activities defined by the ATP&P are used to confirm the quality of the Supplies and that the Contract requirements have been met. | |
| 4. RELATED DOCUMENTS | 5. CONTRACT REFERENCE<br>SOW: **Para. 6.2.4 (pg. 39)**<br>CDRL: **App. A2.15 (pg. 119)** |

6. PREPARATION INSTRUCTIONS

6.1. **CONTENT**

6.1.1. **Detailed Requirements – Plan**

6.1.1.1. The ATP&P must separately identify each requirement, and in respect of each requirement:

6.1.1.1.1. provide a summary description of the test, including the organisation(s) involved in the test and the responsibilities of key individuals;

6.1.1.1.2. reference the RTVM entries that detail which requirements are being tested, and whether Verification of a requirement will be established by the test;

6.1.1.1.3. provide a description of the test article, including test configuration identification;

6.1.1.1.4. detail system configuration and initial conditions for test;

6.1.1.1.5. identify any limitations, assumptions and constraints associated with the Verification activity, including any measurements that need to be taken at the time of the Verification activity to record uncontrollable conditions (e.g. ambient temperature);

6.1.1.1.6. identify any location or environmental considerations for the conduct of the Verification activities;

6.1.1.1.7. state the means, or combination of means, which will be used to Verify compliance with the requirement, for example, stand-alone system, integration test;

6.1.1.1.8. identify, with respect to the means stated in 6.1.1.1.7 above, whether the Verification of the requirement will be fully established by either a discrete test, as part of a test of the complete functioning system, or both;

6.1.1.1.9. identify the precursor test activities and the immediate successor test activities covered by a separate ATP&P, as applicable;

6.1.1.1.10. identify the subordinate test procedures that describe the test steps for each test case listed in the ATP&P; and

6.1.1.1.11. include details of the test organisation and the significant test equipment, documentation and facilities required for the conduct of the Verification activity, with cross-references to the applicable test procedures for additional detail.

6.1.1.2. The ATP&P must define the procedures to be undertaken when a test result indicates that the test article has failed, and to provide traceability of any investigation or technical follow-up, corrective actions, and retest / regression testing, to maintain the integrity of the final results and reports.

6.1.1.3. The ATP&P must list those Acceptance Test Reports (ATRs) that are generated by the ATP&P.

6.1.1.4. The ATP&P must reference the RTVM that provides traceability of each requirement to test item and test procedures that will verify satisfactory compliance.

6.1.2. **Detailed Requirements – Procedures**

6.1.2.1. For each test procedure identified under 6.1.1.1.10 above, the ATP&P must include, using separate annexes for each procedure:

6.1.2.1.1. a description of the scope of the test, including a test method, which must provide a general description of the test activity;

6.1.2.1.2. a description of the configuration of the item(s) under test and initial conditions for test, including any preparatory requirements or other pre-test activities;

6.1.2.1.3. a description of the test equipment (including the configuration of test equipment), documentation (including details of calibration and certification of test equipment if required), venue and personnel required for the conduct of the test;

6.1.2.1.4. all safety precautions necessary for the performance of the test procedure;

6.1.2.1.5. a description of any data inputs or data files required for the conduct of the test; and

6.1.2.1.6. step-by-step procedures for the performance of the test, in sufficient detail to identify every action necessary for the conduct of the test, including:

6.1.2.1.6.1. pre-test actions;

6.1.2.1.6.2. any notes, cautions or warnings that are necessary at each stage of the test procedure;

6.1.2.1.6.3. required operator test input;

6.1.2.1.6.4. expected outcomes or results;

6.1.2.1.6.5. space for recording actual results;

6.1.2.1.6.6. space for comments;

6.1.2.1.6.7. a block for sign-off signatures for all parties present at the test;

6.1.2.1.6.8. a space for recording the configuration of the item(s) under test, including all major hardware and software Configuration Items;

6.1.2.1.6.9. a space for recording all test equipment utilised and the calibration date of the equipment;

6.1.2.1.6.10. if applicable, a space for recording details of test-recording media that will support test analysis; and

6.1.2.1.6.11. a space for recording any post-test actions.

6.1.2.2. In conjunction with each test step, the test procedure must define what measurements, readings, or observations are required for a correct response.

6.1.2.3. As part of the test assessment data, PASS/FAIL criteria or the expected qualitative or quantitative result must also be defined.

6.1.2.4. Where a quantitative result is declared, this must include the allowable tolerance.

6.1.2.5. Where a qualitative result is declared, this must include a description of the expected results of the test.

6.2. **SOFT COPY FORMAT**

6.2.1. The ATP&P must be submitted as a PDF file type.

6.2.2. **Soft Copy format submission size below 7MB** – The ATP&P may be submitted via email as follows:

6.2.2.1. To Field: As per the related CDRL section 9.A. Addressee, as identified in the contract.

6.2.2.2. Subject Field: WTS-SE-107 – ATP&P – [Rev #] – [Date of Issue]

6.2.3. **Soft Copy format submission size at or above 7MB** - The ATP&P must be submitted on CD or DVD media and be labelled as follows:

6.2.3.1. Water Treatment System

6.2.3.2. ATP&P;

6.2.3.3. WTS-SE-107;

6.2.3.4. The Revision number, and

6.2.3.5. The date of issue.

## A3.16 DID – Acceptance Test Report

| DATA ITEM DESCRIPTION | |
|---|---|
| 1. TITLE<br>**Acceptance Test Report (ATR)** | 2. IDENTIFICATION NUMBER<br>DID WTS-SE-108 |
| 3. DESCRIPTION<br>The ATR is used to document the results of the system test activity. In particular, the ATR formally documents the results, conclusions and recommendations of testing conducted according to the governing plan for Verification (e.g. SEMP) and associated Acceptance Test Plan and Procedures (ATP&Ps). | |
| 4. RELATED DOCUMENTS | 5. CONTRACT REFERENCE<br>SOW: **Para. 6.2.5 (pg. 39)**<br>CDRL: **App. A2.16 (pg. 120)** |

6. PREPARATION INSTRUCTIONS

6.1. **CONTENT**

6.1.1. The ATR must include:

6.1.1.1. data to uniquely identify the Supplies being Verified, which may include:

6.1.1.1.1. item names;

6.1.1.1.2. stock numbers;

6.1.1.1.3. part numbers;

6.1.1.1.4. item quantity;

6.1.1.1.5. serial numbers; and

6.1.1.1.6. configuration status;

6.1.2. references to relevant ATP&P and details of any differences between the ATP&P and the 'as run' test procedure;

6.1.3. reports of the relevant verification results, supported by the applicable raw results / measurement data, calculations, etc., as attachments;

6.1.4. reports on any corrective action found necessary as a result of verification activities, and of any subsequent re-verification activities required; and

6.1.5. names of the DND representative(s) who witnessed the verification activities, or reference to the authority given to conduct the verification activities without a DND presence.

6.2. **SOFT COPY FORMAT**

6.2.1. The ATR must be submitted as a PDF file type.

6.2.2. **Soft Copy format submission size below 7MB** – The ATR may be submitted via email as follows:

6.2.2.1. To Field: As per the related CDRL section 9.A. Addressee, as identified in the contract.

6.2.2.2. Subject Field: WTS-SE-108 – ATR – [Rev #] – [Date of Issue]

6.2.3. **Soft Copy format submission size at or above 7MB** - The ATR must be submitted on CD or DVD media and be labelled as follows:

6.2.3.1. Water Treatment System

6.2.3.2. ATR;

6.2.3.3. WTS-SE-108;

6.2.3.4. The Revision number, and

| |
|---|
| The date of issue. |

## A3.17 **DID – Top Level Assembly Drawing**

| **DATA ITEM DESCRIPTION** | |
|---|---|
| 1. TITLE<br>**Top Level Assembly Drawing** | 2. IDENTIFICATION NUMBER<br>DID WTS-ILS-201 |
| 3. DESCRIPTION<br>The Top Level Assembly Drawing (TLAD) describes the assembled relationship of all the parts of the system. | |
| 4. RELATED DOCUMENTS<br>**D-01-400-001/SG-000** *Standard - Engineering Drawing Practices*<br>**D-01-400-002/SF-000** *Specification - Levels of Engineering Drawings* | 5. CONTRACT REFERENCE<br>SOW: **Para. 3.6.2.1 (pg. 17)**<br>CDRL: **App. A2.9 (pg. 113)** |

6. PREPARATION INSTRUCTIONS

6.1. **CONTENT**

6.1.1. The TLAD must contain all information necessary to identify all the components of the WTS.

6.2. **GENERAL FORMAT**

6.2.1. The TLAD must be prepared IAW D-01-400-001/SG-000, Engineering Drawing Practices, para 7.4, and D-01-400-002/SF-000: Levels of Engineering Drawings, para 3.3.2 (Level 2).

6.3. **HARD COPY FORMAT**

6.3.1. The TLAD must be printed on paper with these characteristics:

6.3.1.1. Standard US Ledger size (432 mm x 279 mm)

6.3.1.2. Weight of no less than 90 gsm;

6.3.1.3. Brightness of no less than 92 ISO brightness;

6.4. **SOFT COPY FORMAT**

6.4.1. The TLAD must be submitted as a PDF file type, and match the printed format and layout.

6.4.2. Viewing the PDF version: pages, regardless of size, containing text and illustrations in landscape, must be rotated for electronic viewing and reading in landscape.

6.4.3. **Soft Copy format submission size below 7MB** – The TLAD PDF may be submitted via email as follows:

6.4.3.1. To Field: As per the related CDRL section 9.A. Addressee, as identified in the contract.

6.4.3.2. Subject Field: WTS-ILS-201 – TLAD – [Rev #] – [Date of Issue]

6.4.4. **Soft Copy format submission size at or above 7MB** - The TLAD PDF must be submitted on CD or DVD media and be labelled as follows:

6.4.4.1. Water Treatment System

6.4.4.2. TLAD;

6.4.4.3. WTS-ILS-201;

6.4.4.4. The Revision number, and

6.4.4.5. The date of issue.

## A3.18 **DID – WTS Operator Manual**

| DATA ITEM DESCRIPTION | |
|---|---|
| 1. TITLE<br>**WTS Operator Manual** | 2. IDENTIFICATION NUMBER<br>DID WTS-ILS-202 |
| 3. DESCRIPTION<br>The WTS Operator Manual contains all the essential information required to describe the safe and correct operative procedures and operator maintenance associated with the equipment. | |
| 4. RELATED DOCUMENTS<br>**C-01-100-100/AG-008** *Writer's Guide for Technical Documentation* | 5. CONTRACT REFERENCE<br>SOW: **Paragraph 8.3.1.1.1 (pg. 43)**<br>CDRL: **App. A2.18 (pg. 122)** |

6 PREPARATION INSTRUCTIONS

6.1 **CONTENT**

6.1.1 The WTS Operator Manual must cover the following topics, and others judged pertinent by the Contractor:

6.1.1.1 General Description/Equipment Overview, divided by CI;

6.1.1.2 Pre-use testing/inspection;

6.1.1.3 Preparation and set up for use, assuming a start state of a towing Prime Mover arriving at a staging site;

6.1.1.4 Use and operation to cover the following scenarios:

6.1.1.4.1 The WTU mounted on the Trailer;

6.1.1.4.2 The WTU at ground level;

6.1.1.4.3 The WTU and the ASU equipment in both of the above scenarios; and,

6.1.1.4.4 The WTS Trailer used as a general purpose Trailer (loading and lashing limitations, etc.) in a separate section.

6.1.1.5 Equipment stowage and preparation for travel, from an operating state to the towing Prime mover being ready to leave the area.

6.1.1.6 Operator fault-finding and maintenance, IAW the Maintenance Concept paragraph 8.1 (pg. 42);

6.1.1.7 Shut-down and post-shut-down actions and precautions;

6.1.1.8 Safety/Hazardous material issues;

6.1.2 The WTS Operator Manual material covered in 6.1.1 above, must be amplified by illustrations, line drawings, and high quality colour pictures.

6.1.3 As the ASU will be used only occasionally, where applicable and practicable, the Operator Manual's text must contain references to allow the User to quickly skip information and instructions specific to the ASU as they are moving through the manual (example: "If not using the ASU, go to paragraph 4.5.3"). The intent is to prevent the User from moving back and forth within the manual, instead allowing the User to proceed forward more quickly in the manual when not using the ASU.

6.2 **GENERAL FORMAT**

6.2.1 The WTS Operator Manual must be prepared in the Contractor's format while being in full conformance with the above-stated issue of C-01-100-100/AG-008.

6.2.2 The WTS Operator Manual must include the National Defence Index of Documentation (NDID) number (provided to the Contractor by DND) that must be placed on the top right corner of all the pages of the manual.

6.3 **HARD COPY FORMAT**

6.3.1 The accepted WTS Operator Manual hard copies must be:

6.3.1.1 Printed on paper with these characteristics:

6.3.1.1.1 Standard US Letter Size (270 mm x 216 mm);

6.3.1.1.2 Covers: 320-370 gsm polyester film (such as Pico Film), matt surface and white;

6.3.1.1.3 Pages: 150-190 gsm polyester film (such as Pico Film), matt surface and white.

6.3.1.2 Bound using white or black spiral Polyvinylchloride (PVC) coil.

6.4 **SOFT COPY FORMAT**

6.4.1 The WTS Operator Manual must be provided as both MS Word and PDF file formats with searchable text that matches the printed publication's format and layout. Links, bookmarks and thumbnails are to be included in the PDF file. All references made to a specific paragraph, figure, appendix must be appropriately linked.

6.4.2 Viewing the WTS Operator Manual PDF: pages, regardless of size, containing text and illustrations in landscape, must be rotated for electronic viewing and reading in landscape.

6.4.3 **Soft Copy format submission size below 7MB** – The WTS Operator Manual PDF and its native file may be submitted via email as follows:

6.4.3.1 To Field: As per the related CDRL section 9.A. Addressee, as identified in the contract.

6.4.3.2 Subject Field: WTS-ILS-202 – WTS Operator Manual – [Rev #] – [Date of Issue]

6.4.4 **Soft Copy format submission size at or above 7MB** - The WTS Operator Manual PDF and its native file must be submitted on CD or DVD media and be labelled as follows:

6.4.4.1 Water Treatment System

6.4.4.2 WTS Operator Manual;

6.4.4.3 WTS-ILS-202;

6.4.4.4 The Revision number, and

6.4.4.5 The date of issue.

## A3.19 **DID – WTU Operator Quick Reference Card**

| DATA ITEM DESCRIPTION | |
|---|---|
| 1. TITLE<br>**WTU Operator Quick Reference Card** | 2. IDENTIFICATION NUMBER<br>DID WTS-ILS-203 |
| 3. DESCRIPTION<br>WTU Operator Quick Reference Card (OQRC) will allow the trained user to quickly unpack, assemble, and safely use the equipment. | |
| 4. RELATED DOCUMENTS | 5. CONTRACT REFERENCE<br>SOW: **Paragraph 8.3.1.2.1 (pg. 43)**<br>CDRL: **App. A2.19 (pg. 123)** |

6. PREPARATION INSTRUCTIONS

6.1. **CONTENT**

6.1.1. The OQRC must contain the necessary instructions to allow a trained user to quickly, safely and effectively operate the WTU in any filtration process mode.

6.1.2. The OQRC must assume that the WTU's initial state is: staged, either on or off the WTS Trailer.

6.1.3. The OQRC instructions must be based on pictograms illustrating the sequence of steps required while using only minimal text to assist in the understanding of the document. Desired look and feel would be similar to commercial airline safety pamphlets describing the use of oxygen masks, and emergency exits.

6.1.4. The OQRC must not introduce new information and procedures not also described in the WTS Operator Manual, as the WTS Operator Manual is the master document on how to use the equipment.

6.1.5. The OQRC must contain a Cautionary Advisory with the appropriate safety heading:

6.1.5.1. The OQRC Cautionary Advisory's heading must be determined based on the criteria set out in ANNEX A SOW Paragraph 8.3.3.1.

6.1.5.2. The OQRC Cautionary Advisory must read: "**This WTU Operator Quick Reference Card is intended solely for experienced users who have been trained on this equipment, and have read and understood its WTS Operator Manual** (CFTO# to be supplied by DND). **When in doubt, read the WTS Operator Manual before operating this equipment**."

6.1.5.3. The OQRC cautionary advisory must also have, immediately following this text, a brief description of the consequences of misuse of the equipment, linked to the same criteria listed in 6.1.5.1 above.

6.2. **HARD COPY FORMAT**

6.2.1. The accepted OQRC hard copies must:

6.2.1.1. Be printed on paper with pages of 320-370 gsm polyester film (such as Pico Film), matt surface and white colour;

6.2.1.2. Be bound with white or black spiral PVC coil (such as PLASTIKOIL®);

6.2.1.3. Contain no more than six (6) sheets of standard US Letter size (270 mm x 216 mm);

6.2.1.4. Be produced and printed exclusively in black and white (for legibility in black-out mode).

6.3. **SOFT COPY FORMAT**

6.3.1. The OQRC must be provided as a PDF file with searchable text that matches the printed publication's format and layout. Links, bookmarks and thumbnails are to be included in the PDF file.

6.3.2. Viewing the OQRC PDF: pages, regardless of size, containing text and illustrations in landscape, must be rotated for electronic viewing and reading in landscape.

6.3.3. **Soft Copy format submission size below 7MB** – The OQRC PDF and its native file may be submitted via email as follows:

6.3.3.1. To Field: As per the related CDRL section 9.A. Addressee, as identified in the contract.
6.3.3.2. Subject Field: WTS-ILS-203 – OQRC – [Rev #] – [Date of Issue]

6.3.4. **Soft Copy format submission size at or above 7MB** - The OQRC PDF and its native file must be submitted on CD or DVD media and be labelled as follows:

6.3.4.1. Water Treatment System
6.3.4.2. OQRC;
6.3.4.3. WTS-ILS-203;
6.3.4.4. The Revision number, and
6.3.4.5. The date of issue.

## A3.20 **DID – WTS Maintenance Manual**

| DATA ITEM DESCRIPTION | |
|---|---|
| 1. TITLE<br>**WTS Maintenance Manual** | 2. IDENTIFICATION NUMBER<br>DID WTS-ILS-204 |
| 3. DESCRIPTION<br>The WTS Maintenance Manual contains all the information required by the Technician to perform preventative and corrective maintenance procedures and troubleshooting of the equipment. | |
| 4. RELATED DOCUMENTS<br>**D-01-100-204/SF-000** *Preparation of Preventive Maintenance Instructions*<br>**D-01-100-205/SF-000** *Preparation of Corrective Maintenance Instructions*<br>**C-01-100-100/AG-008** *Writer's Guide for Technical Documentation* | 5. CONTRACT REFERENCE<br>SOW: **Paragraph 8.3.1.3.1 (pg. 43)**<br>CDRL: **App. A2.20 (pg. 124)** |

6. PREPARATION INSTRUCTIONS

6.1. **CONTENT**

6.1.1. The WTS Maintenance Manual must provide descriptive essential, preventive and corrective maintenance information on all components, groups of equipment and systems IAW the Maintenance Concept, Paragraph 8.1.2.2 (pg. 42).

6.1.2. Information generated from 6.1.1 above must be sorted and divided by main assembly (WTU, Trailer, MEU and ASU), and then IAW D-01-100-204/SF-001 and IAW D-01-100-205/SF-001 within the main assembly's section.

6.1.3. The WTS Maintenance Manual text must be amplified by comprehensive system or component illustrations, good quality color pictures, pictograms and schematics.

6.2. **GENERAL FORMAT**

6.2.1. The WTS Maintenance Manual must be prepared in the Contractor's format and be in full conformance with the current issue of C-01-100-100/AG-008, D-01-100-204/SF-000 and D-01-100-205/SF-000.

6.2.2. The WTS Maintenance Manual must include the National Defence Index of Documentation (NDID) number (provided to the Contractor by DND) that must be placed on the right top corner of all the pages of the manual.

6.2.3. The WTS Maintenance Manual must use illustrations, good quality color pictures and pictograms as appropriate to enable Technicians.

6.3. **HARD COPY FORMAT**

6.3.1. The accepted WTS Maintenance Manual hard copies must be:

6.3.1.1. Printed on paper with these characteristics:

6.3.1.1.1. Standard US Letter Size (216 mm x 270 mm);

6.3.1.1.2. Covers: 320-370 gsm polyester film (such as Pico Film), matt surface and white;

6.3.1.1.3. Pages: 150-190 gsm polyester film (such as Pico Film), matt surface and white;

6.3.1.2. Bound with white or black spiral PVC coil (such as such as PLASTIKOIL®)

6.4. **SOFT COPY FORMAT**

6.4.1. The WTS Maintenance Manual soft copy format must meet the following:

6.4.1.1. Be submitted as PDF and its native file and match the printed publication's format and layout. Links, bookmarks, and thumbnails are to be included in the PDF file.

6.4.1.2. All references made to a specific paragraph, figure, appendix must be appropriately linked.

6.4.1.3. Viewing the files: pages, regardless of size, containing text and illustrations in landscape, must be rotated for electronic viewing and reading in landscape.

6.4.2. **Soft Copy format submission size below 7MB** – The WTS Maintenance Manual PDF and its native file may be submitted via email as follows:

6.4.2.1. To Field: As per the related CDRL section 9.A. Addressee, as identified in the contract.

6.4.2.2. Subject Field: WTS-ILS-204 – WTS Maintenance Manual – [Rev #] – [Date of Issue]

6.4.3. **Soft Copy format submission size at or above 7MB** - The WTS Maintenance Manual PDF and its native file must be submitted on CD or DVD media and be labelled as follows:

6.4.3.1. Water Treatment System

6.4.3.2. WTS Maintenance Manual;

6.4.3.3. WTS-ILS-204;

6.4.3.4. The Revision number, and

6.4.3.5. The date of issue.

## A3.21 DID – WTS Permissive Repair Schedule and Standard Repair Times

| DATA ITEM DESCRIPTION | |
|---|---|
| 1. TITLE<br>**WTS Permissive Repair Schedule and Standard Repair Times** | 2. IDENTIFICATION NUMBER<br>DID WTS-ILS-205 |
| 3. DESCRIPTION<br>The WTS Permissive Repair Schedule and Standard Repair Times (PRS & SRT) provides information for maintenance support and planning of the equipment. | |
| 4. RELATED DOCUMENTS<br>**C-04-010-002/AM-000** *Permissive Repair Schedules (PRSs) and Standard Repair Times (SRTs);*<br>**C-04-006-001/AM-001** *Land Maintenance System Lines of Maintenance and Levels of Repair* | 5. CONTRACT REFERENCE<br>SOW: **Paragraph 8.3.1.4.1 (pg. 43)**<br>CDRL: **App. A2.21 (pg. 125)** |

6. PREPARATION INSTRUCTIONS

6.1. **CONTENT**

6.1.1. The PRS & SRT must include a breakdown of all maintenance tasks for Operators and Technicians, IAW the Maintenance Concept (see Annex A, Paragraph 8.1 (pg. 42).

6.1.2. The Levels of Repair and Lines of Maintenance for the PRS & SRT must be determined using the definitions provided in C-04-006-001/AM-001 and in discussions with DND ILS personnel.

6.2. **GENERAL FORMAT**

6.2.1. The PRS & SRT must be prepared in full conformance with C-04-010-002/AM-000;

6.2.2. The PRS & SRT must have the National Defence Index of Documentation (NDID) number (provided to the Contractor by DND) that must be placed on the top right corner of each page.

6.3. **HARD COPY FORMAT**

6.3.1. The PRS & SRT hard copies must be:

6.3.1.1. Printed on paper with these characteristics:

6.3.1.1.1. Standard US Letter Size (270 mm x 216 mm)

6.3.1.1.2. Covers: 320-370 gsm polyester film (such as Pico Film), matt surface and white colour

6.3.1.1.3. Pages: 150-190 gsm polyester film (such as Pico Film), matt surface and white colour

6.3.1.2. Bound with white or black spiral PVC coil (such as PLASTIKOIL®)

6.4. **SOFT COPY FORMAT**

6.4.1. The PRS & SRT must be provided as PDF and native file formats with searchable text that matches the printed publication's format and layout. Links, bookmarks and thumbnails are to be included in the PDF file. All references made to a specific paragraph, figure, appendix must be appropriately linked.

6.4.2. **Soft Copy format submission size below 7MB** – The PRS & SRT PDF and its native file may be submitted via email as follows:

6.4.2.1. To Field: As per the related CDRL section 9.A. Addressee, as identified in the contract.

6.4.2.2. Subject Field: WTS-ILS-205 – PRS & SRT – [Rev #] – [Date of Issue]

6.4.3. **Soft Copy format submission size at or above 7MB** - The PRS & SRT PDF and its native file must be submitted on CD or DVD media and be labelled as follows:

6.4.3.1. Water Treatment System

6.4.3.2. PRS & SRT;

6.4.3.3. WTS-ILS-205;

6.4.3.4. The Revision number, and

6.4.3.5. The date of issue.

## A3.22 DID – WTS Illustrated Parts Manual

| DATA ITEM DESCRIPTION | |
|---|---|
| 1. TITLE<br>**WTS Illustrated Parts Manual** | 2. IDENTIFICATION NUMBER<br>DID WTS-ILS-206 |
| 3. DESCRIPTION<br>The WTS Illustrated Parts Manual contains all the necessary information to positively identify all parts of the equipment. | |
| 4. RELATED DOCUMENTS<br>**D-01-100-207/SF-002** *Preparation of Interim WTS Illustrated Parts Manuals for Land Equipment***.** | 5. CONTRACT REFERENCE<br>SOW: **Paragraph 8.3.1.5.1 (pg. 43)**<br>CDRL: **App. A2.22 (pg. 126)** |

6 PREPARATION INSTRUCTIONS

6.1 **CONTENT**

6.1.1 The WTS Illustrated Parts Manual content must be IAW D-01-100-207/SF-002, and the drawings must be sequenced as per the PPB breakdown of assemblies, by level. That is, an illustration showing a B-level assembly must have have all C-level parts identified in that drawing, as practicable. All of the C-level parts from that list that have D-level parts must have their illustrations sequenced as per the PPB, drilling completely through the assemblies before showing the next. See Fig 1 below.

| PPB Indention | Serial |
|---|---|
| A | ***1*** |
| B | ***2*** |
| C | ***3*** |
| C | ***4*** |
| D | ***5*** |
| D | ***6*** |
| C | ***7*** |
| D | ***8*** |
| D | ***9*** |
| B | ***10*** |
| C | ***11*** |
| C | ***12*** |

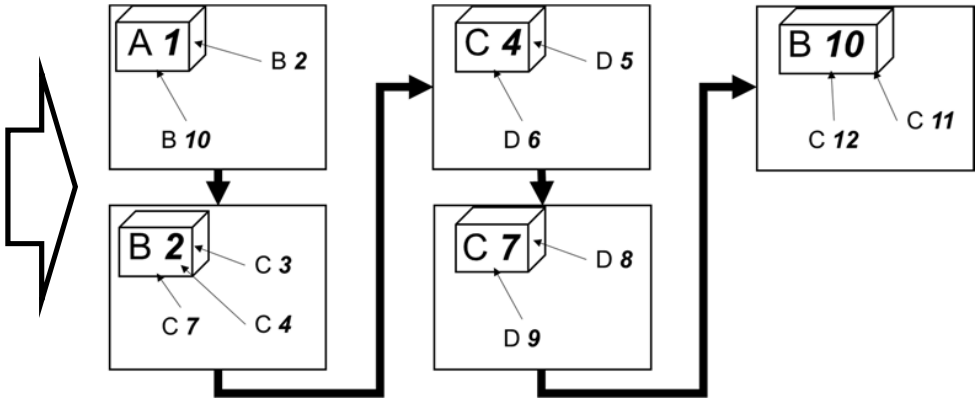


**Figure 1. IPM Breakdown Sequence**

6.1.2 The WTS Illustrated Parts Manual must contain illustrations, exploded views, and drawings and associated lists necessary for the proper identification of all parts, assemblies, and special equipment to the Lowest Replaceable Unit (LRU).

6.1.3 The exploded views contained in the WTS Illustrated Parts Manual must amplify the relationship between all parts and assemblies to facilitate repair of the equipment and the replacement of parts and assemblies down to the LRU.

6.1.4 The WTS Illustrated Parts Manual must include the National Defence Index of Documentation (NDID) number, provided to the Contractor by DND, which must be placed on the top right corner of each page of the manual.

6.2 **GENERAL FORMAT**

6.2.1 The format of the WTS Illustrated Parts Manual must be IAW D-01-100-207/SF-002, with the exception that “NCAGE” must be used instead of “NSCM” (see DID WTT-ILS-211).

6.2.2 The WTS Illustrated Parts Manual must **not** use photographs as illustrations.

6.3 **HARD COPY FORMAT**

6.3.1 The accepted WTS Illustrated Parts Manual hard copies must be:

6.3.1.1 Printed on paper with these characteristics:

6.3.1.1.1 Standard US Letter Size (216 mm x 270 mm);

6.3.1.1.2 Covers: 320-370 gsm Polyester film, matt surface and white;

6.3.1.1.3 Pages: 150-190 gsm Polyester film, matt surface and white;

6.3.1.2 Bound with white or black spiral PVC coil (such as PLASTIKOIL®).

6.4 **SOFT COPY FORMAT**

6.4.1 The WTS Illustrated Parts Manual soft copy format must be PDF, with searchable text, with pages rotated as needed for normal viewing on screen.

6.4.2 **Soft Copy format submission size below 7MB** – The WTS Illustrated Parts Manual PDF may be submitted via email as follows:

6.4.2.1 To Field: As per the related CDRL section 9.A. Addressee, as identified in the contract.

6.4.2.2 Subject Field: WTS-ILS-206 – WTS Illustrated Parts Manual – Rev [#] – [Date of Issue]

6.4.3 **Soft Copy format submission size at or above 7MB** - The WTS Illustrated Parts Manual PDF and its native file must be submitted on CD or DVD media and be labelled as follows:

6.4.3.1 Water Treatment System

6.4.3.2 WTS Illustrated Parts Manual;

6.4.3.3 WTS-ILS-206;

6.4.3.4 The Revision number, and

6.4.3.5 The date of issue.

## A3.23 **DID – WTS Operator Training Package**

| DATA ITEM DESCRIPTION | |
|---|---|
| 1. TITLE<br>**WTS Operator Training Package** | 2. IDENTIFICATION NUMBER<br>DID WTS-ILS-207 |
| 3. DESCRIPTION<br>The WTS Operator Training Package will be used as the reference material during the Training Sessions, and to facilitate future lesson plan preparation on the operation, Operator maintenance and storage of the equipment. | |
| 4. RELATED DOCUMENTS<br>**C-01-100-100/AG-008** *Writer's Guide for Technical Documentation* | 5. CONTRACT REFERENCE<br>SOW: **Paragraph 8.3.1.6.1 (pg. 44)**<br>CDRL: **App. A2.23 (pg. 127)** |

6. PREPARATION INSTRUCTIONS

6.1. **CONTENT**

6.1.1. The WTS Operator Training Package course material must include, in the order judged most appropriate by the Contractor, the following subjects:

6.1.1.1. General Description/Equipment Overview;

6.1.1.2. Pre-use testing/inspection;

6.1.1.3. Preparation and set up for use;

6.1.1.4. Use and operation, including operation under emergency, adverse, or abnormal conditions, when applicable;

6.1.1.5. Preparation for travel and handling;

6.1.1.6. Storage, preservation, exercising, and reactivation procedures;

6.1.1.7. Safety and Hazardous material issues;

6.1.1.8. Operator Troubleshooting and testing;

6.1.1.9. Basic diagnosis and fault finding; and,

6.1.1.10. Operator Maintenance IAW the Maintenance Concept Paragraph 8.1 (pg. 42).

6.1.2. The Operator Training Package course material must be amplified by colour illustrations, line drawings, and good quality colour pictures.

6.1.3. The WTS Operator Training Package course material subjects must be approached from the perspective of a user trained in basic water purification concepts.

6.1.4. The WTS Operator Training Package course material must not present any information that cannot also be found in the Technical Publication Package documents; those documents remain the primary reference for the equipment.

6.1.5. The WTS Operator Training Package must include a **Student Handout** that includes the course material described above.

6.1.6. The WTS Operator Training Package must include an **Instructor Lesson Plan** that includes the course material described above, speaker's notes, and outlines the following:

6.1.6.1. Classroom's physical and functional requirements;

6.1.6.2. Field area's physical and functional requirements;

6.1.6.3. Training Session schedule, divided by course material subjects;

6.1.6.4. Instructor/Student ratio for the course material subjects;

6.1.6.5. Training materiel to be supplied by the Contractor;

6.1.6.6. Training material to be supplied by Canada.

6.2. **GENERAL FORMAT**

6.2.1. The WTS Operator Training Package can be prepared in the Contractor's format while using C-01-100-100/AG-008 as guidance.

6.2.2. No Contractor or sub-contractor logo, name, trademark, or other wording or device that may be interpreted as advertising must appear in the publication.

6.2.3. The WTS Operator Training Package **Student Handout** must have no more than three (3) slides per page of the course material, and have additional space and lines for note taking.

6.2.4. The WTS Operator Training Package **Instructor Lesson Plan** must have one (1) slide per page of the course material, with the speaker's notes below it.

6.3. **HARD COPY FORMAT**

6.3.1. The WTS Operator Training Package must be furnished in a three (3) ring binder(s) and printed on paper with these characteristics:

6.3.1.1. Weight of no less than 90 gsm;

6.3.1.2. Brightness of no less than 92 ISO brightness;

6.4. **SOFT COPY FORMAT**

6.4.1. The WTS Operator Training Package soft copy format must be MS PowerPoint.

6.4.2. **Soft Copy format submission size below 7MB** – The WTS Operator Training Package may be submitted via email as follows:

6.4.2.1. To Field: As per the related CDRL section 9.A. Addressee, as identified in the contract.

6.4.2.2. Subject Field: WTS-ILS-207 – WTS Operator Training Package – [Rev #] – [Date of Issue]

6.4.3. **Soft Copy format submission size at or above 7MB** - The WTS Operator Training Package file must be submitted on CD or DVD media and be labelled as follows:

6.4.3.1. Water Treatment System

6.4.3.2. WTS Operator Training Package;

6.4.3.3. WTS-ILS-207;

6.4.3.4. The Revision number, and

6.4.3.5. The date of issue.

## A3.24 DID – WTU and ASU Technician Training Package

| DATA ITEM DESCRIPTION | |
|---|---|
| 1. TITLE<br>**WTU and ASU Technician Training Package** | 2. IDENTIFICATION NUMBER<br>DID WTS-ILS-208 |
| 3. DESCRIPTION<br>The WTU and ASU Technician Training Package will be used as the reference material during the Training Sessions, and to facilitate future lesson plan preparation on the operation, Technician maintenance and storage of the equipment. | |
| 4. RELATED DOCUMENTS<br>**C-01-100-100/AG-008** *Writer's Guide for Technical Documentation* | 5. CONTRACT REFERENCE<br>SOW: **Paragraph 8.3.1.7.1 (pg. 44)**<br>CDRL: **App. A2.24 (pg. 128)** |

6. PREPARATION INSTRUCTIONS

6.1. **CONTENT**

6.1.1. The WTU and ASU Technician Training Package course material must include, in the order judged most appropriate by the Contractor, the following subjects:

6.1.1.1. General Description/Equipment Overview;

6.1.1.2. Pre-use testing/inspection;

6.1.1.3. Preparation and set up for use;

6.1.1.4. Use and operation, including operation under emergency, adverse, or abnormal conditions, when applicable;

6.1.1.5. Storage, preparation for travel, preservation, and handling procedures;

6.1.1.6. Safety and hazardous material issues;

6.1.1.7. Troubleshooting and testing;

6.1.1.8. Advanced diagnosis and fault finding;

6.1.1.9. Corrective and preventive maintenance procedures that are particular to the equipment versus general mechanical procedures, IAW the Maintenance Concept Paragraph 8.1 (pg. 42).

6.1.2. The Technician Training Package course material must be amplified by colour illustrations, line drawings, and good quality colour pictures.

6.1.3. The WTU and ASU Technician Training Package course material subjects must be approached from the perspective of Technicians who are experienced in general water treatment equipment maintenance.

6.1.4. The WTU and ASU Technician Training Package course material must not present any information that cannot also be found in the Technical Publication Package documents; those documents remain the primary reference for the equipment.

6.1.5. The WTU and ASU Technician Training Package must include a **Student Handout** that includes the course material described above.

6.1.6. The WTU and ASU Technician Training Package must include an **Instructor Lesson Plan** that includes the course material described above, speaker's notes, and outlines the following:

6.1.6.1. Classroom's physical and functional requirements;

6.1.6.2. Field area's physical and functional requirements;

6.1.6.3. Training Session schedule divided by course material subjects;

6.1.6.4. Instructor/Student ratio for the course material subjects;

6.1.6.5. Training materiel to be supplied by the Contractor;

6.1.6.6. Training material to be supplied by Canada.

6.2. **GENERAL FORMAT**

6.2.1. The WTU and ASU Technician Training Package can be prepared in the Contractor's format, using C-01-100-100/AG-008 as guidance.

6.2.2. No Contractor or sub-contractor logo, name, trademark, or other wording or device that may be interpreted as advertising must appear in the publication.

6.2.3. The WTU and ASU Technician Training Package **Student Handout** must have no more than three (3) slides per page of the course material, and have additional space and lines for note taking.

6.2.4. The WTU and ASU Technician Training Package **Instructor Lesson Plan** must have one (1) slide per page of the course material, with the speaker's notes below it.

6.3. **HARD COPY FORMAT**

6.3.1. The WTU and ASU Technician Training Package must be furnished in a three (3) ring binder(s) and printed on paper with these characteristics:

6.3.1.1. Weight of no less than 90 gsm;

6.3.1.2. Brightness of no less than 92 ISO brightness;

6.4. **SOFT COPY FORMAT**

6.4.1. The WTU and ASU Technician Training Package soft copy format must be MS PowerPoint.

6.4.2. **Soft Copy format submission size below 7MB** – The WTU and ASU Technician Training Package may be submitted via email as follows:

6.4.2.1. To Field: As per the related CDRL section 9.A. Addressee, as identified in the contract.

6.4.2.2. Subject Field: WTS-ILS-208 – WTU and ASU Technician Training Package – [Rev #] – [Date of Issue]

6.4.3. **Soft Copy format submission size at or above 7MB** - The WTU and ASU Technician Training Package file must be submitted on CD or DVD media and be labelled as follows:

6.4.3.1. Water Treatment System

6.4.3.2. WTU and ASU Technician Training Package;

6.4.3.3. WTS-ILS-208;

6.4.3.4. The Revision number, and

6.4.3.5. The date of issue.

## A3.25 DID – WTS Preservation, Storage and Reactivation Instructions

| DATA ITEM DESCRIPTION | |
|---|---|
| 1. TITLE<br>**WTS Preservation, Storage and Reactivation Instructions** | 2. IDENTIFICATION NUMBER<br>DID WTS-ILS-209 |
| 3. DESCRIPTION<br>The WTS Preservation, Storage and Reactivation Instructions (PSRI) provides guidance for the storage and preservation, in-storage inspections, exercising, and reactivation of equipment. | |
| 4. RELATED DOCUMENTS<br>**D-01-100-211/SF-000** *Preservation, Storage and Handling Instructions*<br>**C-01-100-100/AG-008** *Writer's Guide for Technical Documentation* | 5. CONTRACT REFERENCE<br>SOW: **Paragraph 8.3.1.8.1 (pg. 44)**<br>CDRL: **App. A2.25 (pg. 129)** |

6. PREPARATION INSTRUCTIONS

6.1. **CONTENT**

6.1.1. The WTS PSRI must contain the necessary data as outlined in D-01-100-211/SF-000, *Preservation, Storage and Handling Instructions,* **omitting** Part 4 – Handling and Shipping.

6.1.2. The WTS PSRI must be divided by main assembly (WTU, Trailer, MEU, ASU and WSU).

6.2. **GENERAL FORMAT**

6.2.1. The PSRI must be prepared in the Contractor's format while being in full conformance with the above-stated issue of C-01-100-100/AG-008.

6.2.2. The PSRI must have the National Defence Index of Documentation (NDID) number, provided to the Contractor by DND, on the top right corner of all the pages.

6.3. **HARD COPY FORMAT**

6.3.1. The accepted PSRI hard copies must be:

6.3.1.1. Printed on paper with these characteristics:

6.3.1.1.1. Standard US Letter Size (216 mm x 270 mm);

6.3.1.1.2. Covers: 320-370 gsm polyester film (such as Pico Film), matt surface and white;

6.3.1.1.3. Pages: 150-190 gsm polyester film (such as Pico Film), matt surface and white;

6.3.1.2. Bound with white or black spiral PVC coil (such as PLASTIKOIL®)

6.4. **SOFT COPY FORMAT**

6.4.1. The PSRI must be provided as a PDF file with searchable text that matches the printed publication's format and layout. Links, bookmarks and thumbnails are to be included in the PDF file. All references made to a specific paragraph, figure, appendix must be appropriately linked.

6.4.2. Viewing the PDF version: pages, regardless of size, containing text and illustrations in landscape, must be rotated for electronic viewing and reading in landscape.

6.4.3. **Soft Copy format submission size below 7MB** – The PRSI PDF and its native file may be submitted via email as follows:

6.4.3.1. To Field: As per the related CDRL section 9.A. Addressee, as identified in the contract.

6.4.3.2. Subject Field: WTS-ILS-209 – PRSI – [Rev #] – [Date of Issue]

6.4.4. **Soft Copy format submission size at or above 7MB** - The PRSI PDF and its native file must be submitted on CD or DVD media and be labelled as follows:

6.4.4.1. Water Treatment System

6.4.4.2. PRSI;

6.4.4.3. WTS-ILS-209;

6.4.4.4. The Revision number, and

6.4.4.5. The date of issue.

## A3.26 DID – WTS Stowage, Shipping, and Handling Instructions

| DATA ITEM DESCRIPTION | |
|---|---|
| 1. TITLE<br>**WTS Stowage, Shipping, and Handling Instructions** | 2. IDENTIFICATION NUMBER<br>DID WTS-ILS-210 |
| 3. DESCRIPTION<br>The WTS Stowage, Shipping, and Handling Instructions (SSHI) manual provides guidance for the safe stowage, shipping and handling of the equipment. | |
| 4. RELATED DOCUMENTS<br>**D-01-100-211/SF-000** *Preservation, Storage and Handling Instructions*<br>**C-01-100-100/AG-008** *Writer's Guide for Technical Documentation* | 5. CONTRACT REFERENCE<br>SOW: **Paragraph 8.3.1.9.1 (pg. 44)**<br>CDRL: **App. A2.26 (pg. 130)** |

6. PREPARATION INSTRUCTIONS

6.1. **CONTENT**

6.1.1. The WTS SSHI must contain the necessary data as outlined in Part 4 – *Handling and Shipping* of D-01-100-211/SF-000, arranged for the following scenarios:

6.1.1.1. The WTS as one unit, consisting of the WTU and the MEU, secured to the Trailer:

6.1.1.1.1. Standard means of conveyance, including:

6.1.1.1.1.1. Towed by SMP vehicle;

6.1.1.1.1.2. Towed by an adequate civilian / commercial vehicle;

6.1.1.1.1.3. Rail transport;

6.1.1.1.1.4. Maritime transport; and,

6.1.1.1.1.5. Air Transport.

6.1.1.1.2. Standard means of handling, including:

6.1.1.1.2.1. Cranes

6.1.1.1.3. If any of the means of conveyance or handling require the removal of the WTU and MEU from the Trailer, this procedure must be included in the WTS SSHI.

6.1.1.2. The Trailer alone;

6.1.1.2.1. Standard means of conveyance, including:

6.1.1.2.1.1. Towed by SMP vehicle;

6.1.1.2.1.2. Towed by civilian / commercial vehicle;

6.1.1.2.1.3. Stowed on another generic flat trailer;

6.1.1.2.1.4. Rail transport;

6.1.1.2.1.5. Maritime transport; and,

6.1.1.2.1.6. Air Transport.

6.1.1.2.2. All standard means of handling:

6.1.1.2.2.1. Cranes;

6.1.1.2.2.2. Military Mobile Maintenance and Recovery Vehicles (TBD);

6.1.1.3. The WTU and MEU as conjoined containers:

6.1.1.3.1. Standard means of conveyance, including:

6.1.1.3.1.1. Stowed on a generic flat trailer;

6.1.1.3.1.2. Stowed on the WTS Trailer;

6.1.1.3.1.3. Rail transport;

6.1.1.3.1.4. Maritime transport; and,

6.1.1.3.1.5. Air Transport.

6.1.1.3.2. All standard means of handling:

6.1.1.3.2.1. Cranes;

6.1.1.3.2.2. Forklifts;

6.1.2. Data common to all means of conveyance and handling need not be repeated and can be grouped in a general section.

6.2. **GENERAL FORMAT**

6.2.1. The SSHI must be prepared in the Contractor's format while being in full conformance with the above-stated issue of C-01-100-100/AG-008.

6.2.2. The SSHI must have the National Defence Index of Documentation (NDID) number, provided to the Contractor by DND, on the top right corner of all the pages.

6.3. **HARD COPY FORMAT**

6.3.1. The accepted SSHI hard copies must be:

6.3.1.1. Printed on paper with these characteristics:

6.3.1.1.1. Standard US Letter Size (216 mm x 270 mm);

6.3.1.1.2. Covers: 320-370 gsm polyester film (such as Pico Film), matt surface and white;

6.3.1.1.3. Pages: 150-190 gsm polyester film (such as Pico Film), matt surface and white;

6.3.1.2. Bound with white or black spiral PVC coil (such as PLASTIKOIL®)

6.4. **SOFT COPY FORMAT**

6.4.1. The SSHI must be provided as a PDF file with searchable text that matches the printed publication's format and layout. Links, bookmarks and thumbnails are to be included in the PDF file. All references made to a specific paragraph, figure, appendix must be appropriately linked.

6.4.2. Viewing the PDF version: pages, regardless of size, containing text and illustrations in landscape, must be rotated for electronic viewing and reading in landscape.

6.4.3. **Soft Copy format submission size below 7MB** – The SSHI PDF and its native file may be submitted via email as follows:

6.4.3.1. To Field: As per the related CDRL section 9.A. Addressee, as identified in the contract.

6.4.3.2. Subject Field: WTS-ILS-210 – SSHI – [Rev #] – [Date of Issue]

6.4.4. **Soft Copy format submission size at or above 7MB** - The SSHI PDF and its native file must be submitted on CD or DVD media and be labelled as follows:

6.4.4.1. Water Treatment System

6.4.4.2. SSHI;

6.4.4.3. WTS-ILS-210;

6.4.4.4. The Revision number, and

6.4.4.5. The date of issue.

## A3.27 DID – WTS Data Summary

| DATA ITEM DESCRIPTION | |
|---|---|
| 1. TITLE<br>**WTS Data Summary** | 2. IDENTIFICATION NUMBER<br>DID WTS-ILS-211 |
| 3. DESCRIPTION<br>The WTS Data Summary provides technical specifications and descriptive identification data for the equipment, in abbreviated form, suitable for management or staff planning. | |
| 4. RELATED DOCUMENTS<br>**D-01-100-200/SF-00**, *Preparation of Equipment Data Summaries; and,*<br>**C-01-100-100/AG-008,** *Writer's Guide for Technical Documentation* | 5. CONTRACT REFERENCE<br>SOW: **Paragraph 8.3.1.10.1 (pg. 44)**<br>CDRL: **App. A2.27 (pg. 131)** |

6. PREPARATION INSTRUCTIONS

6.1. **CONTENT**

6.1.1. The WTS Data Summary's content must be as outlined in D-01-100-200/SF-015, with the deviation that only line drawings must be used. Only applicable data points need to be included, i.e. the document must not contain "not applicable" or "n/a" markings.

6.1.2. The WTS Data Summary contents must be included for the following system permutations, in the order listed, each in a ready-to-deploy configuration:

6.1.2.1. The WTS complete, with WTU, MEU loaded and secured to the Trailer, ready to deploy

6.1.2.2. The WTU container independently;

6.1.2.3. The MEU container independently; and,

6.1.2.4. The Trailer independently.

6.2. **GENERAL FORMAT**

6.2.1. The WTS Data Summary must be prepared in the Contractor's format while being in full conformance with the above-stated issue of C-01-100-100/AG-008.

6.2.2. The WTS Data Summary must have the National Defence Index of Documentation (NDID) number, provided to the Contractor by DND, on the top right corner of all the pages.

6.3. **HARD COPY FORMAT**

6.3.1. The accepted WTS Data Summary hard copies must be:

6.3.1.1. Printed on paper with these characteristics:

6.3.1.1.1. Standard US Letter Size (216 mm x 270 mm);

6.3.1.1.2. Covers: 320-370 gsm polyester film (such as Pico Film), matt surface and white;

6.3.1.1.3. Pages: 150-190 gsm polyester film (such as Pico Film), matt surface and white;

6.3.1.2. Bound with white or black spiral PVC coil (such as PLASTIKOIL®)

6.4. **SOFT COPY FORMAT**

6.4.1. The WTS Data Summary must be provided as a PDF file with searchable text that matches the printed publication's format and layout. Links, bookmarks and thumbnails are to be included in the PDF file. All references made to a specific paragraph, figure, appendix must be appropriately linked.

6.4.2. **Soft Copy format submission size below 7MB** – The WTS Data Summary PDF and its native file may be submitted via email as follows:

6.4.2.1. To Field: As per the related CDRL section 9.A. Addressee, as identified in the contract.

6.4.2.2. Subject Field: WTS-ILS-211 – WTS Data Summary – [Rev #] – [Date of Issue]

6.4.3. **Soft Copy format submission size at or above 7MB** - The WTS Data Summary PDF and its native file must be submitted on CD or DVD media and be labelled as follows:

6.4.3.1. Water Treatment System

6.4.3.2. WTS Data Summary;

6.4.3.3. WTS-ILS-211;

6.4.3.4. The Revision number, and

6.4.3.5. The date of issue.

## A3.28 DID – MEU and ASU Stowage Maps

| DATA ITEM DESCRIPTION | |
|---|---|
| 1. TITLE<br>**MEU, ASU and WSU Stowage Maps** | 2. IDENTIFICATION NUMBER<br>DID WTS-ILS-212 |
| 3. DESCRIPTION<br>The MEU, ASU and WSU Stowage Maps will lay out where items are stored within the MEU Enclosure and the ASU Enclosure in separate documents to allow WTS Users to quickly locate items or identify missing items and aid in the stowage of items when operations are complete. | |
| 4. RELATED DOCUMENTS | 5. CONTRACT REFERENCE<br>SOW: **Paragraph 8.3.1.11 (pg. 44)**<br>CDRL: **App. A2.28 (pg. 132)** |

6. PREPARATION INSTRUCTIONS

6.1. **CONTENT**

6.1.1. The MEU, ASU and WSU Stowage Maps must graphically map out, in separate posters, the locations of all of the items included in:

6.1.1.1. The MEU Enclosure's Ancillary Equipment (A1.2.2.2) and Consumables (A1.2.2.3),

6.1.1.2. The ASU Enclosure's Cold Weather Ancillary Equipment (A1.2.3.2); and

6.1.1.3. The WSU Enclosure's Water Storage Ancillary Equipment (A1.2.4.2)

6.1.2. Items mapped within the Stowage Maps must be identified by item name, MRN, and NATO Stock Number.

6.1.3. If a numbering or other marking scheme is used on shelves or drawers or etc. In the MEU, ASU and WSU Enclosures, this scheme must also be used in the Stowage Maps using the same graphical representation as practical (font, symbology, etc.).

6.2. **GENERAL FORMAT**

6.2.1. The MEU, ASU and WSU Stowage Maps must be prepared as single-sided, single sheet, black and white posters, 11" x 17" (standard US Ledger size).

6.3. **HARD COPY FORMAT**

6.3.1. The MEU, ASU and WSU Stowage Maps must be printed on polyester film (such as Pico Film), 320-370 gsm, matt surface and white.

6.4. **SOFT COPY FORMAT**

6.4.1. The MEU, ASU and WSU Stowage Maps must be provided as PDF or MS Office-compatible files.

6.4.2. **Soft Copy format submission size below 7MB** – MEU, ASU and WSU Stowage Maps may be submitted via email as follows:

6.4.2.1. To Field: As per the related CDRL section 9.A. Addressee, as identified in the contract.

6.4.2.2. Subject Field: WTS-ILS-212 – MEU (or) ASU (or) WSU Stowage Map Poster – [Rev #] – [Date of Issue]

6.4.3. **Soft Copy format submission size at or above 7MB** – The MEU, ASU and WSU Stowage Maps file must be submitted on CD or DVD media and be labelled as follows:

6.4.3.1. Water Treatment System

6.4.3.2. MEU, ASU and WSU Stowage Map Poster

6.4.3.3. WTS-ILS-212;

6.4.3.4. The Revision number, and

6.4.3.5. The date of issue.

## A3.29 **DID – WTU Process and Flow Diagrams**

| DATA ITEM DESCRIPTION | |
|---|---|
| 1. TITLE<br>**WTU Process and Flow Diagrams** | 2. IDENTIFICATION NUMBER<br>DID WTS-ILS-213 |
| 3. DESCRIPTION<br>WTU Process and Flow (P&F) Diagrams show, in poster form, the complete routing of any and all fluids involved in the various water treatment processes through the components of the WTU. | |
| 4. RELATED DOCUMENTS | 5. CONTRACT REFERENCE<br>SOW: **Paragraph 8.3.1.12.1 (pg. 44)**<br>CDRL: **App. A2.29 (pg. 133)** |

6. PREPARATION INSTRUCTIONS

6.1. **CONTENT**

6.1.1. The P&F Diagrams must show (as applicable to the process and WTU design) the flow of raw water; concentrate; ultra-filtration filtrate; permeate; backwash, etc. for every process available to the WTU user and maintainer, such as:

6.1.1.1. First and second passes;

6.1.1.2. Ultra-filtration backflush, clean, forward flush;

6.1.1.3. Reverse Osmosis single and double pass; membrane exercising;

6.1.1.4. WTU Preservation

6.1.2. Each process from 6.1.1 above must have a P&F Diagram on their own page;

6.1.3. Each P&F Diagram must:

6.1.3.1. Show all of the WTU components involved in fluid flow, regardless of their involvement in the process being described, in roughly the same layout and relative location as in the actual WTU as practical;

6.1.3.2. Have the involved fluid flows colour-coded by type. This colour code must be identical between P&F Diagrams;

6.1.3.3. Use simplified symbols for the active components (valves, pumps, gauges), labelled for easy location of the corresponding components within the WTU.

6.1.3.4. Have a symbols legend on each P&F diagram.

6.2. **GENERAL FORMAT**

6.2.1. The WTU Process and Flow Diagrams must be prepared in the Contractor's format in standard US Ledger paper size (11" x 17"), landscape orientation.

6.3. **HARD COPY FORMAT**

6.3.1. The accepted WTU Process and Flow Diagrams hard copies must be:

6.3.1.1. Printed on 320-370 gsm polyester film (such as Pico Film), matt surface and white;

6.3.1.2. Bound with white or black spiral PVC coil (such as such as PLASTIKOIL®) on the long edge, with images oriented so that no booklet rotation is necessary to read both the upper and lower P&F diagrams when the booklet is open.

6.4. **SOFT COPY FORMAT**

6.4.1. The WTU Process and Flow Diagrams must be provided as PDF and native formats.

6.4.2. **Soft Copy format submission size below 7MB** – The WTU Process and Flow Diagrams may be submitted via email as follows:

6.4.2.1. To Field: As per the related CDRL section 9.A. Addressee, as identified in the contract.

6.4.2.2. Subject Field: WTS-ILS-213 – WTU Process and Flow Diagrams – [Rev #] – [Date of Issue]

6.4.3. **Soft Copy format submission size at or above 7MB** – The WTU Process and Flow Diagrams file must be submitted on CD or DVD media and be labelled as follows:

6.4.3.1. Water Treatment System

6.4.3.2. WTU Process and Flow Diagrams

6.4.3.3. WTS-ILS-213;

6.4.3.4. The Revision number, and

6.4.3.5. The date of issue.

## A3.30 **DID – Provisioning Parts Breakdown**

| DATA ITEM DESCRIPTION | |
|---|---|
| 1. TITLE<br>**Provisioning Parts Breakdown** | 2. IDENTIFICATION NUMBER<br>DID WTS-ILS-214 |
| 3. DESCRIPTION<br>The Provisioning Parts Breakdown (PPB) is a top-down breakdown of the equipment in the configuration in which it is being procured. This breakdown is accomplished by listing all parts included in the end item in a lateral and descending family tree/generation breakdown. In this breakdown, all assemblies, subassemblies and parts are listed in relation to the next higher assembly. This relationship is shown by means of an indention code as illustrated in the top-down breakdown sequence. For example, an assembly with indention code B must be followed by a detailed breakdown of all the subsequent indention codes pertaining to that assembly before the next indention code B assembly (if any) is, in turn, broken down. | |
| 4. RELATED DOCUMENTS<br>**D-01-100-214/SF-000** *Specification for Preparation of Provisioning Documentation for Canadian Forces Equipment* | 5. CONTRACT REFERENCE<br>SOW: **Paragraph 8.4.3.1.1 (pg. 47)**<br>CDRL: **App. A2.30 (pg. 134)** |

6 PREPARATION INSTRUCTIONS

6.1 **CONTENT**

6.1.1 The PPB must contain data as per Table 1 below that supersedes Figures 1 and 5 in D-01-100-214/SF-000.

6.1.2 The PPB attaching parts and fasteners, given a “Y” indention code, must immediately follow the part which they fasten.

6.1.3 Common fasteners and hardware must have an Item Name that describes their key characteristics so that equivalents can be identified from alternate sources. Example: “Hex Head Screw M8 x 1.25 mm, 30 mm Long, 18-8 SS”

6.1.4 The PPB Data Field definitions can be found at section 3.9.4 of the D-01-100-214/SF-000 specification. The following override applies: *Expanded Description (SPTD)* must contain the line item’s applicable SPTD filename (see A3.31).

6.1.5 For clarity:

6.1.5.1 *Contractor’s Part Number* refers only to the Contractor which DND has contracted to supply the equipment; data from sub-contractors for items that they did not manufacture or do not control are not permitted. This field may be left blank if no data is available, or if it is the same as the MRN.

6.1.5.2 *Quantity per Assembly (QPA)* refers to the number of times the item is used in the next higher assembly. For example, a C-level item’s QPA will show the number of times it is used in its related B-level assembly, without being multiplied by the number of B-level assemblies.

6.1.5.3 *Quantity per Equipment* (QPE) refers to the total number of times the item is used in the whole prime equipment (A-level). If that quantity exceeds 99999, the figure will show 99999 in the field, with the true quantity (if known) shown in the *Expanded Description* field.

6.1.5.4 *NCAGE* codes can be searched for or requested via the NATO portal: https://eportal.nspa.nato.int/AC135Public/scage/CageList.aspx .

**TABLE 1**

| DATA FIELDS REQUIRED | Field Length |
|---|---|
| Item Number | 6 |
| Indention Code | 1 |
| Item Name | 32 |
| MRN | 30 |
| NCAGE | 5 |
| Contractor's Part Number | 30 |
| NATO Stock Number | 16 |
| Quantity Per Assembly (QPA) | 4 |
| Quantity Per Equipment (QPE) | 5 |
| Standard Unit Price | 9 |
| Unit Of Issue | 2 |
| Reparability Indicator (REP) | 1 |
| Government Supplied Material (GSM) | 1 |
| Procurement Lead Time (PLT) | 3 |
| Shelf Life | 2 |
| Usage Rate | 5 |
| Recommended Buy Quantity | 8 |
| SMR Code | 5 |
| Expanded Description | 34 |
| Expanded Description (SPTD) | 74 |

6.1.6 The Source Maintenance and Recoverability (SMR) Codes are used to communicate maintenance and supply instructions to the various logistic support levels and user organizations for the logistic support of systems, equipment, and end items. The PPB SMR Codes must be chosen from the following list:

| SMR Field Position | Code | Application/Explanation |
|---|---|---|
| First and Second Position Source Codes | PA | Item procured and stocked for anticipated or known usage. Items are normally considered for replenishment |
| | PC | Item procured and stocked, but is deteriorative in nature. |
| | PF | Support equipment which will not be stocked, but which will be centrally procured on demand. |
| | XA | Item is not procured or stocked because the requirements for the item will result in the replacement of the next higher assembly |
| | XC | Installation drawing, diagram, instruction sheet, or field Service drawing, that is identified by the manufacturers' part number. |
| Third Position Maintenance Codes | C | Support item is removed, replaced, used by the operator/crew. |
| | O | Support item is removed, replaced, or used at the Technician Maintenance level. |
| | K | Repairable item. Item is removed, replaced, or used at contractor facility. |
| Fourth Position Repair Codes | C | The lowest maintenance activity capable of complete repair of the support item is the operator/crew. |
| | O | The lowest maintenance activity capable of complete repair of the support item is the Technician Maintenance level. |
| | K | Repairable support item. Complete repair capability exists at a designated contractor facility. |
| | Z | Non-repairable. |
| Fifth Position Recoverability Codes | C | Repairable item. When uneconomically repairable, condemn and disposed by the operator/crew. |
| | Z | Non-repairable item. When item becomes unserviceable, condemn and disposed of by authorized activity. |

| | | |
|---|---|---|
| | O | Repairable item. When uneconomically repairable, condemn and dispose at organizational activity. |
| | K | Repairable item. Condemnation and disposal to be performed at contractor facility. |

6.2 **GENERAL FORMAT**

6.2.1 The PPB must be prepared as an MS Excel spreadsheet.

6.3 **SOFT COPY FORMAT**

6.3.1 **Soft Copy format submission size below 7MB** – The PPB may be submitted via email as follows:

6.3.1.1 To Field: As per the related CDRL section 9.A. Addressee, as identified in the contract.
6.3.1.2 Subject Field: WTS-ILS-214 – PPB – [Rev #] – [Date of Issue]

6.3.2 **Soft Copy format submission size at or above 7MB** - The PPB file must be submitted on CD or DVD media and be labelled as follows:

6.3.2.1 Water Treatment System
6.3.2.2 Provisioning Parts Breakdown;
6.3.2.3 WTS-ILS-214;
6.3.2.4 The Revision number, and
6.3.2.5 The date of issue.

## A3.31 DID – Supplementary Provisioning Technical Documentation

| DATA ITEM DESCRIPTION | |
|---|---|
| 1. TITLE<br>**Supplementary Provisioning Technical Documentation** | 2. IDENTIFICATION NUMBER<br>DID WTS-ILS-215 |
| 3. DESCRIPTION<br>The Supplementary Provisioning Technical Documentation (SPTD) fully identifies and describes part(s) that may be catalogued. | |
| 4. RELATED DOCUMENTS<br>**D-01-100-214/SF-000** *Specification for Preparation of Provisioning Documentation for Canadian Forces Equipment*<br>**D-01-400-001/SG-000** *Standard - Engineering Drawing Practices for Class 1 Drawings and Technical Data List* | 5. CONTRACT REFERENCE<br>SOW: **Paragraph 8.4.3.2.1 (pg. 47)**<br>CDRL: **App. A2.31 (pg. 135)** |

6. **PREPARATION INSTRUCTIONS**

6.1. **CONTENT**

The Supplementary Provisioning Technical Documentation (SPTD) must be provided for each item appearing on the Provisioning Documentation as follows:

6.1.1. The SPTD must include the technical data required for DND to classify and fully describe the item within the NATO codification system, allowing for item identification and cataloguing purposes.

6.1.2. Key elements of good SPTD:

6.1.2.1. Displays the true manufacturing company's logo & address (or NCAGE), and MRN (see D-01-100-214/SF-000 for definitions).

6.1.2.2. Lists characteristic data about the item, such as:

6.1.2.2.1. Configuration;
6.1.2.2.2. Physical characteristics, such as dimensions, tolerances, materiel, mandatory processes, surface finish, protective coatings, etc.;
6.1.2.2.3. Electrical characteristics;
6.1.2.2.4. Performance data;
6.1.2.2.5. Special features which contribute to the uniqueness of the item, especially for common items modified to a particular standard of performance, etc.

6.1.2.3. Clearly shows the item in question.

6.1.2.4. Shows where the item fits in the next higher assembly (where practical).

6.2. **GENERAL FORMAT**

6.2.1. The SPTD must be prepared as black and white line drawing(s) or with good quality photograph(s) within a Technical Datasheet.

6.2.1.1. If prepared as a drawing, the SPTD must follow the drawing format of D-01-400-001/SG-000 section 7.4, with attached parts lists (for assemblies), so that DND can ensure that the Provisioning Documentation reflects the current and complete configuration of the equipment being produced.

6.3. **HARD COPY FORMAT**

6.3.1. The SPTD must be printed on standard US size paper with these characteristics:

6.3.1.1. Weight of no less than 90 gsm;

6.3.1.2. Brightness of no less than 92 ISO brightness;

6.4. **SOFT COPY FORMAT**

6.4.1. The SPTD must be submitted in PDF file type, with filenames in the following format: (MRN_ (NCAGE) _ (item name).pdf.

6.4.2. **Soft Copy format submission size below 7MB** – The SPTD PDFs may be submitted via email as follows:

6.4.2.1. To Field: As per the related CDRL section 9.A. Addressee, as identified in the contract.

6.4.2.2. Subject Field: WTS-ILS-215 – SPTD – [Rev #] – [Date of Issue]

6.4.3. **Soft Copy format submission size at or above 7MB** – The SPTD PDFs must be submitted on CD or DVD media and be labelled as follows:

6.4.3.1. Water Treatment System

6.4.3.2. SPTD;

6.4.3.3. WTS-ILS-215;

6.4.3.4. The Revision number, and

6.4.3.5. The date of issue.

## A3.32 DID – Special Tools and Test Equipment

| DATA ITEM DESCRIPTION | |
|---|---|
| 1. TITLE<br>**Special Tools and Test Equipment** | 2. IDENTIFICATION NUMBER<br>DID WTS-ILS-216 |
| 3. DESCRIPTION<br>The Special Tools and Test Equipment (STTE) provides a list of all special tools and testing equipment required to maintain and operate the equipment. | |
| 4. RELATED DOCUMENTS | 5. CONTRACT REFERENCE<br>SOW: **Paragraph 8.4.3.3.1 (pg. 47)**<br>CDRL: **App. A2.32 (pg. 136)** |

6. PREPARATION INSTRUCTIONS

6.1. **CONTENT**

6.1.1. The STTE must include the following for each item listed:

6.1.1.1. Item Name;

6.1.1.2. Reference (Manufacturer's Part) Number;

6.1.1.3. NSCM/CAGE Code;

6.1.1.4. NSN (if available) or SPTD of item (if NSN is not available);

6.1.1.5. Maintenance Level;

6.1.1.6. Recommended Buy Quantity;

6.1.1.7. Standard Unit Price;

6.1.1.8. Date of First Article Delivery;

6.1.1.9. Picture(s) or Drawing(s) of item; and,

6.1.1.10. Description and Function of STTE

6.1.2. The above STTE item list may be divided into sub-sections such as:

6.1.2.1. Operations Support Equipment;

6.1.2.2. Maintenance Support Equipment;

6.1.2.3. Calibration Equipment;

6.1.2.4. Test, Measurement and Diagnostic Equipment (TMDE):

6.1.2.5. Automatic Test Equipment (ATE) and its Test Program Set (TPS); and

6.1.2.6. Computer Resources Support Requirement.

6.2. **GENERAL FORMAT**

6.2.1. The STTE must be prepared as an MS Excel spreadsheet

6.3. **SOFT COPY FORMAT**

6.3.1. The STTE must be provided as an MS Excel Spreadsheet file.

6.3.2. **Soft Copy format submission size below 7MB** – The STTE may be submitted via email as follows:

6.3.2.1. To Field: As per the related CDRL section 9.A. Addressee, as identified in the contract.

6.3.2.2. Subject Field: WTS-ILS-216 – STTE – [Rev #] – [Date of Issue]

6.3.3. **Soft Copy format submission size at or above 7MB** – The STTE file must be submitted on CD or DVD media and be labelled as follows:

6.3.3.1. Water Treatment System

6.3.3.2. Special Tools and Test Equipment

6.3.3.3. WTS-ILS-216;

6.3.3.4. The Revision number, and

6.3.3.5. The date of issue.

## A3.33 **DID – Equipment Delivery Status Report**

| DATA ITEM DESCRIPTION | |
|---|---|
| 1. TITLE<br>**Equipment Delivery Status Report** | 2. IDENTIFICATION NUMBER<br>DID WTS-ILS-217 |
| 3. DESCRIPTION<br>The Equipment Delivery Status Report (EDSR) will report on the Delivery Status of the WTS and to identify and correct any problems which will adversely affect their timely delivery. | |
| 4. RELATED DOCUMENTS | 5. CONTRACT REFERENCE<br>SOW: **Paragraph 8.4.3.4.1 (pg. 47)**<br>CDRL: **App. A2.33 (pg. 137)** |

6. PREPARATION INSTRUCTIONS

6.1. **CONTENT**

6.1.1. The EDSR must contain the data requested through the column headers of Table 1 shown below, and any added by the Contractor (see 6.2.1).

6.2. **GENERAL FORMAT**

6.2.1. The EDSR must be prepared in a Microsoft Excel spreadsheet containing at least the data columns shown in Table 1 below. At their discretion, the Contractor may add relevant data columns for their purposes and any they believe will be useful in monitoring and reporting the delivery status of the equipment.

6.2.2. Line items in the EDSR must be grouped by destination (Canadian Forces Supply Depots).

6.3. **SOFT COPY FORMAT**

6.3.1. The EDSR must be provided as a MS Excel spreadsheet file.

6.3.2. **Soft Copy format submission size below 7MB** – The EDSR may be submitted via email as follows:

6.3.2.1. To Field: As per the related CDRL section 9.A. Addressee, as identified in the contract.

6.3.2.2. Subject Field: WTS-ILS-217 – EDSR – [Rev #] – [Date of Issue]

6.3.3. **Soft Copy format submission size at or above 7MB** – The EDSR file must be submitted on CD or DVD media and be labelled as follows:

6.3.3.1. Water Treatment System

6.3.3.2. EDSR

6.3.3.3. WTS-ILS-217

6.3.3.4. The Report's Date

Table 1

## Contract Delivery Status Report - WTT

| | | | | | | |
|---|---|---|---|---|---|---|
| | | Contract Number: | W8476-XXXX | | Report Date: | 28/05/2018 |
| | | WTT NSN: | 1000-21-789-7890 | | Next Report: | 26/06/2018 |

| Destination | Line No. | VIN (or S/N) | Status | Anticipated Ship Date: | Actual Ship Date: | Notes |
|---|---|---|---|---|---|---|
| Edmonton (7CFSD) | 1 | 2ASD-100 | Shipped | 25/05/2018 | 26/05/2018 | Invoice # L1022, 30/05/2018 |
| | 2 | 2ASD-101 | Ready to ship | 01/06/2018 | | Invoice # L1024, 09/06/2018 |
| | 3 | 2ASD-102 | Ready to ship | 01/06/2018 | | Invoice # L1024, 09/06/2018 |
| | 4 | 2ASD-103 | In Production | 16/06/2018 | | |
| | 5 | 2ASD-104 | In Production | 16/06/2018 | | |
| | 6 | 2ASD-105 | In Production | 16/06/2018 | | |
| | 7 | 2ASD-106 | In Production | 16/06/2018 | | |
| | 8 | 2ASD-107 | In QA | 10/06/2018 | | On track to ship |
| | 9 | 2ASD-108 | In QA | 10/06/2018 | | On track to ship |
| Montreal (25CFSD) | 10 | 2ASD-109 | Prod: July 2018 | 18/08/2018 | | May be delayed due to part back order |
| | 11 | 2ASD-110 | Prod: July 2018 | 18/08/2018 | | May be delayed due to part back order |
| | 12 | 2ASD-111 | Prod: July 2018 | 18/08/2018 | | May be delayed due to part back order |
| | 13 | 2ASD-112 | Prod: July 2018 | 18/08/2018 | | May be delayed due to part back order |
| | 14 | 2ASD-113 | Prod: Aug 2018 | 23/09/2018 | | |
| | 15 | 2ASD-114 | Prod: Aug 2018 | 23/09/2018 | | |
| | 16 | 2ASD-115 | Prod: Aug 2018 | 23/09/2018 | | |
| | 17 | 2ASD-116 | Prod: Aug 2018 | 23/09/2018 | | |

## A3.34 DID – Identification Plates – Design Template & Populated Designs

| DATA ITEM DESCRIPTION | |
|---|---|
| 1. TITLE<br>**Identification Plates – Design Template & Populated Designs** | 2. IDENTIFICATION NUMBER<br>DID WTS-ILS-218 |
| 3. DESCRIPTION<br>The Identification Plates uniquely identify equipment and components and spares based on the procedures governing the identification marking of Canadian military property. | |
| 4. RELATED DOCUMENTS<br>**D-02-002-001/SG-001** *Canadian Forces Standard Identification Marking of Canadian Military Property*<br>**D-01-400-002/SF-000** *Specification for Levels of Engineering Drawings and Associated Lists* | 5. CONTRACT REFERENCE<br>SOW: **Paragraph 8.7.1 (pg. 48)**<br>CDRL: **App. A2.34 (pg. 138)** |

6. PREPARATION INSTRUCTIONS

6.1. **CONTENT AND GENERAL FORMAT**

6.1.1. IAW D-02-002-001/SG-001, the Identification Plates affixed to each item included in Annex A, SOW paragraph 8.7.2 must be of size, format, and construction appropriate for the item being identified, and contain the data required for those Identification Plate formats in both official languages.

6.1.2. The Identification Plates Design Template & Populated Designs must be prepared as representative Level 2 drawings (see D-01-400-002/SF-000).

6.1.2.1. The Level 2 drawings must include the mounting or installation method for each Identification Plate, with any fasteners described by size, and/or technical standard, and/or NSN, and quantity.

6.2. **HARD COPY FORMAT**

6.2.1. The Identification Plates Design Template & Populated Designs must be:

6.2.1.1. Printed in 1:1 scale;

6.2.1.2. Printed on Standard US Ledger size paper (432 mm x 279 mm), with a:

6.2.1.2.1. Weight of no less than 90 gsm;

6.2.1.2.2. Brightness of no less than 92 ISO brightness;

6.3. **SOFT COPY FORMAT**

6.3.1. The Identification Plates Design Template & Populated Designs must be provided as PDF files, labelled by [Item Name][MRN].pdf.

6.3.2. The Identification Plates Design Template and Populated Designs PDFs containing text and illustrations in landscape, must be rotated for electronic viewing and reading in landscape.

6.3.3. **Soft Copy format submission size below 7MB** – The Identification Plates Design Template & Populated Designs may be submitted via email as follows:

6.3.3.1. To Field: As per the related CDRL section 9.A. Addressee, as identified in the contract.

6.3.3.2. Subject Field: WTS-ILS-218 – Identification Plates – [Rev #] – [Date of Issue]

6.3.4. **Soft Copy format submission size at or above 7MB** – The Identification Plates Design Template & Populated Designs file must be submitted on CD or DVD media and be labelled as follows:

6.3.4.1. Water Treatment System

6.3.4.2. Identification Plates

6.3.4.3. WTS-ILS-218;

6.3.4.4. The Revision number, and

6.3.4.5. The date of issue.

## A3.35 DID – Controlled & Non-Controlled Goods List

| DATA ITEM DESCRIPTION | |
|---|---|
| 1. TITLE<br>**Controlled & Non-Controlled Goods List (CNCGL)** | 2. IDENTIFICATION NUMBER<br>DID WTS-ILS-219 |
| 3. DESCRIPTION<br>Controlled Goods Items – The CNCGL identifies if the controlled goods end items, components and sub-components of the equipment are specifically designed and modified for military purpose, and provides the Demilitarization Instructions if required.<br>Non-Controlled Goods Items – The CNCGL still includes non-controlled goods end items, components and sub-components of the equipment, as they will still require a DMC code assignment. | |
| 4. RELATED DOCUMENTS<br>**C-02-007-000/AG-001** *Controlled Technology Access and Transfer (CTAT) Manual* | 5. CONTRACT REFERENCE<br>SOW: **Paragraph 8.8.1 (pg. 48)**<br>CDRL: **App. A2.35 (pg. 139)** |

6. PREPARATION INSTRUCTIONS

6.1. **CONTENT**

6.1.1. The CNCGL must identify end items accordingly, IAW C-02-007-000/AG-001:

6.1.1.1. For Canadian origin items, Canada's Export Control List (ECL) articles that apply IAW the Defence Product Act (DPA);

6.1.1.2. For US origin dual use, the Export Control Classification Number (ECCN) of the Commerce Control List that applies;

6.1.1.3. For US origin controlled goods also known as defence articles, the United States Munitions List (USML) Category and paragraph that apply IAW the International Traffic in Arms Regulations (ITAR);and

6.1.1.4. For all other countries other than Canada and the USA, the category and article of the Wassenaar Control List that applies.

6.1.1.5. All items require a Demilitarization Code (DMC).

6.2. **GENERAL FORMAT**

6.2.1. The CNCGL must be in spreadsheet format with 6 columns:

6.2.1.1. Item name;

6.2.1.2. Ref paragraph for Canadian origin items (ECL);

6.2.1.3. Ref paragraph for US origin controlled goods (USML);

6.2.1.4. Demilitarization Code (DMC);

6.2.1.5. Formal Demilitarisation Instructions, if DMC is F;

6.2.1.6. Remarks.

6.3. **HARD COPY FORMAT**

6.3.1. The CNCGL must be printed on paper with these characteristics:

6.3.1.1. Weight of no less than 90 gsm;

6.3.1.2. Brightness of no less than 92 ISO brightness;

6.4. **SOFT COPY FORMAT**

6.4.1. The CNCGL must be provided as an MS Excel Spreadsheet file.

6.4.2. **Soft Copy format submission size below 7MB** – The CNCGL may be submitted via email as follows:

6.4.2.1. To Field: As per the related CDRL section 9.A. Addressee, as identified in the contract.

6.4.2.2. Subject Field: WTS-ILS-219 – CNCGL – [Rev #] – [Date of Issue]

6.4.3. **Soft Copy format submission size at or above 7MB** – The CNCGL file must be submitted on CD or DVD media and be labelled as follows:

6.4.3.1. Water Treatment System

6.4.3.2. CNCGL

6.4.3.3. WTS-ILS-219;

6.4.3.4. The Revision number, and

6.4.3.5. The date of issue.

## A3.36 DID – Identification Labels for Storage and Shipment and Packaging Codes

### DATA ITEM DESCRIPTION

| 1. TITLE | 2. IDENTIFICATION NUMBER |
|---|---|
| **Identification Labels for Storage and Shipment and Packaging Codes** | DID WTS-ILS-220 |

3. DESCRIPTION

The Identification Labels for Storage and Shipment (ILSS) and Packaging Codes ensures that the labelling used to identify packages for items procured by DND and shipped to and stored at a Canadian facility comply with CAF Specifications. As well, this will allow DND to obtain a complete record of packaging codes for catalogued items of the equipment.

| 4. RELATED DOCUMENTS | 5. CONTRACT REFERENCE |
|---|---|
| **D-LM-008-011/SF-001** *Preparation and Use of Packaging Requirements Codes*<br>**D-LM-008-002/SF-001** *Specification for Marking for Storage and Shipment*<br>**D-01-400-002/SF-000** *Levels of Engineering Drawings and Associated Lists*<br>**CF271** DND Form *Packaging Data* | SOW: **Paragraph 8.9.3 (pg. 49)**<br>CDRL: **App. A2.36 (pg. 140)** |

6. PREPARATION INSTRUCTIONS

6.1. **CONTENT AND GENERAL FORMAT**

6.1.1. The ILSS designs, populated with the appropriate data, must be provided as Level 1 drawings (see D-01-400-002/SF-000) and include dimensions to show the measurements as defined by D-LM-008-002/SF-001 (example: text size, bar code dimensions).

6.1.2. A separate Packaging Code (CF271 Form) must be provided electronically for each item that:

6.1.2.1. Requires special packaging, packing, or preservation considerations to meet the required protection level (see 4.7.1 of the SOW), as per D-LM-008-011/SF-001 (see Table 1 below); and,

6.1.2.2. Has a NATO Stock Number (NSN).

6.1.3. The CF271 forms' file name must correspond to the item listed within, either by its part number or NSN (example: CF271 9422-01-552-8836.xls).

6.2. **HARD COPY FORMAT**

6.2.1. The ILSS designs must be printed on paper with these characteristics:

6.2.1.1. Standard US Ledger size (432 mm x 279 mm)
6.2.1.2. Weight of no less than 90 gsm;
6.2.1.3. Brightness of no less than 92 ISO brightness;

6.3. **SOFT COPY FORMAT**

6.3.1. The ILSS must be provided as PDF files.

6.3.2. The ILSS PDFs containing text and illustrations in landscape, must be rotated for electronic viewing and reading in landscape.

6.3.3. The CF271 Packaging Codes must be provided as an MS Excel Spreadsheet file.

6.3.4. **Soft Copy format submission size below 7MB** – The ILSS and Packaging Codes must be submitted via email as follows:

6.3.4.1. To Field: As per the related CDRL section 9.A. Addressee, as identified in the contract.

6.3.4.2. Subject Field: WTS-ILS-220 – Identification Labels for Storage and Shipment and Packaging Codes – [Rev #] – [Date of Issue]

6.3.5. **Soft Copy format submission size at or above 7MB** – The ILSS and Packaging Codes files must be submitted on CD or DVD media and be labelled as follows:

6.3.5.1. Water Treatment System
6.3.5.2. Identification Labels for Storage and Shipment and Packaging Codes
6.3.5.3. WTS-ILS-220;
6.3.5.4. The Revision number, and
6.3.5.5. The date of issue.

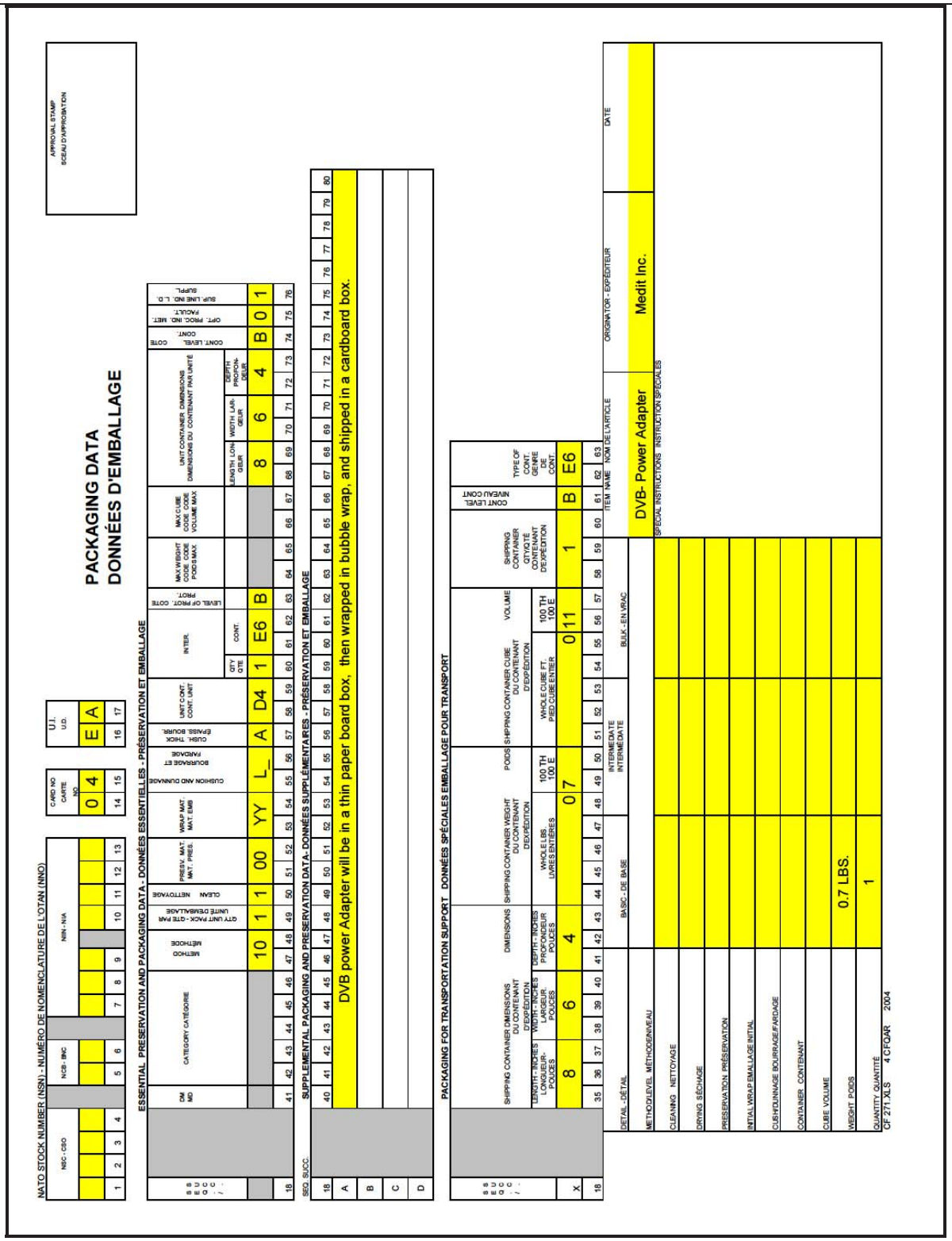


**Table 1: Sample CF271 form**

## A3.37 DID – List of Items to be Supported

| DATA ITEM DESCRIPTION | |
|---|---|
| 1. TITLE<br>**List of Items to be Supported** | 2. IDENTIFICATION NUMBER<br>DID WTS-ILS-221 |
| 3. DESCRIPTION<br>The List of Items to be Supported (LIS) will provide the repairable/consumable item data, software items and technical data, which will be supported once the system is delivered. DND will use this information, along with the provisioning data, to populate the Support SOW Appendix A1.0 tables. | |
| 4. RELATED DOCUMENTS | 5. CONTRACT REFERENCE<br>SOW: **Paragraph 8.10.1 (pg. 49)**<br>CDRL: **App. A2.37 (pg. 141)** |

6. PREPARATION INSTRUCTIONS

6.1. **CONTENT**

6.1.1. The LIS must provide an overview and understanding to DND on how the WTS and its associated equipment will be supported once the WTS is delivered; refer to the Support SOW for further information.

6.1.2. The LIS must provide the following completed tables, stemming from the Concept of Operation & Support (IAW the Support SOW), and IAW the **Maintenance Concept** ANNEX A paragraph 8.1 (pg. 42):

6.1.2.1. Supported Repairable-Consumable Equipment and Spares Table – This includes the repairable equipment or components of the complete system, STTE, and consumable equipment.

6.1.2.2. Supported Software Items Table – This includes all provided software, such as software resident in the Repairable Items or information systems.

6.1.2.3. Supported Technical Data Table – This includes the Technical Data and publications, and training material for which the Contractor will provide support.

6.2. **GENERAL FORMAT**

6.2.1. The LIS must be prepared as an MS Word document with tables.

6.3. **SOFT COPY FORMAT**

6.3.1. The LIS must be provided as an MS Word file.

6.3.2. **Soft Copy format submission size below 7MB** – The LIS may be submitted via email as follows:

6.3.2.1. To Field: As per the related CDRL section 9.A. Addressee, as identified in the contract.

6.3.2.2. Subject Field: WTS-ILS-221 – LIS – [Rev #] – [Date of Issue]

6.3.3. **Soft Copy format submission size at or above 7MB** – The LIS file must be submitted on CD or DVD media and be labelled as follows:

6.3.3.1. Water Treatment System

6.3.3.2. LIS

6.3.3.3. WTS-ILS-221;

6.3.3.4. The Revision number, and

6.3.3.5. The date of issue.

## Supported Repairable-Consumable Equipment and Spares Table

An explanation of each column is detailed below: Note: Column 1 through 5 are standard, and will apply to all Support SOWs; columns 6 through 8 are optional and should be tailored or removed as needed once the Support concept and Support SOW are written.

1. System Identifier MRN/OEM Part No – A unique identifier for the Item, as used in the applicable technical manuals or supply management system.

2. Item Nomenclature – The name of the Item that may include Item class/group categories and functional descriptors.

3. NATO Stock Number (NSN) – The 13-digit identifier used in NATO and allied cataloguing systems. The NSN will be included if the Item is to be ordered by DND.

4. Regular or Free-Flow R&O by Item

   Repair Cost Estimate (RCE) – Identifies that the item will require a cost estimate before repairs or overhaul can begin.

   > This is used for regular R&O when equipment is more complex so the TA requires more visibility on what is being proposed, has not yet reached steady-state and is therefore harder to predict typical repair costs/requirements, and repairs occur infrequently.

   Maximum Repair Cost (MRC) – Identifies the maximum amount authorized that includes all labour and material costs, to be expended to repair an item. Repairs above the MRC must be approved by DND before any repair or overhaul work commences. Standard Selection Notice Observation Message procedures as detailed in A-LM-184-001/JS-001 must apply.

   > This is used for free-flow R&O when equipment repairs are well understood or are less complex, and is used for repairs that occur at a high rate.

5. Repair Turn-Around-Time (TAT) – Identifies the Repair TAT, if different from the general Repair TAT, as defined in Support SOW, indicating that this item is of greater importance to the operation of the WTS and therefore requires a faster turn-around. Repair TAT is indicated in calendar days; if left blank, then general Repair TAT is followed.

6. Fleet Support Spares (FSS) quantity to hold – Describes the quantity of each item that the Contractor will hold and maintain, or left blank, if item does NOT have a required sparing level quantity or category isn't applicable.

   FSS are used to support the fleet, both domestically or while on deployment, and can be used by Contractor FSRs during repair tasking, for faster TAT during R&O, and in 'repair by replacement' situations, where the repair can be done in the field or when parts are required so rarely that they would not be stocked in depot, and the cost is minimal compared to the transport cost of shipping equipment back for R&O Maintenance Support at the Contractor's site.

7. Operational Spares Kits – Base Operating Spares Kit (BOSK) – Describes the collection of operational deployment spares, and quantities of each item, held in reserve in pre-positioned storage. If left blank the item is not included in the operational spares kits or category isn't applicable.

   BOSK(s) are held domestically with DART at CFB Trenton, and in operation will be deployed to a base which supports the forward deployments.

8. Detailed Inspection & Maintenance / Detailed Inspection & Equipment Rotation – Indicates which items will require a detailed inspection and maintenance / detailed inspection & equipment rotation, performed by the Contractor, following the manufacturer's instructions for use and inspection.

a. Detailed Inspection & Maintenance (Insp. Maint.)
   i. 'Y – WTS Equip. QTY' = yes, detailed inspection & maintenance required for the listed quantity of WTS Equipment.
b. 'N' or blank = no.

**NOTE:** INFORMATION IN THIS TABLE WILL BE FINALIZED AFTER DELIVERY AND ACCEPTANCE OF THE PROVISIONING DOCUMENTATION.

| Item Identifier MRN/OEM Part No. (1) | Item Nomenclature (2) | NSN (if item can be ordered) (3) | Regular or Free-Flow RCE/MRC (4) | Repair TAT (cal. Days) (5) | Fleet Support Spares (Qty. to hold) (6) | Operational Spares Kits (7) BOSK Qty. | Insp. Maint. (Y – WTS Equip. QTY) (8) |
|---|---|---|---|---|---|---|---|
| | Water Treatment Unit (WTU) | | RCE | | | | Y – Qty 40 in: 37 CER, 36 CER, 35 RGC, 34 RGC, and 33 CER, 32 CER, 31 CER, 38 CER, 41 CER, and 39 CER. |
| | Miscellaneous Equipment Unit (MEU) | | RCE | | | | Y – Qty 40 in: 37 CER, 36 CER, 35 RGC, 34 RGC, and 33 CER, 32 CER, 31 CER, 38 CER, 41 CER, and 39 CER. |
| | Trailer | | RCE | | | | Y – Qty 40 in: 37 CER, 36 CER, 35 RGC, 34 RGC, and 33 CER, 32 CER, 31 CER, 38 CER, 41 CER, and 39 CER. |
| | Arctic Sustainment Unit (ASU) | | RCE | | | | Y – Qty 4 in Contractor Facility |
| | Water Storage Unit (WSU) | | RCE | | | | |
| **Ancillary Equipment:** | | | | | | | |
| | Feed Water Hose | | | | 3 | 1 | |
| | Concentrate Water Hose | | | | 3 | 1 | |
| | Potable Water Hose | | | | 6 | 2 | |
| | Water Distribution Nozzle | | | | 6 | 2 | |
| | Feed Pump | | | | 6 | 2 | |
| | Distribution Pump | | | | 6 | 2 | |
| | Water Storage Tank | | | | 6 | 2 | |
| | Spill Kit | | | | 6 | 2 | |

| Item Identifier MRN/OEM Part No. (1) | Item Nomenclature (2) | NSN (if item can be ordered) (3) | Regular or Free-Flow RCE/MRC (4) | Repair TAT (cal. Days) (5) | Fleet Support Spares (Qty. to hold) (6) | Operational Spares Kits (7) BOSK Qty. | Insp. Maint. (Y – WTS Equip. QTY) (8) |
|---|---|---|---|---|---|---|---|
| | Intake Strainer Assembly | | | | 6 | 2 | |
| | Exhaust Hose for Generator Set | | | | 3 | 1 | |
| | Life Preserver Vest | | | | 3 | 1 | |
| | Wading Overall | | | | 3 | 1 | |
| | Water Testing Kit, Chemical Agent | | | | 3 | 1 | |
| | Water Quality Analysis Kit | | | | 3 | 1 | |
| | Turbidity Verification Kit | | | | 3 | 1 | |
| **Cold Weather Ancillary Equipment:** | | | | | | | |
| | Electrically-Heated Feed Water Hoses | | | | 3 | 1 | |
| | Electrically-Heated Concentrate Hoses | | | | 3 | 1 | |
| | Electrically-Heated Potable Water Hoses | | | | 6 | 2 | |
| | Feed Water Pump Electrically-Heated Blanket | | | | 6 | 2 | |
| | Distribution Pump Electrically-Heated Blanket | | | | 6 | 2 | |
| | Cold Weather Shelter | | | | 4 | 1 | |
| | Heater | | | | 4 | 1 | |
| **Trailer Electrical Components:** | | | | | | | |
| | Front Harness | | | | 10 | 4 | |
| | Mid Main Harness | | | | 5 | 2 | |
| | Rear Harness | | | | 5 | 2 | |
| | LED Markers | | | | 20 | 5 | |
| | LED SMP Taillight | | | | 30 | 6 | |
| | LED Licence Plate Lamp | | | | 10 | 3 | |
| **Trailer Axle Components:** | | | | | | | |
| | Axle Assembly | | | | 4 | 1 | |
| | Wheel Assembly | | | | 10 | 3 | |
| | Tire | | | | 20 | 6 | |
| | Wheel Bearings | | | | 20 | 6 | |
| **Trailer Brake Components:** | | | | | | | |
| | Brake Drum | | | | 10 | 4 | |
| | Brake Shoe | | | | 40 | 12 | |
| | Air Chamber | | | | 20 | 8 | |

| Item Identifier MRN/OEM Part No. (1) | Item Nomenclature (2) | NSN (if item can be ordered) (3) | Regular or Free-Flow RCE/MRC (4) | Repair TAT (cal. Days) (5) | Fleet Support Spares (Qty. to hold) (6) | Operational Spares Kits (7) BOSK Qty. | Insp. Maint. (Y – WTS Equip. QTY) (8) |
|---|---|---|---|---|---|---|---|
| | Air Reservoir | | | | 4 | 2 | |
| | Coiled Air Hose | | | | 20 | 8 | |
| | Function Valve | | | | 4 | 2 | |
| | Brake Adjusters | | | | 10 | 4 | |
| **Trailer Suspension Components:** | | | | | | | |
| | Spring Assembly | | | | 10 | 4 | |
| | Shock Absorber | | | | 16 | 8 | |
| **Trailer Structural Frame:** | | | | | | | |
| | Landing Gear | | | | 8 | 2 | |
| | Drawbar Assembly | | | | 4 | 1 | |

**Supported Software Items Table**

An explanation of each column is detailed below: Note: Column 1 through 3 are standard, and will apply if there is software to support, columns 4 through 5 are optional and should be tailored or removed as needed once the Support concept and Support SOW is written.

1. Identifier MRN/OEM Part No – A unique identifier for the Item of software, or the hardware that it is hosted on.

2. Item Nomenclature – The name of the Item that may include Item class/group categories and functional descriptors.

3. Software version number – The version or revision number of the software item.

4. SW Update – Requires software updates to DND/CAF (e.g., may be part of regular upgrade program or to incorporate third party updates) IAW the Support SOW ('Y' = yes, 'N' or blank = no).

5. Help Desk – Included with Help Desk support for DND/CAF, IAW the Support SOW, for this software ('Y' = yes, 'N' or blank = no).

**NOTE:** INFORMATION IN THIS TABLE WILL BE FINALIZED AFTER DELIVERY AND ACCEPTANCE OF THE TECHNICAL PUBLICATIONS.

| Identifier MRN/OEM Part No. (1) | Item Nomenclature (2) | Software Version Number (3) | SW Update (Y/N) (4) | Help Desk (Y/N) (5) |
|---|---|---|---|---|
| | | | | |
| | | | | |

| Identifier MRN/OEM Part No. (1) | Item Nomenclature (2) | Software Version Number (3) | SW Update (Y/N) (4) | Help Desk (Y/N) (5) |
|---|---|---|---|---|
| | | | | |

**Supported Technical Data Table**

An explanation of each column is detailed below: Note: include all the technical publications and other relevant ILS documents from the SOW that you want the Support Contractor to maintain up to date after configuration management changes or obsolescence.

1. Publication Number – The unique identifier for the published Item of Technical Data.
2. Title – The title of the item of Technical Data.

**NOTE:** INFORMATION IN THIS TABLE WILL BE FINALIZED AFTER DELIVERY AND ACCEPTANCE OF THE TECHNICAL PUBLICATIONS.

| Publication Identifier (1) | Title (2) |
|---|---|
| TBD | WTS OPERATOR MANUAL |
| TBD | WTU OPERATOR QUICK REFERENCE CARD |
| TBD | WTS MAINTENANCE MANUAL |
| TBD | WTS PERMISSIVE REPAIR SCHEDULE AND STANDARD REPAIR TIMES |
| TBD | WTS ILLUSTRATED PARTS MANUAL |
| TBD | WTS OPERATOR TRAINING PACKAGE |
| TBD | WTU AND ASU TECHNICIAN TRAINING PACKAGE |
| TBD | WTS PRESERVATION, STORAGE AND REACTIVATION INSTRUCTIONS |
| TBD | WTS STOWAGE, SHIPPING, AND HANDLING INSTRUCTIONS |
| TBD | WTS DATA SUMMARY |
| TBD | MEU AND ASU STOWAGE MAP POSTERS |
| TBD | WTU PROCESS AND FLOW DIAGRAMS |
| TBD | PROVISIONING PARTS BREAKDOWN |
| TBD | SUPPLEMENTARY PROVISIONING TECHNICAL DOCUMENTATION |
| TBD | SPECIAL TOOL & TESTING EQUIPMENT |
| TBD | IDENTIFICATION PLATES |
| TBD | CONTROLLED & NON-CONTROLLED GOODS LIST |
| TBD | IDENTIFICATION LABELS FOR STORAGE AND SHIPMENT AND PACKAGING CODES |

## A3.38 **DID – Warranty Support Plan**

| DATA ITEM DESCRIPTION | |
|---|---|
| 1. TITLE<br>**Warranty Support Plan** | 2. IDENTIFICATION NUMBER<br>DID WTS-ILS-222 |
| 3. DESCRIPTION<br>The Warranty Support Plan (WSP) identifies and documents the elements that compose the Warranty Support for the WTS, and provides the framework and strategy to meet Warranty Support obligations. | |
| 4. RELATED DOCUMENTS | 5. CONTRACT REFERENCE<br>SOW: **Paragraph 8.12.1 (pg. 50)**<br>CDRL: **App. A2.38 (pg. 142)** |

6. PREPARATION INSTRUCTIONS

6.1. **CONTENT**

6.1.1. The Warranty Support Plan's (WSP) subject matter must include, but not be limited to, a detailed discussion on the following:

6.1.1.1. An introduction with a stated purpose and scope.

6.1.1.2. A description of the warranty section. A key point of contact with the Contractor for warranty support matters must be identified.

6.1.1.3. Detailed summary of what is covered under the WTS's standard warranty including applicable terms and conditions, such as parts and labour, time, usage, and maintenance servicing requirements.

6.1.1.4. Complete warranty control procedures including, but not necessarily limited to, the following:

6.1.1.4.1. Interfacing actions between Contractor and Canada for initiating a warranty action and shipping instructions;

6.1.1.4.2. Procedures followed for the evaluation of defective warrantable items, including ILS publications;

6.1.1.4.3. Procedures to be followed where warranty claims are not substantiated, but DND elects to have the item repaired and returned to service by the Contractor;

6.1.1.4.4. Details relating to the Contractor's disposal of unserviceable warrantable components;

6.1.1.4.5. All costs that are associated with the program must be identified, including a method of compensating DND for effecting warranty repairs on the Contractor's behalf;

6.1.1.4.6. How the Contractor will notify Canada of recalls, emerging safety issues, and other urgent matters the Contractor gains knowledge of concerning the Work.

6.1.1.4.7. How the Contractor will report and correct discrepancies or amend information within the ILS documentation and the dissemination of those amendments and corrections; and,

6.1.1.4.8. How the Contractor will report all closed warranty claims and the status of open claims.

6.1.1.5. Terms and conditions of the packaging warranty coverage;

6.1.1.6. Details of the process (detailed steps) to be followed to action a warranty claim for repairs performed by the contractor;

6.1.2. Each topic of discussion must be addressed in a manner that clearly identifies any documentation or information required from DND.

6.1.3. Any documentation used in Warranty Support activities must be identified and templates included as part of the Warranty Support Plan as Appendices.

6.2. **GENERAL FORMAT**

6.2.1. The WSP must be prepared in the Contractor's format.

6.3. **HARD COPY FORMAT**

6.3.1. The WSP must be printed on paper with these characteristics:

6.3.1.1. Weight of no less than 90 gsm;

6.3.1.2. Brightness of no less than 92 ISO brightness;

6.4. **SOFT COPY FORMAT**

6.4.1. The WSP must be provided as

6.4.2. **Soft Copy format submission size below 7MB** – The WSP may be submitted via email as follows:

6.4.2.1. To Field: As per the related CDRL section 9.A. Addressee, as identified in the contract.

6.4.2.2. Subject Field: WTS-ILS-222 – Warranty Support Plan – [Rev #] – [Date of Issue]

6.4.3. **Soft Copy format submission size at or above 7MB** – The WSP file must be submitted on CD or DVD media and be labelled as follows:

6.4.3.1. Water Treatment System

6.4.3.2. Warranty Support Plan

6.4.3.3. WTS-ILS-222;

6.4.3.4. The Revision number, and

6.4.3.5. The date of issue.

# A4.0 APPENDIX: COMMERCIAL (OEM) ENGINEERING DRAWINGS AND ASSOCIATED LISTS

## A4.1 General

A4.1.1 The Contractor must provide Engineering Drawings, Associated Lists and Reference Documents IAW the following requirements and in the final form specified below.

A4.1.2 **Technical Data Action Notice (TDAN) Number**

A4.1.2.1 A TDAN number will be assigned to control the acquisition of all Engineering Drawings and Associated Lists produced under this contract. TDAN numbers will be assigned upon request by DSCO 4-6 individually as required.

A4.1.3 **New and Existing Drawings**

A4.1.3.1 When required, the Contractor must prepare and deliver new Engineering Drawings and Associated Lists which meet the design disclosure and legibility requirements of the specified level as defined by the Canadian Forces Engineering Drawings and Associated Lists specification D-01-400-002/SF-000.

A4.1.3.2 Existing Contractor Drawings being provided as part of the Engineering Drawing Package must meet the requirements of paragraph 3.2 of D-01-400-002/SF-000. In the event that Contractor Drawings do not meet the specified requirements the Contractor must rework the drawings to ensure that the requirements are met.

A4.1.3.3 Drawing Levels

A4.1.3.3.1 Level 1 – Conceptual and Developmental Design

A4.1.3.3.2 Level 2 – Production Prototype and Limited Production

A4.1.3.3.3 Level 3 – Production

A4.1.4 **Drawing Practices**

A4.1.4.1 Drawing practices must be IAW ASME Y14.100.

A4.1.5 **Data Rights Legend**

A4.1.5.1 The Contractor must mark all Foreground & Background Engineering Drawings & Associated Lists delivered under this contract with the following notation, that pertains to the “Intellectual Property Rights” and/or “Data Rights” clause(s) of the contract:

A4.1.5.1.1 Intellectual Property (IP) in Foreground that belongs to the Contractor: “© (insert year) (insert IP owner). This deliverable was delivered under Contract no. XXXX and contains Foreground Intellectual Property (IP). Her Majesty the Queen in Right of Canada has a royalty-free and perpetual license to the IP and is permitted to use, reproduce, modify, and translate, including authorizing contractors to reproduce, modify, and translate, in whole or in part the deliverable for all government purposes

including competitive tendering. Refer to the contract terms for additional details as required."

A4.1.5.1.2 Intellectual Property (IP) in Background Information: "© (insert year) (insert IP owner). This deliverable was delivered under Contract no. XXXX and contains Background Intellectual Property (IP). Her Majesty the Queen in Right of Canada has a royalty-free and perpetual license to the Background IP for the purpose of exercising its rights in the Contract deliverables and Foreground Information. The license includes the rights to use, reproduce, modify, and translate this deliverable, and further includes the right to authorize others to use, reproduce, modify, and translate, in whole or in part the deliverable for all government purposes including competitive tendering. Refer to the contract terms for additional details as required."

## A4.2 Data Lists

A4.2.1 The Contractor must provide Data Lists complete with Cover Sheets, prepared IAW ASME Y14.34M and supplied along with the Engineering Drawings. Data Lists must be prepared at the item level of assembly (and/or end item) declared for future production by the Technical Authority. Cover sheets must be prepared as sheet one (1) of the Data List. Cover Sheets must include the Contract Number and a note which details the **Intellectual Property Rights** that apply to the data identified on the Data List, see para. A4.1.5.

## A4.3 Reference Documents

A4.3.1 The Contractor must include reference documents called up on the Engineering Drawings (excepting those, which are government, society and readily available industrial specifications or standards) as part of the Engineering Drawings and Associated Lists.

## A4.4 TDAN

A4.4.1 The Contractor must prepare a TDAN listing all Drawings and Associated Lists delivered as a result of the contract. A sample TDAN can be provided upon request.

## A4.5 Drawing System

A4.5.1 The Contractor must use a mono-detail drawing system.

## A4.6 Drawing Types

A4.6.1 The Contractor must provide the necessary types of drawings that will satisfy the sophistication of the specified drawing level. Drawing types selected must be IAW ASME Y14.24. Type selection must be subject to the approval of both the DND Technical Authority and DSCO 4-6.

## A4.7 Control Drawings

A4.7.1 The Contractor must prepare Control Drawings as defined in ASME Y14.24, for commercial items approved for use in the design, which are not defined by Government or nationally recognized industrial specifications and standards.

## A4.8 Family-Tree Drawing(s)

A4.8.1 When required, the Contractor must prepare Family-Tree Drawing(s) of the complete configuration of the Engineering Drawing Package and it must be subject to the approval of both the DND Technical Authority and DSCO 4-6.

## A4.9 Units of Measure

A4.9.1 The DND Technical Authority will determine the units of measure (metric or Imperial).

A4.9.2 Metric drawings produced by the Contractor must comply with ASTM SI10 American National Standard for Metric Practice.

## A4.10 Controlled Goods Identification

A4.10.1 The Contractor must mark all drawings and Associated Lists with the appropriate Controlled Goods Identification. These e-stamps can be obtained from DSCO 4-6. The DND Technical Authority will determine the Controlled Good status of the drawings and lists.

## A4.11 Integration

A4.11.1 The Contractor must integrate the new and existing drawings to form a complete Engineering Drawing Package.

## A4.12 Quality Assurance Provisions

A4.12.1 Quality of the Engineering Drawings and Associated Lists delivered on this contract is the responsibility of the Contractor and subject to the quality requirements of the contract.

A4.12.2 **Acceptance**

A4.12.2.1 Acceptance of the Engineering Drawings, Associated Lists and Reference Documents for technical content requirements will be the responsibility of the DND Technical Authority. Acceptance of the Engineering Drawings, Associated Lists, Reference Documents and Electronic Data Deliverables for format requirements will be DSCO 4-6.

A4.12.3 **Interim Deliverables for Acceptance Purposes**

A4.12.3.1 Level 1 – Conceptual and Developmental Design

A4.12.3.1.1 The Contractor must provide Level 1 Engineering Drawings, Associated Lists and Reference Documents to the Technical Authority upon completion.

A4.12.3.2 Level 2 – Production Prototype and Limited Production

A4.12.3.2.1 Following acceptance of the Level 1 Engineering Drawings, Associated Lists and Reference Documents, the Contractor must provide Level 2 Engineering Drawings, Associated Lists and Reference Documents to the Technical Authority.

## A4.13 Final Deliverable

A4.13.1 Upon acceptance, the Contractor must provide Level 2 Engineering Drawings, Associated Lists and Reference Data in soft copy form as outlined herein.

A4.13.2 **Soft Copy Deliverables**

A4.13.2.1 The Contractor must include the Engineering Drawings, Associated Lists, Reference Data and the associated Metadata in electronic form, in the provided soft copy deliverables.

A4.13.3 **Engineering Drawings**

A4.13.3.1 The Contractor must provide Engineering Drawings as a PDF file (Raster) as detailed herein. Multi-sheet drawings must be delivered as one file.

A4.13.4 **Associated Lists**

A4.13.4.1 The Contractor must provide Associated Lists as a PDF file.

A4.13.5 **Reference Documents**

A4.13.5.1 The Contractor must provide Reference Documents as a PDF file.

A4.13.6 **TDAN**

A4.13.6.1 The Contractor must provide the TDAN, complete with contractor's signature, as a PDF file, with the final deliverables.

A4.13.7 **Metadata (Capture of Related Information)**

A4.13.7.1 The Contractor must provide Metadata for all Engineering Drawing and Associated List deliverables. Metadata records must contain the information shown in Table 1 below. Metadata must be delivered as a Microsoft Access database shown at Figure 1 below.

A4.13.8 **Database Table**

A4.13.8.1 The Contractor must deliver each file with a corresponding database record. All records must be entered into a single Microsoft Access 2010 database table. Fields without corresponding information must remain blank. The Microsoft Access database file must be named with the "batch no.mdb".

## A4.14 File Formats for Raster Data

A4.14.1 The Contractor must provide raster image data in PDF format, and meet the following requirements:

A4.14.2 **Image Size**

A4.14.2.1 Raster images for drawings/associated lists must retain the sheet size of the Master/Native file.

A4.14.3 **Image Colour**

A4.14.3.1 Images must be black on white background.

A4.14.4 **File Names/Batch Number Allocation**

A4.14.4.1 File names must be made up from the document number by adding a prefix (L for LAND, A for AIR and M for MARITIME). Batch numbers must be requested from DSCO 4-6.

## TABLE 1 INDEX FIELDS

| Order | Field Name | Max Field Length | Field Definition / Description | Example Entry |
|---|---|---|---|---|
| 1 | **FILENAME** *(all one word)* | 12 (8.3) | Name of electronic file - unique filename for uploading in database. Alpha characters must be uppercase. | **L9775457-1.PDF** |
| 2 | **BATCHNO** *(all one word)* | 8 | Batch number - used for uploading files in database. Batch number will be issued by DSCO 4-6. Alpha characters must be uppercase. | **LZ001** |
| 3 | **DOCUMENTNO** *(all one word)* | 25 | This field must contain the document number. | **9775457** |
| 4 | **REVISION** | 3 | Letter or number indicating the revision level. If there is no rev, indicate with dash (“-”) | **B** |
| 5 | **SHEETNO** *(all one word)* | 3 | Sheet number x to y. | **1-5** |
| 6 | **NOOFSHEETS** *(all one word)* | 3 | Sheet number x to y. Enter the value of y | **5** |
| 7 | **FRAMENO** *(all one word)* | 3 | This field must be left blank. | |
| 8 | **NOOFFRAMES** *(all one word)* | 3 | This field must be left blank. | |
| 9 | **NSCM** | 5 | This field must contain the NATO Supply Code for Manufacturers (NSCM) of the Owner of the data. (Also known as FSCM, CAGE or NCAGE code.) | **35907** |
| 10 | **SIZE** | 2 | This field contains the document size. -For imperial sizes use A, B, C, D, E, F, G, H, J, K and LE (for legal) -For metric sizes use A4, A3, A2, A1, A0 and B1. | **A2** |

| | | | | |
|---|---|---|---|---|
| 11 | **ADDITIONALIDENTIFIER** (*all one word)* | 10 | This open field must be used when two (2) or more documents have the same document number but are different documents.<br><br>e.g. Document 12345, Document 12345 DCR 001, then “DCR 001" would be entered in this field. When field is not applicable, leave blank. | **DCR-001** |
| 12 | **DATARIGHTS** *(all one word)* | 1 | The data rights as specified in the contract. "L" for “LIMITED” or “U" for "UNLIMITED” | **U** |
| 13 | **DOCUMENTTITLE** *(all one word)* | 240 | Title of document. (i.e. Drawing title) | **BRACKET ASSY** |
| 14 | **TDANNO** *(all one word)* | 12 | This field must be used to enter the TDAN number assigned for the project. | **174471XXX** |
| 15 | **ERN** | 12 | This field must be used for the Equipment Registration Number (ERN). | **30-650-000** |
| 16 | **EAC** | 8 | This field must be left blank. | |
| 17 | **EQUIPMENT** | 75 | Name of the Equipment. | **BISON** |
| 18 | **CTAT** | 1 | If the data is “Not Controlled”, DM Code “A” must be entered. If the data is “Controlled Goods”, DM Code “D” must be entered. | **A or D** |
| 19 | **PROJECTNAME** | 30 | This field is filled in by DSCO 4-6. This field must be left blank. | |

| FILENAME | BATCH NO | DOCUMENT NO | REVI SION | SHEET NO | NO OF SHEE TS | FRA ME NO | NO OF FRAMES | NSCM | SIZE | ADDITIONAL IDENTIFIER | DATA RIGHTS | TDANNO | DOCUMENTTITLE | ERN | EAC | EQUIP | CTAT | PROJECTNAME |
|---|---|---|---|---|---|---|---|---|---|---|---|---|---|---|---|---|---|---|
| LDL-9775457-1.pdf | LZ001 | DL-9775457-1 | - | 1-2 | 2 | | | 35907 | A4 | | U | 174471137 | BRACKET ASSY | | | | A | |
| LDL-9775457-1.doc | LZ001 | NATDL-9775457-1 | - | 1-2 | 2 | | | 35907 | A4 | | U | 174471137 | BRACKET ASSY | | | | A | NATIVE FILES |
| L9775457.pdf | LZ001 | 9775457 | - | 1-5 | 5 | | | 35907 | A1 | | U | 174471137 | BRACKET ASSY | | | | A | |
| L9775457.dwg | LZ001 | NAT9775457 | - | 1-5 | 5 | | | 35907 | A1 | | U | 174471137 | BRACKET ASSY | | | | A | NATIVE FILES |
| L9775458.pdf | LZ001 | 9775458 | - | 1 | 1 | | | 35907 | A0 | | U | 174471137 | BRACKET ASSY | | | | A | |
| * L9775457.zip | LZ001 | NAT9775457 | - | 1 | 1 | | | 35907 | 1 | | U | 174471137 | BRACKET ASSY | | | | A | NATIVE FILES |

*Combine 3D CAD native files (Solid Works, Solid Edge, Inventor…) in .zip file using the top level drawing number as the file name.

## File Naming Convention

| File Name | Description |
|---|---|
| LDL-9775457-1.pdf | Data List no DL-9775457-1, Sheet 1 to 2, Rev - |
| LDL-9775457-1.doc | Data List no DL-9775457-1, Sheet 1 to 2, Rev - |
| L9775457.pdf | Drawing no 9775457, Sheet 1 to 5, Rev - |
| L9775457.dwg | Drawing no 9775457, Sheet 1 of 5, Rev - |
| L9775458.pdf | Drawing no 9775458, Sheet 1 of 1, Rev - |
| L9775457.zip | *Native CAD Model Files, all files & sheets, Rev - |

## Filename Prefixes

A, L or M9775457.pdf [(A)ir, (L)and or (M)aritime + 9775457 = Document Number]

**FIGURE 1 METADATA EXAMPLE (New Drawings & Associated Lists)**

| FILENAME | BATCH NO | DOCUMENT NO | REVISION | SHEET NO | NO OF SHEETS | FRAME NO | NO OF FRAMES | NSCM | SIZ E | ADDITIONAL IDENTIFIER | DATA RIGHTS | TDANNO | DOCUMENTTITLE | ERN | EAC | EQUIP | CTAT | PROJECTNAME |
|---|---|---|---|---|---|---|---|---|---|---|---|---|---|---|---|---|---|---|
| LDL-9775457-1-A.pdf | LZ001 | DL-9775457-1 | A | 1-2 | 2 | | | 35907 | A4 | | U | 174471137 | BRACKET ASSY | | | | A | |
| LDL-9775457-1-A.doc | LZ001 | NATDL-9775457-1 | A | 1-2 | 2 | | | 35907 | A4 | | U | 174471137 | BRACKET ASSY | | | | A | NATIVE FILES |
| L9775457-A.pdf | LZ001 | 9775457 | A | 1-5 | 5 | | | 35907 | A1 | | U | 174471137 | BRACKET ASSY | | | | A | |
| L9775457-A.dwg | LZ001 | NAT9775457 | A | 1-5 | 5 | | | 35907 | A1 | | U | 174471137 | BRACKET ASSY | | | | A | NATIVE FILES |
| L9775458-B.pdf | LZ001 | 9775458 | B | 1 | 1 | | | 35907 | A0 | | U | 174471137 | BRACKET ASSY | | | | A | |
| * L9775457-A.zip | LZ001 | NAT9775457 | A | 1 | 1 | | | 35907 | 1 | | U | 174471137 | BRACKET ASSY | | | | A | NATIVE FILES |

*Combine 3D CAD native files (Solid Works, Solid Edge, Inventor…) in .zip file using the top level drawing number as the file name.

## File Naming Convention

| File Name | Description |
|---|---|
| LDL-9775457-1-A.pdf | Data List no DL-9775457-1, Sheet 1 to 2, Rev A |
| LDL-9775457-1-A.doc | Data List no DL-9775457-1, Sheet 1 to 2, Rev A |
| L9775457-A.pdf | Drawing no 9775457, Sheet 1 to 5, Rev A |
| L9775457-A.dwg | Drawing no 9775457, Sheet 1 of 5, Rev A |
| L9775458-B.pdf | Drawing no 9775458, Sheet 1 of 1, Rev B |
| L9775457-A.zip | *Native CAD Model Files, all files & sheets, Rev A |

## Filename Prefixes

A, L or M9775457.pdf [(A)ir, (L)and or (M)aritime + 9775457 = Document Number]

**FIGURE 2 METADATA EXAMPLE (Revised Drawings & Associated Lists)**

# A5.0 APPENDIX: WATER QUALITY TEST PLAN

## A5.1 General

A5.1.1 **The water quality test plan consists of the following seven (7) challenge waters:**

A5.1.1.1 Organic Compound Fouling and Hard Water Treatment

A5.1.1.2 Bacteria and Virus Elimination

A5.1.1.3 Organic Compound Rejection

A5.1.1.4 Anionic Inorganic Compound Rejection 1

A5.1.1.5 Anionic Inorganic Compound Rejection 2

A5.1.1.6 Cationic Inorganic Compound Rejection 1

A5.1.1.7 Cationic Inorganic Compound Rejection 2

A5.1.2 Challenge waters for each challenge are to be prepared following the general procedure in A5.2 using the ingredients identified for each challenge water (A5.3 – A5.9). The challenge water parameters, required ingredient and associated contaminant concentrations, and allowable permeate concentrations after treatment are identified in tables 1 through 7. The permeate quality standards are based on the Guidelines for Canadian Drinking Water Quality (GCDWQ)[1] and on the Ontario Drinking Water Standards (ODWS)[2] for instances where the GCDWQ lacks specificity.

A5.1.3 In situ measurements (e.g. TDS. pH and density), sample preparation, collection, preservation and transportation must be conducted in accordance with water sampling guidelines from a recognized water testing standards development organization (e.g. ASTM, NSA, EPA, and Health Canada).

A5.1.4 Laboratory testing must be conducted by a laboratory which is accredited to ISO/IEC 17025 for the required parameters in drinking water. The laboratory accreditation must come from an accreditation body which is signatory to the ILAC MRA (International Laboratory Accreditation Cooperation Mutual Recognition Arrangement).

## A5.2 Challenge Water Preparation

A5.2.1 The volume of challenge water prepared must be sufficient to meet the permeate flow requirements defined in Tables 1 through 7.

A5.2.2 Add distilled/de-ionized water to a vessel or a series of vessels. The vessel(s) will be used as the feed for the system. The vessel(s) must be constructed of a material that will not contaminate the challenge waters. Add approximately half of the necessary total water volume.

A5.2.3 The vessel(s) must be outfitted with a system that continuously agitates the challenge water to maintain contaminant suspension and to ensure equal contaminant distribution.

A5.2.4 Add the necessary mass of challenge water ingredients to obtain the required ingredient and contaminant concentrations for challenge waters as outlined in Tables 1 through 7.

A5.2.5 Pre-mix the ingredients, separately or in combination, in a small volume of distilled/de-ionized water in a separate vessel before adding the ingredient to the larger feed vessel(s). Ensure that the ingredients are completely dissolved before adding them to the larger feed vessel(s).

A5.2.6 Add the remaining necessary volume of distilled/de-ionized water.

A5.2.7 Wait an appropriate amount of time, depending on the efficiency of the mixing, to allow for homogenization of the mixture.

A5.2.8 Take six samples of equal volume from six different locations in the vessel(s). Samples are to be taken from where the top, horizontal centerline, and bottom of the vessel(s) intersect with the vertical centerline and the wall of the vessel(s). Leave each sample in ambient conditions until the temperature of all samples is the same. Use a density meter to measure the density of each sample. Add the samples back into the vessel(s). If the density across all six samples is not consistent then continue mixing the vessel(s) contents and repeat this step. Mixture homogeneity is said to be achieved when the measured densities across all six samples are consistent. An alternative is to measure TDS, if the TDS is consistent across all six sample points then the mixture can be said to have achieved homogeneity.

A5.2.9 Take a sample from the center of the vessel(s) and measure pH. Return the sample to the vessel(s). Add sodium hydroxide or hydrochloric acid as necessary to achieve the desired pH (refer to Tables 1 through 7). Mix the vessel(s) and repeat this step until the desired pH is achieved.

A5.2.10 Collect a 1 L sample to be sent to a test laboratory to determine the pre-treatment contaminant concentrations of each challenge water.

A5.2.11 Set up an inline system to cool the feed challenge water at the WTS inlet to 4ºC A temperature probe must be set up to ensure that the WTS feed enters at 4ºC.

A5.2.12 Set up an inline system to monitor the total dissolved solids of the feed challenge water at the WTS inlet.

A5.2.13 Set up a flow rate and pressure monitor after every unit operation in the WTS (a unit operation in the WTS is defined as a component that is designed, or would be reasonably assumed, to change the system pressure or that is designed to remove contaminants from the challenge water).

## A5.3 Challenge Water 1: Organic Compound Fouling and Hard Water Treatment

A5.3.1 The challenge water parameters, contaminant concentrations, and allowable permeate concentrations for the organic compound fouling and hard water challenge are in Table 1.

Table 1: Challenge Water 1 Properties and Composition

| General Requirements | |
|---|---|
| Test Duration (hours) | 2 |
| Average Single-Pass Permeate Flow Rate (L/h) | 1,250 |

| | | |
|---|---|---|
| Average Double-Pass Permeate Flow Rate (L/h) | | 625 |
| **Parameter** | **Parameter Value** | **Permeate Quality Standard** |
| TDS (ppm) | 45,000 | 500 (Table 2, p. 16)[1] |
| Water Temperature (ºC) | 4 | N/A |
| pH | 5.5 | N/A |
| Hardness (ppm of $CaCO_3$) | 200 | See TDS |
| DOC (ppm) | 20 | 0.15 (p. 21)[2] |
| **Challenge water Ingredients** | | **Ingredient Concentration** |
| Distilled/De-Ionized Water | | |
| Humic Acid | | 20 ppm |
| Calcium Carbonate | | 200 ppm |
| Sodium Chloride | | 44,780 ppm |
| **Contaminants** | **Contaminant Concentration** | **Permeate Quality Standard** |
| Humic Acid | 20.00 ppm | See DOC |
| Calcium | 80.09 ppm | 32-40 ppm (p. 22)[2] |
| Chloride | 27,163.77 ppm | 250 ppm (Table 2, p. 8)[1] |
| Sodium | 17,616.23 ppm | 200 ppm (Table 2, p. 15)[1] |
| Carbonate | 119.91 ppm | N/A |

[1] Health Canada (2017). Guidelines for Canadian Drinking Water Quality – Summary Table. Water and Air Quality Bureau, Healthy Environments and Consumer Safety Branch, Health Canada, Ottawa, Ontario.

[2] Ontario Ministry of the Environment (MOE). 2003 (revised 2006). The Technical Support Document for the Ontario Drinking Water Quality Standards, Objectives and Guideline. PIBS 4449e01 Available on https://www.ontario.ca/

A5.3.2 **Test Procedure:**

A5.3.2.1 Flush the WTS system with 100 L of distilled/de-ionized water and record the flow rate and pressure after every unit operation in the WTS to use as a clean system baseline.

A5.3.2.2 Run the challenge water through the WTS with the WTS operating in double-pass mode. The trial is said to start 5 minutes after the challenge water begins being processed by the WTS and the trial is set to last for 2 hours. Record the inlet temperature reading and the inlet total dissolved solids reading at the start of the trial and every 5 minutes after trial start to ensure feed consistency. These values would ideally be automatically monitored and recorded for the entire duration of the trial.

A5.3.2.3 Record the flow rate and pressure after every unit operation in the WTS at the start of the trial and every 5 minutes after trial start. These values would ideally be automatically monitored and recorded for the entire duration of the trial.

A5.3.2.4 Collect a 1 L sample from both the single-pass and double-pass permeate streams every 15 minutes for determination of contaminant rejection. These samples must have their temperature, pH, TDS, and free chlorine measured immediately. The samples are then processed and shipped to a laboratory to determine the concentrations of DOC, calcium, sodium, chloride, and disinfection by-products (DBPs).

A5.3.2.5 Turn off the WTS after 2 hours of trial time. Drain the WTS and follow the manufacturer's instructions to operate the clean-in-place system.

A5.3.2.6 Measure the remaining volume of challenge water. The remaining volume of challenge water is to be compared to the volume of permeate produced and the initial challenge water volume to determine the percentage of permeate production.

A5.3.3 **Evaluation Criteria:**

A5.3.3.1 The permeate flow rate data after single-pass and after double-pass collected every 5 minutes will be plotted. The data will be extrapolated to estimate the flow rate curve of the WTS over 20 hours of continuous operation. The WTS is deemed to have sufficient permeate flow rate if the total flow rate expected during 20 hours of operation averages to 1,250 L/h for the single-pass data and averages to 625 L/h for the double-pass data.

A5.3.3.2 All permeate parameter values and contaminant concentrations must meet the specified permeate quality standards in Table 1. DBP concentrations must meet GCDWQ standards, pH standards excluded. The quality standards must be met by both the single-pass and double-pass permeate samples, however total TDS reduction, sodium reduction, and chlorine reduction must only be met by the double-pass permeate sample.

## A5.4 Challenge Water 2: Bacteria and Virus Elimination

A5.4.1 The challenge water parameters, contaminant concentrations, and allowable permeate concentrations for bacteria and virus elimination are in Table 2.

Table 2: Challenge Water 2 Properties and Composition

| General Requirements | | |
|---|---|---|
| Test Duration (hours) | | 1 |
| Average Single-Pass Permeate Flow Rate (L/h) | | 1,250 |
| **Parameter** | **Parameter Value** | **Permeate Quality Standard** |
| TDS (ppm) | 300 | 500 (Table 2, p. 16)[1] |
| Water Temperature (ºC) | 20 | N/A |
| pH | 6.5-7.5 | N/A |
| Hardness (ppm of $CaCO_3$) | 0 | See TDS |
| DOC (ppm) | 10 | 0.15 (p. 21)[2] |
| **Challenge water Ingredients** | | |
| Distilled/De-Ionized Water | | |
| Humic Acid | | |
| Escherichia Coli | | |
| GI F-Specific RNA Coliphage MS2 | | |
| Sodium Chloride | | |
| **Contaminants** | **Contaminant Concentration** | **Permeate Quality Standard** |
| Humic Acid | 10.00 ppm | See DOC |
| Escherichia Coli | $5 \cdot 10^8$ CFU/L | None detectable/100 mL (Table 1, p. 3)[1] |
| GI F-Specific RNA Coliphage MS2 | $5 \cdot 10^8$ PFU/L | None detectable/100 mL (Table 1, p. 4 as "Total coliforms" surrogate)[1] |
| Chloride | 175.92 ppm | 250 ppm (Table 2, p. 8)[1] |
| Sodium | 114.08 ppm | 200 ppm (Table 2, p. 15)[1] |

[1] Health Canada (2017). Guidelines for Canadian Drinking Water Quality – Summary Table. Water and Air Quality Bureau, Healthy Environments and Consumer Safety Branch, Health Canada, Ottawa, Ontario.

[2] Ontario Ministry of the Environment (MOE). 2003 (revised 2006). The Technical Support Document for the Ontario Drinking Water Quality Standards, Objectives and Guideline. PIBS 4449e01 Available on https://www.ontario.ca/

A5.4.2 **Test Procedure:**

A5.4.2.1 Flush the WTS system with 100 L of distilled/de-ionized water and record the flow rate and pressure after every unit operation in the WTS to use as a clean system baseline.

A5.4.2.2 Run the challenge water through the WTS with the WTS operating in single-pass mode. The trial is said to start 5 minutes after the challenge water begins being processed by the WTS and the trial is set to last for 1 hour. Record the inlet temperature reading and the inlet total dissolved solids reading at the start of the trial and every 5 minutes after trial start to ensure feed consistency. These values would ideally be automatically monitored and recorded for the entire duration of the trial.

A5.4.2.3 Record the flow rate and pressure after every unit operation in the WTS at the start of the trial and every 5 minutes after trial start. These values would ideally be automatically monitored and recorded for the entire duration of the trial.

A5.4.2.4 Collect a 1 L sample from the permeate stream every 15 minutes for determination of contaminant rejection. These samples must have their temperature, pH, TDS, and free chlorine measured immediately. Analyze the samples within one hour using an ATP test to determine the concentration of intracellular ATP and dissolved (extracellular) ATP. The samples are then processed and shipped to a laboratory to determine the concentrations of DOC and DBPs.

A5.4.2.5 Turn off the WTS after 1 hour of trial time. Drain the WTS and follow the manufacturer's instructions to operate the clean-in-place system.

A5.4.2.6 Measure the remaining volume of challenge water. The remaining volume of challenge water is to be compared to the volume of permeate produced and the initial challenge water volume to determine the percentage of permeate production.

A5.4.2.7 Take a 1 L sample from the left-over challenge water. Analyze the sample within one hour using an ATP test to determine the concentration of intracellular ATP and dissolved (extracellular) ATP.

A5.4.3 **Evaluation Criteria:**

A5.4.3.1 The permeate flow rate data after single-pass collected every 5 minutes will be plotted. The data will be extrapolated to estimate the flow rate curve of the WTS over 20 hours of continuous operation. The WTS is deemed to have sufficient permeate flow rate if the total flow rate expected during 20 hours of operation averages to 1,250 L/h.

A5.4.3.2 All permeate parameter values and contaminant concentrations must meet the specified permeate quality standards in Table 2. DBP concentrations must meet GCDWQ standards, pH standards excluded. The 1 L sample taken from the left-over challenge water in Test Procedure at Para A5.2.3.7 above must demonstrate that active biological contaminants in the challenge water remained at the concentrations specified in Table 2.

## A5.5 Challenge Water 3: Organic Compound Rejection

A5.5.1 The challenge water parameters, contaminant concentrations, and allowable permeate concentrations for the organic compound rejection challenge are in Table 3.

Table 3: Challenge Water 3 Properties and Composition

| General Requirements | | |
|---|---|---|
| Test Duration (hours) | | 1 |
| Average Single-Pass Permeate Flow Rate (L/h) | | 1,250 |
| **Parameter** | **Parameter Value** | **Permeate Quality Standard** |
| TDS (ppm) | 300 | 500 (Table 2, p. 16)[1] |
| Water Temperature (°C) | 4 | N/A |
| pH | 5.5 | N/A |
| Hardness (ppm of $CaCO_3$) | 0 | See TDS |
| DOC (ppm) | 2.77 | 0.15 (p. 21)[2] |
| **Challenge water Ingredients** | | |
| Distilled/De-Ionized Water | | |
| MTBE | | |
| Carbon Tetrachloride | | |
| Chloroform | | |
| Benzene | | |
| Sodium Chloride | | |
| **Contaminants** | **Contaminant Concentration** | **Permeate Quality Standard** |
| MTBE | 0.25 ppm | 0.015 ppm (Table 2, p. 13)[1] |
| Carbon Tetrachloride | 0.11 ppm | 0.002 ppm (Table 2, p. 7)[1] |
| Chloroform | 2.00 ppm | 0.1 ppm (Table 2, p. 17 as "Trihalomethanes" surrogate)[1] |
| Benzene | 0.41 ppm | 0.005 ppm (Table 2, p. 6)[1] |
| Chloride | 180.30 ppm | 250 ppm (Table 2, p. 8)[1] |
| Sodium | 116.93 ppm | 200 ppm (Table 2, p. 15)[1] |

[1] Health Canada (2017). Guidelines for Canadian Drinking Water Quality – Summary Table. Water and Air Quality Bureau, Healthy Environments and Consumer Safety Branch, Health Canada, Ottawa, Ontario.

[2] Ontario Ministry of the Environment (MOE). 2003 (revised 2006). The Technical Support Document for the Ontario Drinking Water Quality Standards, Objectives and Guideline. PIBS 4449e01 Available on https://www.ontario.ca/

A5.5.2 **Test Procedure:**

A5.5.2.1 Flush the WTS system with 100 L of distilled/de-ionized water and record the flow rate and pressure after every unit operation in the WTS to use as a clean system baseline.

A5.5.2.2 Run the challenge water through the WTS with the WTS operating in single-pass mode. The trial is said to start 5 minutes after the challenge water begins being processed by the WTS and the trial is set to last for 1 hour. Record the inlet temperature reading and the inlet total dissolved solids reading at the start of the trial and every 5 minutes after trial start to ensure feed consistency. These values would ideally be automatically monitored and recorded for the entire duration of the trial.

A5.5.2.3 Record the flow rate and pressure after every unit operation in the WTS at the start of the trial and every 5 minutes after trial start. These values would ideally be automatically monitored and recorded for the entire duration of the trial.

A5.5.2.4 Collect a 1 L sample from the permeate stream every 15 minutes for determination of contaminant rejection. These samples must have their temperature, pH, TDS, and free chlorine measured immediately. The samples are then processed and shipped to a laboratory to determine the concentrations of MTBE, carbon tetrachloride, benzene, and DBPs.

A5.5.2.5 Turn off the WTS after 1 hour of trial time. Drain the WTS and follow the manufacturer's instructions to operate the clean-in-place system.

A5.5.2.6 Measure the remaining volume of challenge water. The remaining volume of challenge water is to be compared to the volume of permeate produced and the initial challenge water volume to determine the percentage of permeate production.

A5.5.3 **Evaluation Criteria:**

A5.5.3.1 The permeate flow rate data after single-pass collected every 5 minutes will be plotted. The data will be extrapolated to estimate the flow rate curve of the WTS over 20 hours of continuous operation. The WTS is deemed to have sufficient permeate flow rate if the total flow rate expected during 20 hours of operation averages to 1,250 L/h.

A5.5.3.2 All permeate parameter values and contaminant concentrations must meet the specified permeate quality standards in Table 3. DBP concentrations must meet GCDWQ standards.

## A5.6 Challenge Water 4: Anionic Inorganic Compound Rejection 1

A5.6.1 The challenge water parameters, contaminant concentrations, and allowable permeate concentrations for the anionic inorganic compound rejection 1 challenge are in Table 4.

Table 4: Challenge Water 4 Properties and Composition

| General Requirements | | |
|---|---|---|
| Test Duration (hours) | | 1 |
| Average Single-Pass Permeate Flow Rate (L/h) | | 1,250 |
| Average Double-Pass Permeate Flow Rate (L/h) | | 625 |
| **Parameter** | **Parameter Value** | **Permeate Quality Standard** |
| TDS (ppm) | 300 | 500 (Table 2, p. 16)[1] |
| Water Temperature (ºC) | 30 | N/A |
| pH | 5.5 | N/A |
| Hardness (ppm of $CaCO_3$) | 0 | See TDS |
| DOC (ppm) | 0 | 0.15 (p. 21)[2] |
| **Challenge water Ingredients** | | |
| Distilled/De-Ionized Water | | |
| Sodium Arsenite | | |
| Sodium Selenite | | |
| Sodium Iodide | | |
| Sodium Fluoride | | |
| Sodium Chloride | | |
| **Contaminants** | **Contaminant Concentration** | **Permeate Quality Standard** |
| Arsenic (III) | 0.90 ppm | 0.01 ppm (Table 2, p. 6)[1] |
| Selenium (IV) | 1.50 ppm | 0.05 ppm (Table 2, p. 15)[1] |
| Iodide | 60.00 ppm | 0.03 ppm (Table 3, p. 19 as "Iodine-131" surrogate)[1,3] |
| Fluoride | 50.00 ppm | 1.5 ppm (Table 2, p. 11)[1] |
| Chloride | 69.01 ppm | 250 ppm (Table 2, p. 8)[1] |
| Sodium | 45.91 ppm | 200 ppm (Table 2, p. 15)[1] |

[1] Health Canada (2017). Guidelines for Canadian Drinking Water Quality – Summary Table. Water and Air Quality Bureau, Healthy Environments and Consumer Safety Branch, Health Canada, Ottawa, Ontario.

[2] Ontario Ministry of the Environment (MOE). 2003 (revised 2006). The Technical Support Document for the Ontario Drinking Water Quality Standards, Objectives and Guideline. PIBS 4449e01 Available on https://www.ontario.ca/

[3] Permeate Quality Standard adjusted with respect to percent rejection objective and post-processing analysis limitations.

A5.6.2 **Test Procedure:**

A5.6.2.1 Flush the WTS system with 100 L of distilled/de-ionized water and record the flow rate and pressure after every unit operation in the WTS to use as a clean system baseline.

A5.6.2.2 Run the challenge water through the WTS with the WTS operating in double-pass mode. The trial is said to start 5 minutes after the challenge water begins being processed by the WTS and the trial is set to last for 1 hour. Record the inlet temperature reading and the inlet total dissolved solids reading at the start of the trial and every 5 minutes after trial start to ensure feed consistency. These values would ideally be automatically monitored and recorded for the entire duration of the trial.

A5.6.2.3 Record the flow rate and pressure after every unit operation in the WTS at the start of the trial and every 5 minutes after trial start. These values would ideally be automatically monitored and recorded for the entire duration of the trial.

A5.6.2.4 Collect a 1 L sample from both the single-pass and double-pass permeate streams every 15 minutes for determination of contaminant rejection. These samples must have their temperature, pH, TDS, and free chlorine measured immediately. The samples are then processed and shipped to a laboratory to determine the concentrations of arsenic, selenium, iodine, and fluorine.

A5.6.2.5 Turn off the WTS after 1 hour of trial time. Drain the WTS and follow the manufacturer's instructions to operate the clean-in-place system.

A5.6.2.6 Measure the remaining volume of challenge water. The remaining volume of challenge water is to be compared to the volume of permeate produced and the initial challenge water volume to determine the percentage of permeate production.

A5.6.3 **Evaluation Criteria:**

A5.6.3.1 The permeate flow rate data after single-pass collected every 5 minutes will be plotted. The data will be extrapolated to estimate the flow rate curve of the WTS over 20 hours of continuous operation. The WTS is deemed to have sufficient permeate flow rate if the total flow rate expected during 20 hours of operation averages to 1,250 L/h for the single-pass data and averages to 625 L/h for the double-pass data.

A5.6.3.2 All permeate parameter values and contaminant concentrations must meet the specified permeate quality standards in Table 4. The quality standards must be met by both the single-pass and double-pass permeate samples; however, iodine reduction must only be met by the double-pass permeate sample.

## A5.7 Challenge Water 5: Anionic Inorganic Compound Rejection 2

A5.7.1 The challenge water parameters, contaminant concentrations, and allowable permeate concentrations for the anionic inorganic compound rejection 2 challenge are in Table 5.

Table 5: Challenge Water 5 Properties and Composition

| General Requirements | | |
|---|---|---|
| Test Duration (hours) | | 1 |
| Average Single-Pass Permeate Flow Rate (L/h) | | 1,250 |
| Average Double-Pass Permeate Flow Rate (L/h) | | 625 |
| **Parameter** | **Parameter Value** | **Permeate Quality Standard** |
| TDS (ppm) | 1,500 | 500 (Table 2, p. 16)[1] |
| Water Temperature (ºC) | 30 | N/A |
| pH | 5.5 | N/A |
| Hardness (ppm of $CaCO_3$) | 0 | See TDS |
| DOC (ppm) | 0 | 0.15 (p. 21)[2] |
| **Challenge water Ingredients** | | |
| Distilled/De-Ionized Water | | |
| Sodium Chromate | | |
| Sodium Perchlorate | | |
| Sodium Nitrite | | |
| Sodium Nitrate | | |
| Cesium Chloride | | |
| Sodium Chloride | | |
| **Contaminants** | **Contaminant Concentration** | **Permeate Quality Standard** |
| Chromium (VI) | 0.90 ppm | 0.05 ppm (Table 2, p. 8)[1] |
| Perchlorate | 0.20 ppm | 0.006 ppm (Table 7.2, p. 34)[3] |
| Nitrogen (Nitrite) | 15.00 ppm | 1 ppm (Table 2, p. 14)[1] |
| Nitrogen (Nitrate) | 195.00 ppm | 10 ppm (Table 2, p. 13)[1] |
| Cesium | 1.43 ppm | 0.001 ppm (Table 3, p. 19 as "Cesium-137" surrogate)[1,4] |
| Chloride | 144.91 ppm | 250 ppm (Table 2, p. 8)[1] |
| Sodium | 439.18 ppm | 200 ppm (Table 2, p. 15)[1] |

[1] Health Canada (2017). Guidelines for Canadian Drinking Water Quality – Summary Table. Water and Air Quality Bureau, Healthy Environments and Consumer Safety Branch, Health Canada, Ottawa, Ontario.

[2] Ontario Ministry of the Environment (MOE). 2003 (revised 2006). The Technical Support Document for the Ontario Drinking Water Quality Standards, Objectives and Guideline. PIBS 4449e01 Available on https://www.ontario.ca/

[3] NSF International (2016). Reverse osmosis drinking water treatment systems. NSF International Standard/American National Standard for Drinking Water Treatment Units. NSF International.

[4] Permeate Quality Standard adjusted with respect to percent rejection objective and post-processing analysis limitations.

A5.7.2 **Test Procedure:**

A5.7.2.1 Flush the WTS system with 100 L of distilled/de-ionized water and record the flow rate and pressure after every unit operation in the WTS to use as a clean system baseline.

A5.7.2.2 Run the challenge water through the WTS with the WTS operating in double-pass mode. The trial is said to start 5 minutes after the challenge water begins being processed by the WTS and the trial is set to last for 1 hour. Record the inlet temperature reading and the inlet total dissolved solids reading at the start of the trial and every 5 minutes after trial start to ensure feed consistency. These values would ideally be automatically monitored and recorded for the entire duration of the trial.

A5.7.2.3 Record the flow rate and pressure after every unit operation in the WTS at the start of the trial and every 5 minutes after trial start. These values would ideally be automatically monitored and recorded for the entire duration of the trial.

A5.7.2.4 Collect a 1 L sample from both the single-pass and double-pass permeate streams every 15 minutes for determination of contaminant rejection. The samples are then processed and shipped to a laboratory environment to determine the concentrations of chromium, perchlorate, nitrite-based nitrogen, nitrate-based nitrogen, cesium, and sodium.

A5.7.2.5 Turn off the WTS after 1 hour of trial time. Drain the WTS and follow the manufacturer's instructions to operate the clean-in-place system.

A5.7.2.6 Measure the remaining volume of challenge water. The remaining volume of challenge water is to be compared to the volume of permeate produced and the initial challenge water volume to determine the percentage of permeate production.

A5.7.3 **Evaluation Criteria:**

A5.7.3.1 The permeate flow rate data after single-pass collected every 5 minutes will be plotted. The data will be extrapolated to estimate the flow rate curve of the WTS over 20 hours of continuous operation. The WTS is deemed to have sufficient permeate flow rate if the total flow rate expected during 20 hours of operation averages to 1,250 L/h for the single-pass data and averages to 625 L/h for the double-pass data.

A5.7.3.2 All permeate parameter values and contaminant concentrations must meet the specified permeate quality standards in Table 5. The quality standards must be met by both the single-pass and double-pass permeate samples; however, cesium reduction must only be met by the double-pass permeate sample.

## A5.8 Challenge Water 6: Cationic Inorganic Compound Rejection 1

A5.8.1 The challenge water parameters, contaminant concentrations, and allowable permeate concentrations for the cationic inorganic compound rejection 1 challenge are in Table 6.

Table 6: Challenge Water 6 Properties and Composition

| General Requirements | | |
|---|---|---|
| Test Duration (hours) | | 1 |
| Average Single-Pass Permeate Flow Rate (L/h) | | 1,250 |
| Average Double-Pass Permeate Flow Rate (L/h) | | 625 |
| **Parameter** | **Parameter Value** | **Permeate Quality Standard** |
| TDS (ppm) | 300 | 500 (Table 2, p. 16)[1] |
| Water Temperature (ºC) | 30 | N/A |
| pH | 8.3 | N/A |
| Hardness (ppm of $CaCO_3$) | 0 | See TDS |
| DOC (ppm) | 0 | 0.15 (p. 21)[2] |
| **Challenge water Ingredients** | | |
| Distilled/De-Ionized Water | | |
| Cesium Chloride | | |
| Cadmium Chloride | | |
| Mercury (II) Chloride | | |
| Lead (II) Chloride | | |
| Sodium Iodide | | |
| Sodium Chloride | | |
| **Contaminants** | **Contaminant Concentration** | **Permeate Quality Standard** |
| Cesium | 1.43 ppm | 0.001 ppm (Table 3, p. 19 as "Cesium-137" surrogate)[1,3] |
| Cadmium | 0.10 ppm | 0.005 ppm (Table 2, p. 7)[1] |
| Mercury (II) | 0.018 ppm | 0.001 ppm (Table 2, p. 12)[1] |
| Lead (II) | 0.45 ppm | 0.01 ppm (Table 2, p. 12)[1] |
| Iodide | 60.00 ppm | 0.03 ppm (Table 3, p. 19 as "Iodine-131" surrogate)[1,3] |
| Chloride | 138.02 ppm | 250 ppm (Table 2, p. 8)[1] |
| Sodium | 99.99 ppm | 200 ppm (Table 2, p. 15)[1] |

[1] Health Canada (2017). Guidelines for Canadian Drinking Water Quality – Summary Table. Water and Air Quality Bureau, Healthy Environments and Consumer Safety Branch, Health Canada, Ottawa, Ontario.

[2] Ontario Ministry of the Environment (MOE). 2003 (revised 2006). The Technical Support Document for the Ontario Drinking Water Quality Standards, Objectives and Guideline. PIBS 4449e01 Available on https://www.ontario.ca/

[3] Permeate Quality Standard adjusted with respect to percent rejection objective and post-processing analysis limitations.

A5.8.2 **Test Procedure:**

A5.8.2.1 Flush the WTS system with 100 L of distilled/de-ionized water and record the flow rate and pressure after every unit operation in the WTS to use as a clean system baseline.

A5.8.2.2 Run the challenge water through the WTS with the WTS operating in double-pass mode. The trial is said to start 5 minutes after the challenge water begins being processed by the WTS and the trial is set to last for 1 hour. Record the inlet temperature reading and the inlet total dissolved solids reading at the start of the trial and every 5 minutes after trial start to ensure feed consistency. These values would ideally be automatically monitored and recorded for the entire duration of the trial.

A5.8.2.3 Record the flow rate and pressure after every unit operation in the WTS at the start of the trial and every 5 minutes after trial start. These values would ideally be automatically monitored and recorded for the entire duration of the trial.

A5.8.2.4 Collect a 1 L sample from both the single-pass and double-pass permeate streams every 15 minutes for determination of contaminant rejection. These samples must have their temperature, pH, TDS, and free chlorine measured immediately. The samples are then processed and shipped to a laboratory environment to determine the concentrations of copper, mercury, lead, chromium, strontium, nitrite-based nitrogen, nitrate based nitrogen, and sodium.

A5.8.2.5 Turn off the WTS after 1 hour of trial time. Drain the WTS and follow the manufacturer's instructions to operate the clean-in-place system.

A5.8.2.6 Measure the remaining volume of challenge water. The remaining volume of challenge water is to be compared to the volume of permeate produced and the initial challenge water volume to determine the percentage of permeate production.

A5.8.3 **Evaluation Criteria:**

A5.8.3.1 The permeate flow rate data after single-pass collected every 5 minutes will be plotted. The data will be extrapolated to estimate the flow rate curve of the WTS over 20 hours of continuous operation. The WTS is deemed to have sufficient permeate flow rate if the total flow rate expected during 20 hours of operation averages to 1,250 L/h for the single-pass data and averages to 625 L/h for the double-pass data.

A5.8.3.2 All permeate parameter values and contaminant concentrations must meet the specified permeate quality standards in Table 6. The quality standards must be met by both the single-pass and double-pass permeate samples; however, iodine and cesium reduction must only be met by the double-pass permeate sample.

## A5.9 Challenge Water 7: Cationic Inorganic Compound Rejection 2

A5.9.1 The challenge water parameters, contaminant concentrations, and allowable permeate concentrations for the cationic inorganic compound rejection 2 challenge are in Table 7.

Table 7: Challenge Water 7 Properties and Composition

| General Requirements | | |
|---|---|---|
| Test Duration (hours) | | 1 |
| Average Single-Pass Permeate Flow Rate (L/h) | | 1,250 |
| Average Double-Pass Permeate Flow Rate (L/h) | | 625 |
| **Parameter** | **Parameter Value** | **Permeate Quality Standard** |
| TDS (ppm) | 1,290 | 500 (Table 2, p. 16)[1] |
| Water Temperature (ºC) | 30 | N/A |
| pH | 8.3 | N/A |
| Hardness (ppm of $CaCO_3$) | 0 | See TDS |
| DOC (ppm) | 0 | 0.15 (p. 21)[2] |
| **Challenge water Ingredients** | | |
| Distilled/De-Ionized Water | | |
| Copper (II) Nitrate Trihydrate | | |
| Strontium Nitrate | | |
| Barium Nitrate | | |
| Chromium (III) Nitrate Nonahydrate | | |
| Sodium Perchlorate | | |
| Sodium Nitrite | | |
| Sodium Nitrate | | |
| **Contaminants** | **Contaminant Concentration** | **Permeate Quality Standard** |
| Copper (II) | 30.00 ppm | 1.00 ppm (Table 2, p. 9)[1] |
| Strontium | 10.00 ppm | 0.001 ppm (Table 3, p. 19 as "Strontium-90" surrogate)[1,4] |
| Barium | 30.00 ppm | 1.00 ppm (Table 2, p. 6)[1] |
| Chromium (III) | 0.90 ppm | 0.05 ppm (Table 2, p. 8)[1,5] |
| Perchlorate | 0.30 ppm | 0.006 ppm (Table 7.2, p. 34)[3] |
| Nitrogen (Nitrite) | 15.00 ppm | 1 ppm (Table 2, p. 14)[1] |
| Nitrogen (Nitrate) | 195.00 ppm | 10 ppm (Table 2, p. 13)[1] |
| Sodium | 306.47 ppm | 200 ppm (Table 2, p. 15)[1] |

[1] Health Canada (2017). Guidelines for Canadian Drinking Water Quality – Summary Table. Water and Air Quality Bureau, Healthy Environments and Consumer Safety Branch, Health Canada, Ottawa, Ontario.

[2] Ontario Ministry of the Environment (MOE). 2003 (revised 2006). The Technical Support Document for the Ontario Drinking Water Quality Standards, Objectives and Guideline. PIBS 4449e01 Available on https://www.ontario.ca/

[3] NSF International (2016). Reverse osmosis drinking water treatment systems. NSF International Standard/American National Standard for Drinking Water Treatment Units. NSF International.

[4]Permeate Quality Standard adjusted with respect to percent rejection objective and post-processing analysis limitations.

[5]Chromium (III) is not considered toxic, but removal is necessary to prevent oxidation to chromium (VI).

A5.9.2 **Test Procedure:**

A5.9.2.1 Flush the WTS system with 100 L of distilled/de-ionized water and record the flow rate and pressure after every unit operation in the WTS to use as a clean system baseline.

A5.9.2.2 Run the challenge water through the WTS with the WTS operating in double-pass mode. The trial is said to start 5 minutes after the challenge water begins being processed by the WTS and the trial is set to last for 1 hour. Record the inlet temperature reading and the inlet total dissolved solids reading at the start of the trial and every 5 minutes after trial start to ensure feed consistency. These values would ideally be automatically monitored and recorded for the entire duration of the trial.

A5.9.2.3 Record the flow rate and pressure after every unit operation in the WTS at the start of the trial and every 5 minutes after trial start. These values would ideally be automatically monitored and recorded for the entire duration of the trial.

A5.9.2.4 Collect a 1 L sample from both the single-pass and double-pass permeate streams every 15 minutes for determination of contaminant rejection. These samples must have their temperature, pH, TDS, and free chlorine measured immediately. The samples are then processed and shipped to a laboratory environment to determine the concentrations of cadmium, barium, cesium, iodine, and perchlorate.

A5.9.2.5 Turn off the WTS after 1 hour of trial time. Drain the WTS and follow the manufacturer's instructions to operate the clean-in-place system.

A5.9.2.6 Measure the remaining volume of challenge water. The remaining volume of challenge water is to be compared to the volume of permeate produced and the initial challenge water volume to determine the percentage of permeate production.

A5.9.3 **Evaluation Criteria:**

A5.9.3.1 The permeate flow rate data after single-pass collected every 5 minutes will be plotted. The data will be extrapolated to estimate the flow rate curve of the WTS over 20 hours of continuous operation. The WTS is deemed to have sufficient permeate flow rate if the total flow rate expected during 20 hours of operation averages to 1,250 L/h for the single-pass data and averages to 625 L/h for the double-pass data.

A5.9.3.2 All permeate parameter values and contaminant concentrations must meet the specified permeate quality standards in Table 7. The quality standards must be met by both the single-pass and double-pass permeate samples; however, strontium reduction must only be met by the double-pass permeate sample.

# A6.0 APPENDIX: CHEMICAL AGENT RESISTANT COATING SYSTEM

## A6.1 Scope

A6.1.1 This appendix outlines the procedures to be followed and the products to be used in order to paint surfaces of the Canadian Army operational vehicles/equipment with the distinctive exterior permanent matt green colour (AMS-STD-595 #34094) and interior permanent gloss white colour (AMS-STD-595 #17925) coating systems that provide the corrosion, the camouflage, the infra-red and CARC properties required for the protection of the vehicles/equipment and for the protection of the soldier.

## A6.2 Applicable Documents and Product NSNs

A6.2.1 Copies of these documents are available online from the US Department of Defense web site at http://quicksearch.dla.mil/ or from the Standardization Document Order Desk, 700 Robbins Avenue, Building 4D, Philadelphia, PA 19111-5094.

| Specification | NSN | Description |
|---|---|---|
| MIL-DTL-53072 | N/A | Detail Specification Chemical Agent Resistant Coating (CARC) System Application Procedures and Quality Control Inspection |
| DOD-P-15328 | 8030-00-281-2726 | Primer (Wash), Pre-treatment (Formula 117 For Metals) (Metric) (*NSN for 1 US Gal size kit*) |
| TT-C-490 Type III | 8030-00-281-2726 | Chemical Conversion Coatings and Pretreatments for Ferrous Surfaces (Base for Organic Coatings) (*NSN for 1 US Gal size kit*) |
| AMS-STD-595 | N/A | Colors Used in Government Procurement |
| MIL-DTL-53022 Type IV | 8010-01-589-7077 | Primer, Epoxy Coating, (Enhanced) Corrosion Inhibiting, Lead and Chromate Free (*NSN for 1.25 US Gal size kit*) |
| MIL-DTL-53022 Type V | 8010-01-610-7329 | Primer, Epoxy Coating, (Enhanced) Corrosion Inhibiting, Lead and Chromate Free (*NSN for 6X250 ml aerosol can kits*) |
| MIL-PRF-32348 Type I Class I with a maximum of 45 Gloss Units at 60° | 8010-01-592-0167<br>8010-01-620-2690 | Primer, Powder Coating, Corrosion Inhibiting (*NSN for 50 pound bag, colour #26622 or #27875 with a maximum Gloss level of 45 Gloss Units as determined by ASTM D523 at a 60° geometry*) |
| ASTM D 523 | N/A | Standard Test Method for Specular Gloss |
| MIL-PRF-24667 Type I, II or IV, Composition G | 8010-01-397-3806 | Coating System, Non-Skid, for Roll, Spray or Self-Adhering Application (*NSN for 5 US Gal kit*) |
| MIL-DTL-64159 Type II | 8010-01-493-3169<br>8010-01-493-3170<br>8010-01-493-3177<br>8010-01-493-3179 | Coating, Water Dispersible Aliphatic Polyurethane, Chemical Agent Resistant (*NSNs are for 0.75 and 3 US Gal size colour green #34094 and tan #33446*) |
| MIL-DTL-64159 Type III | 8010-01-596-7862<br>8010-01-596-7859<br>8010-01-596-7855 | Coating, Water Dispersible Aliphatic Polyurethane, Chemical Agent Resistant (*NSNs are for 30 mL kit colour green #34094, for 30 mL kit colour tan #33446 and for 30 mL kit colour black #37030 respectively*) |
| MIL-PRF-22750 Type II Class H Grade B | 8010-01-419-1164 | Performance Specification, Coating, Epoxy, High Solids, Interior Use Only (*NSN is for 1 US Gal kit colour white #17925*) |

| | | |
|---|---|---|
| MIL-PRF-32348 Type II Class I | 8010-01-605-5413 | Primer Powder Coating with no finish coating for interior use only, Chemical Agent Resistant (*50 pound bag, colour white #17925*) |
| MIL-PRF-32348 Type III Class I | - | Powder Coating Camouflage Chemical Agent Resistant Finish (*50 pound bag, colour green #34094*) |
| MIL-PRF-32348 Type III Class I | - | Powder Coating Camouflage Chemical Agent Resistant Finish (*50 pound bag, colour tan #33446*) |
| MIL-PRF-32348 Type IV Class I | 8010-01-610-2410 | Powder Topcoat, Ammunition Container Chemical Agent Resistant Coating (*NSN for 50 pound bag, colour green #34079*) |
| MIL-PRF-32348 Type IV Class I | 8010-01-610-2413 | Powder Topcoat, Ammunition Container Chemical Agent Resistant Coating (*NSN for 50 pound bag, colour Tan #33446*) |
| TSP | 7930-20-A0H-0013 | Tri-Sodium Phosphate (*1 pound container*) |
| Acetone | 6810-21-878-4860 | Acetone Technical (*1 Liter container*) |

## A6.3 Requirements

A6.3.1 A CARC system must be applied on the interior and exterior surfaces of the Canadian Army operational vehicles/equipment in conformance with the following descriptions.

A6.3.2 **Cleaning**

A6.3.2.1 All parts must be cleaned immediately before surface preparation. Prior to surface preparation, all surfaces must be freed of corrosion or soil contaminants such as grease, oil, welding flux, scale, dirt, adhesives or other foreign matter that may interfere with surface preparation, treatment or coating. For this purpose use a hot alkaline cleaning by immersion, spray or vapour process or appropriate organic solvent(s) as per MIL-DTL-53072 (latest edition).

A6.3.2.2 Precautions must be taken to ensure that surfaces remain clean and dry until they are pre-treated, primed and topcoated.

A6.3.3 **Surface Preparation**

A6.3.3.1 Heavy metal parts must be processed by abrasive grit blast to a white metal SSPC-SP-5 surface finish to impart a profile of 38 to 50 microns (1.5 to 2 mils). Lighter delicate metal parts that cannot withstand aggressive grit blasting without warping must be processed in accordance with paragraph A6.3.3.2. For non-metallic parts surface preparation, perform a uniform scuffing of the surface with a 180 grit abrasive media. Dust-off surfaces.

A6.3.3.2 For delicate metal parts surface preparation, perform an abrasive grit blast cleaning to a white metal SSPC-SP-5 surface finish imparting to the substrate a profile of 13 microns. Dust-off surfaces.

A6.3.4 **Surface pre-treatment**

A6.3.4.1 Metal parts and non-metallic parts surfaces prepared as per paragraph A6.3.3.1 above do not require pre-treatment.

A6.3.4.2 Delicate metal part surfaces prepared as per paragraph A6.3.3.2 above must receive an organic pre-treatment (wash primer) coating meeting the requirements of specification TT-C-490 type III (DOD-P-15328) (latest edition).

A6.3.5 **Primer**

A6.3.5.1 A liquid primer coating meeting the requirements of specification MIL-DTL-53022 Type IV (latest edition), Epoxy Coating, Enhanced Corrosion Protection or a powder primer coating, Corrosion Inhibiting meeting the requirements of specification MIL-PRF-32348 Type I Class I (latest edition) with a maximum Gloss level of 45 Gloss Units as determined by ASTM D523 at a 60° geometry must be applied to all surfaces that need to be coated. These primers must be applied to a dry film thickness (DFT) as recommended by the manufacturer technical data sheet or specifically for MIL-DTL-53022 Type IV (latest edition) when applied direct to metal (i.e. w/o pre-treatment), a DFT of 50 to 63 microns must be achieved when measuring the DFT of the primers over the highest peaks of the profile. For interior surfaces see also para A6.3.7.2.2.

A6.3.5.2 WARNING: Powder primer coatings requiring a cure temperature above 180°C must not be used on composite materials or parts pre-treated with TT-C-490 Type III.

A6.3.6 **Non-Skid Surface**

A6.3.6.1 Apply, as per manufacturer's instructions a non-skid coating meeting the requirements of specification MIL-PRF-24667 Type I, II, or IV, Composition G, (latest edition) colour #36076 (dark grey) in accordance with AMS-STD-595 (latest edition) to surface areas intended as walk-on surfaces.

A6.3.6.2 WARNING: Products qualified to MIL-PRF-24667 Type I, II, or IV, Composition G are applied in a relatively thick coat and contain solvents that will negatively affect the adhesion of the primer MIL-DTL-53022 Type IV if applied too soon i.e. before the primer "Dry Hard" condition has been reached. Therefore, the non-skid product must be applied no sooner than the dry hard condition of the primer and its dry hard condition must be reached within a period of time that will allow for the application of the topcoat within 24 hours of the application of the primer.

A6.3.7 **Topcoat**

A6.3.7.1 Exterior Surfaces

A6.3.7.1.1 A liquid polyurethane topcoat meeting the requirements of specification MIL-DTL-64159 Type II (latest edition) or a finish powder coating meeting the requirements of MIL-PRF-32348 Type III Class I, colour #34094 (flat green) as per AMS-STD-595 (latest edition) must be applied to exterior surfaces including exterior walk-on surface areas having non-skid coating.

A6.3.7.1.2 WARNING: Powder coatings requiring a cure temperature above 180°C must not be applied over composite materials, MIL-PRF-24667 Type I, II, or IV, Composition G non-skid or MIL-DTL-53022 Type IV epoxy based coatings.

A6.3.7.2 Interior Surfaces

A6.3.7.2.1 An epoxy topcoat meeting the requirements of specification MIL-PRF-22750 Type II, Class H, Grade B (latest edition), colour #17925 (gloss white) as per AMS-STD-595 (latest edition) must be applied to interior surfaces including walk-on surface areas with non-skid coating.

A6.3.7.2.2 Powder primers that do not require a finish coating and meeting the requirements of MIL-PRF-32348 Type II Class I (latest edition), colour #17925 (gloss white) as per AMS-STD-595 (latest edition) intended for direct to metal in a single application can also be used on interior surfaces.

A6.3.7.2.3 WARNING: Powder primer coatings requiring a cure temperature above 180°C must not be applied over composites or MIL-PRF-24667 Type I, II, or IV, Composition G non-skid epoxy based coatings.

A6.3.7.3 Interior surfaces of parts that could be directly exposed to chemical agents such as hatches, ramps and doors must be coated as per paragraph A6.3.7.1 above.

A6.3.7.4 WARNING: The topcoats must not be applied before the “Dry Hard” condition of the non-skid material has been reached and must be applied within 24 hours after the application of the primer. There must be no walking on non-skid surfaces for a period of 7 days to allow full cure of the coating system.

A6.3.8 **Marking and Touch-Up**

A6.3.8.1 Marking

A6.3.8.1.1 Markings identifying the vehicle/equipment information, the flag, numbering and lettering must be performed with a touch-up coating kit meeting MIL-DTL-64159 Type III (latest edition) and AMS-STD-595 (latest edition) colour #37030 (flat black). Markings must be applied directly over the CARC system topcoat following its cleaning, if required, with a 2% weight TSP in potable water solution followed by a potable water rinse and then an acetone wipe & dry.

A6.3.8.2 Touch-Up

A6.3.8.2.1 For defects or damages to the CARC system that expose the substrate it is required to clean the area to be reworked; for this purpose use a 2% weight TSP in potable water solution followed by a potable water rinse and then an acetone wipe & dry. For metallic components it is then required to remove rust or corroded metal by sanding using an 80 grit paper or a mechanically driven steel brush (if a steel brush is used it will be required to clean again the surface as described above). For composite materials, hand-scuff using a 180 grit paper. Remove sanding dust with a clean dry paint brush and apply a coat of primer meeting the requirements of specification MIL-DTL-53022 Type V (latest edition); feather-in with the existing primer. Touch-up of the topcoat must be performed (at the dry-to-touch condition of the touch-up primer) with a touch-up coating kit meeting MIL-DTL-64159 Type III (latest edition) and AMS-STD-595 (latest edition) colour #34094 (flat green); feather-in with the existing topcoat.

A6.3.8.2.2 For defects or damages to the CARC system that expose the primer it is required to clean the area to be reworked; for this purpose use a 2% weight TSP in potable water solution followed by a potable water rinse and then

an acetone wipe & dry. Hand-scuff the primer and surrounding topcoat using a 180 grit scuffing paper. Touch-up of the topcoat must be performed with a touch-up coating kit meeting MIL-DTL-64159 Type III (latest edition) and AMS-STD-595 (latest edition) colour #34094 (flat green); feather-in with the existing topcoat.

A6.3.9 **Selection of Materials, Mixing and Application**

A6.3.9.1 Materials used must be selected from the applicable qualified products list (QPL/QPD) and must be mixed and applied as per the manufacturers' Technical Data Sheet (except for MIL-DTL-53022 Type IV (latest edition) DFT when applied direct to metal (see para A6.3.5.1). The brand name and QPL/QPD number of the materials used must be reported to the Technical Authority/Project Configuration Manager for CAF configuration, health, and safety purposes after acceptance of First Article Test Report.

A6.3.10 **Special Measures for Equipment Manufacturers / Painting Contractors**

A6.3.10.1 In any instance where the CARC system specified herein interferes with the design features of specific components that are key to the operation of the equipment, it is the manufacturer's responsibility to identify and propose a suitable alternative coating system having high chemical agent resistance and corrosion protection properties. The brand name of the approved alternative coating system materials must be reported to the TA.

A6.3.10.2 Deviations from CARC products and application processes identified herein as well as deviations from the product manufacturer Technical Data Sheet must be reported to the TA for their evaluation and approval.

# TECHNICAL PROPOSAL REQUIREMENTS

# AND BID EVALUATION

# FOR THE

# WATER TREATMENT SYSTEM

NOTICE

This documentation has been reviewed by the technical authority and does not contain controlled goods. Disclosure notices and handling instructions originally received with the document must continue to apply.

AVIS

Cette documentation a été révisée par l'autorité technique et ne contient pas de marchandises contrôlées. Les avis de divulgation et les instructions de manutention reçues originalement doivent continuer de s'appliquer.

## TABLE OF CONTENTS

# 1.0 GENERAL

## 1.1 Introduction

1.1.1 This document is split in two parts and defines the criteria that will be used to determine the winning bid for the procurement of the Water Treatment System (WTS).

1.1.1.1 The first part, Technical Proposal Requirements, defines the information required from the Bidders for their proposal to be evaluated.

1.1.1.2 The second part, Bid Evaluation, defines the evaluation process Canada will undertake.

# 2.0 TECHNICAL PROPOSAL REQUIREMENTS

## 2.1 Responding to Evaluation Criteria

2.1.1 Bidders must provide the information required for each listed requirement in accordance with the method identified in the “Compliance Documentation Required” column in the Evaluation of Key Mandatory Requirements table(s).

2.1.1.1 The following compliance methods define the information required:

2.1.1.1.1 **Compliance Statement (CS)** - Where “CS” is identified, the Bidder must describe in detail how the equipment offered fully complies with the requirement. Supporting documentation must be provided describing completely and in detail how the requirement is met or addressed. Bidders must provide with their technical bid, a document indicating clearly where the substantial information for each of the sections identified below can be found].

2.1.1.1.2 **Draft (DR)** - Where “DR” is identified, the Bidder must provide a draft of the requested document to describe in detail how the equipment offered fully complies with the requirement.

2.1.2 For each listed requirement, the Bidder must provide a response in the “Bidder’s Response/References” column in the Evaluation of Key Mandatory Requirements table(s) to clearly explain how the requirement is met, either by including the specific reference to indicate where in their proposal the information is found or including the complete response directly in that column.

2.1.3 For the purpose of this solicitation, a “Bidder’s Team” include all entities whose experience is being used to meet the evaluation criteria of this bid.

2.1.3.1 Where a Bidder cites experience, Canada will only consider this experience if the experience is accessible to the Bidder and the Bidder can rely upon and use the experience in the performance of any resulting Contract. The Bidder is required to demonstrate this agreement is in place at the time of bid submission.

2.1.3.2 Experience listed without providing any supporting data to describe where, how and by whom such experience was obtained, or failure to demonstrate that the

Bidder has an agreement in place with the entity that has that experience, that experience may not be considered for evaluation purposes.

# 3.0 BID EVALUATION

## 3.1 Bid Selection Methodology

3.1.1 It is Canada's desire to achieve an optimal capability at lowest possible cost. Therefore, a "Lowest Cost Compliant" approach will be employed for this acquisition process. Selection of the winning proposal will be based on the proposed lowest cost, provided that it meets all mandatory requirements and meets a minimum of 40 points in the point-rated criteria.

3.1.2 The Public Service Procurement Canada (PSPC) Contract Authority (CA) will screen the bids for completeness, misplaced financial information and compliance with the general terms and conditions. The technical section of the compliant bids will then be provided to the Bid Evaluation Team for evaluation of technical compliance.

3.1.3 All valid bids will be evaluated against key mandatory requirements, detailed in this Annex B, in order to determine technical compliance.

## 3.2 Technical Evaluation of Compliance

3.2.1 Evaluation of Key Mandatory Requirements

3.2.1.1 The evaluation team will use the Bidder's submitted proposal to determine compliance against key mandatory requirements. See the Evaluation of Key Mandatory Requirements table for more details.

3.2.2 Evaluation of Point-Rated Criteria

3.2.2.1 The evaluation team will evaluate system bids as outlined in the Bidder Worksheet – Section 3.4. Only bids that are compliant with Section 2.1 will be point-rated.

3.2.2.2 DND reserves the right to verify details of any supporting documents provided by the bidder with the listed customer point of contact.

3.2.2.3 For Point Rated Criteria 1, additional points awarded will be cumulative so long as the point rated criteria is assessed as met. A maximum of 30 points can be awarded.

3.2.2.4 For Point Rated Criteria 2 through 5, a single set of points will be awarded, either the lower value of points or higher value of points, but not both, so long as the point rated criteria is assessed as met.

3.2.3 Assessment

3.2.3.1 Results of compliance and non-compliance will be provided through PSPC CA.

## 3.3 Glossary

3.3.1 In the bid evaluation grids below, terms used are defined as follows:

3.3.1.1 "Mobile" is defined as a standalone system capable of being transported by road, air and sea, and operated in a new location repeatedly without degradation of performance.

3.3.1.2 A "fleet" is defined as ten (10) or more systems.

3.3.1.3 "Major equipment" is defined as a system having a monetary value of at least $500,000 (CAD) per unit.

3.3.1.4 A "heavy trailer" is defined as 2.5 ton GTW or greater.

## 3.4 Evaluation of Key Mandatory Requirements

| Serial | Requirement Reference(s) | Requirement Description | Compliance Documentation Required<br>**CS** - Compliance Statement<br>**SD** - Supporting documents<br>**DR** - Draft | Bidder's Response/References | Compliance (This column is for the Evaluation Team only) | |
|---|---|---|---|---|---|---|
| | | | | | "C" | "NC" |
| M1 | | The organization within the Bidder's Team that will design and engineer the water filtration and treatment modules of the WTS, must have delivered a minimum of three (3) different water purification systems within the last 15 years, each having met or exceeded one or more of the following requirements:<br><br>1. Treat high salinity source water (minimum of 25,000 ppm Total Dissolved Solids (TDS)).<br>2. Treat high levels of organic compounds (minimum Dissolved Organic Carbon (DOC) of 15 mg/L).<br>3. Treat source water containing high levels of heavy metals (as an example: 25 mg/L of arsenic).<br><br>For each of the above systems the bidder must provide:<br>• Project overview<br>• Source water parameters<br>• System design including detailed description of filtrate systems used in the system<br>• Performance specifications<br>• Resultant water parameters<br>• Customer point of contact for the system | SD | | | |

| Serial | Requirement Reference(s) | Requirement Description | Compliance Documentation Required<br>**CS** - Compliance Statement<br>**SD** - Supporting documents<br>**DR** - Draft | Bidder's Response/References | Compliance (This column is for the Evaluation Team only) | |
|---|---|---|---|---|---|---|
| | | | | | "C" | "NC" |
| M2 | | The Bidder's Team must have manufactured a "fleet" of "major equipment" for a NATO military customer within the last ten (10) years.<br><br>The Bidder must provide the following:<br>• A description of the system that was manufactured<br>• Number of systems manufactured<br>• Date that the systems were manufactured<br>• Monetary value of the system that was manufactured<br>• A customer point of contact for the system that was manufactured | CS and SD | | | |
| M3 | | The Bidder's Team must demonstrate that it has designed, tested and manufactured a minimum of three (3) different fleets of "heavy trailers" within the past ten (10) years.<br><br>The Bidder must provide the following:<br>• A description of the trailers that were delivered<br>• Number of trailers delivered in each fleet<br>• Date that the trailer fleets were delivered<br>• Contract value of each of the trailer fleets<br>• A customer point of contact for each of the trailer fleets that were delivered | CS and SD | | | |

| Serial | Requirement Reference(s) | Requirement Description | Compliance Documentation Required<br>**CS** - Compliance Statement<br>**SD** - Supporting documents<br>**DR** - Draft | Bidder's Response/References | Compliance (This column is for the Evaluation Team only) | |
|---|---|---|---|---|---|---|
| | | | | | "C" | "NC" |
| M4 | | The Bidder's Team must demonstrate that it has delivered Integrated Logistics Support (see Annex A SOW) including Technical Publication Packages, Provisioning Documentation, and Training Sessions for a NATO military customer for a "major equipment" "fleet" in the last ten (10) years.<br><br>The Bidder must provide the following:<br>• A description of the "major equipment" for which Integrated Logistics Support was provided<br>• Number of systems comprising the "fleet"<br>• Monetary value of the "major equipment"<br>• Date that the sustainment was provided<br>• A customer point of contact for the fleet that was sustained | CS and SD | | | |
| M5 | | The Bidder's Team must demonstrate that it has provided a minimum of three (3) years of continuous in-service sustainment of a "major equipment" "fleet" for a customer in the last ten (10) years.<br><br>The Bidder must provide the following:<br>• A description of the "major equipment" that was sustained<br>• Number of systems comprising the "fleet"<br>• Monetary value of the "major equipment"<br>• Date that the sustainment was provided<br>• A customer point of contact for the fleet that was sustained | CS and SD | | | |

| | | | | | |
|---|---|---|---|---|---|
| M6 | | The Bidder must submit conceptual drawings and specification sheets for their proposed WTS.<br><br>The drawings and specification sheets must illustrate and detail the WTS components and principal systems as outlined in Appendix 1.0 to ANNEX A, WTS Technical Specification, Para A1.2 WTS Components Requirements.<br><br>In addition, the Bidder must ensure that their proposal for the WTS covers the following details and design parameters:<br>a. The physical configuration and layout of the WTS includes all the functional areas outlined in Appendix 1.0 to ANNEX A, WTS Technical Specification.<br>b. The proposed WTS meets the size restrictions outlined in Appendix 1.0 to ANNEX A, WTS Technical Specification, Para A1.3.2 Size.<br>c. The proposed WTS meets the weight restrictions outlined in Appendix 1.0 to ANNEX A, WTS Technical Specification, Para A1.3.1 Weight.<br>d. An initial power budget of the WTS is complete resulting in a proposed power generation system that meets the power requirements of the WTS.<br>e. The requirements of the Trailer are understood including the physical and electrical interface with the two (2) MSVS prime movers.<br>f. Human factors has been considered from the perspective of accessibility for both the operation, access and maintenance of the WTS.<br>g. The proposed Water Filtration and Treatment System includes all of the functionality outlined in Appendix 1.0 to ANNEX A, WTS Technical Specification, Para A1.2.1.4 Water Filtration and Treatment System, and is technically sound and logical in thought. | DR | | |
| M7 | | The Bidder's Team must demonstrate the capacity to produce a minimum of three (3) WTS per month. | DR | | |

| Serial | Requirement Reference(s) | Requirement Description | Compliance Documentation Required<br>**CS** - Compliance Statement<br>**SD** - Supporting documents<br>**DR** - Draft | Bidder's Response/References | Compliance (This column is for the Evaluation Team only) | |
|---|---|---|---|---|---|---|
| | | | | | "C" | "NC" |
| | | The Bidder must provide the following:<br>• A conceptual production floor plan<br>• A production line layout and description<br>• A production schedule<br>• Quality control description<br>• Supply system and logistics description<br>• Past production experience description that supports this requirement | | | | |

## 3.5 Evaluation of Point-Rated Criteria

| ID | Criteria | Points | Bidder's Team Self-Assessment | Compliance Documentation Required<br>**CS** - Compliance Statement<br>**SD** - Supporting documents<br>**DR** - Draft | Bidder's Response Reference |
|---|---|---|---|---|---|
| PR1 | The organization within the Bidder's Team that will design and engineer the water filtration and treatment modules of the WTS, has delivered a water purification system within the last 15 years that:<br>1. Treats high salinity source water (minimum of 45,000 ppm).<br>2. Treats high levels of organic compounds (minimum Dissolved Organic Carbon of 20 mg/L).<br>3. Is "mobile" as defined in paragraph 3.3.1.1.<br>4. Is containerized in an ISO Container (seacan, bicon or quadcon).<br>5. Is a "fleet" as defined and paragraph 3.3.1.2 that has been delivered to a NATO nation.<br>6. Treats Nuclear, Biological and Chemical (NBC) agents. | <br><br><br><br>**5**<br>**5**<br>**5**<br>**5**<br>**5**<br>**5** | | CS and SD | |
| PR2 | The Bidder's Team has manufactured two (2) "fleets" of "major equipment" for a NATO military customer within the last ten (10) years.<br><br>The Bidder must provide the following:<br>• A description of the system that was manufactured | **5** | | CS and SD | |

| | | | | | |
|---|---|---|---|---|---|
| | • Number of systems manufactured<br>• Date that the systems were manufactured<br>• Monetary value of the system that was manufactured<br>• A customer point of contact for the system that was manufactured | | | | |
| | The Bidder's Team has manufactured three (3) "fleets" of "major equipment" for a NATO military customer within the last ten (10) years.<br><br>The Bidder must provide the following:<br>• A description of the system that was manufactured<br>• Number of systems manufactured<br>• Date that the systems were manufactured<br>• Monetary value of the system that was manufactured<br>• A customer point of contact for the system that was manufactured | **8** | | | |
| PR3 | The Bidder's Team has designed, tested and manufactured five (5) or six (6) different "fleets" of "heavy trailers" within the past ten (10) years.<br><br>The Bidder must provide the following:<br>• A description of the trailers that were delivered<br>• Number of trailers delivered in each fleet<br>• Date that the trailer fleets were delivered<br>• Contract value of each of the trailer fleets<br>• A customer point of contact for each of the trailer fleets that were delivered | **5** | | CS and SD | |
| | The Bidder's Team has designed, tested and manufactured seven (7) or more different "fleets" of "heavy trailers" within the past ten (10) years. | **8** | | | |

| | | | | | |
|---|---|---|---|---|---|
| | The Bidder must provide the following:<br>• A description of the trailers that were delivered<br>• Number of trailers delivered in each fleet<br>• Date that the trailer fleets were delivered<br>• Contract value of each of the trailer fleets<br>• A customer point of contact for each of the trailer fleets that were delivered | | | | |
| PR4 | The Bidder's Team demonstrates that it has delivered Integrated Logistics Support (see Annex A SOW) including Technical Publication Packages, Provisioning Documentation, and Training Sessions for a NATO military customer on two (2) different "major equipment" "fleets" in the last ten (10) years.<br><br>The Bidder must provide the following:<br>• A description of the "major equipment" for which Integrated Logistics Support was provided<br>• Number of systems comprising the "fleet"<br>• Monetary value of the "major equipment"<br>• Date that the sustainment was provided<br>• A customer point of contact for the fleet that was sustained | **5** | | CS and SD | |
| | The Bidder's Team demonstrates that it has delivered Integrated Logistics Support (see Annex A SOW) including Technical Publication Packages, Provisioning Documentation, and Training Sessions for a NATO military customer on three (3) or more different "major equipment" "fleets" in the last ten (10) years.<br><br>The Bidder must provide the following:<br>• A description of the "major equipment" for which Integrated Logistics Support was provided | **8** | | | |

| | | | | | |
|---|---|---|---|---|---|
| | • Number of systems comprising the "fleet"<br>• Monetary value of the "major equipment"<br>• Date that the sustainment was provided<br>• A customer point of contact for the fleet that was sustained | | | | |
| PR5 | The Bidder's Team demonstrates that it has provided a minimum of three (3) years of continuous in-service sustainment of two (2) "major equipment" "fleets" for a customer in the last ten (10) years.<br><br>The Bidder must provide the following:<br>• A description of the "major equipment" that was sustained<br>• Number of systems comprising the "fleet"<br>• Monetary value of the "major equipment"<br>• Date that the sustainment was provided<br>• A customer point of contact for the fleet that was sustained | **5** | | CS and SD | |
| | The Bidder's Team demonstrates that it has provided a minimum of three (3) years of continuous in-service sustainment of three (3) or more "major equipment" "fleets" for a customer in the last ten (10) years.<br><br>The Bidder must provide the following:<br>• A description of the "major equipment" that was sustained<br>• Number of systems comprising the "fleet"<br>• Monetary value of the "major equipment"<br>• Date that the sustainment was provided<br>• A customer point of contact for the fleet that was sustained | **8** | | | |

# STATEMENT OF WORK

# FOR THE SUPPORT OF THE

# WATER TREATMENT SYSTEM

NOTICE

This documentation has been reviewed by the technical authority and does not contain controlled goods. Disclosure notices and handling instructions originally received with the document must continue to apply.

AVIS

Cette documentation a été révisée par l'autorité technique et ne contient pas de marchandises contrôlées. Les avis de divulgation et les instructions de manutention reçues originalement doivent continuer de s'appliquer.

## Revision History

| Revision | Date | Notes |
|---|---|---|
| Revision 1 | May 10, 2019 | Original |

## TABLE OF CONTENTS

# 1.0 SCOPE

## 1.1 Purpose

1.1.1 The purpose of this Statement of Work (SOW) is to describe DND's requirements for work to be carried out by the Contractor, including the provision of material and Repair & Overhaul (R&O), in support of the Water Treatment System (WTS).

1.1.2 Work will be conducted and completed either in Canada at Canadian Armed Forces (CAF) locations, at operational sites where CAF are deployed, or at the Contractor's plant.

## 1.2 Support Timelines

1.2.1 The timelines for the work and provision of material within this Support SOW will relate to the 'First Delivery' milestone from the Acquisition Contract, as the support would only be needed once equipment is initially delivered.

## 1.3 Background

1.3.1 More often than not, the equipment will be intermittently used, but crucial when needed to support on-going Canadian Armed Forces (CAF) operations.

## 1.4 Concept of Operations & Support

1.4.1 The Concept of Operations provides context necessary to fully understand the SOW.

| Aspect | Description |
|---|---|
| Operational Environment and System Description | The WTS is a part of the Advanced Sub-unit Water Purification System (ASUWPS) Project. The WTS includes:<br>• 70 Water Treatment Units (WTU);<br>• 70 Miscellaneous Equipment Units (MEU);<br>• 70 Trailers;<br>• 13 Arctic Sustainment Units (ASU);<br>• 40 Water Storage Units (WSU);<br>Water is an essential combat supply and the lessons learned from operations over the last several decades has proven that it is not prudent to trust local water sources. These operations have been characterized by large geographic areas of operation with dispersed troops necessitating the requirement for a water purification system at the sub-unit level (up to 250 personnel). |
| Intended Use | The WTS is intended to dramatically improve the ability of the CAF to provide drinking water for its soldiers at the sub-unit level. It will replace the existing obsolete sub-unit water purification systems and increase the overall number of systems to fully enable Regular and Reserve Force units to sustain themselves in domestic and international operations. It will be used across the spectrum of operations including war, peacekeeping and humanitarian assistance.<br>The WTS is intended to be a self-contained and rapidly deployable water purification and treatment system. To increase operational flexibility and ease of deployment, the principal components of the WTS, namely the |

| Aspect | Description |
|---|---|
| | WTU, MEU, ASU and WSU, will be packaged in quadcon ISO containers (one quarter length of the standard 20 foot long ISO container). The Trailer is intended to transport up to two (2) quadcon ISO containers. |
| Location of Supported Systems | The WTS (WTU, MEU and Trailer) will reside in the following locations spread across Canada (**QTY 4** WTS per location/region except where stated):<br>1. 37 Combat Engineer Regiment (CER) – St. John's NL<br>2. 36 CER – Shearwater NS and Sydney NS<br>3. 4 Engineer Support Regiment (4 ESR) – Canadian Forces Base (CFB) Gagetown NB<br>4. Canadian Forces School of Military Engineering (CFSME) – CFB Gagetown NB<br>5. 5e Régiment de génie de combat (5 RGC) – CFB Valcartier QC<br>6. 35 RGC – Quebec City QC<br>7. **QTY 3** – 2 Airfield Engineer Squadron – Baggotville QC<br>8. 34 RGC – Montreal QC and Rouyn Noranda QC<br>9. 33 CER – Ottawa ON<br>10. 2 CER – CFB Petawawa ON<br>11. **QTY 6** – Canadian Joint Operations Command (CJOC) Disaster Assistance Response Team (DART) – CFB Trenton ON<br>12. 32 CER – Toronto ON<br>13. 31 CER – Waterloo ON and St. Thomas ON<br>14. 38 CER – Saskatoon SK<br>15. 1 CER – CFB Edmonton AB<br>16. 41 CER – Edmonton AB and Calgary AB<br>17. **QTY 1** – 4 Construction Engineer Squadron – Cold Lake AB<br>18. 39 CER – Chilliwack BC and Trail BC<br>The WTS (ASU and WSU) will reside in depot, except for the 4 ASUs that will be held at the Contractor site. |
| Anticipated service life | 20 years |
| DND Responsibilities for Maintenance | The WTS will be maintainable by CAF operators and technicians in a field environment as prescribed for each item of equipment:<br>The WTU, ASU and WSU will be maintainable by CAF operators and technicians in both field and base environments, with maintenance tasks generally divided as follows:<br>**Operator Maintenance** – consisting generally of simple tasks such as preliminary diagnosis of faults, visual inspections, consumables replenishment and cleaning.<br>**Technician Maintenance, First Line** – consisting of preventive and minor corrective maintenance tasks by repair or replacement of parts, in the field, using the standard maintenance tools of the EME and WFE trades and any provided with the WTU, ASU or WSU. Task duration generally less than four (4) hours. |

| Aspect | Description |
|---|---|
| | The WTS Trailer will be maintainable by CAF operators and technicians in both field and base environments, with maintenance tasks generally divided as follows:<br><br>**Operator Maintenance** – consisting generally of simple tasks such as preliminary diagnosis of faults, visual inspections, minor preventive and corrective maintenance, and cleaning. Task duration less than one (1) hour.<br><br>**Technician Maintenance, First Line** – consisting of preventive and minor corrective maintenance tasks by repair or replacement of parts, in the field, using the standard maintenance tools of the EME and WFE trades and any provided with the WTS Trailer. Task duration generally less than four (4) hours.<br><br>**Technician Maintenance, Second Line** – consisting of major corrective maintenance requiring additional tools, specialized personnel, STTE, controlled environmental conditions or specific infrastructure requirements. Task duration generally between four (4) and twenty-four (24) hours. |
| Contractor Responsibilities for Maintenance | The more in-depth maintenance tasks, consisting of corrective maintenance tasks, reconditioning of assemblies and component rebuilds, will be done through this support contract. |
| Contractor Training Responsibility | Contractor will provide Operator and Technician training as and when required. Training material is being provided through the Acquisition Contract. |
| Levels of Spares (Fleet Support and Operational Spares Kits) | The support concept includes the following spares for support:<br><br>**Fleet Support Spares** (FSS) – These spares will be kept and maintained at the Contractor site and used to support the fleet. They can be used by Contractor FSRs during repair tasks, for faster turn-around time (TAT) during R&O, and in 'repair by replacement' situations, where the repair can be done in the field or when parts are required so rarely that they would not be stocked in depot, and the cost is minimal compared to the transport cost of shipping equipment back for R&O Maintenance Support at the Contractor's site.<br><br>**Operational Spares Kits** –Base Operating Spares Kit (BOSK) is the collection of operational deployment spares held in reserve in pre-positioned storage.<br><br>The BOSK will be held domestically with DART at CFB Trenton and in operation will be deployed to a base which supports the forward deployments.<br><br>The BOSK will contain some of the higher cost & long lead time items, allowing for replacement of the main components.<br><br>FSS will be used to replenish any lost or damaged items within the Operational Spares Kits while they are deployed. |

## 1.5 ‘CORE’, ‘R&O’, and ‘TASKING’

1.5.1 Some of the support activities will be CORE (designated within section 3.0 **CORE REQUIREMENTS** within the SOW).

1.5.2 The Contractor must also perform R&O maintenance work (designated within section 4.0 **R&O REQUIREMENTS** within the SOW) as a pre-authorized R&O repair using a Selection Notice and Priority Summary (SNAPS) procedure that does not exceed the maximum repair cost (MRC).

1.5.3 Finally, the Contractor must perform work in response to TASKINGs (designated within section 5.0 **TASKING REQUIREMENTS** within the SOW) initiated by DND and Public Service and Procurement Canada (PSPC), through the DND 626 Task Authorization process.

## 1.6 Land Equipment Management System

1.6.1 The Contractor should be familiar with the Land Equipment Management System (LEMS) that is documented in B-GL-342-001/FP-000, which describes the DND approach to the management of land equipment.

## 1.7 Contractors Performing R&O

1.7.1 Some of the work performed by the Contractor will be repair and overhaul of equipment. The *Special Instructions Repair and Overhaul Contractors* (A-LM-184-001/JS-001) describes the instructions and procedures governing civilian contractors engaged in the R&O of material on behalf of the DND.

## 1.8 Acronyms and Abbreviations

| | |
|---|---|
| AAS | Accountable Advance Spares |
| ASU | Arctic Sustainment Unit |
| AWR | Additional Work Request |
| BOSK | Base Operating Spares Kit |
| CA | Contracting Authority |
| CAF | Canadian Armed Forces |
| CER | Combat Engineer Regiment |
| CAGE | Commercial and Government Entity |
| CARC | Chemical Agent Resistant Coating |
| CDRL | Contract Data Requirements List |
| CFB | Canadian Forces Base |
| CFSD | Canadian Forces Supply Depot |
| CFSME | Canadian Forces School of Military Engineering |
| CFTO | Canadian Forces Technical Order |
| CGCS | Canadian Government Cataloguing System |
| CIS | Contract Issue Spares |
| CORE | Designates CORE (fixed price basis) requirements |
| COTS | Commercial off the Shelf |
| CRPA | Contractor Repair Parts Account |
| CRCI | Catalogue of Repairable and Consumable Items |
| CSA | Canadian Standards Association |
| CSR | Contract Status Report |
| DGLEPM | Director General Land Equipment Program Management |
| DID | Data Item Description |
| DND | Department of National Defence |
| DRMIS | Defence Resources Management Information System |
| DSCO | Director Supply Chain Operations |
| EHS | Environmental Health and Safety |
| EMS | Environmental Management System |
| EMT | Equipment Management Team |
| ESR | Engineer Support Regiment |
| FOSK | Forward Operating Spares Kit |
| FSS | Fleet Support Spares |
| FSR | Field Service Representative |
| GFOS | Government Furnished Overhaul Spares |

| | |
|---|---|
| IAW | In Accordance With |
| ILS | Integrated Logistic Support |
| IP | Intellectual Property |
| ITAR | International Traffic in Arms Regulations |
| LEMS | Land Equipment Maintenance System |
| MEU | Miscellaneous Equipment Unit |
| MRC | Maximum Repair Cost |
| MS | Microsoft |
| NATO | North Atlantic Treaty Organization |
| NCAGE | NATO Commercial and Government Entity |
| NDHQ | National Defence Headquarters |
| NDQAR | National Defence Quality Assurance Region |
| NSN | NATO Stock Number |
| NTM | Notice to Move |
| OEM | Original Equipment Manufacturer |
| OS | Operating System |
| OSP | Operating Support Plan |
| PA | Procurement Authority |
| PDF | Portable Document Format |
| PSPC | Public Service and Procurement Canada |
| R&O | Repair and Overhaul |
| RbR | Repair by Replacement |
| RCE | Repair Cost Estimate |
| RGC | Régiment de génie de combat |
| RMA | Repair Material Account |
| RSA | Repair Shop Account |
| SMP | Support Management Plan |
| SNAPS | Selection Notice and Priority Summary |
| SOW | Statement of Work |
| SPTD | Supplementary Provisioning Technical Documentation |
| STTE | Special Tools and Test Equipment |
| TA | Technical Authority |
| TASKING | Designates TASKING (as and when needed) requirements |
| TAT | Turn-around-time |
| TDP | Technical Data Package |
| TDPL | Technical Data Plan & List |

| | |
|---|---|
| TIES | Technical Investigation and Engineering Studies |
| TPM | Technical Problem Management |
| WSU | Water Storage Unit |
| WTS | Water Treatment System |
| WTU | Water Treatment Unit |

# 2.0 APPLICABLE DOCUMENTS

## 2.1 References

2.1.1 Whereas mentioned, the following Standards must be used for the preparation of deliverables to the extent specified in this SOW:

| REFERENCE NUMBER | PROMULGATION DATE | REFERENCE TITLE |
|---|---|---|
| A-LM-184-001/JS-001 | 2016-01-30 | SPECIAL INSTRUCTIONS REPAIR AND OVERHAUL CONTRACTORS |
| ANSI/EIA-649-C | 2019 | CONFIGURATION MANAGEMENT STANDARD |
| B-GL-342-001/FP-000 | 2001-09-10 | LAND EQUIPMENT MANAGEMENT SYSTEM (LEMS) |
| C-02-005-009/AM-000 | 2013-06-01 | INSPECTION AND CONDITIONING OF MATERIAL RETURNED TO AND HELD IN THE SUPPLY SYSTEM |
| D-01-100-214/SF-000 | 1991-11-05 | SPECIFICATION FOR PREPARATION OF PROVISIONING DOCUMENTATION FOR CANADIAN FORCES EQUIPMENT |
| D-01-400-001/SG-000 | 1979-07-05 | STANDARD - ENGINEERING DRAWING PRACTICES FOR CLASS 1 DRAWINGS AND TECHNICAL DATA LIST |
| D-LM-008-001/SF-001 | 1983-02-03 | METHODS OF PACKAGING |
| D-LM-008-002/SF-001 | 1991-08-01 | SPECIFICATION FOR MARKING FOR STORAGE AND SHIPMENT |
| D-LM-008-011/SF-001 | 1988-11-10 | PREPARATION AND USE OF PACKAGING REQUIREMENTS CODES |
| SOR/99-7 | 1998 | OZONE-DEPLETING SUBSTANCES REGULATIONS, 1998 |

## 2.2 Order of Precedence

2.2.1 In the event of conflict between the content in this SOW and the referenced documents, the content of this SOW will take precedence.

# 3.0 CORE REQUIREMENTS

## 3.1 General

3.1.1 Logistics Statements of Work

3.1.1.1 The Logistics Statement of Work is attached herein and forms part of this SOW, and is listed as Annex I.

3.1.2 Environmental Health and Safety

3.1.2.1 General

3.1.2.1.1 Environmental Health and Safety (EHS) considerations must be incorporated into the decision-making process for the work performed under this Contract.

3.1.2.1.2 The Contractor must provide for and allow DND inspection and monitoring of EHS documentation throughout the life of the contract.

3.1.2.1.3 New or amended support documentation created by the Contractor must incorporate appropriate EHS warnings and instructions in direct relation of the EHS risks presented in the contents. The Contractor must ensure that revisions to specifications, standards, technical publications and test programs are reviewed for EHS compliance.

3.1.2.1.4 The Contractor must provide (when asked) and ensure the use of up-to-date (no older than three (3) years) Material Safety Data Sheets.

3.1.2.2 Environmental Management System (EMS) Requirement

3.1.2.2.1 The Contractor must have an environmental management system in place to control environmental impacts resulting from their activities, products or services that is consistent with ISO 14001 – Environmental Management Systems; Requirements with Guidance for Use. Certification to this standard is preferred but not necessary. The Technical Authority will have the right to make examinations and such audits of the EMS.

3.1.2.2.2 The EMS requirement is applicable to the Contractor, however the Contractor must make reasonable effort to monitor that all subcontractors are in compliance with applicable environmental laws and regulations.

3.1.2.3 Halocarbons

3.1.2.3.1 Halocarbons, as identified within the Ozone-Depleting Substances Regulations (SOR/99-7), must not be incorporated into the operation or maintenance of equipment, products, or support services.

3.1.2.4 Mercury

3.1.2.4.1 The Contractor must not replace an existing component or add a new equipment component containing mercury, when a mercury-free alternative exists.

3.1.2.4.2 For each case where the products must contain mercury or its compounds, the Contractor must submit a statement that it is not technically feasible to use a mercury-free product in its place, and explain why.

3.1.2.4.3 Where the products contain mercury or its compounds, in all shapes or forms, or where its operation or maintenance requires the use of mercury or its compounds, the Contractor must provide in tabular format, to the Technical Authority (TA), the information specified in Appendix A4.0 for each occurrence of mercury or its compounds.

## 3.2 Program Management

### 3.2.1 General

3.2.1.1 Contractor Test Facilities

3.2.1.1.1 The Contractor must possess or have access to testing facilities required to confirm serviceability of the equipment after repair or upgrade work on the WTS or its equipment.

3.2.1.2 Contractor Publication Resources

3.2.1.2.1 The Contractor must have office resources necessary to produce electronic manuals, technical drawings, and other logistics and engineering documentation.

### 3.2.2 Contract Reporting

3.2.2.1 The Contractor must provide a Contract Status Report (CSR) in accordance with (IAW) Contract Data Requirement List (CDRL) WTS-PM-001 at Appendix A2.3 (page 46) and its associated Data Item Delivery (DID) WTS-PM-001 at Appendix A3.3 (page 53).

3.2.2.2 The Contractor must, upon request, make supporting data for the CSR available to the DND EMT and PSPC CA.

### 3.2.3 Program Meetings

3.2.3.1 Meeting Organization and Coordination

3.2.3.1.1 The Contractor must ensure that the necessary data, personnel and facilities are available for each meeting.

3.2.3.1.2 As appropriate, meetings may be held at the Contractor's or DND facilities at the discretion of the DND EMT.

3.2.3.1.3 The Contractor's Program Manager must be present at all meetings. If the Program Manager does not have final approval authority for decision making and changes, then the person that has that final approval authority must also be present at all meetings.

3.2.3.2 Kick-off Meeting

3.2.3.2.1 The Contractor must hold and chair, along with Canada, a Kick-off Meeting no later than 21 calendar days after contract award, to review and secure a common understanding of the requirements expressed in this contract.

3.2.3.3 Contract Performance Review Meetings

3.2.3.3.1 The Contractor must hold and chair, along with Canada, Contract Performance Review Meetings at intervals of no greater than six (6) months or as otherwise agreed to with DND/PSPC.

3.2.3.3.2 The Contractor must address the following topics at each Contract Performance Review Meeting:

3.2.3.3.2.1 Discuss contract status, management, and financial aspects of the contract, also drawing information from the CSR DID Section A: Contract Status, Appendix A3.3 (page 53).

3.2.3.3.2.2 Discuss the status of the WTS and its associated equipment, the extent of its usage, and all anticipated surges in operations.

3.2.3.3.2.3 A Support Performance Review to discuss the Support delivered since the last reporting period, drawing information from the CSR DID Section B: Support Summary, Appendix A3.3 (page 53).

3.2.3.3.2.4 Address all external changes impacting contract performance, such as commitments for deployment(s) made by DND, and

3.2.3.3.2.5 Identify and determine the actions required for longer-term planning of contract management activities and the provision of support.

3.2.3.4 Other meetings

3.2.3.4.1 The Contractor and the DND EMT may schedule informal reviews, such as conference calls, webinars (conference calls augmented by simultaneous PowerPoint presentations on the Internet), video conferences, briefings and technical interchange meetings, as required to help achieve the requirements of the contract.

3.2.3.5 Meeting Documentation

3.2.3.5.1 The Contractor must provide Meeting Agendas IAW CDRL WTS-PM-002 at Appendix A2.4 (page 47) and its associated DID WTS-PM-002 at Appendix A3.4 (page 57).

3.2.3.5.2 The Contractor must record and provide the Meeting Minutes IAW CDRL WTS-PM-003 at Appendix A2.5 (page 48) and its associated DID WTS-PM-003 at Appendix A3.5 (page 59).

3.2.3.5.3 No change in the interpretation of the program management, SOW, cost, or schedule, as defined in the contract, may be authorized by the minutes of a meeting. Such change must require formal contract amendment by the CA.

3.2.4 Government Property

3.2.4.1 All equipment / spares / parts that may be provided to the Contractor in support of the WTS, must be considered DND-owned, regardless of being held at the Contractor's facility.

3.2.4.1.1 Government-owned and DND-owned must be considered as interchangeable terms.

3.2.4.2 The Contractor must provide suitable protections, such as a separated secure storage facility and insurance, to protect all Government Supplied Materials, including equipment, spares, parts, Technical Data Package (TDP), documentation, software, special tools and test equipment.

3.2.5 Hazardous Materials

3.2.5.1 The Contractor must be solely responsible for the handling, transportation and disposal of all waste, and hazardous waste material generated as a result of the work in this Statement of Work.

## 3.3 Operating Support

3.3.1 Operator and Technical Personnel

3.3.1.1 In order to provide satisfactory Operator and Technical Personnel (Field Service Representatives & Mobile Repair Parties are possibly the same resources), the Contractor must provide the following:

3.3.1.1.1 Operator and Technical Personnel that can provide training on the WTS.

3.3.1.1.2 Operator and Technical Personnel that can work extended hours and during holidays.

3.3.1.1.3 Operator and Technical Personnel that can perform in-depth maintenance on the WTS.

3.3.1.1.4 Operator and Technical Personnel that can mentor and advise CAF operators and technicians in the performance of their tasks using the WTS.

3.3.1.1.5 Operator and Technical Personnel that are knowledgeable of the Contractor's engineering and support organization and able to obtain a quick response to queries regarding technical concerns and material status.

3.3.2 Notice to Move – FSRs

3.3.2.1 When CAF military units are issued the initial operational Notice to Move (NTM) instructions, the DND EMT will provide direction to the Contractor regarding the action required of it with respect to support of the WTS, and will keep the Contractor informed of the staging of the deployment.

3.3.2.2 For deployment of the FSRs, the Contractor must have:

3.3.2.2.1 FSR resources ready to travel to a domestic (within Canada) destination in no more than 14 calendar days.

3.3.2.2.2 FSR resources ready to travel to an out-of-country destination in no more than 28 calendar days.

3.3.2.2.2.1 The actual arrival time will depend on the situation, such as the required use of DND transportation, or the speed at which the deployed WTS(s) will arrive at the destination.

## 3.4 Engineering Support

### 3.4.1 General

3.4.1.1 The Contractor must provide Engineering Support for the WTS, its equipment and all associated items as listed in Appendix A1.0 To the SOW, but continuing the Engineering Support as the configuration evolves, as described in ANNEX C section 3.4.2.

### 3.4.2 Configuration Management

3.4.2.1 The Contractor must control changes to the configuration of the WTS and its equipment, and identify and maintain a record of the configuration of the WTS, its equipment and all associated items.

3.4.2.2 To propose changes to the configuration of the WTS, the Contractor must submit an Engineering Change Proposal (ECP) in Contractor format, following the guidance in ANSI/EIA-649-C.

3.4.2.3 The Contractor must track and report the status of the configuration changes (to both hardware and software) within the CSR.

### 3.4.3 Technical Data Management

3.4.3.1 The Contractor must log, store, protect, and control the distribution of technical data received from DND, sub-Contractors, OEMs, vendors, or other sources.

3.4.3.2 The Contractor must maintain the publications identified in the Technical Data table of Appendix A1.0 To ANNEX C, and incorporate DND-issued amendments and OEM amendments that have been approved by the DND EMT, and update the publications after obsolescence and configuration management changes.

3.4.3.3 The Contractor must provide a Technical Data Plan & List IAW CDRL WTS-PM-004 at Appendix A2.6 (page 49) and its associated DID WTS-PM-004 at Appendix A3.6 (page 60).

3.4.3.3.1 The Contractor must continue to manage the list throughout the contract term.

3.4.3.3.2 Along with the Technical Data List, the Contractor must provide CD/DVD(s) of the electronic versions of the Technical Data on the list, as per CDRL WTS-PM-004 at Appendix A2.6 (page 49) and its associated DID WTS-PM-004 at Appendix A3.6 (page 60).

3.4.3.3.3 The Contractor must incorporate the copyright symbol and one of the following notices into all Foreground and Background information that is

subject to copyright regardless of the form or medium upon which it is recorded:

3.4.3.3.3.1 IP in Foreground that belongs to the Contractor: "© (insert year) (insert IP owner). This deliverable was delivered under Contract no. XXXX and contains Foreground IP. Her Majesty the Queen in Right of Canada has a royalty-free and perpetual license to the IP and is permitted to use, reproduce, modify, and translate, including authorizing contractors to reproduce, modify, and translate, in whole or in part the deliverable for all government purposes including competitive tendering. Refer to the contract terms for additional details as required."

3.4.3.3.3.2 IP in Background Information: "© (insert year) (insert IP owner). This deliverable was delivered under Contract no. XXXX and contains Background IP. Her Majesty the Queen in Right of Canada has a royalty-free and perpetual license to the Background IP for the purpose of exercising its rights in the Contract deliverables and Foreground Information. The license includes the rights to use, reproduce, modify, and translate this deliverable, and further includes the right to authorize others to use, reproduce, modify, and translate, in whole or in part the deliverable for all government purposes including competitive tendering. Refer to the contract terms for additional details as required."

3.4.3.4 The Contractor must provide **electronic copies** of the Technical Data publications, **within forty-eight (48) hours**, after revisions/amendments are made and quality is assured, if the revisions/amendments made are:

3.4.3.4.1 For aspects of health, safety or security of personnel who will use the equipment.

3.4.3.4.2 For proper operation or maintenance of equipment or the WTS.

3.4.3.5 The Contractor must implement document revisions, updating the document's change page, and ensuring correct and current data is issued for use.

3.4.3.6 The Contractor must have Technical Data publications translated as per ANNEX C section 3.4.4.

3.4.3.7 The Contractor must provide a means of disaster recovery, including maintaining and keeping current an off-site, secure backup of all technical data.

3.4.4 Official Language Requirements

3.4.4.1 The Contractor must keep both the English and Canadian French versions of bilingual technical publications up to date and make changes simultaneously to both versions.

3.4.4.2 The Contractor must have publications translated by certified translators, such as members of an authorized provincial association of translators, to ensure the quality of translated text.

3.4.4.3 The Contractor must ensure all translations are consistent with approved DND terminology. Approved terminology sources, in order of priority, are as follows:

3.4.4.3.1 Canadian Oxford Dictionary Second Edition (for English);

3.4.4.3.2 Le Petit Robert Edition 2017 (for French); and

3.4.4.3.3 Termium, PSPC Translation Bureau Linguistic Data Bank (http://www.termiumplus.gc.ca/);

3.4.4.4 The Contractor must review and accept responsibility for the validity of all (both their own and all sub-Contractors) information found in the Technical Publications.

3.4.5 Technical Problem Management

3.4.5.1 The Contractor must, no later than 28 calendar days after contract award, establish a Technical Problem Management (TPM) database and associated management procedures to identify, investigate and resolve technical problems with the WTS.

3.4.5.1.1 This database must enable technical problem reports to be generated and continuously monitored, and be summarized in the CSR.

3.4.5.2 The Contractor must ensure that:

3.4.5.2.1 Detected problems (such as equipment defects, publication deficiencies, and unsatisfactory conditions, software faults or viruses, discrepancies in inventory, process inadequacies, excessive repair turn-around times, and parts obsolescence issues) are recorded in problem reports.

3.4.5.2.2 Problems are classified by category and priority.

3.4.5.2.3 Problems are analyzed to determine their root cause, including potential system, hardware and software failures/faults, errors in publications, inadequate training, procedure inadequacies, and unresponsiveness of supporting organizations.

3.4.5.2.4 Corrective action undertaken to resolve the problem(s) is tracked and documented.

3.4.5.3 The Contractor must bring urgent (eg. Health & safety, time-sensitive, costly) technical problems to the immediate attention of the DND EMT via email and, if necessary, telephone call.

3.4.5.4 The Contractor must make recommendations regarding ways to reduce costs, product improvement, and failure investigations, submitted in proposal format to DND, and must include cost of the work proposed, justification for the work, and the business case to support the work. (If implemented, this will be done through a TASKING.)

## 3.5 Maintenance Support

3.5.1 Maintenance Information Database

3.5.1.1 The Contractor must maintain a Maintenance Information Database.

3.5.1.2 The Contractor must include within the Maintenance Information Database:

3.5.1.2.1 The serial numbers used in each instance of WTS equipment.

3.5.1.2.2 The modification status of each serial numbered item of equipment.

3.5.1.2.3 Forecast requirements for scheduled maintenance, based on preventive maintenance requirements.

3.5.1.2.3.1 If available, the DND EMT will provide the Contractor with system level estimates of operating hours of usage, bearing in mind the potential range of circumstances from storage to surge.

3.5.1.2.3.2 These estimates will be reviewed every six (6) months at the Contract Performance Review Meetings as per ANNEX C paragraph 3.2.3.3 (if they have been provided by the DND EMT).

3.5.1.2.4 Detailed Invoices for each serial-numbered equipment received for R&O.

3.5.1.3 The Contractor must use the Maintenance Information Database to manage its maintenance activities and to prepare summary information to be included in the CSR.

3.5.2 Care of Fleet Support Spares

3.5.2.1 The Contractor must ensure that the items in the FSS, as defined in Appendix A1.0 List of Items to be Supported (page 37), are maintained in a serviceable state and are preserved and packaged for long term storage.

3.5.3 Care of Arctic Sustainment Units (ASUs) Held by the Contractor

3.5.3.1 The Contractor must ensure that the ASUs, as defined in Appendix A1.0 List of Items to be Supported (page 37), are maintained in a serviceable state and are preserved and packaged for long term storage.

3.5.4 Detailed Inspection and Maintenance

3.5.4.1 The Contractor must include the results of this Detailed Inspection and Maintenance in the CSR.

3.5.4.2 WTS (WTU, MEU and Trailer) Fielded in the Regiments

3.5.4.2.1 Due to intermittent use and the potential for undocumented exceptional events, the Contractor must perform, occurring every two (2) years (so 50% of the fleet each year), a detailed inspection and maintenance, following the manufacturer's instructions for use and inspection, of the WTS fielded in the regiments, as defined in Appendix A1.0 List of Items to be Supported (page 37).

3.5.4.2.2 When DND requires the Contractor to perform this detailed inspection and maintenance, the DND EMT will notify the Contractor accordingly via a TASKING, since the cost will vary depending on the situation encountered.

3.5.4.3 ASUs Held by the Contractor

3.5.4.3.1 The Contractor must perform a yearly detailed inspection and maintenance, following the manufacturer's instructions for use and inspection, for the ASUs held by the Contractor, as defined in Appendix A1.0 List of Items to be Supported (page 35).

## 3.6 Supply Support

3.6.1 Contractor Warehouse Resources

3.6.1.1 The Contractor must have personnel, secured space, shelving, fixtures, storage aids, material handling and other resources necessary to provide inventory management and supply services.

3.6.2 Inventory Management

3.6.2.1 Contractor must review the inventory (potentially comparing it to provisioning data, and the subsequent usage data) to meet the needs of on-going operations, anticipated surges, possible FSRs, and R&O activities and report concerns in the CSR.

3.6.2.2 The Contractor must have access to inventory for support of its R&O work, as defined in Appendix A1.0 List of Items to be Supported (page 37), based on the required Repair Turn-Around-Time defined at ANNEX C section 4.1.4.1, or as otherwise indicated in the Appendix A1.0 List of Items to be Supported (page 37);

3.6.2.3 The Contractor must manage FSS holdings, as defined in Appendix A1.0 List of Items to be Supported (page 37);

3.6.3 Catalogue for the Provision of Repairable and Consumable Items

3.6.3.1 The Contractor must provide the Catalogue of Repairable and Consumable Items IAW CDRL WTS-ILS-201 at Appendix A2.7 (page 50) and its associated DID WTS-ILS-201 at Appendix A3.7 (pg. 62).

3.6.3.1.1 DND will use this catalogue, through TASKING(s), for the provision of repairable and consumable items.

3.6.3.1.2 The Contractor must update the Catalogue for the Provision of Repairable and Consumable Items if parts become obsolete, see ANNEX C para. 3.6.4.1.

3.6.4 Obsolescence Management

3.6.4.1 The Contractor must conduct Obsolescence Management to ensure uninterrupted support of the equipment.

3.6.4.1.1 The Contractor must work with Original Equipment Manufacturers (OEMs) and vendors to maintain awareness of what parts are becoming obsolete, and determine a source of supply for repairable and consumables items.

3.6.4.2 Obsolete part replacement will be handled as a TASKING request, further described in ANNEX C para. 5.3.3.2.

3.6.5 DND-Owned Stock Supply Logistics

3.6.5.1 The Contractor must refer to the Logistics SOW in Annex I, and A-LM-184-001/JS-001 Section 8.2, for further requirements for equipment logistics for DND-owned equipment.

3.6.5.2 Supply Accounts for DND-owned Stock

3.6.5.2.1 The Contractor will be allocated a Repairable Material Account (RMA). All material (generally prime equipment and Line Replaceable Units that are DND-owned) shipped to the Contractor must be identified in the Defence Resource Management Information System (DRMIS) against the assigned RMA.

3.6.5.3 Contract Issue Spares

3.6.5.3.1 The Contractor must maintain visibility of DND-owned stock, classified as Contract Issue Spares (CIS).

3.6.5.3.1.1 To account for these CIS, the Contractor will be allocated a Contractor Repair Parts Account (CRPA) and a Repair Shop Account (RSA).

3.6.5.4 Stock Control and Stock Taking (DND-owned Stock)

3.6.5.4.1 The Contractor must perform stock control and stocktaking of DND-owned Contractor held inventory, including:

3.6.5.4.1.1 Institute, maintain and apply a system for inventory accounting, control, storage and handling, preservation, protection and maintenance.

3.6.5.4.1.2 Designate, allocate and prepare a storage area in its facility specifically to accommodate DND-owned stock.

3.6.5.4.1.3 As a risk mitigation measure, in case of a strike or lockout action, ensure that DND has continued access to, and protection of, inventory that it requires in support of operations.

3.6.5.4.1.4 Initiate and complete a one hundred per cent (100%) manual stocktaking (visual confirmation) of RMA, RSA, CRPA (CIS) and all material listed in the Contractor Held Inventory Report, one (1) time each year.

3.6.5.4.1.5 The Contractor must promptly investigate discrepancies arising from the DND-owned inventory of materiel managed by the Contractor and must immediately notify DND of any deficiencies discovered.

## 3.7 Personnel Support Resources

3.7.1 Plant Shutdown/Vacation Period

3.7.1.1 Prior to plant shutdown and vacation periods, the Contractor must arrange for adequate facilities/personnel to be available to ensure the satisfaction of urgent TASKING(s).

3.7.1.2 If the Contractor personnel are not on-site during shutdown, a list of names and home phone numbers, of those Contractor personnel to be contacted during plant closure, must be provided to the DND EMT and NDQAR.

3.7.1.3 The Contractor must continue to meet the requirements and timelines within this SOW regardless of Plant Shutdown/Vacation Periods.

# 4.0 R&O REQUIREMENTS

## 4.1 Maintenance Support

4.1.1 General

4.1.1.1 The terms ‘repair’ and ‘overhaul’ are defined as follows:

4.1.1.1.1 Repair - The identification and correction of those specific defects which degrade the performance of an item, causing it to function below its specification or not as described in its operations manual.

4.1.1.1.2 Overhaul - The restoration of an item to its original condition and life expectancy. It includes the replacement of worn, damaged or life expired parts; the incorporation of approved modifications; and the rework of components as necessary.

4.1.1.2 The Contractor must provide Maintenance Support, including Repair and Overhaul (R&O), for the repairable items listed in A1.0 List of Items to be Supported (page 37).

4.1.1.3 The Contractor must perform R&O in accordance with this SOW, A-LM-184-001/JS-001 Special Instructions Repair and Overhaul Contractors, and the Quality Assurance requirements stated in ANNEX C section 4.1.3, such that the CAF will be provided with functional, safe and reliable WTS.

4.1.1.4 The Contractor must use parts and materials as per the most recent or OEM design configuration.

4.1.1.4.1 Changes to the parts, equipment configuration, or design must be approved by the TA, and executed in accordance with the SOW.

4.1.2 Extent of R&O Maintenance

4.1.2.1 The Contractor must provide R&O Maintenance support to the extent listed here:

4.1.2.1.1 Materials - All equipment system components must be inspected and repaired as required. Defective components shall be repaired or replaced.

4.1.2.1.2 Mechanical - All mechanical systems must be inspected and repaired as required. Defective components must be repaired or replaced.

4.1.2.1.3 Electrical - All electrical components must be inspected, tested and repaired as required. Defective components must be repaired or replaced.

4.1.2.1.4 Safety - All systems/components affecting the safety of the user/operator or those affecting hazardous operation of the equipment must be inspected and tested for correct operation. Defective components must be replaced. All warning decals, labels, data plates must be clear and legible.

4.1.3 Quality Assurance

4.1.3.1 Quality of R&O Work

4.1.3.1.1 The R&O must be performed in accordance with this SOW and the Quality Assurance requirements stated herein, such that the CAF will be provided with functional, safe and reliable equipment. In the case of differences among these references, this SOW takes precedence.

4.1.3.2 Quality Assurance Representative

4.1.3.2.1 All stages of the R&O procedures will be subject to inspection by a Canadian Government DND Quality Assurance Representative unless DND authorizes otherwise. The representative will monitor for best industrial practices and will have the authority to stop work if poor practices or dangerous conditions are noted and cannot be resolved on-site.

4.1.3.3 Testing and Inspection

4.1.3.3.1 The Contractor must perform testing to confirm serviceability for each piece of repaired/overhauled equipment.

4.1.3.3.2 The Contractor must prepare a test report in the Contractor's format. A copy of the report must be retained by the Contractor and a copy forwarded electronically to the TA.

4.1.3.3.3 The Contractor must visually inspect all completed equipment for security of components and hazardous conditions, and all deficiencies must be noted and repaired.

4.1.4 Repair Turn-Around-Time (TAT)

4.1.4.1 The Contractor must complete repairs **within ninety (90) calendar days from receipt**, unless otherwise indicated in Appendix A1.0 List of Items to be Supported (page 37) or by the DND EMT.

4.1.4.1.1 The repair TAT includes all the time that the item requiring repair is in the custody of the Contractor, from receipt at the handover point to return to the handover point.

4.1.4.2 In the case of a priority repair request, system-level refurbishment, or battle damage repair, the DND EMT will provide a SOW defining the scope of work and new schedule, as a TASKING.

4.1.5 Repair Cost Estimates (RCE)

4.1.5.1 Upon receipt of the Repairable Items indicating an RCE, as shown items in Appendix A1.0 List of Items to be Supported (page 37), the Contactor must provide an RCE including all labour, sub-contracting and shipping, materiel costs and administration fees to the TA for approval before the repair can proceed.

4.1.5.2 If DND provides spare parts to the Contractor, or spare parts are already Contractor Held and Managed, the Contractor must deduct the value of the parts from the RCE of the item for which the parts are intended.

4.1.6 Maximum Repair Cost

4.1.6.1 The Maximum Repair Cost (MRC) is defined as "The maximum amount authorized that includes all labour and material costs, to be expended to repair an item." It is a guard against the possibility of an item being repaired at a cost that exceeds its value to DND, and **should not** be interpreted as the amount that DND necessarily intends to pay.

4.1.6.2 For each Repairable Item indicating an MRC, as shown in Appendix A1.0 List of Items to be Supported (page 37), the Contractor must not exceed the MRC without authorization from the DND EMT.

4.1.6.3 If DND provides spare parts to the Contractor, or spare parts are already Contractor Held and Managed, the Contractor must deduct the value of the parts from the MRC of the item for which the parts are intended.

4.1.7 Condemn/Scrapping Considerations

4.1.7.1 If it is decided not to repair the equipment, the DND EMT will provide guidance on scrapping procedures to the Contractor at that time.

4.1.7.2 If the equipment contains embedded software (and possibly data) it may be necessary to erase the stored software and data prior to disposing of the equipment. In such cases, the Contractor must seek direction from the DND EMT.

4.1.7.3 When DND-owned equipment is to be scrapped, the Contractor must take care to comply with all International Traffic in Arms Regulations (ITAR) regarding the disposal method used and record keeping.

4.1.7.3.1 Guidance on disposal is available through assigned Demilitarization Codes.

4.1.8 Calibration Requirements

4.1.8.1 The Contractor must ensure that all items and equipment they receive for maintenance, requiring calibration, are calibrated by an accredited organization for the class of testing appropriate to the equipment.

4.1.9 CARC Painting

4.1.9.1 Equipment may require repainting or touching up (depending on condition upon receipt). The Contractor must perform Chemical Agent Resistant Coating (CARC) painting work in accordance with **ANNEX A Appendix 6 – Statement of Work for Chemical Agent Resistant Coating System**.

4.1.9.2 The Contractor must utilize best painting procedures in accordance with the paint manufacturer's recommendations, and the finished product must produce a durable finish and a smooth appearance free from runs, sag, and orange peel.

4.1.10 Software Maintenance

4.1.10.1 The Contractor must perform routine software maintenance including software installation, data load and unload, backup and recovery, release replication and distribution.

4.1.11 Provision of Material (R&O)

4.1.11.1 The Contractor must obtain the parts (repairable and consumable items) required for the R&O Maintenance Support, including locating sources of supply.

4.1.11.2 The Contractor must obtain and make available parts for **'Repair by Replacement'** (RbR) situations, where the repair can be done in the field.

4.1.11.2.1 As the WTS will not have reached a steady-state with predictable maintenance and repair expectations at the execution of this Support Contract, DND will stock the depot with minimal spare parts for the support of the WTS during this interim support period.

4.1.11.2.2 RbR parts would also apply for parts that are required so rarely that they would never be stocked in depot, and the cost is minimal compared to the transport cost of shipping the WTS back for R&O Maintenance Support at the Contractor's site.

4.1.11.2.3 RbR parts would be requested on an as and when required basis that will be detailed in a DND 626 Task Authorization.

# 5.0 TASKING REQUIREMENTS

## 5.1 Operating Support

5.1.1 Operator and Technical Personnel

5.1.1.1 The Contractor must provide Operator and Technical Personnel that have the security clearance necessary to participate in deployed DND/CAF operations, including secured military field environments and deployed camps/forward operating bases (In-Theatre).

5.1.2 Operational Spares Kits

5.1.2.1 The Contractor must provide Base Operating Spares Kits (BOSKs), where each BOSK enables a military unit, or Contractor staff, to sustain a deployed WTS in continuous operations for 90 calendar days without re-supply.

5.1.2.2 If DND requires the Contractor to purchase more Operational Spares Kits, or replenish Operational Spares Kits, the DND EMT will notify the Contractor accordingly via a TASKING (see ANNEX C section 5.3.2.1).

5.1.2.3 For the Operational Spares Kits, the Contractor must provide:

5.1.2.3.1 The equipment and spares, as detailed in Appendix A1.0 List of Items to be Supported (page 37) of this SOW, needed to support Operator Maintenance and Technician Maintenance that would occur during deployment.

5.1.2.3.2 Special tools and test equipment, as detailed in Appendix A1.0 List of Items to be Supported (page 37) of this SOW, needed to support Operator Maintenance and Technician Maintenance that would occur during deployment.

5.1.2.3.3 Additional items that would be needed if the Contractor provided Field Service Representative (FSR) support, including regular tool kits, as DND tools might not be available.

5.1.2.3.4 Packaging (see ANNEX C section 5.1.2.4 and 5.1.2.5) and organizational systems (e.g. Shelving, supports, item list and locator) allowing for safe transport of and quick access to the equipment, spares and tools.

5.1.2.4 The Contractor must provide Operational Spares Kits packaged and packed as per D-LM-008-001/SF-001 following:

5.1.2.4.1 Level B Limited Military Package; and

5.1.2.4.2 Level B Limited Military Pack;

5.1.2.5 The Contractor must label the packaging, produced under 5.1.2.4 above, as per D-LM-008-002/SF-001, using D-LM-008-011/SF-001 to prepare the required packaging and preservation codes.

5.1.2.6 The Contractor must provide information regarding the content of the Operational Spares Kits in the Catalogue of Repairable and Consumable Items, see ANNEX C section 3.6.3.1.

## 5.2 Engineering Support

5.2.1 Technical Investigation and Engineering Support

5.2.1.1 The Contractor must provide TIES, when and as requested by DND. Such tasks could include:

5.2.1.1.1 Conducting specialized testing;

5.2.1.1.2 Performing specialist engineering studies, such as human factors, survivability, electromagnetic interference / compatibility, safety and health, reliability and maintainability;

5.2.1.1.3 Providing engineering assessments and recommendations (for example, regarding trends, failures (including repetitive failures), defects, safety hazards, corrosion, and technology insertion);

5.2.1.1.4 Developing alternate or supplementary operating, maintenance, and supply procedures;

5.2.1.1.5 Rationalizing the preventive maintenance requirements in areas where there is a potential for significant improvements in maintenance effectiveness or efficiency;

5.2.1.1.6 Preparing technical bulletins and preparing supporting technical data;

5.2.1.1.7 Developing repair schemes for potential repairs not covered in maintenance manuals;

5.2.1.1.8 Preparing additional publications or amendments to existing publications;

5.2.1.1.9 Translating technical publications into either Canadian official language (English or Canadian French);

5.2.1.1.10 Performing post battle damage assessments, and determine how to return equipment to a serviceable state, or if it can be cannibalized for parts;

5.2.1.1.11 Designing and developing modifications / upgrades / conversions, updating drawings, preparing modification installation instructions and providing modification installation kits;

5.2.1.1.12 Investigating software faults, and viruses, and develop solutions. Update software embedded in the system or its associated equipment, and

5.2.1.1.13 Assessing regulatory compliance, especially regarding safety and protection of the environment.

5.2.1.1.14 Obtain CSA/UL or equivalent safety certifications for the equipment that has been modified or repaired through the work under this contract.

5.2.1.2 A TIES request may be initiated by either Canada or by the Contractor, but **must not commence prior to receipt of an approved DND 626 Task Authorization**. In support of each TIES request, the Contractor must provide the following information:

5.2.1.2.1 The scope and objectives of the TIES TASKING;

5.2.1.2.2 The estimated duration;

5.2.1.2.3 Depending upon the nature of the TASKING, the appropriate reporting frequency and report format;

5.2.1.2.4 All other requirements applicable to the type of engineering effort, and

5.2.1.2.5 The estimated cost.

5.2.1.3 On completion of the TIES, the Contractor must report its findings to the DND TA within fourteen (14) calendar days, or another timeframe agreed to by the DND TA.

## 5.3 Supply Support

5.3.1 Provision of Material (Fleet Support Spares)

5.3.1.1 The Contractor must acquire and replenish FSS holdings in the inventory when requested by DND.

5.3.2 Provision of Material (Operational Spares Kits)

5.3.2.1 The Contractor must purchase Operational Spares Kits, and replenish Operational Spares Kit holdings when requested by DND.

5.3.2.1.1 After deployment of the Operational Spares Kits, DND will return unused items within the kits to the Contractor for re-use within the replenished operational spares kits.

5.3.2.1.2 The Contractor must verify the Operational Spares Kit(s) fully-serviceable state before re-using the item in the Operational Spares Kits.

5.3.3 Provision of Material (DND request)

5.3.3.1 The Contractor must obtain spare parts (repairable and consumable items) or software, and provide them to DND for Operator or Technician Maintenance (see section 1.4 Concept of Operations & Support) activities when requested.

5.3.3.2 The Contractor must purchase replacement parts, for those parts that have become obsolete, for use in the WTS.

5.3.4 Packaging and Shipping

5.3.4.1 All parts and equipment supplied by the Contractor must be packaged and packed as per D-LM-008-001/SF-001.

5.3.4.1.1 The Contractor must select Preservation and Packaging Levels (Level A, Level B, or Level C) based on criteria set out in the referenced specification.

5.3.4.2 Packaging produced by the Contractor must be labeled as per D-LM-008-002/SF-001, using D-LM-008-011/SF-001 to prepare the required packaging and preservation codes.

5.3.5 Disposal of DND-owned Stock

5.3.5.1 The Contractor, when authorized by the DND EMT, must arrange and perform disposal of an equipment item.

5.3.5.2 The Contractor must conduct disposals, under the DND EMT authority, in accordance with applicable DND regulations, the Defence Production Act, and with applicable environmental laws and regulations.

5.3.5.3 Further requirements are stated in ANNEX C section 4.1.7, Condemn/Scrapping Considerations.

## 5.4 Training Support

5.4.1 Training Sessions

5.4.1.1 The Contractor must provide Training Sessions when requested by the DND EMT.

5.4.1.1.1 Scheduling of the Training Sessions will be jointly planned between the DND and the Contractor.

5.4.1.2 The Contractor must provide Operator Training Sessions (train-the-trainer type), given to from one (1) to 10 students per course, with a course length of four (4) days.

5.4.1.3 The Contractor must provide the Training Session(s) in English, by a bilingual instructor, in order for them to understand and answer questions from the class in both official languages; English and Canadian French.

5.4.1.4 The Contractor must provide Instructor(s) that are SMEs on the WTS equipment.

5.4.1.5 The Contractor must use the approved and accepted **WTS Operator Training Package**, identified in the Technical Data table of Appendix A1.0 to ANNEX C, for the Training Sessions, and course lessons must follow the content found within that training package.

5.4.1.5.1 The Contractor must supply the course material, specifically a Hard Copy of the Student Handout and Soft Copy CD of the training package for each student, and all course material must be provided in English and Canadian French.

5.4.2 Training Material

5.4.2.1 The Contractor must use the WTS(s) and additional training material identified in the **WTS Operator Package Instructor Lesson Plan** for the Training Session.

5.4.2.1.1 The Contractor must provide the additional training material that is listed in the **WTS Operator Training Package Instructor Lesson Plan** as 'supplied by the Contractor'.

5.4.2.1.2 The Contractor must set-up the WTS(s) and additional training material that is listed in the **WTS Operator Training Package Instructor Lesson Plan** as 'supplied by the Contractor', for the Training Session.

5.4.3 Update of Training Package

5.4.3.1 The Contractor must update or improve, when requested by DND, the **WTS Operator Training Package** after course delivery, to address comments received during the Training Sessions from students and instructors, or include additional operational scenarios making the delivered training more relevant to how the equipment is actually used in an operation.

# 6.0 CONTRACT DELIVERABLES

## 6.1 Repaired Material

6.1.1 The Contractor will receive direction from the TA for the final delivery destination of all repaired materiel on an individual basis; however, if not received the default delivery will be to 25 CFSD.

6.1.2 The Contractor must include a properly completed and signed CF942/CF942A Materiel Condition Tag/Label, when applicable, IAW C-02-005-009/AM-000 Inspection and Condition of Materiel Returned to and Held in the Supply System, for all returned items.

6.1.2.1 The CF942/CF942A Tags/Labels are to be directly attached to the materiel returned after repair and overhaul IAW C-02-005-009/AM-000, and will be provided by DND Quality Assurance Representative.

## 6.2 R&O Service Record and Test Report

6.2.1 The Contractor must provide an R&O Service Record and Test Report with each piece of equipment for shipment, returning from R&O.

## 6.3 Data Deliverable List

6.3.1 The Contractor must prepare and deliver all data and equipment required under the Contract as summarized in ANNEX C section 6.4.

6.3.2 Note: 'LOT' equates to the quantity needed to fulfill the requirements of the CDRL, including revisions, as necessary until accepted by DND.

## 6.4 List of Deliverables

| Item | Item Description | Initial Submission/ Delivery QTY | Subsequent Submissions / Replenishment |
|---|---|---|---|
| 1 | CORE Requirements – work performed continuously under a fixed price basis. | As defined in section 3.0 within Annex C | - |
| 2 | Contract Status Report (para 3.2.2.1) | LOT | Monthly - CSRs |
| 3 | Meeting Agenda (para 3.2.3.5.1) | LOT | LOT |
| 4 | Meeting Minutes (para 3.2.3.5.2) | LOT | LOT |
| 5A | Technical Data Plan & List (para. 3.4.3.3) | LOT | Semi-Annually – TDPL Section B |
| 5B | CD/DVD(s) of electronic versions of the Technical Data (para. 3.4.3.3.2) | - | Semi-Annually |
| 6 | Catalogue of Repairable and Consumable Items (para. 3.6.3.1) | LOT | Semi-annually |
| 7 | R&O Requirements – work performed as a pre-authorized R&O repair | As defined in section 4.0 Within Annex C | - |

| | | | |
|---|---|---|---|
| 8 | R&O Service Record and Test Report | LOT – with the equipment for shipment | LOT – with the equipment for shipment |
| 9 | TASKING Requirements – work performed through DND 626 Task Authorization process (as-and-when requested work). | As defined in section 5.0 within Annex C | - |

## 6.5 Data Format

6.5.1 Unless otherwise specified as a specific requirement, the Contractor must deliver all of the soft copies of data deliverables, in formats compatible with the office software currently in use by the DND as listed:

6.5.1.1 Microsoft (MS) Windows 7 Enterprise Operating System (OS), Service Pack 1;

6.5.1.2 MS Internet Explorer (IE) 9.0 with 256 Bit Encryption;

6.5.1.3 MS Office Professional Plus 2013 (Word, Excel, Access, PowerPoint and Outlook);

6.5.1.4 Adobe Acrobat X; and

6.5.1.5 WinZip 8.1 SR-1;

6.5.2 Those compatible formats must allow the files to be recognized, opened, and viewed or read in their intended form and format using DND's office software, along with allowing the user to modify, select, copy and paste information from the files to other DND office software files.

# A1.0 APPENDIX: LIST OF ITEMS TO BE SUPPORTED

## A1.1 Supported Equipment and Spares

A1.1.1 The Contractor must provide support for the equipment and spare items specified in Table 1 (below) in accordance with the SOW. An explanation of each column is detailed below:

A1.1.1.1 System Identifier MRN/OEM Part No – A unique identifier for the Item, as used in the applicable technical manuals or supply management system.

A1.1.1.2 Item Nomenclature – The name of the Item that may include Item class/group categories and functional descriptors.

A1.1.1.3 NATO Stock Number (NSN) – The 13-digit identifier used in NATO and allied cataloguing systems. The NSN will be included if the Item is to be ordered by DND.

A1.1.1.4 Regular or Free-Flow R&O by Item

A1.1.1.4.1 Repair Cost Estimate (RCE) – Identifies that the item will require a cost estimate before repairs or overhaul can begin.

A1.1.1.4.1.1 This is used for regular R&O when equipment is more complex so the TA requires more visibility on what is being proposed, has not yet reached steady-state and is therefore harder to predict typical repair costs/requirements, and repairs occur at a low rate.

A1.1.1.4.2 Maximum Repair Cost (MRC) – Identifies the maximum amount authorized that includes all labour and material costs, to be expended to repair an item. Repairs above the MRC must be approved by DND before any repair or overhaul work commences, standard Selection Notice Observation Message procedures as detailed in A-LM-184-001/JS-001 must apply.

A1.1.1.4.2.1 This is used for free-flow R&O when equipment repairs are well understood or are less complex, and are used for repairs that occur at a high rate.

A1.1.1.5 Repair TAT – Identifies the Repair TAT, if different from the general Repair TAT, as defined in the Support SOW at para. 4.1.3.1, indicating that this item is of greater importance to the operation of the WTS and therefore requires a faster turn-around. Repair TAT is indicated in calendar days, if left blank, then general Repair TAT is followed.

A1.1.1.6 FSS quantity to hold – Describes the quantity of each item that the Contractor will hold and maintain, or left blank, if item does NOT have a required sparing level quantity or category isn't applicable.

A1.1.1.6.1 FSS are used to support the fleet, both domestically or while on deployment, and can be used by the Contractor FSRs during repair tasks, for faster TAT during R&O.

A1.1.1.6.2 FSS are also used in RbR situations, where the repair can be done in the field or when parts are required so rarely that they would not be stocked in depot, and the cost is minimal compared to the transport cost of shipping equipment back for R&O Maintenance Support at the Contractor's site.

A1.1.1.7 Operational Spares Kits – Base Operating Spares Kit (BOSK) – Describes the collection of operational deployment spares, and quantities of each item, held in reserve in pre-positioned storage. If left blank the item is not included in the operational spares kits or category isn't applicable.

A1.1.1.7.1 The BOSK will be held domestically with DART at CFB Trenton, and in operation will be deployed to a base which supports the forward deployments.

A1.1.1.8 Detailed Inspection & Maintenance – Indicates which items will require a detailed inspection and maintenance, performed by the Contractor, following the manufacturer's instructions for use and inspection.

A1.1.1.8.1 Detailed Inspection & Maintenance (Insp. Maint.)

A1.1.1.8.1.1 'Y – WTS Equip. QTY' = yes, detailed inspection & maintenance required for the listed quantity of WTS Equipment.

A1.1.1.8.2 'N' or blank = no.

Table 1: Supported Equipment and Spares

**NOTE:** INFORMATION IN THIS TABLE WILL BE FINALIZED DURING THE ACQUISITION CONTRACT

| **Item Identifier MRN/OEM Part No. (1)** | **Item Nomenclature (2)** | **NSN (if item can be ordered) (3)** | **Regular or Free-Flow RCE/MRC (4)** | **Repair TAT (cal. Days) (5)** | **FSS (Qty. to hold) (6)** | **Operational Spares Kits (7)** | **Insp. Maint. (Y – WTS Equip. QTY) (8)** |
|---|---|---|---|---|---|---|---|
| | | | | | | **BOSK Qty.** | |
| | Water Treatment Unit (WTU) | | RCE | | | | Insp. Maint.<br>Y – Qty 40 in:<br>37 CER, 36 CER, 35 RGC, 34 RGC, and 33 CER, 32 CER, 31 CER, 38 CER, 41 CER, and 39 CER. |
| | Miscellaneous Equipment Unit (MEU) | | RCE | | | | Insp. Maint.<br>Y – Qty 40 in:<br>37 CER, 36 CER, 35 RGC, 34 RGC, and 33 CER, 32 CER, 31 CER, 38 CER, 41 CER, and 39 CER. |

| Item Identifier MRN/OEM Part No. (1) | Item Nomenclature (2) | NSN (if item can be ordered) (3) | Regular or Free-Flow RCE/MRC (4) | Repair TAT (cal. Days) (5) | FSS (Qty. to hold) (6) | Operational Spares Kits (7) BOSK Qty. | Insp. Maint. (Y – WTS Equip. QTY) (8) |
|---|---|---|---|---|---|---|---|
| | Trailer | | RCE | | | | Insp. Maint.<br>Y – Qty 40 in:<br>37 CER, 36 CER, 35 RGC, 34 RGC, and 33 CER, 32 CER, 31 CER, 38 CER, 41 CER, and 39 CER. |
| | Arctic Sustainment Unit (ASU) | | RCE | | | | Insp. Maint.<br>Y – Qty 4 in Contractor Facility |
| | Water Storage Unit (WSU) | | RCE | | | | |
| **Ancillary Equipment:** | | | | | | | |
| | Feed Water Hose | | | | 3 | 1 | |
| | Concentrate Water Hose | | | | 3 | 1 | |
| | Potable Water Hose | | | | 6 | 2 | |
| | Water Distribution Nozzle | | | | 6 | 2 | |
| | Feed Pump | | | | 6 | 2 | |
| | Distribution Pump | | | | 6 | 2 | |
| | Water Storage Tank | | | | 6 | 2 | |
| | Spill Kit | | | | 6 | 2 | |
| | Intake Strainer Assembly | | | | 6 | 2 | |
| | Exhaust Hose for Generator Set | | | | 3 | 1 | |
| | Life Preserver Vest | | | | 3 | 1 | |
| | Wading Overall | | | | 3 | 1 | |
| | Water Testing Kit, Chemical Agent | | | | 3 | 1 | |
| | Water Quality Analysis Kit | | | | 3 | 1 | |
| | Turbidity Verification Kit | | | | 3 | 1 | |
| **Cold Weather Ancillary Equipment:** | | | | | | | |
| | Electrically-Heated Feed Water Hoses | | | | 3 | 1 | |
| | Electrically-Heated Concentrate Hoses | | | | 3 | 1 | |
| | Electrically-Heated Potable Water Hoses | | | | 6 | 2 | |
| | Feed Water Pump Electrically-Heated Blanket | | | | 6 | 2 | |

| Item Identifier MRN/OEM Part No. (1) | Item Nomenclature (2) | NSN (if item can be ordered) (3) | Regular or Free-Flow RCE/MRC (4) | Repair TAT (cal. Days) (5) | FSS (Qty. to hold) (6) | Operational Spares Kits (7) BOSK Qty. | Insp. Maint. (Y – WTS Equip. QTY) (8) |
|---|---|---|---|---|---|---|---|
| | Distribution Pump Electrically-Heated Blanket | | | | 6 | 2 | |
| | Cold Weather Shelter | | | | 4 | 1 | |
| | Heater | | | | 4 | 1 | |
| **Trailer Electrical Components:** | | | | | | | |
| | Front Harness | | | | 10 | 4 | |
| | Mid Main Harness | | | | 5 | 2 | |
| | Rear Harness | | | | 5 | 2 | |
| | LED Markers | | | | 20 | 5 | |
| | LED SMP Taillight | | | | 30 | 6 | |
| | LED Licence Plate Lamp | | | | 10 | 3 | |
| **Trailer Axle Components:** | | | | | | | |
| | Axle Assembly | | | | 4 | 1 | |
| | Wheel Assembly | | | | 10 | 3 | |
| | Tire | | | | 20 | 6 | |
| | Wheel Bearings | | | | 20 | 6 | |
| **Trailer Brake Components:** | | | | | | | |
| | Brake Drum | | | | 10 | 4 | |
| | Brake Shoe | | | | 40 | 12 | |
| | Air Chamber | | | | 20 | 8 | |
| | Air Reservoir | | | | 4 | 2 | |
| | Coiled Air Hose | | | | 20 | 8 | |
| | Function Valve | | | | 4 | 2 | |
| | Brake Adjusters | | | | 10 | 4 | |
| **Trailer Suspension Components:** | | | | | | | |
| | Spring Assembly | | | | 10 | 4 | |
| **Trailer Structural Frame:** | | | | | | | |
| | Landing Gear | | | | 8 | 2 | |
| | Drawbar Assembly | | | | 4 | 1 | |

## A1.2 Supported Software Items

A1.2.1 The Contractor must provide support for the software Items specified in Table 2 (below) in accordance with the SOW. An explanation of each column is detailed below:

A1.2.1.1 Identifier MRN/OEM Part No – A unique identifier for the Item of software, or the hardware that it is hosted on.

A1.2.1.2 Item Nomenclature – The name of the Item that may include Item class/group categories and functional descriptors.

A1.2.1.3 Software version number – The version or revision number of the software item.

A1.2.1.4 SW Update – Requires software updates to DND/CAF (eg, may be part of regular upgrade program or to incorporate third party updates) in accordance with the Support SOW ('Y' = yes, 'N' or blank = no).

Table 2: Software Items

**NOTE:** INFORMATION IN THIS TABLE WILL BE FINALIZED DURING THE ACQUISITION CONTRACT

| Identifier MRN/OEM Part No. (1) | Item Nomenclature (2) | Software Version Number (3) | SW Update (Y/N) (4) |
|---|---|---|---|
| | | | |
| | | | |
| | | | |

## A1.3 Technical Data – Support Requirements

A1.3.1 The Contractor must provide support for the publications specified in Table 3 (below), including updated versions/editions of the Technical Data, in accordance with the SOW. An explanation of each column is detailed below:

A1.3.1.1 Publication Number – The unique identifier for the published Item of Technical Data.

A1.3.1.2 Title – The title of the item of Technical Data.

Table 3: Technical Data

**NOTE:** INFORMATION IN THIS TABLE WILL BE FINALIZED DURING THE ACQUISITION CONTRACT

| Publication Identifier (1) | Title (2) |
|---|---|
| TBD | WTS OPERATOR MANUAL |
| TBD | WTU OPERATOR QUICK REFERENCE CARD |
| TBD | WTS MAINTENANCE MANUAL |
| TBD | WTS PERMISSIVE REPAIR SCHEDULE AND STANDARD REPAIR TIMES |
| TBD | WTS ILLUSTRATED PARTS MANUAL |
| TBD | WTS OPERATOR TRAINING PACKAGE |
| TBD | WTU AND ASU TECHNICIAN TRAINING PACKAGE |
| TBD | WTS PRESERVATION, STORAGE AND REACTIVATION INSTRUCTIONS |
| TBD | WTS STOWAGE, SHIPPING, AND HANDLING INSTRUCTIONS |
| TBD | WTS DATA SUMMARY |
| TBD | MEU AND ASU STOWAGE MAP POSTERS |
| TBD | WTU PROCESS AND FLOW DIAGRAMS |
| TBD | PROVISIONING PARTS BREAKDOWN |
| TBD | SUPPLEMENTARY PROVISIONING TECHNICAL DOCUMENTATION |
| TBD | SPECIAL TOOL & TESTING EQUIPMENT |
| TBD | IDENTIFICATION PLATES |
| TBD | CONTROLLED & NON-CONTROLLED GOODS LIST |
| TBD | IDENTIFICATION LABELS FOR STORAGE AND SHIPMENT AND PACKAGING CODES |

# A2.0 APPENDIX: CONTRACT DATA REQUIREMENTS LIST

## A2.1 CDRL Item List

| CDRL # | Title | DID # |
|---|---|---|
| WTS-PM-001 | Contract Status Report | WTS-PM-001 |
| WTS-PM-002 | Meeting Agenda | WTS-PM-002 |
| WTS-PM-003 | Meeting Minutes | WTS-PM-003 |
| WTS-PM-004 | Technical Data Plan & List | WTS-PM-004 |
| WTS-ILS-201 | Catalogue of Repairable and Consumable Items | WTS-ILS-201 |

## A2.2 CDRL Table Definitions

The following section defines the various blocks of information found on the CDRL forms:

**BLOCK 1 – SYSTEM / ITEM**
Provides the name of the System or Item for which the CDRL applies.

**BLOCK 2 – ITEM NUMBER**
The Item Number is a sequential three-digit number to uniquely identify the individual data item (CDRL number). Note that the 001-099 series is reserved to Project Management (PM) CDRLs, the 101-199 series is reserved to Systems Engineering (SE) CDRLs and the 201-299 series is reserved to Integrated Logistics Support (ILS) CDRLs.

**BLOCK 3 - TITLE OR DESCRIPTION OF DATA**
The title of the data item being referred to in this CDRL.

**BLOCK 4 - AUTHORITY (DATA ITEM NUMBER)**
Indicates the Data Item Description (DID) number to which this CDRL refers.

**BLOCK 5 - CONTRACT REFERENCE**
The specific paragraph number of the Contract Demand, Statement of Work, Request for Proposal, Specification, or other applicable document to assist in identifying the work effort associated with the data item.

**BLOCK 6 - FREQUENCY**
This block indicates the frequency of the delivered data. The following frequency codes are used:

| | |
|---|---|
| ANNLY | Annually |
| ASGEN | As generated |
| ASREQ | As required |
| BI-MO | Every 2 months |
| BI-WK | Every2 weeks |
| DAILY | Daily |
| MNTHY | Monthly |
| ONE/R | One time with revisions |
| OTIME | One time |
| QRTLY | Quarterly |
| R/ASR | Revisions as required |
| SEMIA | Semi-annually |
| WKLY | Weekly |

**BLOCK 7 – REQUIRING OFFICE**
Identifies the technical office of primary interest responsible for defining the data requirement, reviewing, acceptance and approval of the data item, and ensuring the adequacy of the delivered data.

**BLOCK 8 – SUBMISSION SCHEDULE**

**DATE OF 1ST SUBMISSION -** The initial submission date or associated constraint for the 1st submission of the data item is indicated in this block using typical abbreviations as listed above under Block 11.

**DATE OF SUBSEQUENT SUBMISSION / EVENT -** The date(s) of subsequent submission(s) or associated constraint(s) of the data item is indicated in this block.

**BLOCK 9 - DISTRIBUTION AND ADDRESSEES**

Indicates the addressees and the respective number of copies (hard copies and soft copies separately), for either the draft or first submissions (Sub-Block “Draft”), and for the final or subsequent submissions (Sub-Block “Final”), for which the data item is required.

## A2.3 CDRL – Contract Status Report

| CONTRACT DATA REQUIREMENTS LIST | | |
|---|---|---|
| 1. SYSTEM / ITEM<br>Water Treatment System | | |
| 2. ITEM NUMBER<br>CDRL WTS-PM-001 | 3. TITLE OR DESCRIPTION OF DATA<br>Contract Status Report (CSR) | 4. AUTHORITY (Data Item Number)<br>DID WTS-PM-001 |
| 5. CONTRACT REFERENCE<br>SOW: **Para. 3.2.2.1 (pg. 16)**<br>DID: **App. A3.3 (pg. 53)** | 6. FREQUENCY<br>MNTHY | 7. REQUIRING OFFICE<br>DND EMT |

8. SUBMISSION SCHEDULE

**First Submission:** The Contractor must provide a draft CSR for review no later than 28 calendar days after the Kick-off Meeting.

**Response Time:** Comments on the draft CSR will be provided by Canada no later than 14 calendar days after receipt of the soft copy submission.

**Subsequent Submission(s):** The Contractor must provide a revised CSR, addressing Canada's comments, for review and possible acceptance no later than 7 calendar days after the receipt of Canada's comments.

**Response Time:** Comments or acceptance of the revised CSR will be provided by Canada no later than seven (7) calendar days after receipt of the soft copy submission.

**Monthly Submissions:** After acceptance by Canada, the Contractor must provide a CSR on a monthly basis throughout the contract.

9. DISTRIBUTION and ADDRESSEES

| A. ADDRESSEE | B. COPIES | | | |
|---|---|---|---|---|
| | DRAFT | | FINAL | |
| | Hard Copy | Soft Copy | Hard Copy | Soft Copy |
| DND TA | 0 | 1 | 0 | 1 |
| PSPC CA | 0 | 0 | 0 | 1 |
| DND PA | 0 | 0 | 0 | 1 |
| | | | | |
| | | | | |
| | | | | |

## A2.4 **CDRL – Meeting Agenda**

| CONTRACT DATA REQUIREMENTS LIST | | |
|---|---|---|
| 1. SYSTEM / ITEM<br>Water Treatment System | | |
| 2. ITEM NUMBER<br>CDRL WTS-PM-002 | 3. TITLE OR DESCRIPTION OF DATA<br>Meeting Agenda | 4. AUTHORITY (Data Item Number)<br>DID WTS-PM-002 |
| 5. CONTRACT REFERENCE<br>SOW: **Para.3.2.3.5.1 (pg. 17)**<br>DID: **App. A3.4 (pg. 57)** | 6. FREQUENCY<br>ASREQ | 7. REQUIRING OFFICE<br>DND EMT |

8. SUBMISSION SCHEDULE

**First Submission:** The Contractor must provide a draft Meeting Agenda for review no later than seven (7) calendar days prior to each meeting.

**Response Time:** Comments on the draft Meeting Agenda, and additions and deletions of discussion items, will be provided by Canada no later than five (5) calendar days after receipt of the soft copy submission.

**Subsequent Submission:** The Contractor must provide a revised Meeting Agenda, addressing Canada's comments, in soft copy one (1) calendar day prior to each meeting, and in hard copy at the meeting.

9. DISTRIBUTION and ADDRESSEES

| A. ADDRESSEE | B. COPIES | | | |
|---|---|---|---|---|
| | DRAFT | | FINAL | |
| | Hard Copy | Soft Copy | Hard Copy | Soft Copy |
| PSPC CA | 0 | 1 | 1 | 1 |
| DND TA | 0 | 1 | 1 | 1 |
| DND PA | 0 | 1 | 1 | 1 |
| | | | | |
| | | | | |
| | | | | |

## A2.5 CDRL – Meeting Minutes

| CONTRACT DATA REQUIREMENTS LIST | | |
|---|---|---|
| 1. SYSTEM / ITEM<br>Water Treatment System | | |
| 2. ITEM NUMBER<br>CDRL WTS-PM-003 | 3. TITLE OR DESCRIPTION OF DATA<br>Meeting Minutes | 4. AUTHORITY (Data Item Number)<br>DID WTS-PM-003 |
| 5. CONTRACT REFERENCE<br>SOW: **Para. 3.2.3.5.2 (pg. 17)**<br>DID: **App. A3.5 (pg. 59)** | 6. FREQUENCY<br>ASREQ | 7. REQUIRING OFFICE<br>DND PMO |

8. SUBMISSION SCHEDULE

**First Submission:** The Contractor must provide draft Meeting Minutes for review no later than seven (7) calendar days following each meeting.

**Response Time:** Comments on the draft Meeting Minutes will be provided by Canada no later than seven (7) calendar days after receipt of the soft copy submission.

**Subsequent Submission(s):** The Contractor must provide revised Meeting Minutes, addressing Canada's comments, for review and possible acceptance no later than seven (7) calendar days after receipt of Canada's comments.

**Response Time:** Comments or acceptance of the revised Meeting Minutes will be provided by Canada no later than seven (7) calendar days after receipt of the soft copy submission.

9. DISTRIBUTION and ADDRESSEES

| A. ADDRESSEE | B. COPIES | | | |
|---|---|---|---|---|
| | DRAFT | | FINAL | |
| | Hard Copy | Soft Copy | Hard Copy | Soft Copy |
| PSPC CA | 0 | 1 | 0 | 1 |
| DND TA | 0 | 1 | 0 | 1 |
| DND PA | 0 | 1 | 0 | 1 |
| | | | | |
| | | | | |
| | | | | |

## A2.6 CDRL – Technical Data Plan & List

| CONTRACT DATA REQUIREMENTS LIST | | |
|---|---|---|
| 1. SYSTEM / ITEM<br>Water Treatment System | | |
| 2. ITEM NUMBER<br>CDRL WTS-PM-004 | 3. TITLE OR DESCRIPTION OF DATA<br>Technical Data Plan & List (TDPL) | 4. AUTHORITY (Data Item Number)<br>DID WTS-PM-004 |
| 5. CONTRACT REFERENCE<br>SOW: **Para. 3.4.3.3 (pg. 19)**<br>DID: **App. A3.6 (pg. 60)** | 6. FREQUENCY<br>R/ASR & SEMIA | 7. REQUIRING OFFICE<br>DND EMT |

8. SUBMISSION SCHEDULE

**First Submission:** The Contractor must provide a draft TDPL (Section A & B) for review no later than 42 calendar days after the Kick-off Meeting.

**Response Time:** Comments on the draft TDPL (Section A & B) will be provided by Canada no later than 14 calendar days after receipt of the soft copy submission.

**Subsequent Submission(s):** The Contractor must provide a revised TDPL (Section A & B), addressing Canada's comments, for review and possible acceptance no later than 14 calendar days after the receipt of Canada's comments.

**Response Time:** Comments or acceptance of the revised TDPL (Section A & B) will be provided by Canada no later than seven (7) calendar days after receipt of the soft copy submission.

**Semi-Annual Submissions:** After acceptance by Canada, the Contractor must provide a TDPL (Section B – Technical Data List) for review and possible acceptance on a semi-annual basis throughout the contract.

The Contractor must provide a CD/DVD(s) of the up-to-date electronic versions of the Technical Data on the list (TDPL Section B), and all Software Updates, on a semi-annual basis throughout the contract.

9. DISTRIBUTION and ADDRESSEES

| A. ADDRESSEE | B. COPIES | | | |
|---|---|---|---|---|
| | DRAFT | | FINAL | |
| | Hard Copy | Soft Copy | Hard Copy | Soft Copy |
| PSPC CA | 0 | 1 | 0 | 1 |
| DND TA | 0 | 1 | 0 | 1 |
| | | | | |
| | | | | |
| | | | | |
| | | | | |

## A2.7 CDRL – Catalogue of Repairable and Consumable Items

| CONTRACT DATA REQUIREMENTS LIST | | |
|---|---|---|
| 1. SYSTEM / ITEM<br>Water Treatment System | | |
| 2. ITEM NUMBER<br>CDRL WTS-ILS-201 | 3. TITLE OR DESCRIPTION OF DATA<br>Catalogue of Repairable and Consumable Items (CRCI) | 4. AUTHORITY (Data Item Number)<br>DID WTS-ILS-201 |
| 5. CONTRACT REFERENCE<br>SOW: **Para. 3.6.3.1 (pg. 23)**<br>DID: **App. A3.7 (pg. 62)** | 6. FREQUENCY<br>R/ASR & SEMIA | 7. REQUIRING OFFICE<br>DND EMT |

8. SUBMISSION SCHEDULE

**First Submission:** The Contractor must provide a draft CRCI for review no later than 63 calendar days after the Kick-off Meeting.

**Response Time:** Comments on the draft CRCI will be provided by Canada no later than 14 calendar days after receipt of the soft copy submission.

**Subsequent Submission(s):** The Contractor must provide a revised CRCI, addressing Canada's comments, for review and possible acceptance no later than 14 calendar days after the receipt of Canada's comments.

**Response Time:** Comments or acceptance of the revised CRCI will be provided by Canada no later than seven (7) calendar days after receipt of the soft copy submission.

**Semi-Annual Submissions:** After acceptance by Canada, the Contractor must provide a CRCI for review and possible acceptance on a semi-annual basis throughout the contract.

9. DISTRIBUTION and ADDRESSEES

| A. ADDRESSEE | B. COPIES | | | |
|---|---|---|---|---|
| | DRAFT | | FINAL | |
| | Hard Copy | Soft Copy | Hard Copy | Soft Copy |
| DND TA | 0 | 1 | 0 | 1 |
| | | | | |
| | | | | |
| | | | | |
| | | | | |
| | | | | |

# A3.0 APPENDIX: DATA ITEM DESCRIPTION

## A3.1 DID Item List

| DID # | Title | CDRL # |
|---|---|---|
| WTS-PM-001 | Contract Status Report | WTS-PM-001 |
| WTS-PM-002 | Meeting Agenda | WTS-PM-002 |
| WTS-PM-003 | Meeting Minutes | WTS-PM-003 |
| WTS-PM-004 | Technical Data Plan & List | WTS-PM-004 |
| WTS-ILS-201 | Catalogue of Repairable and Consumable Items | WTS-ILS-201 |

## A3.2 DID Table Definitions

The following section defines the various blocks of information found on the Data Item Description (DID) forms:

**BLOCK 1 – TITLE**
The title of the data item for the DID.

**BLOCK 2 - IDENTIFICATION NUMBER**
The Data Item Description (DID) number, consisting of a sequential three-digit number and prefixed with an abbreviation code, to uniquely identify the DID. Note that the 001-099 series is reserved to Project Management (PM) DIDs, the 101-199 series is reserved to Systems Engineering (SE) DIDs and the 201-299 series is reserved to Integrated Logistics Support (ILS) DIDs. The abbreviation codes used for the prefix are:

"PM" for Project Management
"SE" for Systems Engineering
"ILS" for Integrated Logistics Support

**BLOCK 3 - DESCRIPTION**
Provides a general description of the data content requirements.

**BLOCK 4 – RELATED DOCUMENT(S)**
Provides a listing of the related documents and specifications associated with and required to produce this DID.

**BLOCK 5 - CONTRACT REFERENCE**
The specific paragraph numbers from the Contract Statement of Work and CDRL to assist in identifying the work effort associated with the data item.

**BLOCK 6 - PREPARATION INSTRUCTIONS**
Provides the preparation instructions for the content and format requirements for the DID.

## A3.3 DID – Contract Status Report

| DATA ITEM DESCRIPTION | |
|---|---|
| 1. TITLE<br>**Contract Status Report (CSR)** | 2. IDENTIFICATION NUMBER<br>DID WTS-PM-001 |
| 3. DESCRIPTION<br>The Contract Status Report (CSR) is the principal statement and explanation of the status of the contract at the end of each reporting period, and will summarise the Contractor's progress and activities in relation to the Project milestones, schedule, and contract data deliverables. | |
| 4. RELATED DOCUMENTS | 5. CONTRACT REFERENCE<br>SOW: **Para. 3.2.2.1 (pg. 16)**<br>CDRL: **App. A2.3 (pg. 46)** |

6. PREPARATION INSTRUCTIONS

6.1. **CONTENT**

6.1.1. **SECTION A: Contract Status**

6.1.1.1. The CSR must identify the date at which the CSR is valid, and the time period since the status date of the previous CSR (the 'reporting period').

6.1.1.2. The CSR must include the following information:

6.1.1.2.1. A summary of work activities (to be covered in detail in the Support Summary Report of the CSR) undertaken during the reporting period;

6.1.1.2.2. A summary of work activities expected to be undertaken in the next reporting period and all significant forthcoming events likely to influence the provision of Support or contract management activities, as applicable.

6.1.1.2.3. A list of correspondence that requires a response from the DND/PSPC, but for which no response has been received; and

6.1.1.2.4. A list of DND/PSPC correspondence to the Contractor for which a response is outstanding, and an estimate of the response date.

6.1.1.3. Contract Status Accounting Report (CSAR)

6.1.1.3.1. The Contract Status Accounting Report must include the following information:

6.1.1.3.1.1. The start date for the work activity undertaken during the reporting period.

6.1.1.3.1.2. A classification of the activity type such as Repair, TIES, FSR & Travel.

6.1.1.3.1.3. A description of the activity.

6.1.1.3.1.4. The estimated completion date of the activity.

6.1.1.3.1.5. The estimated cost of the activity.

6.1.1.3.1.6. The amount invoiced against the activity.

6.1.1.3.1.7. A summary of work activities expected to be undertaken in the next reporting period and all significant forthcoming events likely to influence the provision of Support or Contract management activities, as applicable.

## Contract Status Accounting Report (CSAR)

Information current as of: ***Date***
Reporting Period: ***1 April XXXX - 31 March XXXX***

| | | | | | | | |
|---|---|---|---|---|---|---|---|
| | | | | **Sub-Total** | 0 | 0 | |
| Item | Start Date | Activity Type | Description | Estimated Completion Date | Estimated Expense (Euro, CAD, USD, GBP) | Invoiced (Euro, CAD, USD, GBP) | Comments |
| 1 | | | | | | | |
| 2 | | | | | | | |
| 3 | | | | | | | |
| 4 | | | | | | | |
| 5 | | | | | | | |
| 6 | | | | | | | |
| 7 | | | | | | | |
| 8 | | | | | | | |
| 9 | | | | | | | |
| 10 | | | | | | | |
| 11 | | | | | | | |
| 12 | | | | | | | |
| 13 | | | | | | | |
| 14 | | | | | | | |

| Next reporting period activities | | | | Estimated Completion Date | Estimated Amount for next FY | | |
|---|---|---|---|---|---|---|---|
| 1 | | | | | | | |
| 2 | | | | | | | |

6.1.2. **SECTION B: Support Summary**

6.1.2.1. The CSR must include a Support Summary that describes the applicable support provided during the reporting period.

6.1.2.2. **Operating Support**

6.1.2.2.1. The Operating Support sub-section must include, for the reporting period and as required by the Contract, details of:

6.1.2.2.1.1. Operator and Technical Resource deployments, quantifying the level of effort related to the various activities;

6.1.2.2.1.2. Operational Spares Kit deployments, and resulting replenishments once returned;

6.1.2.3. **Engineering Support**

6.1.2.3.1. The Engineering Support sub-section must include, for the reporting period and as required by the Contract, details of:

6.1.2.3.1.1. Configuration Management changes;

6.1.2.3.1.2. Technical Data Management activities;

6.1.2.3.1.3. Software Updates (if applicable);

6.1.2.3.1.4. Technical Investigation and Engineering Support activities undertaken, including all significant outcomes or recommendations resulting from them;

6.1.2.3.1.5. Technical Problem Reports including the following information:

6.1.2.3.1.5.1. Category, priority, and title;

6.1.2.3.1.5.2. Date originated and originated by;

6.1.2.3.1.5.3. Assigned Contractor subject matter expert, and date assigned;

6.1.2.3.1.5.4. Technical problem corrective action plan;

6.1.2.3.1.5.5. Corrective action approval authority, if known;

6.1.2.3.1.5.6. Forecast completion date;

6.1.2.3.1.5.7. Reasons for delays;

6.1.2.3.1.5.8. Technical problem workarounds, if needed, and

6.1.2.3.1.5.9. Links to related technical reports.

6.1.2.3.2. The Support Summary must include a Configuration Management Equipment List (originally based on Appendix A1.0 List of Items to be Supported (page 37) to this SOW), showing the most current configuration of the WTS, its equipment and all associated items. The list must be provided in a table format including:

6.1.2.3.2.1. Serial numbers of the equipment installed in each instance of the WTS and also variances in configuration among instances of the system.

6.1.2.3.2.2. For each listed item, basic information must be recorded, including:

6.1.2.3.2.2.1. Item name;

6.1.2.3.2.2.2. Part number;

6.1.2.3.2.2.3. Model number (if applicable);

6.1.2.3.2.2.4. Original equipment manufacturer;

6.1.2.3.2.2.5. Commercial and Government Entity (CAGE) Code, and

6.1.2.3.2.2.6. NATO Stock Number (NSN), if available.

6.1.2.3.2.3. Software items must be identified by name, software identification number and version number.

6.1.2.4. **Maintenance Support**

6.1.2.4.1. The Maintenance Support sub-section must include, for the reporting period and as required by the Contract, details of:

6.1.2.4.1.1. Details of WTS and Operational Spares Kit that had the detailed inspection and maintenance during the reporting period, and what repairs or replacements were done. Include schedule for completing remaining detailed inspection and maintenance.

6.1.2.4.1.2. The number and type of Maintenance activities undertaken and all significant delays or issues encountered;

6.1.2.4.1.3. Maintenance Report, summarizing:

6.1.2.4.1.3.1. The number and nature of the defects or unexpected failure modes;

6.1.2.4.1.3.2. For each item undergoing R&O, indicate what was found wrong with the item;

6.1.2.4.1.3.3. In the instances when the Contractor can find nothing wrong with an item sent for repair, this must be indicated so the root cause can be investigated.

6.1.2.4.1.3.4. The measures that can be (or already has been) undertaken to avoid future defects or failure modes of a similar nature, and

6.1.2.4.1.3.5. Those defects and unexpected failure modes remaining without resolution or pending DND EMT action.

6.1.2.4.1.4. Each Repairable Item, by item name and quantity that has been identified as beyond physical repair or beyond economic repair, must be listed.

6.1.2.5. **Supply Support**

6.1.2.5.1. The Supply Support sub-section must include, for the reporting period and as required by the Contract, details of:

6.1.2.5.1.1. All issues or concerns with Inventory Management and stock item levels, such as stock item levels being low and needing replenishment;

6.1.2.5.1.2. Fleet Support Spares replenishments;

6.1.2.5.1.3. Obsolescence Management activities;

6.1.2.5.1.4. The numbers of stock movements, and cost of procurement, under:

6.1.2.5.1.4.1. Provision of Material (Operational Spares Kits);

6.1.2.5.1.4.2. Provision of Material (Fleet Support Spares);

6.1.2.5.1.4.3. Provision of Material (DND request), and

6.1.2.5.1.4.4. Disposal of DND-owned Stock;

6.1.2.5.1.5. All significant problems either encountered or envisaged with obtaining particular stock items, and

6.1.2.5.1.6. Disposals of DND-owned Stock.

6.1.2.6. **Training Support**

6.1.2.6.1. The Training Support sub-section must include, for the reporting period and as required by the Contract, details of:

6.1.2.6.1.1. The name and quantity of each Training Session conducted;

6.1.2.6.1.2. Activities to review and update the Training Package; and

6.1.2.6.1.3. Recommended changes for the training program, materials and equipment.

6.1.2.7. **Other Observations and Opportunities**

6.1.2.7.1. The Support Summary must include other details of other events, or on-going activities that the Contractor believes to be significant to the performance of the support services during the reporting period.

6.1.2.7.2. The Support Summary must include a description of opportunities identified by the Contractor that could improve the effectiveness and efficiency of the support provided.

6.2. **SOFT COPY FORMAT**

6.2.1. The CSR must be submitted as a PDF file type.

6.2.2. The CSR PDF must be submitted via email (submission size not to exceed 7MB) as follows:

6.2.2.1. To Field: As per the related CDRL section 9.A. Addressee, as identified in the contract.

6.2.2.2. Subject Field: WTS-PM-001 – CSR – [Rev #] – [Date of Issue]

## A3.4 DID – Meeting Agenda

| DATA ITEM DESCRIPTION | |
|---|---|
| 1. TITLE<br>**Meeting Agenda** | 2. IDENTIFICATION NUMBER<br>DID WTS-PM-002 |
| 3. DESCRIPTION<br>The Meeting Agenda contains the venue information and identifies the discussion items to be covered at meetings. | |
| 4. RELATED DOCUMENTS | 5. CONTRACT REFERENCE<br>SOW: **Para. 3.2.3.5.1 (pg. 17)**<br>CDRL: **App. A2.4 (pg. 47)** |

6. PREPARATION INSTRUCTIONS

6.1. **CONTENT**

6.1.1. The Meeting Agenda must set forth the venue, identify all requirements and list the discussion items to be covered at the meeting.

6.1.2. Venue. The Meeting Agenda must address the venue as follows:

6.1.2.1. Meeting Identification Number;

6.1.2.2. Purpose;

6.1.2.3. Date, time and location; and

6.1.2.4. Attendees.

6.1.3. Discussion items. The Meeting Agenda must address the discussion items through the following sections:

6.1.3.1. Opening Remarks;

6.1.3.2. Agenda Review;

6.1.3.3. Review of Previous Minutes;

6.1.3.4. Opened Discussion Items;

6.1.3.5. New Discussion Items;

6.1.3.6. Review of Action Items;

6.1.3.7. Next Venue; and

6.1.3.8. Closing Remarks.

6.2. **HARD COPY FORMAT**

6.2.1. The Meeting Agenda must be printed on paper with these characteristics:

6.2.1.1. Weight of no less than 90 gsm;

6.2.1.2. Brightness of no less than 96 ISO brightness;

6.3. **SOFT COPY FORMAT**

6.3.1. The Meeting Agenda must be submitted as a PDF file type.

6.3.2. The Meeting Agenda PDF must be submitted via email (submission size not to exceed 7MB) as follows:

6.3.2.1. To Field: As per the related CDRL section 9.A. Addressee, as identified in the contract.

6.3.2.2. Subject Field: WTS-PM-002 – Meeting Agenda – [Rev #] – [Date of Issue]

## A3.5 DID – Meeting Minutes

| DATA ITEM DESCRIPTION | |
|---|---|
| 1. TITLE<br>**Meeting Minutes** | 2. IDENTIFICATION NUMBER<br>DID WTS-PM-003 |
| 3. DESCRIPTION<br>The Meeting Minutes contains the detailed records of proceedings, discussions, decisions and action items from meetings. | |
| 4. RELATED DOCUMENTS | 5. CONTRACT REFERENCE<br>SOW: **Para. 3.2.3.5.2 (pg. 17)**<br>CDRL: **App. A2.5 (pg. 48)** |

6. PREPARATION INSTRUCTIONS

6.1. **CONTENT**

6.1.1. The Meeting Minutes must contain the detailed records of proceedings, discussions, decisions and action items from the meeting and be presented through the following sections:

6.1.1.1. General – consisting of meeting identification number, purpose, date, time and location;

6.1.1.2. Attendees, consisting of the organization each person represents, and the identification of the Chairperson(s);

6.1.1.3. Opening Remarks;

6.1.1.4. **Action Item Report** - used to monitor issues, assign responsibility, direct action and track status, history, and progress, and must consisting of:

6.1.1.4.1. Item #; date initiated; required action; assigned actionee; target completion date; cross-reference to all related action items.

6.1.1.4.2. Action Item Report must be **updated** with each meeting and must consisting of:

6.1.1.4.2.1. Action Item current status and the actual date completed;

6.1.1.5. Next Venue;

6.1.1.6. Closing Remarks;

6.2. **SOFT COPY FORMAT**

6.2.1. The Meeting Minutes must be submitted as a PDF file type.

6.2.2. The Meeting Minutes PDF must be submitted via email (submission size not to exceed 7MB) as follows:

6.2.2.1. To Field: As per the related CDRL section 9.A. Addressee, as identified in the contract.

6.2.2.2. Subject Field: WTS-PM-003 – Meeting Minutes – [Rev #] – [Date of Issue]

## A3.6 DID – Technical Data Plan & List

| DATA ITEM DESCRIPTION | |
|---|---|
| 1. TITLE<br>**Technical Data Plan & List** | 2. IDENTIFICATION NUMBER<br>DID WTS-PM-004 |
| 3. DESCRIPTION<br>The Technical Data Plan & List (TDPL) describes the Contractor's strategy, plans, methodology, and processes for meeting the Contract requirements for the identification, control, update, validation and support of Technical Data.<br>The TDPL also identifies and defines the Contractor's and sub-Contractor's Technical Data associated with the Contract. The configuration of the TDPL is managed to keep track of changes to the list of Technical Data throughout the period of the Contract. | |
| 4. RELATED DOCUMENTS | 5. CONTRACT REFERENCE<br>SOW: **Para. 3.4.3.3 (pg. 19)**<br>CDRL: **App. A2.6 (pg. 49)** |

6. PREPARATION INSTRUCTIONS

6.1. **CONTENT**

6.1.1. **Section A – Technical Data Organisation & Management**

6.1.1.1. **Technical Data Organisation**

6.1.1.1.1. The TDPL must describe the Contractor's organisational arrangements for meeting the Technical Data requirements of the Contract, including:

6.1.1.1.1.1. The Contractor's Technical Data manager and the organisational units primarily involved in managing Technical Data; and

6.1.1.1.1.2. The Contractor's and approved sub-Contractor's management positions with responsibilities for Technical Data (eg, configuration managers, managers of technical information libraries, and quality managers).

6.1.1.2. **Technical Data Management**

6.1.1.2.1. The TDPL must describe the Contractor's strategy, methodology, and processes for managing Technical Data, including:

6.1.1.2.1.1. Distribution of Technical Data and distribution of updates to Technical Data, within the Contractor's and sub-Contractors' organisations and, where applicable, DND units;

6.1.1.2.1.2. Configuration Control of Technical Data, including:

6.1.1.2.1.2.1. Version control;

6.1.1.2.1.2.2. Matching Technical Data, including publications, with equipment configurations where multiple configurations exist, and

6.1.1.2.1.2.3. Storage, backup and recovery of electronic Technical Data.

6.1.1.2.2. The TDPL must the Contractor's processes for controlling and enabling access to Technical Data that is subject to restrictions or caveats associated with security, export licences, Technical Assistance Agreements, escrow arrangements, or IP rights.

6.1.1.2.3. The TDPL must describe the Contractor's expectations of the DND with respect to the management of Technical Data.

6.1.1.3. **Technical Data Development**

6.1.1.3.1. The TDPL must describe:

6.1.1.3.1.1. The Contractor's typical activities associated with the identification, design, development, review, and delivery of new Technical Data and updates to existing Technical Data;

6.1.1.3.1.2. The standards and specifications to be applied for the development of new Technical Data and for updates to existing Technical Data;

6.1.2. **Section B – Technical Data List (TDL)**

6.1.2.1. The TDL must list all of the Technical Data:

6.1.2.1.1. Used by the Contractor and sub-Contractors in the provision of the support services; and

6.1.2.1.2. Generated by the Contractor and approved sub-Contractors as an outcome of providing the support services.

6.1.2.2. The TDL must list software separately from the other types of Technical Data.

6.1.2.3. The TDL must include the following information for each Item of Technical Data:

6.1.2.3.1. The name or title of the Technical Data;

6.1.2.3.2. The Item's reference number or document number for the Technical Data, including revision and amendment status;

6.1.2.3.3. A brief description of the Technical Data, including the purpose of the Technical Data;

6.1.2.3.4. The developmental status of the Technical Data (eg, existing and not to be modified, existing and to be modified, and new);

6.1.2.3.5. The source of the Technical Data (eg, name of sub-Contractor);

6.1.2.3.6. If not electronic Technical Data, delivery information, including location (to include the details of the escrow agent, if applicable, and the support organisations), quantity, and delivery date;

6.1.2.3.7. Security classification;

6.2. **SOFT COPY FORMAT**

6.2.1. The TDPL must be submitted as a PDF file type.

6.2.2. **Soft Copy format submission size below 7MB** – The TDPL PDF may be submitted via email as follows:

6.2.2.1. To Field: As per the related CDRL section 9.A. Addressee, as identified in the contract.

6.2.2.2. Subject Field: WTS-PM-004 – TDPL – [Rev #] – [Date of Issue]

6.2.3. **Soft Copy format submission size at or above 7MB** – The TDPL PDF must be submitted on CD or DVD media and be labelled as follows:

6.2.3.1. Water Treatment System

6.2.3.2. TDPL;

6.2.3.3. WTS-PM-004;

6.2.3.4. The Revision number, and

6.2.3.5. The date of issue.

## A3.7 DID – Catalogue of Repairable and Consumable Items

| DATA ITEM DESCRIPTION | |
|---|---|
| 1. TITLE<br>**Catalogue of Repairable and Consumable Items** | 2. IDENTIFICATION NUMBER<br>DID WTS-ILS-201 |
| 3. DESCRIPTION<br>The Catalogue of Repairable and Consumable Items (CRCI) will be used by the DND EMT to potentially order additional Fleet Support Spares and Operational Spares Kits, and as such, will also include the necessary NATO codification cataloguing information to allow receipt at depot and movement within the world.<br>The CRCI will provide the DND EMT with the ability to continue to support deployed equipment beyond the time period of the Operational Spares Kits, should this become necessary. | |
| 4. RELATED DOCUMENTS<br>**D-01-100-214/SF-000** *Specification for Preparation of Provisioning Documentation for Canadian Forces Equipment*<br>**D-01-400-001/SG-000** *Standard – Engineering Drawing Practices for Class 1 Drawings and Technical Data List* | 5. CONTRACT REFERENCE<br>SOW: **Para. 3.6.3.1 (pg. 23)**<br>CDRL: **App. A2.7 (pg. 50)** |

6. PREPARATION INSTRUCTIONS

6.1. **CONTENT**

6.1.1. The CRCI must include:

6.1.1.1. Basic ordering data including item identification, prices, and lead times for Fleet Support Spares and Operational Spares Kits.

6.1.1.2. Information regarding the content of the Operational Spares Kits, needed by the DRMIS and DND Transportation, such as: items included, weight and dimensions, and identification of all hazardous material or dangerous goods.

6.1.1.3. Supplementary Provisioning Technical Documentation (SPTD), for each item of the Fleet Support Spares and Operational Spares Kits, and must include the technical data required for DND to classify and fully describe the item within the NATO codification system, allowing for item identification and cataloguing purposes;

6.1.1.3.1. Key elements of good SPTD:

6.1.1.3.1.1. Displays the true manufacturer company logo & address (or NCAGE), and MRN (see D-01-100-214/SF-000 for definitions.).

6.1.1.3.1.2. Lists characteristic data of the item:

6.1.1.3.1.2.1. Configuration;

6.1.1.3.1.2.2. Physical characteristics, such as dimensions, tolerances, material, mandatory processes, surface finish, and protective coatings;

6.1.1.3.1.2.3. Electrical Characteristics;

6.1.1.3.1.2.4. Performance data;

6.1.1.3.1.2.5. Special features which contribute to the uniqueness of the item, especially for common items modified to a particular standard of performance.

6.1.1.3.1.3. Clearly shows the item in question.

6.1.1.3.1.4. Show where the item fits in the next higher assembly (if practical)

6.2. **GENERAL FORMAT**

6.2.1. The SPTD must be prepared as black and white line drawing(s) or with good quality photograph(s) within a Technical Datasheet.

6.2.1.1. If prepared as a drawing, the SPTD must follow the drawing format of D-01-400-001/SG-000 section 7.4, with attached parts lists (for assemblies), so that DND can ensure that the Provisioning Documentation reflects the current and complete configuration of the equipment being produced.

6.3. **SOFT COPY FORMAT**

6.3.1. The CRCI must be submitted as a PDF file type.

6.3.2. The SPTD must be submitted in PDF file type, with filenames in the following format: (MRN)_(NCAGE)_(item name).pdf.

6.3.3. **Soft Copy format submission size below 7MB** – The CRCI & SPTD PDFs may be submitted via email as follows:

6.3.3.1. To Field: As per the related CDRL section 9.A. Addressee, as identified in the contract.

6.3.3.2. Subject Field: WTS-ILS-201 – CRCI – [Rev #] – [Date of Issue]

6.3.4. **Soft Copy format submission size at or above 7MB** - The CRCI & SPTD PDFs must be submitted on CD or DVD media and be labelled as follows:

6.3.4.1. Water Treatment System

6.3.4.2. CRCI;

6.3.4.3. WTS-ILS-201;

6.3.4.4. The Revision number, and

6.3.4.5. The date of issue.

# A4.0 APPENDIX: MERCURY CONTAINING PRODUCTS/COMPOUNDS

## A4.1 General

A4.1.1 Mercury and its compounds are listed as a toxic substance in Schedule 1 to the Canadian Environmental Protection Act, 1999. Consequently, the Contractor must comply with the following requirements:

A4.1.1.1 The Contractor must not replace an existing component or add a new equipment component containing mercury, when a mercury-free alternative exists.

A4.1.1.2 For each case where the products must contain mercury or its compounds, the Contractor must submit a statement that it is not technically feasible to use a mercury-free product in its place, and explain why;

A4.1.1.3 Products containing mercury or its compounds must comply with mercury content limits specified in all relevant standard;

A4.1.1.4 Where the products contain mercury or its compounds, in all shapes or forms, or where its operation or maintenance requires the use of mercury or its compounds, the Contractor must provide in tabular format, to the Technical Authority (TA), the following for each occurrence of mercury or its compounds:

A4.1.1.4.1 Identification of the Products as containing mercury or its compounds;

A4.1.1.4.2 NATO Stock Number of the Products, if available;

A4.1.1.4.3 Description of the Products:

A4.1.1.4.3.1 Manufacturer of the item or part containing mercury or its compounds;

A4.1.1.4.3.2 Manufacturer part number of the item or part containing mercury or its compounds;

A4.1.1.4.3.3 National Supply Code for Manufacturers (NSCM) / Commercial and Government Entity (CAGE) Code of the item or part containing mercury or its compounds;

A4.1.1.4.3.4 Description of the mercury or its compounds of the item or part containing mercury or its compounds;

A4.1.1.4.3.5 The form of mercury or its compounds (e.g. liquid, vapour, amalgam, metal halide); and

A4.1.1.4.3.6 The location of the mercury or its compounds on or in the item or part containing mercury or its compounds;

A4.1.1.4.4 Material Safety Data Sheet, where possible;

A4.1.1.5 The Contractor is responsible to ensure that products containing mercury or its compounds are labeled in a readily visible location identifying that the item contains mercury or its compounds. The label must be bilingual and in accordance with the following standard:

A4.1.1.5.1 The information must be in characters that are at least 3 mm in height, legible and indelible and that are impressed, embossed or in a colour that contrasts with the label's background or the colour of the product as applicable.

A4.1.1.5.2 The label must be enclosed by a borderline and easily distinguishable from other graphic material on the product or its package.

A4.1.1.5.3 The label must be bilingual and must include following contents:

A4.1.1.5.3.1 A statement "CAUTION/MISE EN GARDE" in characters that are at least 4 mm in height;

A4.1.1.5.3.2 A statement that the product contains mercury and the content of mercury in the product in milligrams;

A4.1.1.5.3.3 Information on the action to be taken in case of accidental breakage and a description of the risks associated with the use of the product, the address of a website that contains the information, or contact information for a person who can provide that information;

A4.1.1.5.3.4 Information on the options available for proper disposal and recycling in accordance with the laws of jurisdiction where the disposal or recycling to take place, the address of a website that contains the information, or contact information for a person who can provide that information;

A4.1.1.5.3.5 A warning that the product should be managed in accordance with the applicable disposal or recycling laws;

A4.1.1.5.3.6 The "Hg" symbol encircled by a line on a readily visible location on the product where the characters are at least 3 mm in height which are impressed, embossed or in a colour that contrasts with the label's background or the colour of the product as applicable;

A4.1.1.5.3.7 If the product is not large enough to accommodate the information, the information must be:

4.1.1.5.3.7.1 In a readily visible location on the package in which the product is sold or offered for sale; or

4.1.1.5.3.7.2 In a notice attached to the product or in a manual that accompanies the product, if there is no package, or if the package is not large enough to accommodate the information;

4.1.1.5.3.7.3 In both official languages;

A4.1.1.6 Technical documentation provided by the Contractor must contain:

A4.1.1.6.1 Product warning to provide information on the mercury content and other relevant information. The technical document must also include information on part numbers containing mercury, location, type of mercury, manufacturer's information, mercury content, and MSDS information (refer to para. A4.1.1.4).

A4.1.1.6.2 A written work procedure for processes involving the safe handling of mercury-containing equipment, components and materials, must be included. It must identify procedures for mercury spills cleanups and disposal procedures. The work procedure must identify proper Personal Protective Equipment in the case of a spill. A warning indicating that the product should be disposed of or recycled in accordance with the applicable laws must also be included.

# STATEMENT OF WORK

# FOR THE

# WATER TANK TRAILER

NOTICE

This documentation has been reviewed by the technical authority and does not contain controlled goods. Disclosure notices and handling instructions originally received with the document must continue to apply.

AVIS

Cette documentation a été révisée par l'autorité technique et ne contient pas de marchandises contrôlées. Les avis de divulgation et les instructions de manutention reçues originalement doivent continuer de s'appliquer.

## TABLE OF CONTENTS

# 1.0 SCOPE

## 1.1 Purpose

1.1.1 The purpose of this Statement of Work (SOW) is to define the work requirements for the contracting of a Water Tank Trailer (WTT). The WTT will be a replacement from the current in-service Water Buffalo. The contract is for the production and delivery of 250 WTT. The WTT will have an insulated, heated water tank with increased capacity of 3000L, and will be compatible with the new MSVS MilCOTS and SMP prime movers.

## 1.2 Background

1.2.1 The current, in-service, 1990 era, Water Buffalo Trailer has exceeded its life expectancy and is urgently in need of replacement.

1.2.2 The WTT will provide a four (4) seasons, mobile, water storage and delivery system for potable water.

## 1.3 Acronyms and Abbreviations

| | |
|---|---|
| AECTP | Allied Environmental Conditions Testing Publication |
| ASTM | American Society for Testing and Materials |
| CAGE | Commercial and Government Entity |
| CARC | Chemical Agent Resistant Coating |
| CDR | Critical Design Review |
| CDRL | Contract Data Requirements List |
| CAF | Canadian Armed Forces |
| CFB | Canadian Forces Base |
| CFTO | Canadian Forces Technical Order |
| CSA | Canadian Standards Association |
| DID | Data Item Description |
| DMC | Demilitarization Code |
| DND | Department of National Defence |
| DPA | Defence Product Act |
| ECL | Export Control List |
| ECCN | Export Control Classification Number |
| EHS | Environmental Health and Safety |
| gsm | Grams per Square Meter |
| GTW | Gross Trailer Weight |
| IAW | In Accordance With |
| ILS | Integrated Logistics Support |
| ILSM | Integrated Logistics Support Manager |

| | |
|---|---|
| IPC | Initial Provisioning Conference |
| IPGC | Initial Provisioning Guidance Conference |
| IPM | Illustrated Parts Manual |
| ISO | International Standards Organization |
| ITAR | International Traffic in Arms Regulations |
| MIL-STD | United States Department of Defense Military Standard |
| MSDS | Material Safety Data Sheet |
| MSVS | Medium Support Vehicle System |
| NATO | North Atlantic Treaty Organization |
| NCAGE | NATO Commercial and Government Entity |
| NEMA | National Electrical Manufacturers Association |
| NDID | National Defence Index of Documentation |
| NSF | National Sanitation Foundation |
| NSN | NATO Stock Number |
| OEM | Original Equipment Manufacturer |
| OQRC | Operator Quick Reference Card |
| PDF | Portable Document Format |
| PMP | Project Management Plan |
| PPB | Provisioning Parts Breakdown |
| PSPC | Public Service and Procurement Canada |
| R&O | Repair & Overhaul |
| SME | Subject Matter Expert |
| SMP | Standard Military Pattern |
| SOW | Statement of Work |
| SPTD | Supplementary Provisioning Technical Documentation |
| STANAG | NATO Standardization Agreement |
| STTE | Special Tools and Test Equipment |
| TA | Technical Authority |
| TLAD | Top Level Assembly Drawing |
| TMDE | Test, Measurement and Diagnostic Equipment |
| USML | United States Munitions List |
| AT | Acceptance test |
| WTT | Water Tank Trailer |

## 2.0 APPLICABLE DOCUMENTS

### 2.1 References

2.1.1 Whereas mentioned, the following Standards must be used for the preparation of deliverables to the extent specified in this SOW:

**GOVERNMENT FURNISHED INFORMATION**

| REFERENCE NUMBER | PROMULGATION DATE | REFERENCE TITLE |
|---|---|---|
| C-01-100-100/AG-008 | 2017-11-02 | WRITER'S GUIDE FOR TECHNICAL DOCUMENTATION |
| C-02-007-000/AG-001 | 2016-01-01 | CONTROLLED TECHNOLOGY ACCES AND TRANSFER (CTAT) MANUAL |
| C-30-K77-000/MB-000 | | OPERATOR MANUAL MSVS SMP |
| C-30-K86-000/TE-000 | | DATA SUMMARY/SPEC SHEET MSVS SMP |
| C-32-F42-000/MA-000 | 2009-11-30 | DATA SUMMARY TRUCK, 8 TONNES, 6X6, CARGO, MSVS MILCOTS, CANADIAN SERIE |
| D-01-100-204/SF-000 | 2000-10-31 | SPECIFICATION - PREPARATION OF PREVENTIVE MAINTENANCE INSTRUCTIONS |
| D-01-100-205/SF-000 | 2000-10-31 | SPECIFICATION - PREPARATION OF CORRECTIVE MAINTENANCE INSTRUCTION |
| D-01-100-207/SF-002 | 1996-07-12 | SPECIFICATION - PREPARATION OF INTERIM ILLUSTRATED PARTS MANUALS FOR LAND EQUIPMENTS |
| D-01-100-211/SF-000 | 1991-06-01 | SPECIFICATION – PRESERVATION, STORAGE AND HANDLING INSTRUCTION |
| D-01-100-214/SF-000 | 2002-05-01 | SPECIFICATION FOR PREPARATION OF PROVISIONING DOCUMENTATION FOR CANADIAN FORCES EQUIPMENT |
| D-01-400-001/SG-000 | 2018-01-31 | STANDARD - ENGINEERING DRAWING PRACTICES |
| D-01-400-002/SF-000 | 2011-03-01 | SPECIFICATION FOR LEVELS OF ENGINEERING DRAWINGS |
| D-02-002-001/SG-001 | 2003-04-01 | STANDARD – IDENTIFICATION MARKING OF CANADIAN MILITARY PROPERTY |
| D-LM-008-001/SF-001 | 1983-02-03 | METHODS OF PACKAGING |
| D-LM-008-002/SF-001 | 1991-08-01 | SPECIFICATION FOR MARKING FOR STORAGE AND SHIPMENT |
| D-LM-008-011/SF-001 | 1988-11-10 | PREPARATION AND USE OF PACKAGING REQUIREMENTS CODES |
| AECTP 400 | JANUARY 2006 | ALLIED ENVIRONMENTAL CONDITIONS AND TEST PUBLICATIONS |

**COMMERCIALLY AVAILABLE**

| REFERENCE NUMBER | PROMULGATION DATE | REFERENCE TITLE |
|---|---|---|
| ASTM A240 | | STANDARD SPECIFICATION FOR CHROMIUM AND CHROMIUM-NICKEL STAINLESS STEEL PLATE, SHEET, AND STRIP FOR PRESSURE VESSELS AND FOR GENERAL APPLICATIONS |
| ASTM A270 | | STANDARD SPECIFICATION FOR SEAMLESS AND WELDED AUSTENITIC AND FERRITIC/AUSTENITIC STAINLESS STEEL SANITARY TUBING |
| ASTM A380 | | STANDARD PRACTICE FOR CLEANING, DESCALING, AND PASSIVATION OF STAINLESS STEEL PARTS, EQUIPMENT, AND SYSTEMS |
| ASTM F883-04 | | STANDARD PERFORMANCE SPECIFICATION FOR PADLOCKS |
| ASTM A967 | | STANDARD SPECIFICATION FOR CHEMICAL PASSIVATION TREATMENTS FOR STAINLESS STEEL PARTS |
| ASTM D975-15A | 2015-06-01 | STANDARD SPECIFICATION FOR DIESEL FUEL OILS |
| CANADA LABOUR CODE | | |
| PART 2 | 2017-12-12 | OCCUPATIONAL HEALTH AND SAFETY |
| CSA C22.1, ED.23 | 2015 | CANADIAN ELECTRICAL CODE, PART I ELECTRICAL INSTALLATIONS |
| CSA C22.2, ED.23 | 2015 | CANADIAN ELECTRICAL CODE, PART II GENERAL REQUIREMENTS |
| MIL-PRF-24667 C | 2008-05-22 | COATING SYSTEM, NON SKID |
| MIL-STD-209K | 2005-02-22 | DEPARTMENT OF DEFENSE INTERFACE STANDARD FOR LIFTING AND TIEDOWN PROVISIONS |
| MIL-STD-810H | 2019-01-31 | DEPARTMENT OF DEFENSE TEST METHOD STANDARD |
| MIL-STD-1366E | 2006-10-31 | INTERFACE STANDARD FOR TRANSPORTABILITY CRITERIA |
| NEMA IEC 60529 | N/A | DEGREES OF PROTECTION PROVIDED BY ENCLOSURES - IP CODE |
| NSF - 61 | 2016 | DRINKING WATER SYSTEM COMPONENTS - HEALTH EFFECTS |
| R.S.C., 1985, C. H-3 | 1985 | HAZARDOUS PRODUCTS ACT |
| SAE J686 | 2012-07-23 | MOTOR VEHICLE LICENSE PLATES |
| SAE J1452 | 2011-06-16 | TRAILER GRADE PARKING PERFORMANCE PROCEDURE |
| SOR/99-7 | 1998 | OZONE-DEPLETING SUBSTANCES REGULATIONS, 1998 |

| | | |
|---|---|---|
| STANAG 2601 ED.4 | 2017-09-14 | STANDARDIZATION OF ELECTRICAL SYSTEMS IN TACTICAL LAND VEHICLES |
| STANAG 2604 ED.3 | 1986-02-12 | BREAKING SYSTEMS BETWEEN TRACTOR, DRAW-BAR TRAILER AND SEMI-TRAILER EQUIPMENT COMBINATIONS FOR MILITARY USE |
| STANAG 2805 ED.5 | 1997-10-07 | FORDING AND FLOTATION REQUIREMENTS FOR COMBAT AND SUPPORT GROUND VEHICLES |
| STANAG 4050 ED.2 | 1991-06-19 | SYMBOLS DESIGNATING FUNCTION OF CONTROLS IN MILITARY VEHICLES |
| STANAG 4101 ED.2 | 2000-02-21 | TOWING ATTACHMENTS |
| STANAG 4478 ED.1 | 2004-10-08 | EMERGENCY TOWING AND RECOVERY FACILITIES FOR TACTICAL LAND VEHICLES |
| STANAG 4381 ED.1 | 1994-07-08 | BLACKOUT LIGHTING SYSTEMS FOR TACTICAL LAND VEHICLES |
| TRANSPORT CANADA | 2018-07-11 | MOTOR VEHICLE SAFETY REGULATIONS |
| | 2017-06-15 | GEOMETRIC DESIGN GUIDE FOR CANADIAN ROADS, CHAPTER 3 |

## 2.2 Order of Precedence

2.2.1 In the event of conflict between the content in this SOW and the referenced documents, the content of this SOW will take precedence.

# 3.0 PROJECT MANAGEMENT

## 3.1 Project Management Program

3.1.1 The Contractor must hold the internationally recognized Quality Management System (QMS) standard, ISO 9001.

3.1.2 The Contractor must designate a suitably qualified Project Manager with the responsibilities to coordinate, execute, and manage the Contractor's project management activities for the Contract. The Contractor's Project Manager must have the total responsibility for all works required under the Contract.

3.1.3 The Contractor's Project Manager must be the primary point of contact between the Contractor and the DND Technical Authority and the PSPC Contracting Authority for all issues related to the Contract.

## 3.2 Project Management Plan

3.2.1 The Contractor must provide a **Project Management Plan** (PMP) IAW CDRL WTT-PM-001 at Appendix A3.3 (page 39) to ANNEX D and its associated DID WTT-PM-001 at Appendix A4.3 (page 64) to ANNEX D.

## 3.3 Project Meetings

3.3.1 Meeting Organization and Coordination

3.3.1.1 The Contractor's Project Manager must be present at the Kick-off Meeting, and all other meetings when requested by Canada. If the Project Manager does not have final approval authority for decision making and changes, then the person responsible must also be present at these meetings.

3.3.2 Kick-off Meeting

3.3.2.1 The Contractor must hold and chair a Kick-off Meeting (at the Contractor's facility) no later than twenty-eight (28) calendar days after contract award to review and secure a common understanding of the requirements expressed in the following:

3.3.2.1.1 The Contract;

3.3.2.1.2 The SOW;

3.3.2.1.3 General overview of the project, risks, schedule and communication channels to follow;

3.3.2.1.4 Other contractual and programmatic issues associated with the project as agreed between the TA, CA and the Contractor.

3.3.2.2 At the Kick-off Meeting, the contractor must provide a Top Level Assembly Drawings IAW CDRL WTT-SE-102 at Appendix A3.7 (page 43) and its associated DID WTT-SE-102 at Appendix A4.7 (page 70) to this ANNEX D.

3.3.2.3 Contractor must provide Meeting Documentation as per requirements found at ANNEX D para. 3.3.6.

3.3.3 Integrated Logistics Support (ILS) Meeting

3.3.3.1 The Contractor must hold and chair an ILS Meeting following the closure of the Kick-Off Meeting (see ANNEX D, para 3.3.2), in order to:

3.3.3.1.1 Review and secure a common understanding of the requirements expressed in the ILS CDRLs and DIDs, DND CFTOs and specifications;

3.3.3.1.2 Discuss possible sparing strategies and concepts, Lowest Replaceable Units (LRUs), lines of maintenance, and the Maintenance Concept

3.3.3.2 Contractor must provide Meeting Documentation as per requirements found at ANNEX D para. 3.3.6.

3.3.4 Critical Design Review

3.3.4.1 The Contractor must hold a Critical Design Review (CDR) meeting within 91 days of the Kick-Off Meeting. The purpose of the CDR meeting is to review the following:

3.3.4.1.1 Drawings, images and specifics of design to ensure that the detailed design of the WTT addresses the technical requirements of the SOW, (payload Centre of Gravity)

3.3.4.1.2 Ensure that the detailed design of the WTT is adequate to proceed to fabrication, system integration and testing. A review of the Draft FATP can be conducted at this time as well.

3.3.4.1.3 Assess risk areas on a technical, cost and schedule basis.

3.3.4.1.4 For the CDR, the Meeting Agenda must contain a Criteria Review Table listing the SOW technical requirements that the contractor will demonstrate have been met.

3.3.5 Other meetings

3.3.5.1 The Contractor and the TA may schedule informal reviews, such as teleconferences, video conferences, briefings and technical interchange meetings, as required to help achieve the requirements of the Contract.

3.3.5.2 Contractor must provide Meeting Documentation as per requirements found at ANNEX D para. 3.3.6.

3.3.6 Meeting Documentation

3.3.6.1 The Contractor must prepare and deliver a meeting agenda for all formal meetings and conferences, and prepare and deliver the meeting minutes afterwards.

3.3.6.1.1 The Contractor must provide the **Meeting Agenda**(s) IAW CDRL WTT-PM-002 at Appendix A3.4 (page 40) to ANNEX D and its associated DID WTT-PM-002 at Appendix A4.4 (page 66) to ANNEX D.

3.3.6.1.2 The Contractor must record, prepare, and provide the **Meeting Minutes** of each meeting IAW CDRL WTT-PM-003 at Appendix A3.5 (page 41) to ANNEX D and its associated DID WTT-PM-003 at Appendix A4.5 (page 67) to ANNEX D.

3.3.6.2 No change in the interpretation of the SOW, Performance Specification, cost, and schedule, as defined in the contract, may be authorized by the minutes of a meeting. Such action will require formal contract amendment by the CA.

## 4.0 FIRST ARTICLE ACCEPTANCE

4.1.1 The purpose of the First Article Acceptance process is to ensure that the contractor follows a detailed agreed upon path that demonstrates to Canada that the WTT meets the Technical Specifications outlined in Appendix 1.0 to Annex A and is able to pass the mandated acceptance testing dictated by Canada.

4.1.2 The First Article Acceptance process must consist of the following activities:

4.1.2.1 Completion of the necessary demonstrations, inspections, certifications or testing needed to show compliancy with the Technical Specification; and

4.1.2.2 Completion of the mandated acceptance tests outlined in 4.1.5 to prove the WTT conforms to operational requirements.

4.1.3 The Contractor must provide Canada with a minimum of 30 days advance notice of all FAAP activities in order for Canada to be present.

4.1.4 The Contractor must provide a First Article Acceptance Plan (FAAP) IAW CDRL WTT-SE-101 at Appendix A3.6 (page 42) to ANNEX D and its associated DID WTT-SE-101 at Appendix A4.6 (page 68) to ANNEX D which covers the activities of paras 4.1.2.1 and 4.1.2.2.

4.1.5 Mandated Acceptance Tests:

4.1.5.1 Static roll over threshold test as described at A1.1.3.6;

4.1.5.2 Dynamic roll over threshold test as described at A1.1.3.7;

4.1.5.3 Hot temperature water variation test as described at A1.2.1.25.1;

4.1.5.4 Cold temperature water variation test as described at A1.2.1.25.2;

4.1.5.5 Water Heater Test as described at A1.2.2.8;

4.1.5.6 Road and Cross-country tests as described at A1.2.3.2.2; and

4.1.5.7 Shock and Vibration tests as described at A1.4.

4.1.6 The Contractor must provide Acceptance Test Reports (ATRs) for the mandated acceptance test at Para 4.1.5 above, as well as for any testing chosen to be done under the conditions of Para 4.1.2.1 above. These ATRs must be IAW CDRL WTT-SE-103 at Appendix A4.8 to ANNEX D and its associated DID WTT-SE-103 at Appendix A4.8(page 6) to ANNEX D.

# 5.0 INTEGRATED LOGISTICS SUPPORT (ILS)

## 5.1 Maintenance Concept

5.1.1 The WTT will be maintainable by CAF operators and technicians in both a field and base environment, with maintenance tasks generally divided as follows:

5.1.1.1 **Operator Maintenance:** consisting generally of simple tasks such as preliminary diagnosis of faults, visual inspections, minor preventive and corrective maintenance, and cleaning. Task duration less than one (1) hour.

5.1.1.2 **Technician Maintenance, First Line:** consisting of preventive and minor corrective maintenance tasks by repair or replacement of parts, in the field, using the standard maintenance tools of the EME 00129 and WFE 00305 trades and any provided with the WTT. Task duration generally less than four (4) hours.

5.1.1.3 **Technician Maintenance, Second Line:** consisting of major corrective maintenance requiring additional tools, Special Tools and Test Equipment (STTE List), controlled environmental conditions, or specific infrastructure requirements. Task duration generally between four (4) and twenty-four (24) hours.

## 5.2 Instruments, Decals, Data Plates and Warnings

5.2.1 The Contractor must deliver all onboard instruments, decals and data plates marked in metric units.

5.2.2 Where international symbols are not possible, the Contractor must provide bilingual markings in English and Canadian French, as per paragraph 5.3.5.

5.2.3 The Contractor must provide warning and precautionary data plates in both official languages of Canada (English and Canadian French) where necessary to protect personnel and equipment, as per paragraph 5.3.5.

## 5.3 Technical Publication Package

5.3.1 The Contractor must prepare and deliver the following Technical Publications:

5.3.1.1 Operator Manual

5.3.1.1.1 The Contractor must provide an **Operator Manual** for the WTT IAW CDRL WTT-ILS-201 at Appendix A3.9 (page 45) and its associated DID WTT-ILS-201 at Appendix A4.8 (page 72) to this ANNEX D.

5.3.1.2 Repair Manual

5.3.1.2.1 The Contractor must provide a **Repair Manual** for the WTT IAW CDRL WTT-ILS-202 at Appendix A3.10 (page 46) and its associated DID WTT-ILS-202 at Appendix A4.10 (page 76) to this ANNEX D.

5.3.1.3 Permissive Repair Schedule and Standard Repair Times

5.3.1.3.1 The Contractor must provide a **Permissive Repair Schedule and Standard Repair Times** for the WTT IAW CDRL WTT-ILS-203 at Appendix A3.11 (page 47) and its associated DID WTT-ILS-203 at Appendix A4.11 (page 78) to this ANNEX D.

5.3.1.4 Illustrated Parts Manual

5.3.1.4.1 The Contractor must provide an **Illustrated Parts Manual** for the WTT IAW CDRL WTT-ILS-204 at Appendix A3.12 (page 48) and its associated DID WTT-ILS-204 at Appendix A4.12 (page 80) to this ANNEX D.

5.3.1.4.2 The Illustrated Parts Manual does not need to be provided in Canadian French.

5.3.1.5 Operator Training Package

5.3.1.5.1 The Contractor must provide an **Operator Training Package** for the WTT IAW CDRL WTT-ILS-205 at Appendix A3.13 (page 49) and its associated DID WTT-ILS-205 at Appendix A4.13 (page 82) to ANNEX D.

5.3.1.6 Preservation, Storage and Reactivation Instructions

5.3.1.6.1 The Contractor must provide a **Preservation, Storage and Reactivation Instructions** for the WTT IAW CDRL WTT-ILS-206 at Appendix A3.14 (page 50) and its associated DID WTT-ILS-206 at Appendix A4.14 (page 84) to ANNEX D.

5.3.1.7 Stowage, Shipping and Handling Instructions

5.3.1.7.1 The Contractor must provide a **Stowage, Shipping and Handling Instructions** for the WTT IAW CDRL WTT-ILS-207 at Appendix A3.15 (page 51) and its associated DID WTT-ILS-207 at Appendix A4.15 (page 86) to ANNEX D.

5.3.1.8 Equipment Data Summary

5.3.1.8.1 The Contractor must provide an **Equipment Data Summary** for the WTT IAW CDRL WTT-ILS-208 at Appendix A3.16 (page 52) and its associated DID WTT-ILS-208 at Appendix A4.16 (page 88) to ANNEX D.

5.3.2 Front Matter

5.3.2.1 The Contractor must include the following in each Technical Publication:

5.3.2.1.1 A cover page (a template of which will be provided by the ILSM) showing the date the publication was issued and the model/system designation;

5.3.2.1.2 A List of Effective Pages;

5.3.2.1.3 A Revision Control Table;

5.3.2.1.4 A detailed Table of Contents and List of Figures & Tables; and

5.3.2.1.5 An Acronyms and Abbreviations table

5.3.3 Supplementary Information

5.3.3.1 The Contractor must provide supplementary information, in the portions of text that require it, with one or more of the following notices, in the order listed:

5.3.3.1.1 **Danger.** The danger advisory will be used to draw attention to an extreme, violent and continuous hazard to life;

5.3.3.1.2 **Warning.** The warning advisory will be used to emphasize an operating or maintenance procedure, practice, condition, statement, etc, which if not strictly observed, could result in injury to or death of personnel;

5.3.3.1.3 **Caution.** The caution advisory will be used to emphasize an operating or maintenance procedure, practice, condition, statement, etc., which if not strictly observed, could result in maintenance, etc., damage to or destruction of equipment, loss of mission effectiveness or long-term health hazards to personnel;

5.3.3.1.4 **Note.** The note will be used to point out a procedure, event or practice that it is desirable to highlight; and,

5.3.3.1.5 **Example.** The example will be used when required to clarify the preceding text.

5.3.4 Copyright - Foreground and Background Information

5.3.4.1 The Contractor must incorporate the copyright symbol and one of the following notices into the Technical Publications, for all Foreground and Background information that is subject to copyright regardless of the form or medium upon which it is recorded:

5.3.4.1.1 Intellectual Property (IP) in Foreground that belongs to the Contractor: "© (insert year) (insert IP owner). This deliverable was delivered under Contract no. XXXX and contains Foreground Intellectual Property (IP). Her Majesty the Queen in Right of Canada has a royalty-free and perpetual license to the IP and is permitted to use, reproduce, modify, and translate, including authorizing contractors to reproduce, modify, and translate, in whole or in part the deliverable for all government purposes including competitive tendering. Refer to the contract terms for additional details as required."

5.3.5 The Contractor must provide the following certificates, for each accepted first-language publication produced under ANNEX D para 5.3.1, to the DND ILSM for approval:

5.3.5.1 Certificate of Validation (Form DND 590);

5.3.5.2 Certificate of Compliance (Form DND 591);

5.3.5.3 Certificate for Reproducible Copy (Form DND 642);

5.3.6 Official Language Requirements

5.3.6.1 The Contractor must deliver all Technical Publications in English and Canadian French (unless indicated above).

5.3.6.2 The Contractor must have all Technical Publications translated by certified translators, such as members of an authorized provincial association of translators, to ensure the quality of translated text.

5.3.6.3 The Contractor must ensure all translations are consistent with approved DND terminology. Approved terminology sources, in order of priority, are as follows:

5.3.6.3.1 Canadian Oxford Dictionary Second Edition (for English);

5.3.6.3.2 Le Petit Robert Edition 2017 (for French); and

5.3.6.3.3 Termium, PSPC Translation Bureau Linguistic Data Bank (http://www.termiumplus.gc.ca/);

5.3.6.4 It is recommended that the Contractor discuss with DND ILSM a bilingual lexicon of terms specific to the WTT before proceeding with production translation.

5.3.6.5 The Contractor must review and accept responsibility for the validity of all (both their own and all sub-Contractors) information found in the Technical Publications.

5.3.6.6 The Contractor must provide to the DND ILSM for approval, certificates of Translation Accuracy Check (DND2515) for each translated Publication produced under para 5.3 of ANNEX D.

5.3.7 All Technical Publications must be free of advertising, commercial logos, or any other type of promotional marking.

## 5.4 Provisioning Documentation

5.4.1 The Provisioning Documentation (PD) lists and describes in detail the parts that make up the WTT as well as any specialized or specific items required to support the use and maintenance of the WTT. The PD allows the WTT's Technical Authority to plan and implement a sparing and support strategy.

5.4.2 Included in the PD are all the procurable parts — either from the Contractor or a third party — of the WTT to the Lowest Replaceable Unit (LRU). Also considered procurable parts are the consumables required to operate and maintain the WTT (chemicals, lubricants, etc.) and specialized equipment (special tools, training aids, transport containers, etc.) specific to the WTT.

5.4.3 The Contractor must prepare and deliver the following Provisioning Documentation:

5.4.3.1 **Provisioning Parts Breakdown**

5.4.3.1.1 The Contractor must provide a **Provisioning Parts Breakdown** IAW CDRL WTT-ILS-209 at Appendix A3.17 (page 53) and its associated DID WTT-ILS-209 at Appendix A4.17 (page 90) to this ANNEX D.

5.4.3.2 **Supplementary Provisioning Technical Documentation**

5.4.3.2.1 The Contractor must provide **Supplementary Provisioning Technical Documentation** IAW CDRL WTT-ILS-210 at Appendix A3.18 (page 54)

and its associated DID WTT-ILS-210 at Appendix A4.18 (page 93) to this ANNEX D.

5.4.3.3 **Contract Delivery Status Report - Spares**

5.4.3.3.1 The Contractor must provide a **Contract Delivery Status Report - Spares** IAW CDRL WTT-ILS-216 at Appendix A3.24 (page 60) and its associated DID WTT-ILS-216 at Appendix A4.24 (page 105) to this ANNEX D.

5.4.3.4 **Contract Delivery Status Report - WTT**

5.4.3.4.1 The Contractor must provide a **Contract Delivery Status Report - WTT** IAW CDRL WTT-ILS-217 at Appendix A3.25 (page 61) and its associated DID WTT-ILS-217 at Appendix A4.25 (page 107) to this ANNEX D.

## 5.5 Initial Provisioning Conference

5.5.1 The Contractor must hold and chair an Initial Provisioning Conference (IPC). The IPC will occur after the Contractor has delivered Provisioning Documentation (PD) suitable for a successful IPC as determined by the DND ILS Manager.

5.5.2 The purpose of an IPC is to allow DND to verify that the Provisioning Documentation reflects the current and complete configuration of the equipment being procured by comparing it against the Illustrated Parts Manual and draft Provisioning Documentation, and to select the range of spares required to support the system during an initial period of service of two years. For this purpose, the Contractor must provide:

5.5.2.1 A suitable conference facility with projector(s), and three (3) unrestricted, hard-wired, broadband Internet access points through Ethernet (RJ45) connections;

5.5.2.2 Engineering and product support assistance;

5.5.2.3 The equipment for physical examination, if feasible;

5.5.2.4 Engineering, reliability and maintainability data; and

5.5.2.5 Modification data, if applicable.

5.5.3 The Contractor must provide Meeting Documentation for the IPC, as per requirements found at ANNEX D para. 3.3.6.

## 5.6 Identification Plates

5.6.1 The Contractor must provide **Identification Plates – Design Template & Populated Designs** IAW CDRL WTT-ILS-211 at Appendix A3.19 (page 55) and its associated DID WTT-ILS-211 at Appendix A4.19 (page 95) to this ANNEX D.

5.6.2 The Contractor must attach Identification Plates to the following components for ease of tracking within the Canadian Forces Supply System:

5.6.2.1 Prime Equipment;

5.6.2.2 Major Spares;

5.6.2.3 STTE;

5.6.2.4 Training Equipment that Canada will own;

5.6.2.5 Transportation, Shipping, Storage Containers that are not single-use;

5.6.2.6 Support Equipment (excluding common tools), and

5.6.2.7 Automatic Test Equipment.

5.6.3 Identification Plates must be considered as procurable parts and included in any and all relevant ILS Provisioning Documentation.

## 5.7 Controlled & Non-Controlled Goods List

5.7.1 Contractor must provide the **Controlled & Non-Controlled Goods** List with the Demilitarization Code (DMC) IAW WTT-ILS-212 at Appendix A3.20 (page 56) and its associated DID WTT-ILS-212 at Appendix A4.20 (page 100) to this ANNEX D.

## 5.8 Identification Labels for Storage and Shipment, and Packaging Codes

5.8.1 The Contractor must supply all parts and equipment, except the Interim Spares, packaged and packed as per D-LM-008-001/SF-001 following:

5.8.1.1 Level B Limited Military Package;

5.8.1.2 Level B Limited Military Pack;

5.8.2 The Contractor must label all packaging, produced under 5.8.1 above, as per D-LM-008-002/SF-001, using D-LM-008-011/SF-001 to prepare the required codes for packaging and preservation.

5.8.3 The Contractor must provide **Identification Labels for Storage and Shipment, and Packaging Codes** IAW CDRL WTT-ILS-213 at Appendix A3.21 (page 57) to ANNEX D, and its associated DID WTT-ILS-213 at Appendix A4.21 (page 99) to this ANNEX D.

## 5.9 Repair and Overhaul Plan

5.9.1 The Contractor must provide a **Repair and Overhaul Plan** IAW CDRL WTT-ILS-214 at Appendix A3.22 (page 58) to ANNEX D, and its associated DID WTT-ILS-211 at Appendix A4.22 (page 102) to this ANNEX D.

## 5.10 Warranty Support Plan

5.10.1 The Contractor must deliver a **Warranty Support Plan** IAW CDRL WTT-ILS-215 at Appendix A3.23 (page 59) to ANNEX D, and its associated DID WTT-ILS-215 at Appendix A4.23 (page 103) to this ANNEX D.

5.10.2 The Warranty Support Plan must contain the Front Matter as described in 5.3.2 above.

## 5.11 Data Deliverable Format

5.11.1 Unless otherwise specified as a specific requirement, the Contractor must deliver all of the soft copies of data deliverables, in formats compatible with the office software currently in use by the DND as listed:

5.11.1.1 Microsoft (MS) Windows 7 Enterprise Operating System (OS), Service Pack 1;

5.11.1.2 MS Internet Explorer (IE) 9.0 with 256 Bit Encryption;

5.11.1.3 MS Office Professional Plus 2013 (Word, Excel, Access, PowerPoint and Outlook);

5.11.1.4 Adobe Acrobat X; and

5.11.1.5 WinZip 8.1 SR-1.

# 6.0 ENVIRONMENTAL HEALTH AND SAFETY

## 6.1 General

6.1.1 Environmental Health and Safety (EHS) consideration must be incorporated and documented into the decision making process for the Work performed under this Contract. EHS documentation must be maintained within the project file throughout the life of this Contract. The Contractor must provide for and allow DND inspection and monitoring of EHS documentation throughout the life of the contract.

6.1.2 Polychlorinated Biphenyls (PCBs), halocarbons (as identified within the SOR/99-7 - Ozone-Depleting Substances Regulations, 1998), and asbestos are not to be incorporated into the design, operation and maintenance of the equipment, and products used in equipment support activities.

6.1.3 The Contractor must identify and report all sources of mercury contained and used within the design, operation and maintenance of the equipment, and products used in equipment support activities.

6.1.4 The Department is committed to the Federal programs to reduce and eliminate emissions from toxic substances. Contractors must identify and submit justifications for the use of all regulated products and those containing substances identified within the Accelerated Reduction/Elimination of Toxics (ARET, http://www.ec.gc.ca/nopp/aret/en/list.cfm), National Pollutant Release Inventory (NPRI, http://www.ec.gc.ca/pdb/npri/npri_home_e.cfm) and List of Challenge Substances (http://www.chemicalsubstanceschimiques.gc.ca/challenge-defi/list_e.html), and also for products containing heavy metals (heavy metals are those identified within Schedule 1 of the Canadian Environmental Protection Act (CEPA)) to the technical authority for approval.

6.1.5 Canada Labour Code, Part II dictates that the least hazardous materials should be used at the workplace. Therefore, the Contractor is to strive to use the least hazardous product that meets the requisite performance requirements.

6.1.6 The Contractor must incorporate EHS warnings and instructions in direct relation of the EHS risks presented in the contents into documentation.

6.1.7 It is the Contractor's responsibility to ensure that specifications, standards, support documents and test programs are reviewed for EHS compliance.

## 6.2 Environmental Management System

6.2.1 The Contractor must have a management system in place to control environmental, health and safety impacts resulting from their activities, products and services.

6.2.2 The Contractor must have a formalized set of procedures and control measures in place to achieve conformance with the requirements of this Work, while ensuring environmental, health and safety protection and pollution prevention.

6.2.3 The Contractor must also make reasonable effort to monitor that all subcontractors are in compliance with applicable environmental laws and regulations.

## 6.3 EHS Packaging Labels and MSDS

6.3.1 The Contractor must label and ship goods falling within the Hazardous Products Act, R.S.C. 1985, C. H-3 and regulation(s) there under, in accordance with the said Act and regulation(s).

6.3.1.1 The Contractor must ship goods accompanied by the required Material Safety Data Sheet(s) (MSDS), completed in either English or Canadian French.

6.3.1.2 The Contractor must clearly identify the contents of the hazardous material with labels, and the MSDS must explain what those hazards are.

# 7.0 TECHNICAL REQUIREMENTS

## 7.1 Overview

7.1.1 The Contractor must comply with all specified requirements of the WTT, stated in A1.0 APPENDIX: WTT TECHNICAL SPECIFICATION.

# A1.0 APPENDIX: WTT TECHNICAL SPECIFICATION

## A1.1 System Requirements

### A1.1.1 General

A1.1.1.1 The Water Tank Trailer (WTT) must consist of the following components, and is further described in detail under the **System Component Requirements** section:

A1.1.1.1.1 Water Tank;

A1.1.1.1.2 Water Heating System (WHS); and,

A1.1.1.1.3 Trailer Chassis

A1.1.1.2 For the WTT to be admissible for importation into Canada, the manufacturer must be registered as a commercial importer with Transport Canada (TC). The application package is available upon request from Transport Canada.

A1.1.1.3 The WTT must meet all applicable Canadian Motor Vehicle Safety Standards (CMVSS) at the time of manufacture.

A1.1.1.4 The WTT must not require more than one (1) person to operate and perform operator maintenance.

### A1.1.2 Transportability

A1.1.2.1 The WTT must be transportable by rail IAW MIL-STD-1366E, Chapter 5.2.

A1.1.2.2 Tie-Down and Lifting provisions of the WTT must comply with MIL-STD-209 (Revision K).

A1.1.2.3 The WTT must have emergency towing and recovery facilities that comply with STANAG 4478 ED1.

A1.1.2.4 The WTT at Gross Trailer Weight (GTW) must be safely towable and be fully compatible with all necessary requirements and capacities of the two (2) prime mover vehicles:

A1.1.2.4.1 MSVS, Militarized Commercial of-the-Shelf (MilCOTS)

A1.1.2.4.2 MSVS, Standard Military Pattern (SMP)

A1.1.2.4.3 All required technical data for these two (2) vehicles can be found in the references, C-32-F42-000/MA-000, and C-30-K77-000/MB-000.

### A1.1.3 WTT Mobility Criteria

A1.1.3.1 The WTT width must not exceed 2.60 m.

A1.1.3.2 The WTT length must not exceed 6.0 m.

A1.1.3.3 The WTT's angle of departure must be greater than 18 degrees (see Para A1.2.3.1.3) with the Rear Impact Guard deployed (angle is measured IAW SAE J1100 dimension A106-2 and with the WTT at GTW and tire pressure adjusted to the manufacturer's recommended inflation pressure).

A1.1.3.4 The fully loaded WTT while moving at cross-country speeds (3-5 km/h) must ford water depths of no less than 750 mm, without experiencing ingress of water that would be detrimental to the function of the trailer or compromise the water quality, IAW STANAG 2805 ED.5.

A1.1.3.5 When driving cross-country at speeds of 3-5 km/h the WTT must move through (forward and reverse) light vegetation without damage to exterior components.

A1.1.3.5.1 Light vegetation is defined as small trees/brush with a stem diameter of 25 mm and 1.5 meter in height.

A1.1.3.6 The WTT, while loaded at the GTW, must attain a static rollover threshold (ROT) of not less than 29 degrees. The ROT will be measured using the procedures IAW SAE J2180.

A1.1.3.7 The WTT (full and half-full of water) must remain stable at all times and safely negotiate a 60m minimum radius design curve/corners in accordance with Geometric Design Guide for Canadian Roads without overturning. Chapter 3, Table 3.2.3, first serial in Table explains test requirements. An e-max of 0.04 or less, a design value for f at 0.17 or greater, and a safety factor of 1.5 the design speed (40km/h X 1.5 = 60km/hr) will be added to the conditions. This Dynamic ROT must be proven by way of mathematical calculation or analysis, as well as actual live testing. If the trailer's inside wheels do not lift off while being tested in this manner, the trailer is said to have passed this requirement.

A1.1.3.8 The WTT track width must not exceed or be less than the track width limits of the two (2) prime movers.

A1.1.3.9 The WTT tongue weight load must be between 10% and 15% of the GTW, regardless of the percentage laden.

### A1.1.4 CARC Painting

A1.1.4.1 The WTT must be Chemical Agent Resistant Coating (CARC) painted in accordance with Appendix 6.0 to Annex A - Work Statement for Chemical Agent Resistant Coating System.

A1.1.4.1.1 Painting procedures in accordance with the paint manufacturer's recommendations must be used, and the finished product must produce a durable finish and a smooth appearance free from runs, sag, and orange peel.

## A1.2 System Component Requirements

### A1.2.1 Water Tank

A1.2.1.1 The Water Tank must have water storage capacity of 3000 liters.

A1.2.1.2 All material which comes in contact with potable water must conform to American National Standards Institute / National Sanitation Foundation (ANSI/NSF) Standards 14 and 61 for potable water contact.

A1.2.1.3 The stainless steel material for the interior of the Water Tank must be 316L, 316Ti or better IAW description in ASTM A240.

A1.2.1.4 Filler metal for all welds must be 316L stainless steel or better

A1.2.1.5 Stainless steel piping and fittings used on the WTT must be 316L or better.

A1.2.1.5.1 Welded tubing assemblies must also utilize 316L stainless steel filler metal or better.

A1.2.1.6 All internal surfaces of the Water Tank must have a No. 4 sheet finish, as defined by the Specialty Steel Industry of North America (SSINA), and must be smooth and pit free.

A1.2.1.7 Welded Water Tank surfaces must be finish-ground. The resultant surface must be bright with visible grain and minimal mirror reflection. Surface roughness must have a Root Mean Square (RMS) reading of 25 micro-inches or less and be uniform with no scratches, or major directional markings.

A1.2.1.8 Heat discoloration must be removed from weld zones, and a No. 4 finish applied to the welds to blend with the grain and texture of the tank's base metal.

A1.2.1.9 After grinding, polishing, and re-finishing, all internal surfaces of the Water Tank as well as other welded components must be thoroughly cleaned and be free of dirt, dust, rust, or other solid, surface or liquid contaminants. The entire Water Tank interior must then be chemically pickled and passivated as per American Section of the International Association for Testing Materials ASTM A380 and/or ASTM A967.

A1.2.1.10 The Water Tank must have no free iron after passivation, as per ASTM A967.

A1.2.1.11 Steel components mounted or installed inside the Water Tank must be made of 316, 316Ti or 316L grade stainless steel IAW ASTM A240. However, components with welds must be made of 316Ti or 316L grade stainless steel only.

A1.2.1.11.1 Component design and method of installation must not create an environment that promotes microbial growth or the development of crevice corrosion.

A1.2.1.12 The Water Tank must have internal reinforcements. These reinforcements will also serve as baffles to reduce water movement front to back and side to side during transport.

A1.2.1.12.1 Openings must be provided around the edges of each baffle to allow complete draining of the tank.

A1.2.1.12.2 These baffles must have manway openings to allow for internal physical inspection of all areas of the interior of the tank.

A1.2.1.13 The Water Tank must have a secure and protected venting system that allows pressure release and impedes a vacuum being formed when drawing water.

A1.2.1.14 The Water Tank must be resistant to chlorination and super chlorination.

A1.2.1.15 The Water Tank must have a water volume indicator that is legible from outside the Water Tank.

A1.2.1.16 The Water Tank must have the marking “POTABLE WATER ONLY / EAU POTABLE SEULEMENT” clearly visible and marked in Large Black letters on all sides of the tank. Markings must be IAW Annex/Appendix - Chemical Agent Resistant Coating System.

A1.2.1.17 The WTT must have a simple means to easily drain all components of water.

A1.2.1.18 For maintenance purposes, the WTT must be designed and manufactured to allow the removal of the Water Tank from the Trailer Chassis.

A1.2.1.18.1 The releasing of the Water Tank from the trailer chassis must:

A1.2.1.18.1.1 Require only common shop tools; and,

A1.2.1.18.1.2 Be done with only non-destructive actions, excluding common shop consumables such as locknuts and lock washers.

A1.2.1.18.2 The Water Tank must be designed and manufactured with integral lifting aids to allow the removal of the empty Water Tank from the Trailer Chassis using overhead lift or a fork lift. The Water Tank must not have any lifting aids incorporated in its upper half unless those lifting aids allow the lifting of the entire WTT unladed.

A1.2.1.18.2.1 The integral liftings aids must be marked with “EMPTY TANK LIFT ONLY / SOULEVAGE DE RÉSERVOIR VIDE SEULEMENT”

A1.2.1.18.3 The Water Tank must be designed and manufactured so as to remain upright and stable on a flat, level surface without the need for support stands, blocking, or any other part that is not a part of the Water Tank.

A1.2.1.19 The Water Tank water outlets, inlets, manhole and faucets must be equipped with covers that seal against leaks, mud, dust, insects, vermin and other contaminants, and be recessed within the dimensions stated in para A1.1.3.1 and A1.1.3.2.

A1.2.1.20 The Water Tank water outlets, inlets, manhole and faucets must all have anti-tampering locking devices that can accept a standard padlock with locking bar no smaller than 0.5 cm and no bigger than 1cm.

A1.2.1.21 The Water Tank must have at least one (1) SS 5.08 cm (2”) inlet, with camlock fitting cover and open/close valve to enable secure filling from external sources.

A1.2.1.22 The Water Tank must have a gravity-fed SS 5.08 cm (2”) outlet with camlock fitting cover and open/close valve, at the lowest possible point, to ensure the complete draining of the tank.

A1.2.1.23 The Water Tank must have two (2) gravity-fed SS 2.54 cm (1“) faucet for quickly refilling jerry cans, water bottles, or “camelbacks”.

A1.2.1.24 Water Tank Top Access

A1.2.1.24.1 In order to safely facilitate access to the top of the Water Tank, a ladder or steps and handhold system must be provided. This ladder or system must afford the operator with the ability to maintain three (3) points of contact with the WTT while carrying out the tasks of filling, inspecting and camouflaging the WTT.

A1.2.1.24.1.1 The ladder or step system must not impede the function of the WTT or the use of its equipment.

A1.2.1.24.2 All surfaces that may be used as a step area must function as such, and have a non-slip surface.

A1.2.1.24.2.1 Non-slip surfaces must comply with the MIL-PRF-24667C Performance Specification: Coating System, Non-Skid, Type I, Composition G.

A1.2.1.24.3 The Water Tank must have a top access manhole for maintenance or for bulk refilling of the tank:

A1.2.1.24.3.1 The manhole diameter must be no less than 61 cm.

A1.2.1.24.3.2 The manhole lid must have a device to safely keep it from closing by accident.

A1.2.1.25 The Water Tank must be double-walled and insulated. The insulation must be sufficient to minimize rapid water temperature fluctuation when exposed to temperature extremes. The contractor must test the insulation properties to ensure they pass the following tests:

A1.2.1.25.1 When the WTT is filled with 3000 L of water at 10°C (± 2°C), the increase in the average water temperature must not be more than 1°C every two (2) hours while exposed to an ambient temperature of 49°C. This temperature increase must remain constant (1°C or under, for every two (2) hours of exposure) for at least eight (8) hours.

A1.2.1.25.2 When the WTT is filled with 3000 L of water at 10°C (± 2°C), the decrease in the average water temperature must not be more than 1°C every two (2) hours, while exposed to an ambient temperature of -40°C. This temperature decrease must remain constant (1°C or under, for every two (2) hours of exposure) for at least eight (8) hours.

A1.2.2 **Water Heating System (WHS)**

A1.2.2.1 The WHS must monitor, display, and allow the operator to manually set the temperature of the water.

A1.2.2.2 The WHS must be designed to mitigate against drinking water contamination, and must be based on proven, manufactured and tested existing systems.

A1.2.2.3 The WHS must use only F-34 diesel fuel as its sole source of water heating fuel, in accordance with NATO single fuel policy.

A1.2.2.4 The WHS's control system and display must run on 24 VDC.

A1.2.2.5 The WHS's electrical power must be provided by:

A1.2.2.5.1 The prime mover, through the trailer's electrical connection, Pin K, max 15 Amp. See Para A1.2.3.5.3. for details and,

A1.2.2.5.2 A 24VDC Absorbed Glass Mat, Deep-cycle battery pack that is charged through the connection points listed in A1.2.3.5.3.

A1.2.2.6 The WHS's control system must automatically switch power source if one or the other power source is not supplying the required power.

A1.2.2.7 The WHS must have a Master Power switch that will turn the WHS off and not draw any power. This Master Power switch must not be a circuit breaker.

A1.2.2.8 The contractor must test and ensure that the WTT Water heating System can start and continually function (without an external electrical supply or refueling) to ensure water does not freeze in extreme cold conditions. The heater must start (after being cold soaked for 8 hrs at -40°C) and warm the water in order to prevent it from freezing for a minimum of 72 hours. The Water Tank must start this test filled with 3000L of 10°C water (±2°C). The water at each water outlet, and the outlets themselves must remain ice free and operational throughout this test duration.

A1.2.2.9 The fire extinguisher NSN 4210-21-904-1381 and accompanying bracket NSN 4210-01-345-8175 must be mounted on the WTT.

A1.2.2.10 All WHS electrical components and wiring must meet and be IAW CSA C22.1, ED.23, and CSA C22.2, ED.23

A1.2.3 **Chassis**

A1.2.3.1 **General**

A1.2.3.1.1 The WTT must support a payload of no less than 3500 kg.

A1.2.3.1.2 The Trailer Chassis must be a tandem-axle design.

A1.2.3.1.3 The Trailer Chassis must be equipped with Rear Impact Guard IAW CMVSS 223 that must be retractable or foldable.

A1.2.3.1.4 The WTT must have an adjustable Rear Support Leg in order to stabilize the WTT when it is detached from either of the two (2) prime movers.

A1.2.3.1.5 The Rear Support Leg must fold or retract out of the way in a manner that will not affect any function of the WTT.

A1.2.3.1.6 The Trailer Chassis must have recessed or bush-guarded protected lights, reflectors and related components IAW MIL-STD-1179

A1.2.3.1.7 The Trailer Chassis must have a mounting point for an anti-static strap NSN 5920-00-636-3231.

A1.2.3.2 **Suspension**

A1.2.3.2.1 The Trailer Chassis suspension system, mounts and frame must all function in a manner so as to ensure all components of the WTT, at GTW, remain free from damage due to shock and vibration in all conditions as described in this SOW, and while meeting all conditions throughout the range of WTT Mission Profile at A2.0.

A1.2.3.2.2 The Contractor must test and ensure that the WTT passes the Road and Cross-Country Testing. The testing will consist of towing the WTT in accordance with the WTT Mission Profile at Appendix A2.0, Paras A2.4.1 serials c, d, e, and f. Suitable roads, Trails, and Cross Country routes must be mutually agreed upon by Canada and the manufacturer. To assist in this determination, the descriptions in the Mission Profile as well as the description in Mil STD-810H standard 514.8, Annex C pages 514.8C – 18 and 19, Para 2.3, Category 6, sub para a), sub-sub paras 1-5 must be used. The WTT at GTW, must undergo five (5) times the equivalent of one (1) mission profile, therefore serial c - 200 km, d – 500 km, e – 250 km, and f – 50 km.

A1.2.3.2.3 Any damage which creates conditions described below that cannot be corrected in 30 minutes or less using tools or parts normally carried on the trailer or towing vehicle, constitutes a test failure:

A1.2.3.2.3.1 Prevents operation,

A1.2.3.2.3.2 Further operation would be unsafe,

A1.2.3.2.3.3 Further operation might result in extensive damage to the equipment.

A1.2.3.2.4 Additionally, major components must meet the requirements listed at A1.4 Shock and Vibration Requirements

A1.2.3.3 **Brakes**

A1.2.3.3.1 The Trailer Chassis must be provided with full air-actuated service brakes IAW CMVSS 121.

A1.2.3.3.2 The front of the Chassis must be equipped with air hoses, connectors and couplings and conform to STANAG 2604 ED.3, as follows:

A1.2.3.3.2.1 Position of connectors; per Para 4, Table 1, and Figure 1.

A1.2.3.3.2.2 Nomenclature to be used for Glad-hands and brake lines is: "Service" and "Emergency".

A1.2.3.3.2.3 Identification of connector colour markings will be:

1.2.3.3.2.3.1 Service Glad-hands and brake lines: blue; and,

1.2.3.3.2.3.2 Emergency Glad-hands and brake lines: red

A1.2.3.3.3 The Trailer Chassis must be equipped with parking brakes which must control and hold motionless the fully-laden WTT, when facing in either direction up or down a hard surfaced slope of no less than 20% grade IAW SAE J1452.

A1.2.3.3.4 The Trailer Chassis air brake system must be provided with valves, drains or other methods of expelling moisture from all air reservoirs and lines.

A1.2.3.4 **Wheels and Tires**

A1.2.3.4.1 The Trailer Chassis must have tires that are the same as the two (2) prime movers, which are Michelin 395/85R20 XZL TL 168 G tires.

A1.2.3.4.2 The Trailer Chassis must have one (1) full size spare tire and wheel assembly.

A1.2.3.4.3 The trailer Chassis must be provided with 4 suitably sized wheel chocks

A1.2.3.4.4 The Trailer Chassis must have a spare wheel carrier assembly suitable for stowage and deployment of the spare tire and wheel assembly.

A1.2.3.4.5 The wheel carrier, spare tire and wheel assembly must not impede or hamper any function of the WTT.

A1.2.3.4.6 The Trailer Chassis tire and wheel assembly must be changed, including the removal and remounting of the tire and wheel assembly in the carrier, by two (2) soldier, within 30 minutes, using only tools that are included with the Prime Mover of which runs the same size tire and wheel assembly.

A1.2.3.4.7 The Trailer Chassis must have wheel splash and stone throw protection above all wheels and mud flaps behind the rear wheels.

A1.2.3.5 **Electrical System**

A1.2.3.5.1 The Trailer Chassis must have a 24 VDC Standard Military Pattern (SMP) lighting system IAW STANAG 2601 ED.3. The Lamps, reflectors, and signals must be IAW MIL-STD-1179

A1.2.3.5.2 The Trailer Chassis must have a blackout lighting system IAW STANAG 4381.

A1.2.3.5.3 The plug that connects to the prime mover must be IAW STANAG 4007 Ed 2. All WTT electrical connectors or points of connection must have no less than an IP56 rating or equivalent, IAW NEMA IEC 60529.

A1.2.3.6 **Stowage Compartments**

A1.2.3.6.1 The Trailer Chassis must have integrated Stowage Compartments, and be recessed within the dimensions stated in para A1.1.3.1 and A1.1.3.2.

A1.2.3.6.2 The Stowage Compartments must be of adequate size in order to store four (4) manufacturer-supplied wheel chocks, two (2) large camouflage nets NSN 1080-20-008-1127, all tools required for Operator Maintenance

task IAW the Maintenance Concept at para 5.1.1.1 and all equipment specifically recommended and supplied by the manufacturer.

A1.2.3.6.3 The Stowage Compartments must have a locking mechanism that will accept a padlock meeting ASTM F883-04 requirement F2S2.

A1.2.3.7 **Data Plates and Markings**

A1.2.3.7.1 The Trailer Chassis must have a license plate holder, IAW SAE J686, mounted at the rear.

A1.2.3.7.2 The Trailer Chassis must have the following information permanently affixed in a conspicuous and protected location:

A1.2.3.7.2.1 The manufacturer's name, model number, model year and Vehicle Identification Number (VIN);

A1.2.3.7.2.2 The GTW ratings; and

A1.2.3.7.2.3 The load data.

A1.2.3.8 **Drawbar and Accessories**

A1.2.3.8.1 The Trailer Chassis must have a tow eye IAW STANAG 4101.

A1.2.3.8.2 The Drawbar must be compatible with the height of the pintle of each of the two (2) prime movers ± 5% (based on load and tire pressure)

A1.2.3.8.3 The Drawbar must allow a swing radius between the rear of the two (2) Prime Movers and the Trailer, and must be IAW STANAG 4101.

A1.2.3.8.4 The Trailer Chassis tow eye must have a setting for being secured in the fixed position, so that it can be towed by Vehicles with a rotating pintle hook.

A1.2.3.8.5 The Trailer Chassis tow eye must rotate around the longitudinal axis.

A1.2.3.8.6 The Trailer Chassis must have safety chains that are sufficient in length and possess hooks at the ends of these safety chains that are compatible with the clevises of the two (2) prime movers.

A1.2.3.8.7 The WTT must have an adjustable front support leg in order to raise or lower the tongue, and stabilize the WTT when it is detached from either of the two (2) prime movers.

A1.2.3.8.7.1 The front support leg must fold or retract out of the way in a manner that will not affect the function of the WTT when it is attached to either of the two (2) prime movers.

## A1.3 Environmental/Climatic Requirements

A1.3.1 The WTT must safely meet all performance requirements in this specification, without physical damage or degradation to the WTT system and sub-systems, during and after

exposure to any combination of the meteorological and induced climatic conditions and factors identified in this specification.

A1.3.2 The WTT must be able to be safely stored in all climatic conditions and factors associated with A1, A2, A3, B1, B2, B3, C0, C1, and C2 climatic categories in accordance with AECTP 230, Edition 1, Leaflets 2311/1 through 2311/3 and STANAG 2895, Edition 1, Annex C.

A1.3.3 The WTT must be able to be safely towed, stand-by, and operable in all climatic conditions and factors associated with A1, A2, A3, B1, B2, B3, C0, C1, and C2 climatic categories in accordance with AECTP 230, Edition 1, Leaflets 2311/1 through 2311/3 and STANAG 2895, Edition 1, Annex C.

## A1.4 Shock and Vibration Requirements

A1.4.1 The major components of the WTT (listed below) with their vibration and shock isolation strategy must meet the requirements of AECTP 400, Method 401, A-3, and AECTP 400, page 116, table A-1, 2nd line “Transportation” X 3 shocks as per details:

A1.4.1.1 The Water Tank complete as described in A1.2.1, while at 50% water capacity as well as full,

A1.4.1.2 Water Heating System complete as described in A1.2.1.25.2

# A2.0 Water Tank Trailer (WTT) Mission Profile

## A2.1 Intended use

A2.1.1 WTT is intended for use worldwide to support and conduct of all types of land based operations. These operations range from disaster relief to combat operations when the Canadian Forces, including Joint or Land forces are ordered to deploy to perform land based operations.

## A2.2 Missions

A2.2.1 The WTT is a key support trailer for all Regular and Reserve Land Force units. It shall be usable for all the following missions:

A2.2.1.1 Daily domestic and continental operations, delivery water over highways, secondary roads and improvised road such as (but not limited to) cut lines, fire road, trails, etc.

A2.2.1.2 Leading and/or conducting a major international operation for an extended period, supporting Regular Forces Units in the conduct of the operations by transporting water on and off road.

A2.2.1.3 Response to crisis elsewhere in the world for shorter periods. The WTT will be deployed to Support Regular Forces Units in the conduct of the operations.

## A2.3 Geographical

A2.3.1 The WTT must perform all its functions with up to maximum gross loads and maintain stability, structural integrity, and operational capability. The WTT must perform in the following operating conditions:

A2.3.1.1 On Highway and Secondary roads;

A2.3.1.2 Through Light Vegetation over Trails and Cut Lines;

A2.3.1.3 On Severe washboard surfaces and cross country conditions;

A2.3.1.4 Over Rocky surfaces, Plowed fields, and through Sand and Mud; and

A2.3.1.5 Over Flooded terrain, as well as Snow and Ice.

## A2.4 Usage pattern

A2.4.1 The WTT fleet is expected to be used an average of 2500 kilometers per year. This usage is expected to take place 50% of the time on publicly maintained roads and the remainder on off roads conditions described above. Within the publicly maintained roads, approximately 50% of the total distance will be on paved surfaces, and the remainder will be gravel based and like substances. The table below lists activities that can take place during a mission. This table has been averaged over the life of the trailer over all activities (operations, training, administrative function, etc.) that can take place.

| Mission | Unit of Measure | Qty | Comment |
|---|---|---|---|
| a. Time | Duration Hours | 10 | |
| b. Length | Distance Kilometers | 200 | |
| c. Paved Road | % of Distance | 20 | Approx. 100 Km/h |
| d. Secondary road | % of Distance | 50 | Approx. 60 Km/h |
| e. Trails | % of Distance | 25 | Approx. 20 Km/h |
| f. X-Country | % of Distance | 5 | Approx. 3-5 Km/h |
| g. Fording | % of Distance | Trace | Approx. 3-5 Km/h |
| h. Average Speed | Km/h | 30 | |
| i. Max Speed | Km/h | 110 | Pass or Downhill dash |
| j. Hard Breaking | Times per Mission (Deceleration of at least 3.5 Km/h) | 25 | |
| k. Hard Acceleration | Times per Mission (Acceleration of at least 1 Km/h) | 25 | |
| l. Camouflage Trailer | Times per Mission | 1 | 2 Pers climbing on Trailer |

Table 1. WTT Duty Cycle

## A2.5 Unusual and severe conditions

A2.5.1 The WTT is expected to operate in any environment and experiencing temperatures from -40$^0$C, to 49$^0$C. Light vegetation is described as small trees/brush with a stem diameter less than or equal to 25 mm in diameter at breast height. Specific activities such as camouflaging vehicles occur more frequently during exercises.

A2.5.2 The WTT, while driving at cross-country speeds and loaded with water to the GTW, must remain stable while being towed on a traverse, with intermittent stops, on a 30% side slope in a controlled manner, in both forward directions; driver side up the slope and driver side down the slope.

## A2.6 Key Roles and Tasks

A2.6.1 The WTT will be the intrinsic water supply capability for land based units and formations. The WTT fleet will be used for the Transportation of water for Close support resupply as well as General support resupply;

## A2.7 Life Cycle

A2.7.1 The WTT expected average annual usage is 2,500 km.

A2.7.2 The WTT expected lifetime usage is 50,000 km.

A2.7.3 The WTT expected life is 20 yrs.

# A3.0 APPENDIX: CONTRACT DATA REQUIREMENTS LIST

## A3.1 CDRL Item List

| CDRL # | Title | DID # |
|---|---|---|
| WTT-PM-001 | Project Management Plan | WTT-PM-001 |
| WTT-PM-002 | Meeting Agenda | WTT-PM-002 |
| WTT-PM-003 | Meeting Minutes | WTT-PM-003 |
| WTT-SE-101 | First Article Acceptance Plan | WTT-SE-101 |
| WTT-SE-102 | Top Level Assembly Drawings | WTT-SE-102 |
| WTT-SE-103 | Acceptance Test Report (ATR) | WTT-SE-103 |
| WTT-ILS-201 | Operator Manual | WTT-ILS-201 |
| WTT-ILS-202 | Repair Manual | WTT-ILS-202 |
| WTT-ILS-203 | Permissive Repair Schedule and Standard Repair Times | WTT-ILS-203 |
| WTT-ILS-204 | Illustrated Parts Manual | WTT-ILS-204 |
| WTT-ILS-205 | Operator Training Package | WTT-ILS-205 |
| WTT-ILS-206 | Preservation, Storage and Reactivation Instructions | WTT-ILS-206 |
| WTT-ILS-207 | Stowage, Shipping, and Handling Instructions | WTT-ILS-207 |
| WTT-ILS-208 | Equipment Data Summary | WTT-ILS-208 |
| WTT-ILS-209 | Provisioning Parts Breakdown | WTT-ILS-209 |
| WTT-ILS-210 | Supplementary Provisioning Technical Documentation | WTT-ILS-210 |
| WTT-ILS-211 | Identification Plates | WTT-ILS-211 |
| WTT-ILS-212 | Controlled & Non-Controlled Goods List | WTT-ILS-212 |
| WTT-ILS-213 | Identification Labels for Storage and Shipment, and Packaging Codes | WTT-ILS-213 |
| WTT-ILS-214 | Repair and Overhaul Plan | WTT-ILS-214 |
| WTT-ILS-215 | Warranty Support Plan | WTT-ILS-215 |
| WTT-ILS-216 | Contract Delivery Status Report – Spares | WTT-ILS-216 |
| WTT-ILS-217 | Contract Delivery Status Report – WTT | WTT-ILS-217 |

## A3.2 CDRL Table Definitions

The following section defines the various blocks of information found on the CDRL forms:

**BLOCK 1 – SYSTEM / ITEM**
Provides the name of the System or Item for which the CDRL applies.

**BLOCK 2 – ITEM NUMBER**
The Item Number is a sequential three-digit number to uniquely identify the individual data item (CDRL number). Note that the 001-099 series is reserved to Project Management (PM) CDRLs, the 101-199 series is reserved to Systems Engineering (SE) CDRLs and the 201-299 series is reserved to Integrated Logistics Support (ILS) CDRLs.

**BLOCK 3 - TITLE OR DESCRIPTION OF DATA**
The title of the data item being referred to in this CDRL.

**BLOCK 4 - AUTHORITY (DATA ITEM NUMBER)**
Indicates the Data Item Description (DID) number to which this CDRL refers.

**BLOCK 5 - CONTRACT REFERENCE**
The specific paragraph number of the Contract Demand, Statement of Work, Request for Proposal, Specification, or other applicable document to assist in identifying the work effort associated with the data item.

**BLOCK 6 - FREQUENCY**
This block indicates the frequency of the delivered data. The following frequency codes are used:

| | |
|---|---|
| ANNLY | Annually |
| ASGEN | As generated |
| ASREQ | As required |
| BI-MO | Every 2 months |
| BI-WK | Every2 weeks |
| DAILY | Daily |
| MNTHY | Monthly |
| ONE/R | One time with revisions |
| OTIME | One time |
| QRTLY | Quarterly |
| R/ASR | Revisions as required |
| SEMIA | Semi-annually |
| WKLY | Weekly |

**BLOCK 7 – REQUIRING OFFICE**
Identifies the technical office of primary interest responsible for defining the data requirement, reviewing, acceptance and approval of the data item, and ensuring the adequacy of the delivered data.

**BLOCK 8 – SUBMISSION SCHEDULE**

**DATE OF 1ST SUBMISSION -** The initial submission date or associated constraint for the 1st submission of the data item is indicated in this block using typical abbreviations as listed above under Block 11.

**DATE OF SUBSEQUENT SUBMISSION / EVENT -** The date(s) of subsequent submission(s) or associated constraint(s) of the data item is indicated in this block.

**BLOCK 9 - DISTRIBUTION AND ADDRESSEES**
Indicates the addressees and the respective number of copies (hard copies and soft copies separately), for either the draft or first submissions (Sub-Block “Draft”), and for the final or subsequent submissions (Sub-Block “Final”), for which the data item is required.

**BLOCK 10 - TOTAL**
Indicates the total number of copies (hard copies and soft copies separately) required for both the original submission and for the final submission.

## A3.3 **CDRL – Project Management Plan**

| CONTRACT DATA REQUIREMENTS LIST | | |
|---|---|---|
| 1. SYSTEM / ITEM<br>Water Tank Trailer | | |
| 2. ITEM NUMBER<br>CDRL WTT-PM-001 | 3. TITLE OR DESCRIPTION OF DATA<br>Project Management Plan (PMP) | 4. AUTHORITY (Data Item Number)<br>DID WTT-PM-001 |
| 5. CONTRACT REFERENCE<br>SOW: **Para. 3.2.1 (pg. 10)**<br>DID: **App. A4.3 (pg. 64)** | 6. FREQUENCY<br>R/ASR | 7. REQUIRING OFFICE<br>DND PMO |

8. SUBMISSION SCHEDULE

**First Submission:** The Contractor must provide a draft PMP for review no later than 28 calendar days after the Kick-off Meeting.

**Response Time:** Comments on the draft PMP will be provided by Canada no later than 14 calendar days after receipt of the soft copy submission.

**Subsequent Submission(s):** The Contractor must provide a revised PMP, addressing Canada's comments, for review and possible acceptance no later than 14 calendar days after the receipt of Canada's comments.

**Response Time:** Comments or acceptance of the revised PMP will be provided by Canada no later than seven (7) calendar days after receipt of the soft copy submission.

9. DISTRIBUTION and ADDRESSEES

| A. ADDRESSEE | B. COPIES | | | |
|---|---|---|---|---|
| | DRAFT | | FINAL | |
| | Hard Copy | Soft Copy | Hard Copy | Soft Copy |
| DND TA | 0 | 1 | 0 | 1 |
| | | | | |
| | | | | |
| | | | | |
| | | | | |
| | | | | |
| | | | | |

## A3.4 **CDRL – Meeting Agenda**

| CONTRACT DATA REQUIREMENTS LIST | | |
|---|---|---|
| 1. SYSTEM / ITEM<br>Water Tank Trailer | | |
| 2. ITEM NUMBER<br>CDRL WTT-PM-002 | 3. TITLE OR DESCRIPTION OF DATA<br>Meeting Agenda | 4. AUTHORITY (Data Item Number)<br>DID WTT-PM-002 |
| 5. CONTRACT REFERENCE<br>SOW: **Para. 3.3.6.1.1 (pg. 11)**<br>DID: **App. A4.4 (pg. 66)** | 6. FREQUENCY<br>ASREQ | 7. REQUIRING OFFICE<br>DND PMO |

8. SUBMISSION SCHEDULE

**First Submission:** The Contractor must provide a draft Meeting Agenda for review no later than seven (7) calendar days prior to each meeting.

**Response Time:** Comments on the draft Meeting Agenda, and additions and deletions of discussion items, will be provided by Canada no later than five (5) calendar days after receipt of the soft copy submission.

**Subsequent Submission:** The Contractor must provide a revised Meeting Agenda, addressing Canada's comments, at the meeting, in soft copy submission one (1) calendar day before each meeting and in hard copy for the meeting.

9. DISTRIBUTION and ADDRESSEES

| A. ADDRESSEE | B. COPIES | | | |
|---|---|---|---|---|
| | DRAFT | | FINAL | |
| | Hard Copy | Soft Copy | Hard Copy | Soft Copy |
| PSPC CA | 0 | 1 | 0 | 1 |
| DND TA | 0 | 1 | 0 | 1 |
| DND PA | 0 | 1 | 0 | 1 |
| | | | | |
| | | | | |
| | | | | |
| | | | | |

## A3.5 **CDRL – Meeting Minutes**

| CONTRACT DATA REQUIREMENTS LIST | | |
|---|---|---|
| 1. SYSTEM / ITEM<br>Water Tank Trailer | | |
| 2. ITEM NUMBER<br>CDRL WTT-PM-003 | 3. TITLE OR DESCRIPTION OF DATA<br>Meeting Minutes | 4. AUTHORITY (Data Item Number)<br>DID WTT-PM-003 |
| 5. CONTRACT REFERENCE<br>SOW: **Para. 3.3.6.1.2 (pg. 11)**<br>DID: **App. A4.5 (pg. 67)** | 6. FREQUENCY<br>ASREQ | 7. REQUIRING OFFICE<br>DND PMO |

8. SUBMISSION SCHEDULE

**First Submission:** The Contractor must provide draft Meeting Minutes for review no later than seven (7) calendar days following each meeting.

**Response Time:** Comments on the draft Meeting Minutes will be provided by Canada no later than seven (7) calendar days after receipt of the soft copy submission.

**Subsequent Submission(s):** The Contractor must provide revised Meeting Minutes, addressing Canada's comments, for review and possible acceptance no later than seven (7) calendar days after receipt of Canada's comments.

**Response Time:** Comments or acceptance of the revised Meeting Minutes will be provided by Canada no later than seven (7) calendar days after receipt of the soft copy submission.

9. DISTRIBUTION and ADDRESSEES

| A. ADDRESSEE | B. COPIES | | | |
|---|---|---|---|---|
| | DRAFT | | FINAL | |
| | Hard Copy | Soft Copy | Hard Copy | Soft Copy |
| PSPC CA | 0 | 1 | 0 | 1 |
| DND TA | 0 | 1 | 0 | 1 |
| DND PA | 0 | 1 | 0 | 1 |
| | | | | |
| | | | | |
| | | | | |
| | | | | |

## A3.6 CDRL – First Article Acceptance Plan (FAAP)

| CONTRACT DATA REQUIREMENTS LIST | | |
|---|---|---|
| 1. SYSTEM / ITEM<br>Water Tank Trailer | | |
| 2. ITEM NUMBER<br>CDRL WTT-SE-101 | 3. TITLE OR DESCRIPTION OF DATA<br>First Article Acceptance Plan (FAAP) | 4. AUTHORITY (Data Item Number)<br>DID WTT-SE-101 |
| 5. CONTRACT REFERENCE<br>SOW: **Para.4.1.4 (pg. 13)**<br>DID: **App. A4.6 (pg. 68)** | 6. FREQUENCY<br>ONE/R | 7. REQUIRING OFFICE<br>DND PMO |

8. SUBMISSION SCHEDULE

**First Submission:** The Contractor must provide a draft First Article Acceptance Plan for review no later than 84 calendar days after KOM. The Draft FAAP will be reviewed at the CDR meeting.

**Response Time:** Comments on the draft FAAP will be provided by Canada no later than 14 calendar days after receipt of the soft copy submission.

**Final Submission:** The Contractor must review the FAAP comments from Canada, amend if required, and provide to Canada no less than 14 calendar days later.

**Response Time:** Comments on the revised FAAP will be provided by Canada no later than 14 calendar days after receipt of the Final submission soft copy.

9. DISTRIBUTION and ADDRESSEES

| A. ADDRESSEE | B. COPIES | | | |
|---|---|---|---|---|
| | DRAFT | | FINAL | |
| | Hard Copy | Soft Copy | Hard Copy | Soft Copy |
| DND TA | 0 | 1 | 0 | 1 |
| | | | | |
| | | | | |
| | | | | |
| | | | | |
| | | | | |
| | | | | |

## A3.7 **CDRL – Top Level Assembly Drawings**

| CONTRACT DATA REQUIREMENTS LIST | | |
|---|---|---|
| 1. SYSTEM / ITEM<br>Water Tank Trailer | | |
| 2. ITEM NUMBER<br>CDRL WTT- SE-102 | 3. TITLE OR DESCRIPTION OF DATA<br>Top Level Assembly Drawings (TLAD) | 4. AUTHORITY (Data Item Number)<br>DID WTT- SE-102 |
| 5. CONTRACT REFERENCE<br>SOW: **Para. 3.3.2.2 (pg. 10)**<br>DID: **App. A4.7 (pg. 70)** | 6. FREQUENCY<br>ASREQ | 7. REQUIRING OFFICE<br>DND ILS Manager |

8. SUBMISSION SCHEDULE

**First Submission:** The Contractor must provide draft Top Level Assembly Drawings (TLAD) for review by Canada during the Kick-Off Meeting.

**Response Time:** Comments on the TLAD will be provided by Canada no later than seven (7) calendar days after receipt of the hard and soft copy submission.

**Subsequent Submission(s):** The Contractor must provide a revised TLAD addressing Canada's comments, for review and possible acceptance no later than seven (7) days after the receipt of Canada's comments.

**Response Time:** Comments or acceptance on the revised TLAD will be provided by Canada no later than seven (7) calendar days after receipt of the hard and soft copy submission.

9. DISTRIBUTION and ADDRESSEES

| A. ADDRESSEE | B. COPIES | | | |
|---|---|---|---|---|
| | DRAFT | | FINAL | |
| | Hard Copy | Soft Copy | Hard Copy | Soft Copy |
| DND ILSM | 1 | 1 | 1 | 1 |
| DND TA | 1 | 1 | 1 | 1 |
| | | | | |
| | | | | |
| | | | | |
| | | | | |
| | | | | |

## A3.8 **CDRL – Acceptance Test Report (ATR)**

| CONTRACT DATA REQUIREMENTS LIST | | |
|---|---|---|
| 1. SYSTEM / ITEM<br>Water Tank Trailer | | |
| 2. ITEM NUMBER<br>CDRL WTT-SE-103 | 3. TITLE OR DESCRIPTION OF DATA<br>Acceptance Test Report | 4. AUTHORITY (Data Item Number)<br>DID WTT-SE-103 |
| 5. CONTRACT REFERENCE<br>SOW: para. 4.1.6 (pg.13)<br>DID: App. A4.8 (pg. 72) | 6. FREQUENCY<br>ASGEN | 7. REQUIRING OFFICE<br>DND PMO |

8. SUBMISSION SCHEDULE

**First Submission:** The Contractor must provide each draft Acceptance Test Report for review no later than twenty one (21) calendar days following the completion of each Test.

**Response Time:** Comments on the draft Acceptance Test Report will be provided by Canada no later than seven (7) calendar days after receipt of the soft copy submission.

**Subsequent Submission(s):** The Contractor must provide revised Acceptance Test Report addressing Canada's comments, for review and possible acceptance no later than seven (7) calendar days after receipt of Canada's comments.

**Response Time:** Comments or acceptance of the revised Acceptance Test Report will be provided by Canada no later than seven (7) calendar days after receipt of the soft copy submission.

9. DISTRIBUTION and ADDRESSEES

| A. ADDRESSEE | B. COPIES | | | |
|---|---|---|---|---|
| | DRAFT | | FINAL | |
| | Hard Copy | Soft Copy | Hard Copy | Soft Copy |
| DND TA | 0 | 1 | 0 | 1 |
| | | | | |
| | | | | |
| | | | | |
| | | | | |
| | | | | |

## A3.9 **CDRL – Operator Manual**

| **CONTRACT DATA REQUIREMENTS LIST** | | |
|---|---|---|
| 1. SYSTEM / ITEM<br>Water Tank Trailer | | |
| 2. ITEM NUMBER<br>CDRL WTT-ILS-201 | 3. TITLE OR DESCRIPTION OF DATA<br>Operator Manual | 4. AUTHORITY (Data Item Number)<br>DID WTT-ILS-201 |
| 5. CONTRACT REFERENCE<br>SOW: **Para. 5.3.1.1.1 (pg. 14)**<br>DID: **App. A4.9 (pg.74)** | 6. FREQUENCY<br>ONE/R | 7. REQUIRING OFFICE<br>DND ILS Manager |

8. SUBMISSION SCHEDULE

**First Submission (English):** The Contractor must provide a draft English Operator Manual for review by Canada when delivering the first two (2) WTT units for AT.

**Response Time:** Comments on the draft English Operator Manual will be provided by Canada no later than 21 days after receipt of the hard copy submission.

**Subsequent Submission(s) (English):** The Contractor must provide a revised English Operator Manual, addressing Canada's comments, for review and possible acceptance no later than 28 days after the receipt of Canada's comments.

**Response Time:** Comments or acceptance of the revised English Operator Manual will be provided by Canada no later than 21 days after receipt of the hard copy submission.

**First Submission (Bilingual):** The Contractor must provide a draft Bilingual Operator Manual for review by Canada no later than 49 days after the acceptance of the English Operator Manual.

**Response Time:** Comments on the draft Bilingual Operator Manual will be provided by Canada no later than 21 after receipt of the hard copy submission.

**Subsequent Submission(s) (Bilingual):** The Contractor must provide a revised Bilingual Operator Manual, addressing Canada's comments, for review and possible acceptance no later than 21 after the receipt of Canada's comments.

**Response Time:** Comments or acceptance of the revised Bilingual Operator Manual will be provided by Canada no later than 14 after receipt of the hard copy submission.

9. DISTRIBUTION and ADDRESSEES

| A. ADDRESSEE | B. COPIES | | | |
|---|---|---|---|---|
| | DRAFT | | FINAL | |
| | Hard Copy | Soft Copy | Hard Copy | Soft Copy |
| DND ILSM | 1 | 1 | 1 | 1 |
| Issued with each WTT | | | 1 | |
| | | | | |
| | | | | |
| | | | | |
| | | | | |
| | | | | |
| | | | | |
| | | | | |
| | | | | |
| | | | | |
| | | | | |
| | | | | |
| | | | | |
| | | | | |
| | | | | |
| | | | | |

## A3.10 **CDRL – Repair Manual**

| **CONTRACT DATA REQUIREMENTS LIST** | | |
|---|---|---|
| 1. SYSTEM / ITEM<br>Water Tank Trailer | | |
| 2. ITEM NUMBER<br>CDRL WTT-ILS-202 | 3. TITLE OR DESCRIPTION OF DATA<br>Repair Manual | 4. AUTHORITY (Data Item Number)<br>DID WTT-ILS-202 |
| 5. CONTRACT REFERENCE<br>SOW **Para. 5.3.1.2.1 (pg. 14)**<br>DID: **App. A4.10 (pg. 76)** | 6. FREQUENCY<br>ONE/R | 7. REQUIRING OFFICE<br>DND ILS Manager |

8. SUBMISSION SCHEDULE

**First Submission (English):** The Contractor must provide a draft English Repair Manual for review by Canada when delivering the first three (2) WTT units for AT.

**Response Time:** Comments on the draft English Repair Manual will be provided by Canada no later than 28 days after receipt of the hard copy submission.

**Subsequent Submission(s) (English):** The Contractor must provide a revised English Repair Manual, addressing Canada's comments, for review and possible acceptance no later than 28 days after the receipt of Canada's comments.

**Response Time:** Comments or acceptance of the revised English Repair Manual will be provided by Canada no later than 21 days after receipt of the hard copy submission.

**First Submission (Bilingual):** The Contractor must provide a draft Bilingual Repair Manual for review by Canada no later than 56 days after the acceptance of the English Repair Manual.

**Response Time:** Comments on the draft Bilingual Repair Manual will be provided by Canada no later than 28 days after receipt of the hard copy submission.

**Subsequent Submission(s) (Bilingual):** The Contractor must provide a revised Bilingual Repair Manual, addressing Canada's comments, for review and possible acceptance no later than 21 days after the receipt of Canada's comments.

**Response Time:** Comments or acceptance of the revised Bilingual Repair Manual will be provided by Canada no later than 21 days after receipt of the hard copy submission.

9. DISTRIBUTION and ADDRESSEES

| A. ADDRESSEE | B. COPIES | | | |
|---|---|---|---|---|
| | DRAFT | | FINAL | |
| | Hard Copy | Soft Copy | Hard Copy | Soft Copy |
| DND ILSM | 1 | 1 | 2 | 1 |

## A3.11 **CDRL – Permissive Repair Schedule and Standard Repair Times**

| **CONTRACT DATA REQUIREMENTS LIST** | | |
|---|---|---|
| 1. SYSTEM / ITEM<br>Water Tank Trailer | | |
| 2. ITEM NUMBER<br>CDRL WTT-ILS-203 | 3. TITLE OR DESCRIPTION OF DATA<br>Permissive Repair Schedule and Standard Repair Times | 4. AUTHORITY (Data Item Number)<br>DID WTT-ILS-203 |
| 5. CONTRACT REFERENCE<br>SOW **Para. 5.3.1.3.1 (pg. 15)**<br>DID: **App. A4.11 (pg. 78)** | 6. FREQUENCY<br>ONE/R | 7. REQUIRING OFFICE<br>DND ILS Manager |

8. SUBMISSION SCHEDULE

**First Submission (English):** The Contractor must provide a draft English Permissive Repair Schedule and Standard Repair Times (PRS/SRT) manual for review by Canada at the same time as the submission of the draft English Repair Manual.

**Response Time:** Comments on the draft English PRS/SRT manual will be provided by Canada along with those against the draft English Repair Manual.

**Subsequent Submission(s) English:** The Contractor must provide a revised English PRS/SRT manual, addressing Canada's comments, for review and possible acceptance at the same time as they provide a revised English Repair Manual, or no later than 21 days after the receipt of Canada's comments if no new submission of the English Repair Manual is required.

**Response Time:** Comments or acceptance of the revised English PRS/SRT manual will be provided by Canada along with those against the revised English Repair Manual, or no later than 14 days after receipt of the hard copy submission if the English Repair Manual has been previously accepted.

**First Submission (Bilingual):** The Contractor must provide a draft Bilingual PRS/SRT manual for review by Canada at the same time as the submission of the draft Bilingual Repair Manual.

**Response Time:** Comments on the draft Bilingual PRS/SRT manual will be provided by Canada along with those against the draft Bilingual Repair Manual.

**Subsequent Submission(s) (Bilingual):** The Contractor must provide a revised Bilingual PRS/SRT manual, addressing Canada's comments, for review and possible acceptance at the same time as they provide a revised Bilingual Repair Manual, or no later than 21 days after the receipt of Canada's comments if no new submission of the Bilingual Repair Manual is required.

**Response Time:** Comments or acceptance of the revised Bilingual PRS/SRT will be provided by Canada along with those against the revised Bilingual Repair Manual, or no later than 14 days after receipt of the hard copy submission if the Bilingual Repair Manual has been previously accepted.

9. DISTRIBUTION and ADDRESSEES

| A. ADDRESSEE | B. COPIES | | | |
|---|---|---|---|---|
| | DRAFT | | FINAL | |
| | Hard Copy | Soft Copy | Hard Copy | Soft Copy |
| DND ILSM | 1 | 1 | 2 | 1 |
| | | | | |
| | | | | |
| | | | | |
| | | | | |
| | | | | |
| | | | | |

## A3.12 **CDRL – Illustrated Parts Manual**

| CONTRACT DATA REQUIREMENTS LIST | | |
|---|---|---|
| 1. SYSTEM / ITEM<br>Water Tank Trailer | | |
| 2. ITEM NUMBER<br>CDRL WTT-ILS-204 | 3. TITLE OR DESCRIPTION OF DATA<br>Illustrated Parts Manual | 4. AUTHORITY (Data Item Number)<br>DID WTT-ILS-204 |
| 5. CONTRACT REFERENCE<br>SOW **Para. 5.3.1.4.1 (pg. 15)**<br>DID: **App. A4.12 (pg. 80)** | 6. FREQUENCY<br>ONE/R | 7. REQUIRING OFFICE<br>DND ILS Manager |

8. SUBMISSION SCHEDULE

**First Submission:** The Contractor must provide a draft Illustrated Parts Manual for review by Canada no later than 42 days after Design Acceptance.

**Response Time:** Comments on the draft Illustrated Parts Manual will be provided by Canada no later than 28 days after receipt of the hard copy submission.

**Subsequent Submission(s):** The Contractor must provide a revised Illustrated Parts Manual, addressing Canada's comments, for review and possible acceptance no later than 28 days after the receipt of Canada's comments.

**Resonse Time:** Comments or acceptance of the revised Illustrated Parts Manual will be provided by Canada no later than 21 after receipt of the hard copy submission.

**Note:** The Contractor must provide a subsequent submission of the Illustrated Parts Manual if additional revisions or additions are required after completion of the IPC, at which point the review cycles will follow the schedule for **Subsequent Submission(s)**.

9. DISTRIBUTION and ADDRESSEES

| A. ADDRESSEE | B. COPIES | | | |
|---|---|---|---|---|
| | DRAFT | | FINAL | |
| | Hard Copy | Soft Copy | Hard Copy | Soft Copy |
| DND ILSM | 1 | 1 | 3 | 1 |
| | | | | |
| | | | | |
| | | | | |
| | | | | |
| | | | | |
| | | | | |

## A3.13 **CDRL – Operator Training Package**

| CONTRACT DATA REQUIREMENTS LIST | | |
|---|---|---|
| 1. SYSTEM / ITEM<br>Water Tank Trailer | | |
| 2. ITEM NUMBER<br>CDRL WTT-ILS-205 | 3. TITLE OR DESCRIPTION OF DATA<br>Operator Training Package | 4. AUTHORITY (Data Item Number)<br>DID WTT-ILS-205 |
| 5. CONTRACT REFERENCE<br>SOW: **Para. 5.3.1.5.1 (pg. 15)**<br>DID: **App. A4.13 (pg. 82)** | 6. FREQUENCY<br>ONE/R | 7. REQUIRING OFFICE<br>DND ILS Manager |

8. SUBMISSION SCHEDULE

**First Submission (English):** The Contractor must provide a draft English Operator Training Package for review by Canada no later than 35 days following the acceptance of the English version of the Operator Manual.

**Response Time:** Comments on the draft English Operator Training Package will be provided by Canada no later than 21 days after receipt of the hard copy submission.

**Subsequent Submission(s) (English):** The Contractor must provide a revised English Operator Training Package, addressing Canada's comments, for review and possible acceptance no later than 21 after the receipt of Canada's comments.

**Response Time:** Comments or acceptance of the revised English Operator Training Package will be provided by Canada no later than 14 calendar days after receipt of the hard copy submission.

**First Submission (Bilingual):** The Contractor must provide a draft Bilingual Operator Training Package for review by Canada no later than 42 days after the acceptance of the Bilingual Operator Manual or the English Operator Training Package, whichever was accepted later.

**Response Time:** Comments on the draft Bilingual Operator Training Package will be provided by Canada no later than 21 days after receipt of the hard copy submission.

**Subsequent Submission(s) (Bilingual):** The Contractor must provide a revised Bilingual Operator Training Package, addressing Canada's comments, for review and possible acceptance no later than 21 days after the receipt of Canada's comments.

**Response Time:** Comments or acceptance of the revised Bilingual Operator Training Package will be provided by Canada no later than 14 days after receipt of the hard copy submission.

9. DISTRIBUTION and ADDRESSEES

| A. ADDRESS | B. COPIES | | | |
|---|---|---|---|---|
| | DRAFT | | FINAL | |
| | Hard Copy | Soft Copy | Hard Copy | Soft Copy |
| DND ILSM | 1 | 1 | | |
| Issued to Units by ILSM | | | | 75 |
| | | | | |
| | | | | |
| | | | | |
| | | | | |
| | | | | |

## A3.14 **CDRL – Preservation, Storage and Reactivation Instructions**

| CONTRACT DATA REQUIREMENTS LIST | | |
|---|---|---|
| 1. SYSTEM / ITEM<br>Water Tank Trailer | | |
| 2. ITEM NUMBER<br>CDRL WTT-ILS-206 | 3. TITLE OR DESCRIPTION OF DATA<br>Preservation, Storage and Reactivation Instructions | 4. AUTHORITY (Data Item Number)<br>DID WTT-ILS-206 |
| 5. CONTRACT REFERENCE<br>SOW: **Para. 5.3.1.6.1 (pg. 15)**<br>DID: **App. A4.14 (pg. 84)** | 6. FREQUENCY<br>ONE/R | 7. REQUIRING OFFICE<br>DND ILS Manager |

8. SUBMISSION SCHEDULE

**First Submission (English):** The Contractor must provide a draft English Preservation, Storage and Reactivation Instructions for review by Canada when delivering the first three (2) WTT units for AT.

**Response Time:** Comments on the draft English Preservation, Storage and Reactivation Instructions will be provided by Canada no later than 21 days after receipt of the hard copy submission.

**Subsequent Submission(s) (English):** The Contractor must provide a revised English Preservation, Storage and Reactivation Instructions, addressing Canada's comments, for review and possible acceptance no later than 28 days after the receipt of Canada's comments.

**Response Time:** Comments or acceptance of the revised English Preservation, Storage and Reactivation Instructions will be provided by Canada no later than 21 days after receipt of the hard copy submission.

**First Submission (Bilingual):** The Contractor must provide a draft Bilingual Preservation, Storage and Reactivation Instructions for review by Canada no later than 42 days after the acceptance of the English Preservation, Storage and Reactivation Instructions.

**Response Time:** Comments on the draft Bilingual Preservation, Storage and Reactivation Instructions will be provided by Canada no later than 21 days after receipt of the hard copy submission.

**Subsequent Submission(s) (Bilingual):** The Contractor must provide a revised Bilingual Preservation, Storage and Reactivation Instructions, addressing Canada's comments, for review and possible acceptance no later than 28 days after the receipt of Canada's comments.

**Response Time:** Comments or acceptance of the revised Bilingual Preservation, Storage and Reactivation Instructions will be provided by Canada no later than 14 days after receipt of the hard copy submission.

9. DISTRIBUTION and ADDRESSEES

| A. ADDRESSEE | B. COPIES | | | |
|---|---|---|---|---|
| | DRAFT | | FINAL | |
| | Hard Copy | Soft Copy | Hard Copy | Soft Copy |
| DND ILSM | 1 | 1 | 1 | 1 |
| | | | | |
| | | | | |
| | | | | |
| | | | | |
| | | | | |
| | | | | |

## A3.15 **CDRL – Stowage, Shipping and Handling Instructions**

| **CONTRACT DATA REQUIREMENTS LIST** | | |
|---|---|---|
| 1. SYSTEM / ITEM<br>Water Tank Trailer | | |
| 2. ITEM NUMBER<br>CDRL WTT-ILS-207 | 3. TITLE OR DESCRIPTION OF DATA<br>Stowage, Shipping and Handling Instructions | 4. AUTHORITY (Data Item Number)<br>DID WTT-ILS-207 |
| 5. CONTRACT REFERENCE<br>SOW: **Para. 5.3.1.7.1 (pg. 15)**<br>DID: **App. A4.15 (pg. 86)** | 6. FREQUENCY<br>ONE/R | 7. REQUIRING OFFICE<br>DND ILS Manager |

8. SUBMISSION SCHEDULE

**First Submission (English):** The Contractor must provide draft English Stowage, Shipping and Handling Instructions for review by Canada when delivering the first three (2) WTT units for AT.

**Response Time:** Comments on the draft English Stowage, Shipping and Handling Instructions will be provided by Canada no later than 21 days after receipt of the hard copy submission.

**Subsequent Submission(s) (English):** The Contractor must provide revised English Stowage, Shipping and Handling Instructions, addressing Canada's comments, for review and possible acceptance no later than 28 days after the receipt of Canada's comments.

**Response Time:** Comments or acceptance of the revised English Stowage, Shipping and Handling Instructions will be provided by Canada no later than 21 days after receipt of the hard copy submission.

**First Submission (Bilingual):** The Contractor must provide draft Bilingual Stowage, Shipping and Handling Instructions for review by Canada no later than 42 after the acceptance of the English Stowage, Shipping and Handling Instructions.

**Response Time:** Comments on the draft Bilingual Stowage, Shipping and Handling Instructions will be provided by Canada no later than 21 days after receipt of the hard copy submission.

**Subsequent Submission(s) (Bilingual):** The Contractor must provide revised Bilingual Stowage, Shipping and Handling Instructions, addressing Canada's comments, for review and possible acceptance no later than 28 days after the receipt of Canada's comments.

**Response Time:** Comments or acceptance of the revised Bilingual Stowage, Shipping and Handling Instructions will be provided by Canada no later than 14 days after receipt of the hard copy submission.

9. DISTRIBUTION and ADDRESSEES

| A. ADDRESSEE | B. COPIES | | | |
|---|---|---|---|---|
| | DRAFT | | FINAL | |
| | Hard Copy | Soft Copy | Hard Copy | Soft Copy |
| DND ILSM | 1 | 1 | 1 | 1 |
| | | | | |
| | | | | |
| | | | | |
| | | | | |
| | | | | |
| | | | | |

## A3.16 **CDRL – Equipment Data Summary**

| CONTRACT DATA REQUIREMENTS LIST | | |
|---|---|---|
| 1. SYSTEM / ITEM<br>Water Tank Trailer | | |
| 2. ITEM NUMBER<br>CDRL WTT-ILS-208 | 3. TITLE OR DESCRIPTION OF DATA<br>Equipment Data Summary | 4. AUTHORITY (Data Item Number)<br>DID WTT-ILS-208 |
| 5. CONTRACT REFERENCE<br>SOW: **Para. 5.3.1.8.1 (pg. 15)**<br>DID: **App. A4.16 (pg. 88)** | 6. FREQUENCY<br>ONE/R | 7. REQUIRING OFFICE<br>DND ILS Manager |

8. SUBMISSION SCHEDULE

**First Submission (English):** The Contractor must provide a draft English Equipment Data Summary for review by Canada when delivering the first three (2) WTT units for AT.

**Response Time:** Comments on the draft English Equipment Data Summary will be provided by Canada no later than 21 days after receipt of the hard copy submission.

**Subsequent Submission(s) (English):** The Contractor must provide a revised English Equipment Data Summary, addressing Canada's comments, for review and possible acceptance no later than 14 days after the receipt of Canada's comments.

**Response Time:** Comments or acceptance of the revised Equipment Data Summary will be provided by Canada no later than 14 days after receipt of the hard copy submission.

**First Submission (Bilingual):** The Contractor must provide a draft Bilingual Equipment Data Summary for review by Canada no later than 28 days after the acceptance of the English SMP Vehicle and Equipment Data Summary.

**Response Time:** Comments on the draft Bilingual Equipment Data Summary will be provided by Canada no later than 14 days after receipt of the hard copy submission.

**Subsequent Submission(s) (Bilingual):** The Contractor must provide a revised Bilingual Equipment Data Summary, addressing Canada's comments, for review and possible acceptance no later than 14 days after the receipt of Canada's comments.

**Response Time:** Comments or acceptance of the revised Bilingual Equipment Data Summary will be provided by Canada no later than 14 days after receipt of the hard copy submission.

9. DISTRIBUTION and ADDRESSEES

| A. ADDRESSEE | B. COPIES | | | |
|---|---|---|---|---|
| | DRAFT | | FINAL | |
| | Hard Copy | Soft Copy | Hard Copy | Soft Copy |
| DND ILSM | 1 | 1 | 1 | 1 |
| | | | | |
| | | | | |
| | | | | |
| | | | | |
| | | | | |
| | | | | |

## A3.17 **CDRL – Provisioning Parts Breakdown**

| **CONTRACT DATA REQUIREMENTS LIST** | | |
|---|---|---|
| 1. SYSTEM / ITEM<br>Water Tank Trailer | | |
| 2. ITEM NUMBER<br>CDRL WTT-ILS-209 | 3. TITLE OR DESCRIPTION OF DATA<br>Provisioning Parts Breakdown | 4. AUTHORITY (Data Item Number)<br>DID WTT-ILS-209 |
| 5. CONTRACT REFERENCE<br>SOW: **Para. 5.4.3.1.1 (pg. 17)**<br>DID: **App. A4.17 (pg. 90)** | 6. FREQUENCY<br>ONE/R | 7. REQUIRING OFFICE<br>DND ILS Manager |

8. SUBMISSION SCHEDULE

**First Submission:** The Contractor must provide a draft Provisioning Parts Breakdown for review by Canada at the same time as the draft Illustrated Parts Manual submission.

**Response Time:** Comments on the draft Provisioning Parts Breakdown will be provided by Canada no later than 28 days after receipt of the soft copy submission.

**Subsequent Submission(s):** The Contractor must provide a revised Provisioning Parts Breakdown, addressing Canada's comments, for review and possible acceptance no later than 28 days after receipt of Canada's comments.

**Response Time:** Comments or acceptance of the revised Provisioning Parts Breakdown will be provided by Canada no later than 14 days after receipt of the soft copy submission.

**Note:** The Contractor must provide a subsequent submission of the Provisioning Parts Breakdown if additional revisions or additions are required after completion of the IPC.

9. DISTRIBUTION and ADDRESSEES

| A. ADDRESSEE | B. COPIES | | | |
|---|---|---|---|---|
| | DRAFT | | FINAL | |
| | Hard Copy | Soft Copy | Hard Copy | Soft Copy |
| DND ILSM | 1 | 1 | 1 | 1 |
| | | | | |
| | | | | |
| | | | | |
| | | | | |
| | | | | |
| | | | | |

## A3.18 **CDRL – Supplementary Provisioning Technical Documentation**

| CONTRACT DATA REQUIREMENTS LIST | | |
|---|---|---|
| 1. SYSTEM / ITEM<br>Water Tank Trailer | | |
| 2. ITEM NUMBER<br>CDRL WTT-ILS-210 | 3. TITLE OR DESCRIPTION OF DATA<br>Supplementary Provisioning Technical Documentation | 4. AUTHORITY (Data Item Number)<br>DID WTT-ILS-210 |
| 5. CONTRACT REFERENCE<br>SOW: **Para. 5.4.3.2.1 (pg. 17)**<br>DID: **App. A4.18 (pg. 93)** | 6. FREQUENCY<br>ONE/R | 7. REQUIRING OFFICE<br>DND ILS Manager |

8. SUBMISSION SCHEDULE

**First Submission:** The Contractor must provide a draft Supplementary Provisioning Technical Documentation for review by Canada at the same time as the draft Illustrated Part Manual submission.

**Response Time:** Comments on the draft Supplementary Provisioning Technical Documentation will be provided by Canada no later than 28 days after receipt.

The Contractor must revise the draft Supplementary Provisioning Technical Documentation, addressing Canada's comments, and bring the revised Supplementary Provisioning Technical Documentation to the Initial Provisioning Conference.

**Subsequent Submission(s)** The Contractor must provide a revised Supplementary Provisioning Technical Documentation, addressing Canada's comments and changes resulting from decisions taken during the Initial Provisioning Conference, for review and possible acceptance no later than 14 days from the end date of the Initial Provisioning Conference.

**Response Time:** Comments or acceptance of the revised Supplementary Provisioning Technical Documentation will be provided by Canada no later than 14 days after receipt.

9. DISTRIBUTION and ADDRESSEES

| A. ADDRESSEE | B. COPIES | | | |
|---|---|---|---|---|
| | DRAFT | | FINAL | |
| | Hard Copy | Soft Copy | Hard Copy | Soft Copy |
| DND ILSM | 0 | 1 | 0 | 1 |
| | | | | |
| | | | | |
| | | | | |
| | | | | |
| | | | | |
| | | | | |

## A3.19 **CDRL – Identification Plates – Design Template & Populated Designs**

| **CONTRACT DATA REQUIREMENTS LIST** | | |
|---|---|---|
| 1. SYSTEM / ITEM<br>Water Tank Trailer | | |
| 2. ITEM NUMBER<br>CDRL WTT-ILS-211 | 3. TITLE OR DESCRIPTION OF DATA<br>Identification Plates – Design Template & Populated Designs | 4. AUTHORITY (Data Item Number)<br>DID WTT-ILS-211 |
| 5. CONTRACT REFERENCE<br>SOW: **Para. 5.6.1 (pg. 18)**<br>DID: **App. A4.19 (pg. 95)** | 6. FREQUENCY<br>ONE/R | 8. REQUIRING OFFICE<br>DND ILS Manager |

9. SUBMISSION SCHEDULE

**First Submission (Design Template):** The Contractor must provide a draft Identification Plates design template for review by Canada no later than 28 days following the Critical Design Review meeting.

**Response Time:** Comments on the draft Identification Plates design template will be provided by Canada no later than 21 days after receipt of the hard copy submission.

**Subsequent Submission(s) (Design Template):** The Contractor must provide a revised Identification Plates design template, addressing Canada's comments, for review and possible acceptance no later than 21 calendar days after the receipt of Canada's comments.

**Response Time:** Comments or acceptance of the revised Identification Plates design template will be provided by Canada no later than 14 calendar days after receipt of the hard copy submission.

**First Submission (Populated Designs):** The Contractor must provide all draft populated Identification Plate designs for review by Canada no later than 42 days after Design Acceptance of the WTT.

**Response Time:** Comments on the draft populated Identification Plate designs will be provided by Canada no later than 21 days after receipt of the hard copy submission.

**Subsequent Submission(s) (Populated Designs):** The Contractor must provide revised populated Identification Plate designs, addressing Canada's comments, for review and possible acceptance no later than 21 days after the receipt of Canada's comments.

**Response Time:** Comments or acceptance of the revised populated Identification Plate designs will be provided by Canada no later than 14 calendar days after receipt of the hard copy submission.

10. DISTRIBUTION and ADDRESSEES

| A. ADDRESSEE | B. COPIES | | | |
|---|---|---|---|---|
| | DRAFT | | FINAL | |
| | Hard Copy | Soft Copy | Hard Copy | Soft Copy |
| DND ILSM | 1 | 1 | 1 | 1 |
| | | | | |
| | | | | |
| | | | | |
| | | | | |
| | | | | |
| | | | | |

## A3.20 **CDRL – Controlled & Non-Controlled Goods List**

| CONTRACT DATA REQUIREMENTS LIST | | |
|---|---|---|
| 1. SYSTEM / ITEM<br>Water Tank Trailer | | |
| 2. ITEM NUMBER<br>CDRL WTT-ILS-212 | 3. TITLE OR DESCRIPTION OF DATA<br>Controlled & Non-Controlled Goods List (CNCGL) | 4. AUTHORITY (Data Item Number)<br>DID WTT-ILS-212 |
| 5. CONTRACT REFERENCE<br>SOW: **Para. 5.7.1 (pg19)**<br>DID: **App. A4.20 (pg. 97)** | 6. FREQUENCY<br>ONE/R | 7. REQUIRING OFFICE<br>DND ILS Manager |

8. SUBMISSION SCHEDULE

**First Submission:** The Contractor must provide a draft CNCGL for review by Canada at the same time as the draft Provisioning Parts Breakdown submission.

**Response Time:** Comments on the draft CNCGL will be provided by Canada no later than 21 calendar days after receipt of the soft copy submission.

**Subsequent Submission(s)** The Contractor must provide a revised CNCGL, addressing Canada's comments, for review and possible acceptance no later than 21 calendar days after receipt of Canada's comments.

**Response Time:** Comments or acceptance of the revised CNCGL will be provided by Canada no later than 21 calendar days after receipt of the soft copy submission.

9. DISTRIBUTION and ADDRESSEES

| A. ADDRESSEE | B. COPIES | | | |
|---|---|---|---|---|
| | DRAFT | | FINAL | |
| | Hard Copy | Soft Copy | Hard Copy | Soft Copy |
| DND ILSM | 0 | 1 | 1 | 1 |
| | | | | |
| | | | | |
| | | | | |
| | | | | |
| | | | | |

## A3.21 **CDRL – Identification Labels for Storage and Shipment, and Packaging Codes**

| CONTRACT DATA REQUIREMENTS LIST | | |
|---|---|---|
| 1. SYSTEM / ITEM<br>Water Tank Trailer | | |
| 2. ITEM NUMBER<br>CDRL WTT-ILS-213 | 3. TITLE OR DESCRIPTION OF DATA<br>Identification Labels for Storage and Shipment, and Packaging Codes | 4. AUTHORITY (Data Item Number)<br>DID WTT-ILS-213 |
| 5. CONTRACT REFERENCE<br>SOW: **Para. 5.8.3 (pg. 19)**<br>DID: **App. A4.21 (pg. 99)** | 6. FREQUENCY<br>ONE/R | 7. REQUIRING OFFICE<br>DND ILS Manager |

8. SUBMISSION SCHEDULE

**First Submission (Labels):** The Contractor must provide draft Identification Labels for Storage & Shipment (ILSS) designs for review by Canada no later than 28 days following the close of the IPC.

**Response Time:** Comments on the draft ILSS Template will be provided by Canada no later than 14 calendar days after receipt of the soft copy submission.

**Subsequent Submission(s):** The Contractor must provide a revised ILSS Template, addressing Canada's comments, for review and possible acceptance no later than 14 calendar days after receipt of Canada's comments.

**Response Time:** Comments or acceptance of the ILSS Template will be provided by Canada no later than 14 calendar days after receipt of the soft copy submission.

**First Submission (Codes (CF271)):**The Contractor must provide draft CF271 forms for review by Canada no later than 35 days after Canada provides to the Contractor the item's NATO Stock Number.

**Response Time:** Comments on the draft CF271 forms will be provided by Canada no later than 21 calendar days after receipt of the soft copy submission.

**Subsequent Submission(s):** The Contractor must provide revised CF271 forms, addressing Canada's comments, for review and possible acceptance no later than 14 calendar days after receipt of Canada's comments.

**Response Time:** Comments or acceptance of the revised CF271 forms will be provided by Canada no later than 14 calendar days after receipt of the soft copy submission.

9. DISTRIBUTION and ADDRESSEES

| A. ADDRESSEE | B. COPIES | | | |
|---|---|---|---|---|
| | DRAFT | | FINAL | |
| | Hard Copy | Soft Copy | Hard Copy | Soft Copy |
| DND ILSM (Labels) | 0 | 1 | 0 | 1 |
| DND ILSM (CF271) | 0 | 1 | 0 | 1 |
| | | | | |
| | | | | |
| | | | | |
| | | | | |
| | | | | |

## A3.22 **CDRL – Repair & Overhaul Plan**

| CONTRACT DATA REQUIREMENTS LIST | | |
|---|---|---|
| 1. SYSTEM / ITEM<br>Water Tank Trailer | | |
| 2. ITEM NUMBER<br>CDRL WTT-ILS-214 | 3. TITLE OR DESCRIPTION OF DATA<br>Repair and Overhaul Plan | 4. AUTHORITY (Data Item Number)<br>DID WTT-ILS-214 |
| 5. CONTRACT REFERENCE<br>SOW: **Para. 5.9.1 (pg. 19)**<br>DID: **App. A4.22 (pg. 102)** | 6. FREQUENCY<br>ONE/R | 7. REQUIRING OFFICE<br>DND ILS Manager |

8. SUBMISSION SCHEDULE

**First Submission:** The Contractor must provide a draft Repair and Overhaul Plan for review by Canada no later than 42 days after the acceptance of the English Repair Manual.

**Response Time:** Comments on the draft Repair and Overhaul Plan will be provided by Canada no later than 28 calendar days after receipt of the soft copy submission.

**Subsequent Submission(s):** The Contractor must provide a revised Repair and Overhaul Plan, addressing Canada's comments, for review and possible acceptance no later than 21 calendar days after receipt of Canada's comments.

**Response Time:** Comments or acceptance of the revised Repair and Overhaul Plan will be provided by Canada no later than 21 calendar days after receipt of the soft copy submission.

9. DISTRIBUTION and ADDRESSEES

| A. ADDRESSEE | B. COPIES | | | |
|---|---|---|---|---|
| | DRAFT | | FINAL | |
| | Hard Copy | Soft Copy | Hard Copy | Soft Copy |
| DND ILSM | 0 | 1 | 1 | 1 |
| | | | | |
| | | | | |
| | | | | |
| | | | | |
| | | | | |
| | | | | |

## A3.23 **CDRL – Warranty Support Plan**

| CONTRACT DATA REQUIREMENTS LIST | | |
|---|---|---|
| 1. SYSTEM / ITEM<br>Water Tank Trailer | | |
| 2. ITEM NUMBER<br>CDRL WTT-ILS-215 | 3. TITLE OR DESCRIPTION OF DATA<br>Warranty Support Plan | 4. AUTHORITY (Data Item Number)<br>DID WTT-ILS-215 |
| 5. CONTRACT REFERENCE<br>SOW: **Para. 5.10.1 (pg. 19)**<br>DID: **App. A4.23 (pg. 103)** | 6. FREQUENCY<br>ONE/R | 7. REQUIRING OFFICE<br>DND ILS Manager |

8. SUBMISSION SCHEDULE

**First Submission:** The Contractor must provide a draft Warranty Support Plan for review by Canada no later than 49 calendar days following the kick-off meeting.

**Response Time:** Comments on the draft Warranty Support Plan will be provided by Canada no later than 28 calendar days after receipt of the soft copy submission.

**Subsequent Submission(s):** The Contractor must provide a revised Warranty Support Plan, addressing Canada's comments, for review and possible acceptance no later than 28 calendar days after receipt of Canada's comments.

**Response Time:** Comments or acceptance of the revised Warranty Support Plan will be provided by Canada no later than 21 calendar days after receipt of the soft copy submission.

9. DISTRIBUTION and ADDRESSEES

| A. ADDRESSEE | B. COPIES | | | |
|---|---|---|---|---|
| | DRAFT | | FINAL | |
| | Hard Copy | Soft Copy | Hard Copy | Soft Copy |
| DND ILSM | 0 | 1 | 1 | 1 |
| | | | | |
| | | | | |
| | | | | |
| | | | | |
| | | | | |
| | | | | |

## A3.24 **CDRL – Contract Delivery Status Report - Spares**

| CONTRACT DATA REQUIREMENTS LIST | | |
|---|---|---|
| 1. SYSTEM / ITEM<br>Water Tank Trailer | | |
| 2. ITEM NUMBER<br>CDRL WTT-ILS-216 | 3. TITLE OR DESCRIPTION OF DATA<br>Contractor Delivery Status Report - Spares (CDSR-S) | 4. AUTHORITY (Data Item Number)<br>DID WTT-ILS-216 |
| 5. CONTRACT REFERENCE<br>SOW: **Para. 5.4.3.3 (pg. 18)**<br>DID: **App. A4.24 (pg. 105)** | 6. FREQUENCY<br>MNTHY | 7. REQUIRING OFFICE<br>DND ILS Manager |

8. SUBMISSION SCHEDULE

**First Submissions:** The Contractor must provide a CDSR-S for review by Canada no later than 28 calendar days following the issuance of a spare parts order via DND626 form. Each DND626 order must have their own CDSR-S.

**Response Time:** Comments on the CDSR-S will be provided by Canada no later than 14 calendar days after receipt of the soft copy submission.

**Subsequent Submission(s):** Updates to the CDSR-S, addressing Canada's comments as applicable, must be submitted as required, no later than 28 calendar days from previous submissions of a CDSR-S, until all quantities of items listed within the CDSR-S are confirmed delivered to their Canadian points of destination.

9. DISTRIBUTION and ADDRESSEES

| A. ADDRESSEE | B. COPIES ALL | |
|---|---|---|
| | Hard Copy | Soft Copy |
| DND ILSM | 0 | 1 |
| PSPC CA | 0 | 1 |
| DND PA | 0 | 1 |
| | | |
| | | |
| | | |
| | | |

## A3.25 **CDRL – Contract Delivery Status Report - WTT**

| CONTRACT DATA REQUIREMENTS LIST | | |
|---|---|---|
| 1. SYSTEM / ITEM<br>Water Tank Trailer | | |
| 2. ITEM NUMBER<br>CDRL WTT-ILS-217 | 3. TITLE OR DESCRIPTION OF DATA<br>Contract Delivery Status Report – WTT (CDSR-WTT) | 4. AUTHORITY (Data Item Number)<br>DID WTT-ILS-217 |
| 5. CONTRACT REFERENCE<br>SOW: **Para. 5.4.3.4.1 (pg. 18)**<br>DID: **App. A4.25 (pg. 107)** | 6. FREQUENCY<br>MNTHY | 7. REQUIRING OFFICE<br>DND PMO |

8. SUBMISSION SCHEDULE

**First Submission:** The Contractor must provide a CDSR-WTT for review by Canada no later than 28 days following the beginning of WTT production, and every 28 .

**Response Time:** Comments on the CDSR-WTT will be provided by Canada no later than 14 calendar days after receipt of the soft copy submission.

**Subsequent Submission(s):** Updates to the CDSR-WTT, addressing Canada's comments as applicable, must be submitted as required, no later than 28 days from previous submissions of a CDSR-WTT, until all quantities of items listed within the CDSR-WTT are confirmed delivered to their Canadian points of destination.

9. DISTRIBUTION and ADDRESSEES

| A. ADDRESSEE | B. COPIES | |
|---|---|---|
| | ALL | |
| | Hard Copy | Soft Copy |
| DND TA | 0 | 1 |
| PSPC CA | 0 | 1 |
| DND PA | 0 | 1 |
| DND ILSM | 0 | 1 |
| | | |
| | | |
| | | |

# A4.0 APPENDIX: DATA ITEM DESCRIPTION

## A4.1 DID Item List

| DID # | Title | CDRL # |
|---|---|---|
| WTT-PM-001 | Project Management Plan | WTT-PM-001 |
| WTT-PM-002 | Meeting Agenda | WTT-PM-002 |
| WTT-PM-003 | Meeting Minutes | WTT-PM-003 |
| WTT-SE-101 | First Article Acceptance Plan | WTT-SE-101 |
| WTT-SE-102 | Top Level Assembly Drawings | WTT-SE-102 |
| WTT-SE-103 | Acceptance Test Report | WTT-SE-103 |
| WTT-ILS-201 | Operator Manual | WTT-ILS-201 |
| WTT-ILS-202 | Repair Manual | WTT-ILS-202 |
| WTT-ILS-203 | Permissive Repair Schedule and Standard Repair Times | WTT-ILS-203 |
| WTT-ILS-204 | Illustrated Parts Manual | WTT-ILS-204 |
| WTT-ILS-205 | Operator Training Package | WTT-ILS-205 |
| WTT-ILS-206 | Preservation, Storage and Reactivation Instructions | WTT-ILS-206 |
| WTT-ILS-207 | Stowage, Shipping, and Handling Instructions | WTT-ILS-207 |
| WTT-ILS-208 | Equipment Data Summary | WTT-ILS-208 |
| WTT-ILS-209 | Provisioning Parts Breakdown | WTT-ILS-209 |
| WTT-ILS-210 | Supplementary Provisioning Technical Documentation | WTT-ILS-210 |
| WTT-ILS-211 | Identification Plates | WTT-ILS-211 |
| WTT-ILS-212 | Controlled & Non-Controlled Goods List | WTT-ILS-212 |
| WTT-ILS-213 | Identification Labels for Shipment, and Packaging Codes | WTT-ILS-213 |
| WTT-ILS-214 | Repair and Overhaul Plan | WTT-ILS-214 |
| WTT-ILS-215 | Warranty Support Plan | WTT-ILS-215 |
| WTT-ILS-216 | Contract Delivery Status Report – Spares | WTT-ILS-216 |
| WTT-ILS-217 | Contract Delivery Status Report – WTT | WTT-ILS-217 |

## A4.2 DID Table Definitions

The following section defines the various blocks of information found on the Data Item Description (DID) forms:

**BLOCK 1 – TITLE**
The title of the data item for the DID.

**BLOCK 2 - IDENTIFICATION NUMBER**
The Data Item Description (DID) number, consisting of a sequential three-digit number and prefixed with an abbreviation code, to uniquely identify the DID. Note that the 001-099 series is reserved to Project Management (PM) DIDs, the 101-199 series is reserved to Systems Engineering (SE) DIDs and the 201-299 series is reserved to Integrated Logistics Support (ILS) DIDs. The abbreviation codes used for the prefix are:

"PM" for Project Management
"SE" for Systems Engineering
"ILS" for Integrated Logistics Support

**BLOCK 3 - DESCRIPTION**
Provides a general description of the data content requirements.

**BLOCK 4 – RELATED DOCUMENT(S)**
Provides a listing of the related documents and specifications associated with and required to produce this DID.

**BLOCK 5 - CONTRACT REFERENCE**
The specific paragraph numbers from the Contract Statement of Work and CDRL to assist in identifying the work effort associated with the data item.

**BLOCK 6 - PREPARATION INSTRUCTIONS**
Provides the preparation instructions for the content and format requirements for the DID.

## A4.3 DID – Project Management Plan

| DATA ITEM DESCRIPTION | |
|---|---|
| 1. TITLE<br>**Project Management Plan (PMP)** | 2. IDENTIFICATION NUMBER<br>DID WTT-PM-001 |
| 3. DESCRIPTION<br>The Project Management Plan (PMP) is the top-level plan that describes the Contractor's strategy, plans, methodologies and processes for meeting the requirements of the Contract. | |
| 4. RELATED DOCUMENTS | 5. CONTRACT REFERENCE<br>SOW: **Para. 3.2.1 (pg. 10)**<br>CDRL: **App. A3.3 (pg. 39)** |

6. PREPARATION INSTRUCTIONS

6.1. **CONTENT**

6.1.1. The PMP must describe the management processes, administrative procedures and organizational structure that will be used to manage the work of the Contractor.

6.1.2. The PMP must further detail the practices and procedures for project scheduling, planning, organizing, directing, executing, communicating, reporting, managing risk, managing environmental health and safety issues and impacts, managing information, and closing of action items for all Work required by the Contract.

6.1.3. The PMP must address in detail the above points through the following:

6.1.3.1. Overview:

6.1.3.1.1. Purpose, Background, Scope and Objectives;

6.1.3.1.2. Assumptions, Constraints and Risks;

6.1.3.1.3. All Project Deliverables;

6.1.3.1.4. Organization Summary; and

6.1.3.2. Project Schedule (Detailed MS Project Gantt chart) which illustrates all project tasks, interdependencies, critical path, and relationships between activities.

6.1.3.3. Organization:

6.1.3.3.1. Project Management Organizational Chart, consisting of internal and external organizations as it pertains to this Contract;

6.1.3.4. Management Processes:

6.1.3.4.1. Project Management Approach and Procedures;

6.1.3.4.2. Schedule Control;

6.1.3.4.3. Quality Assurance;

6.1.3.4.4. Reporting;

6.1.3.4.5. Communications;

6.1.3.4.6. Risk Management (RM);

6.1.3.4.7. Environmental, Health and Safety Issues Management;

6.1.3.4.8. Information Management (IM); and

6.1.3.4.9. Change Control Processes.

6.2. **SOFT COPY FORMAT**

6.2.1. The PMP must be submitted as a PDF file type.

6.2.2. The schedule must be submitted as a MS Project file.

6.2.3. **Soft Copy format submission size below 7MB** – The PMP PDF may be submitted via email as follows:

6.2.3.1. To Field: As per the related CDRL section 9.A. Addressee, as identified in the contract.

6.2.3.2. Subject Field: WTT-PM-001 – PMP – Rev [#] – [Date of Issue]

6.2.4. **Soft Copy format submission size at or above 7MB** - The PMP PDF must be submitted on CD or DVD media and be labelled as follows:

6.2.4.1. Water Tank Trailer

6.2.4.2. PMP;

6.2.4.3. WTT-PM-001;

6.2.4.4. The Revision number, and

6.2.4.5. The date of issue.

## A4.4 DID – Meeting Agenda

| DATA ITEM DESCRIPTION | |
|---|---|
| 1. TITLE<br>**Meeting Agenda** | 2. IDENTIFICATION NUMBER<br>DID WTT-PM-002 |
| 3. DESCRIPTION<br>The Meeting Agenda contains the venue information and identifies the discussion items to be covered at meetings. | |
| 4. RELATED DOCUMENTS | 5. CONTRACT REFERENCE<br>SOW: **Para. 3.3.6.1.1 (pg. 11)**<br>CDRL: **App. A3.4 (pg. 40)** |

6. PREPARATION INSTRUCTIONS

6.1. **CONTENT**

6.1.1. The Meeting Agenda must set forth the venue, identify all requirements and list the discussion items to be covered at the meeting.

6.1.2. Venue. The Meeting Agenda must address the venue as follows:

6.1.2.1. Meeting Identification Number;

6.1.2.2. Purpose;

6.1.2.3. Date, time and location; and

6.1.2.4. Attendees.

6.1.3. Discussion items. The Meeting Agenda must address the discussion items through the following sections:

6.1.3.1. Opening Remarks;

6.1.3.2. Agenda Review;

6.1.3.3. Review of Previous Minutes;

6.1.3.4. Opened Discussion Items;

6.1.3.5. New Discussion Items;

6.1.3.6. Review of Action Items;

6.1.3.7. Next Venue; and

6.1.3.8. Closing Remarks.

6.2. **SOFT COPY FORMAT**

6.2.1. The Meeting Agenda must be submitted as a PDF file type.

6.2.2. The Meeting Agenda PDF must be submitted via email (submission size not to exceed 7MB) as follows:

6.2.2.1. To Field: As per the related CDRL section 9.A. Addressee, as identified in the contract.

6.2.2.2. Subject Field: WTT-PM-002 – Meeting Agenda – Rev [#] – [Date of Issue]

## A4.5 DID – Meeting Minutes

| DATA ITEM DESCRIPTION | |
|---|---|
| 1. TITLE<br>**Meeting Minutes** | 2. IDENTIFICATION NUMBER<br>DID WTT-PM-003 |
| 3. DESCRIPTION<br>The Meeting Minutes contains the detailed records of proceedings, discussions, decisions and action items from meetings. | |
| 4. RELATED DOCUMENTS | 5. CONTRACT REFERENCE<br>SOW: **Para. 3.3.6.1.2 (pg. 11)**<br>CDRL: **App. A3.5 (pg. 41)** |

6. PREPARATION INSTRUCTIONS

6.1. **CONTENT**

6.1.1. The Meeting Minutes must contain the detailed records of proceedings, discussions, decisions and action items from the meeting and be presented through the following sections:

6.1.1.1. General – consisting of meeting identification number, purpose, date, time and location;

6.1.1.2. Attendees, consisting of the organization each person represents, and the identification of the Chairperson(s);

6.1.1.3. Opening Remarks;

6.1.1.4. **Action Item Report** - used to monitor issues, assign responsibility, direct action and track status, history, and progress, and must consisting of:

6.1.1.4.1. Item #; date initiated; required action; assigned actionee; target completion date; cross-reference to all related action items.

6.1.1.4.2. Action Item Report must be **updated** with each meeting and must consisting of:

6.1.1.4.2.1. Action Item current status and the actual date completed;

6.1.1.5. Next Venue;

6.1.1.6. Closing Remarks;

6.2. **SOFT COPY FORMAT**

6.2.1. The Meeting Minutes must be submitted as a PDF file type.

6.2.2. The Meeting Minutes PDF must be submitted via email (submission size not to exceed 7MB) as follows:

6.2.2.1. To Field: As per the related CDRL section 9.A. Addressee, as identified in the contract.

6.2.2.2. Subject Field: WTT-PM-003 – Meeting Minutes – Rev [#] – [Date of Issue]

## A4.6 DID – First Article Acceptance Plan (FAAP)

| DATA ITEM DESCRIPTION | |
|---|---|
| 1. TITLE<br>**First Article Acceptance Plan** | 2. IDENTIFICATION NUMBER<br>DID WTT-SE-101 |
| 3. DESCRIPTION<br>The First Article Acceptance Plan is the blueprint of activities and procedures that will show that the equipment being offered for acceptance is in accordance with the requirements of this SOW, and satisfies the requirements of the technical specifications. | |
| 4. RELATED DOCUMENTS<br>Nil | 5. CONTRACT REFERENCE<br>SOW: **Para. 4.1.4 (pg. 13)**<br>CDRL: **App. A3.6 (pg. 42)** |

6. PREPARATION INSTRUCTIONS

6.1. **CONTENT**

6.1.1. **First Article Acceptance Plan (FAAP)**

6.1.2. The FAAP must describe all activities to be conducted on the equipment offered for acceptance, and that all requirements from the Technical specifications have been met.

6.1.3. Headings and information that must be considered/included:

6.1.3.1. Introduction;

6.1.3.2. Approach;

6.1.3.3. Item pass/fail criteria, etc.

6.1.4. The FAAP must present the verification method that will be employed to show compliancy with each of the Technical Specification requirements. The FAAP must describe the rationale as to why the proposed verification method was chosen and how it will prove to Canada that the equipment offered for acceptance meets the specific technical specification.

6.1.5. This verification method must be selected from the following:

6.1.5.1. CERTIFICATION – Two forms of Certification are possible: - first would be from a 3rd party recognized association of technical knowledge and expertise in the applicable area being sought, and the second from an "in house" qualified expert that would certify that the standards are met in accordance with his or her own testing or investigation and is attesting to this in his or her professional opinion.

6.1.5.2. ANALYSIS - An element of verification that uses established technical or mathematical models or simulations, algorithms, charts, graphs, circuit diagrams, or other scientific principles and procedures to provide evidence that stated requirements were met.

6.1.5.3. EXAMINATION - An element of verification that is generally non-destructive and typically includes the use of sight, hearing, smell, touch, and taste; simple physical manipulation; and mechanical and electrical gauging and measurement. Must include Information to uniquely identify the item to be inspected.

6.1.5.4. DEMONSTRATION - An element of verification that involves the actual operation of an item to provide evidence that the required functions were accomplished under specific scenarios. The items may be instrumented and performance monitored.

6.1.5.5. TEST - An element of verification in which scientific principles and procedures are applied to determine the properties or functional capabilities of items. Must include Information to uniquely identify the item to be tested the success/failure criteria to be applied if applicable, as well the configuration and initial conditions, including any preparatory requirements or other pre-test activities;

6.1.6. The FAAP must describe and provide a test plan for all testing whether it be contractor-led mandated acceptance tests, or tests that may be the chosen method of verification as per 6.1.4.5 above. As a minimum, the test plan must detail who will be conducting the test and how the test will be conducted.

6.1.7. The FAAP must detail the schedule and location of all FAA activities. In cases where “Certification “is the chosen method of verification, the Contractor must detail who the Certifying body is and qualification in order to do so.

6.1.8. The FAAP must detail the steps and expected schedule for Canada’s involvement in, or witnessing of, FAA activities.

6.1.9. The FAAP must also include the following information:

6.1.9.1. Process to follow in case of test failures

6.1.9.2. Measures in place to mitigate financial as well as delivery risks

6.2. **GENERAL FORMAT**

6.2.1. The FAAP must be prepared in the Contractor’s format.

6.3. **SOFT COPY FORMAT**

6.3.1. The FAAP must be submitted as a PDF file.

6.3.2. **Soft Copy format submission size below 7MB** – The FAAP may be submitted via email as follows:

6.3.2.1. To Field: As per the related CDRL section 9.A. Addressee, as identified in the contract.

6.3.2.2. Subject Field: WTT-SE-101 – FAAP – [Rev # as applicable] – [Date of Issue as applicable]

6.3.3. **Soft Copy format submission size at or above 7MB** - The FAAP must be submitted on CD or DVD media and be labelled as follows:

6.3.3.1. Water Tank Trailer

6.3.3.2. First Article Acceptance Plan

6.3.3.3. WTT-SE-101;

6.3.3.4. The Revision number, and

6.3.3.5. The date of issue.

## A4.7 DID – Top Level Assembly Drawings

| DATA ITEM DESCRIPTION | |
|---|---|
| 1. TITLE<br>**Top Level Assembly Drawings** | 2. IDENTIFICATION NUMBER<br>DID WTT-SE-102 |
| 3. DESCRIPTION<br>The Top Level Assembly Drawings describes the assembled relationship of the WTT and its associated System Component | |
| 4. RELATED DOCUMENTS<br>**D-01-400-001/SG-000** *Standard - Engineering Drawing Practices*<br>**D-01-400-002/SF-000** *Specification - Levels of Engineering Drawings* | 5. CONTRACT REFERENCE<br>SOW: **Para. 3.3.2.2 (pg. 10)**<br>CDRL: **App. A3.7 (pg. 43)** |

6. PREPARATION INSTRUCTIONS

6.1. **CONTENT**

6.1.1. The Top Level Assembly Drawing must illustrate to Canada that the contractor fully understands the design requirements of the SOW.

6.2. **GENERAL FORMAT**

6.2.1. The Top Level Assembly Drawings must be prepared IAW:

6.2.1.1. D-01-400-002/SF-000, para 3 to para 3.3.1.c; and,

6.2.1.2. D-01-400-001/SG-000, para 7.4.1.

6.2.2. A minimum of four drawings are required, as follows:

6.2.2.1. The WTT complete with the System Components as listed in Para A1.1.1.1

6.2.2.2. The Water Tank and assemblies listed in Para A1.2.1

6.2.2.3. Water Heater System and assemblies listed in Para A1.2.1.25.2

6.2.2.4. Trailer Chassis and assemblies listed in Para A1.2.3.

6.2.3. All drawings must have at least three standard views or multiple isometric views.

6.3. **HARD COPY FORMAT**

6.3.1. The Top Level Assembly Drawings must be printed on paper with these characteristics:

6.3.1.1. Of standard US size of at least 432 mm x 279 mm;

6.3.1.2. Weight of no less than 90 gsm;

6.3.1.3. Brightness of no less than 92 ISO brightness;

6.4. **SOFT COPY FORMAT**

6.4.1. The Top Level Assembly Drawings must be submitted as PDF file type, and match the printed format and layout.

6.4.1.1. Viewing the PDF version: pages, regardless of size, containing text and illustrations in landscape, must be rotated for electronic viewing and reading in landscape.

6.4.2. **Soft Copy format submission size below 7MB** – The Top Level Assembly Drawing PDFs may be submitted via email as follows:

6.4.2.1. To Field: As per the related CDRL section 9.A. Addressee, as identified in the contract.

6.4.2.2. Subject Field: WTT-SE-102 – Top Level Assembly Drawing – Rev [#] – [Date of Issue]

6.4.3. **Soft Copy format submission size at or above 7MB** - The Top Level Assembly Drawing PDFs must be submitted on CD or DVD media and be labelled as follows:

6.4.3.1. Water Tank Trailer

6.4.3.2. Top Level Assembly Drawings;

6.4.3.3. WTT-SE-102;

6.4.3.4. The Revision number, and

6.4.3.5. The date of issue.

## A4.8 DID – Acceptance Test Report (ATR)

| DATA ITEM DESCRIPTION | |
|---|---|
| 1. TITLE<br>**Acceptance Test Report (ATR)** | 2. IDENTIFICATION NUMBER<br>**DID WTT-SE-103** |
| 3. DESCRIPTION<br>The Acceptance test reports describe all testing, conditions and results of equipment tested IAW First Article Acceptance Plan FAAP | |
| 4. RELATED DOCUMENTS | 5. CONTRACT REFERENCE<br>**SOW**: Para 4.1.6 (pg.13)<br>**CDRL**: App. A3.8 (pg. 44) |

6. PREPARATION INSTRUCTIONS

6.1. **CONTENT**

6.1.1. The ATRs must describe the activities that were conducted on the equipment.

6.1.2. The ATRs must make cross references to appropriate technical specifications where applicable. For each test report, the following must be included:

6.1.2.1. Aim of the test,

6.1.2.2. Summary of test procedures,

6.1.2.3. Test results,

6.1.2.4. Description of any Deficiencies noted during testing,

6.1.2.5. Recommendations for correcting any noted deficiencies

6.1.2.6. Schedule of any retesting required, and

6.1.2.7. Risks and contingencies.

6.2. **GENERAL FORMAT**

6.2.1. The Acceptance Test Reports are in the contractors own format.

6.3. **HARD COPY FORMAT**

6.3.1. The Acceptance Test Reports must be printed on paper with these characteristics:

6.3.2. Weight of no less than 90 g/m$^2$;

6.3.3. Brightness of no less than 96 ISO brightness;

6.4. **SOFT COPY FORMAT**

6.4.1. The Acceptance Test Reports must be submitted as a PDF file type.

6.4.2. **Soft Copy format submission size below 7MB** – The Acceptance Test Reports PDF may be submitted via email as follows:

6.4.2.1. To Field: As per the related CDRL section 9.A. Addressee, as identified in the contract.

6.4.2.2. Subject Field: WTT-SE-103 – Acceptance Test Report – [Rev #] – [Date of Issue]

6.4.3. **Soft Copy format submission size at or above 7MB** - The Acceptance Test Reports PDF must be submitted on CD or DVD media and be labelled as follows:

6.4.3.1. Water Tank Trailer

6.4.3.2. Acceptance Test Report

6.4.3.3. WTT-SE-103

6.4.3.4. The Revision number, and

6.4.3.5. The date of issue.

## A4.9 DID – Operator Manual

| DATA ITEM DESCRIPTION | |
|---|---|
| 1. TITLE<br>**Operator Manual** | 2. IDENTIFICATION NUMBER<br>DID WTT-ILS-201 |
| 3. DESCRIPTION<br>The Operator Manual contains all the essential information required to describe the safe and correct operative procedures and operator maintenance associated with the equipment. | |
| 4. RELATED DOCUMENTS<br>**C-01-100-100/AG-008** *Writer's Guide for Technical Documentation* | 5. CONTRACT REFERENCE<br>SOW: **Para. 5.3.1.1.1 (pg. 14)**<br>CDRL: **App. A3.9 (pg. 45)** |

6 PREPARATION INSTRUCTIONS

6.1 **CONTENT**

6.1.1 The Operator Manual must cover the following topics, and others judged pertinent by the Contractor:

6.1.1.1 General Description/Equipment Overview;

6.1.1.2 Pre-use testing/inspection;

6.1.1.3 Preparation and set up for use;

6.1.1.4 Use and operation, including operation under emergency, adverse, or abnormal conditions, when applicable;

6.1.1.5 Operator Maintenance, IAW the Maintenance Concept para **5.1** (pg. 14);

6.1.1.6 Shut-down and post-shut-down actions and precautions;

6.1.1.7 Preparation for equipment transit by air, land, and sea;

6.1.1.8 Safety/Hazardous material issues;

6.1.2 The Operator Manual material covered in 6.1.1 above, must be amplified by illustrations, line drawings, and high quality pictures.

6.2 **GENERAL FORMAT**

6.2.1 The Operator Manual must be prepared in the Contractor's format while being in full conformance with the above-stated issue of C-01-100-100/AG-008.

6.2.2 The Operator Manual must include the National Defence Index of Documentation (NDID) number, provided to the Contractor by DND, which must be placed on the top right corner of all the pages of the manual.

6.3 **HARD COPY FORMAT**

6.3.1 The accepted Operator Manual hard copies must be:

6.3.1.1 Printed on paper with these characteristics:

6.3.1.1.1 Standard US Letter Size (270 mm x 216 mm)

6.3.1.1.2 Covers: 320-370 gsm Polyester film, matt surface and white;

6.3.1.1.3 Pages: 150-190 gsm Polyester film, matt surface and white;

6.3.1.2 Bound white or black PVC spiral coil.

6.4 **SOFT COPY FORMAT**

6.4.1 The Operator Manual must be provided as a PDF file with searchable text that matches the printed publication's format and layout. Links, bookmarks and thumbnails are to be included in the PDF file. All references made to a specific paragraph, figure, appendix must be appropriately linked.

6.4.2 Viewing the Operator Manual PDF: pages, regardless of size, containing text and illustrations in landscape, must be rotated for electronic viewing and reading in landscape.

6.4.3 **Soft Copy format submission size below 7MB** – The Operator Manual PDF and its native file may be submitted via email as follows:

6.4.3.1 To Field: As per the related CDRL section 9.A. Addressee, as identified in the contract.

6.4.3.2 Subject Field: WTT-ILS-201 – Operator Manual – Rev [#] – [Date of Issue]

6.4.4 **Soft Copy format submission size at or above 7MB** - The Operator Manual PDF and its native file must be submitted on CD or DVD media and be labelled as follows:

6.4.4.1 Water Tank Trailer

6.4.4.2 Operator Manual;

6.4.4.3 WTT-ILS-201;

6.4.4.4 The Revision number, and

6.4.4.5 The date of issue.

## A4.10 **DID – Repair Manual**

| DATA ITEM DESCRIPTION | |
|---|---|
| 1. TITLE<br>**Repair Manual** | 2. IDENTIFICATION NUMBER<br>DID WTT-ILS-202 |
| 3. DESCRIPTION<br>The Repair Manual contains all the information required by the Technician to perform preventative and corrective maintenance procedures and troubleshooting of the equipment. | |
| 4. RELATED DOCUMENTS<br>**D-01-100-204/SF-000** *Preparation of Preventive Maintenance Instructions*<br>**D-01-100-205/SF-000** *Preparation of Corrective Maintenance Instructions*<br>**C-01-100-100/AG-008** *Writer's Guide for Technical Documentation* | 5. CONTRACT REFERENCE<br>SOW: **Para. 5.3.1.2.1 (pg. 14)**<br>CDRL: **App. A3.10 (pg. 46)** |

6. PREPARATION INSTRUCTIONS

6.1. **CONTENT**

6.1.1. The Repair Manual must provide descriptive essential, preventive and corrective maintenance information on all components, groups of equipment and systems IAW the Maintenance Concept, Para. **5.1** (pg. 14).

6.1.2. The Repair Manual text must be amplified by comprehensive system or component illustration, good quality color pictures, pictograms and schematics.

6.2. **GENERAL FORMAT**

6.2.1. The Repair Manual must be prepared in the Contractor's format and be in full conformance with the current issue of C-01-100-100/AG-008, D-01-100-204/SF-000 and D-01-100-205/SF-000.

6.2.2. The Repair Manual must include the National Defence Index of Documentation (NDID) number, provided to the Contractor by DND, which must be placed on the right top corner of all the pages of the manual.

6.2.3. The Repair Manual must use illustrations, good quality color pictures and pictograms to help explain and describe actions, part location, relation, and repair context.

6.3. **HARD COPY FORMAT**

6.3.1. The accepted Repair Manual hard copies must be:

6.3.1.1. Printed on paper with these characteristics:

6.3.1.1.1. Standard US Letter Size (216 mm x 270 mm)

6.3.1.1.2. Covers: 320-370 gsm Polyester film, matt surface and white;

6.3.1.1.3. Pages: 150-190 gsm Polyester film, matt surface and white;

6.3.1.2. Bound with white or black spiral PVC coil.

6.4. **SOFT COPY FORMAT**

6.4.1. The Repair Manual soft copy format must meet the following:

6.4.1.1. Be a PDF file that matches the printed publication's format and layout. Links, bookmarks, and thumbnails are to be included in the PDF file.

6.4.1.2. All references made to a specific paragraph, figure, appendix must be appropriately linked.

6.4.1.3. Viewing the PDF: pages, regardless of size, containing text and illustrations in landscape, must be rotated for electronic viewing and reading in landscape.

6.4.2. **Soft Copy format submission size below 7MB** – The Repair Manual PDF and its native file may be submitted via email as follows:

6.4.2.1. To Field: As per the related CDRL section 9.A. Addressee, as identified in the contract.

6.4.2.2. Subject Field: WTT-ILS-202 – Repair Manual – Rev [#] – [Date of Issue]

6.4.3. **Soft Copy format submission size at or above 7MB** - The Repair Manual PDF and its native file must be submitted on CD or DVD media and be labelled as follows:

6.4.3.1. Water Tank Trailer

6.4.3.2. Repair Manual;

6.4.3.3. WTT-ILS-202;

6.4.3.4. The Revision number, and

6.4.3.5. The date of issue.

## A4.11 DID – Permissive Repair Schedule and Standard Repair Times

| DATA ITEM DESCRIPTION | |
|---|---|
| 1. TITLE<br>**Permissive Repair Schedule and Standard Repair Times** | 2. IDENTIFICATION NUMBER<br>DID WTT-ILS-203 |
| 3. DESCRIPTION<br>The Permissive Repair Schedule and Standard Repair Times (PRS & SRT) provides information for maintenance support and planning of the equipment. | |
| 4. RELATED DOCUMENTS<br>**C-04-010-002/AM-000** *Permissive Repair Schedules (PRSs) and Standard Repair Times (SRTs);*<br>**C-04-006-001/AM-001** *Land Maintenance System Lines of Maintenance and Levels of Repair* | 5. CONTRACT REFERENCE<br>SOW: **Para. Para. 5.3.1.3.1 (pg. 15)**<br>CDRL: **App. A3.11 (pg. 47)** |

6. PREPARATION INSTRUCTIONS

6.1. **CONTENT**

6.1.1. The PRS & SRT must include a breakdown of all maintenance tasks for Operator, Technician, and those that would be completed at the OEM, and must also include the number of hours required to perform the repair tasks, rounded up to the nearest half hour.

6.1.2. The Levels of Repair and Lines of Maintenance for the PRS & SRT must be determined using the definitions provided in C-04-006-001/AM-001 and in discussions with DND ILS personnel.

6.2. **GENERAL FORMAT**

6.2.1. The PRS & SRT must be prepared in full conformance with C-04-010-002/AM-000;

6.2.2. The PRS & SRT must have the National Defence Index of Documentation (NDID) number, provided to the Contractor by DND, which must be placed on the top right corner of each page.

6.3. **HARD COPY FORMAT**

6.3.1. The PRS & SRT hard copies must be:

6.3.1.1. Printed on paper with these characteristics:

6.3.1.1.1. Standard US Letter Size (270 mm x 216 mm);

6.3.1.1.2. Covers: 320-370 gsm Polyester film, matt surface and white;

6.3.1.1.3. Pages: 150-190 gsm Polyester film, matt surface and white;

6.3.1.2. Bound with white or black spiral PVC coil.

6.4. **SOFT COPY FORMAT**

6.4.1. The PRS & SRT must be provided as a PDF file with searchable text that matches the printed publication's format and layout. Links, bookmarks and thumbnails are to be included in the PDF file. All references made to a specific paragraph, figure, appendix must be appropriately linked.

6.4.2. **Soft Copy format submission size below 7MB** – The PRS & SRT PDF and its native file may be submitted via email as follows:

6.4.2.1. To Field: As per the related CDRL section 9.A. Addressee, as identified in the contract.

6.4.2.2. Subject Field: WTT-ILS-203 – PRS & SRT –Rev [#] – [Date of Issue]

6.4.3. **Soft Copy format submission size at or above 7MB** - The PRS & SRT PDF and its native file must be submitted on CD or DVD media and be labelled as follows:

6.4.3.1. Water Tank Trailer

6.4.3.2. PRS & SRT;

6.4.3.3. WTT-ILS-203;

6.4.3.4. The Revision number, and

6.4.3.5. The date of issue.

## A4.12 **DID – Illustrated Parts Manual**

| DATA ITEM DESCRIPTION | |
|---|---|
| 1. TITLE<br>**Illustrated Parts Manual** | 2. IDENTIFICATION NUMBER<br>DID WTT-ILS-204 |
| 3. DESCRIPTION<br>The Illustrated Parts Manual (IPM) contains all the necessary information to positively identify all parts of the equipment and to relate them within assemblies. | |
| 4. RELATED DOCUMENTS<br>**D-01-100-207/SF-002** *Preparation of Interim Illustrated Parts Manuals for Land Equipment***.**<br>**DID WTT-ILS-211** *Provisioning Parts Breakdown* | 5. CONTRACT REFERENCE<br>SOW: **Para. 5.3.1.4.1 (pg. 15)**<br>CDRL: **App. A3.12 (pg. 48)** |

6 PREPARATION INSTRUCTIONS

6.1 **CONTENT**

6.1.1 The Illustrated Parts Manual content must be IAW D-01-100-207/SF-002, and the drawings must be sequenced as per the PPB breakdown of assemblies, by level. That is, an illustration showing a B-level assembly must have have all C-level parts identified in that drawing, as practicable. Any C-level part from that list that has D-level parts must have their illustrations sequenced as per the PPB, but after the C-level list. See Fig 1 below.

| PPB Indention | Serial |
|---|---|
| *A* | ***1*** |
| *B* | ***2*** |
| *C* | ***3*** |
| *C* | ***4*** |
| *D* | ***5*** |
| *D* | ***6*** |
| *C* | ***7*** |
| D | ***8*** |
| D | ***9*** |
| B | ***10*** |
| C | ***11*** |
| C | ***12*** |

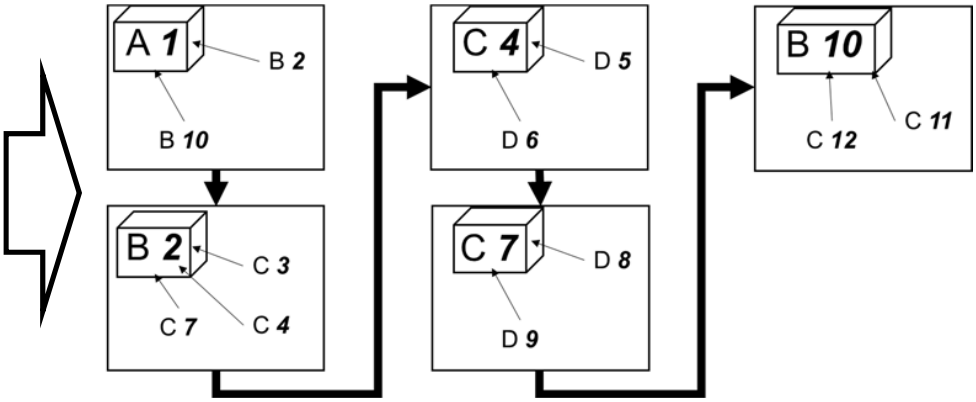


**Figure 1. IPM Breakdown Sequence**

6.1.2 The Illustrated Parts Manual must contain illustrations, exploded views, and drawings and associated lists necessary for the proper identification of all parts, assemblies, and special equipment to the Lowest Replaceable Unit (LRU).

6.1.3 The exploded views contained in the Illustrated Parts Manual must amplify the relationship between all parts and assemblies to facilitate repair of the equipment and the replacement of parts and assemblies down to the LRU.

6.1.4 The Illustrated Parts Manual must include the National Defence Index of Documentation (NDID) number, provided to the Contractor by DND, which must be placed on the top right corner of each page of the manual.

6.2 **GENERAL FORMAT**

6.2.1 The format of the Illustrated Parts Manual must be IAW D-01-100-207/SF-002, with the exception that “NCAGE” must be used instead of “NSCM” (see DID WTT-ILS-211).

6.2.2 The Illustrated Parts Manual must **not** use photographs as illustrations.

6.3 **HARD COPY FORMAT**

6.3.1 The accepted Illustrated Parts Manual hard copies must be:

6.3.1.1 Printed on paper with these characteristics:

6.3.1.1.1 Standard US Letter Size (216 mm x 270 mm);

6.3.1.1.2 Covers: 320-370 gsm Polyester film, matt surface and white;

6.3.1.1.3 Pages: 150-190 gsm Polyester film, matt surface and white;

6.3.1.2 Bound with white or black spiral PVC coil.

6.4 **SOFT COPY FORMAT**

6.4.1 The Illustrated Parts Manual soft copy format must be PDF, with searchable text, with pages rotated as needed for normal viewing on screen.

6.4.2 **Soft Copy format submission size below 7MB** – The Illustrated Parts Manual PDF may be submitted via email as follows:

6.4.2.1 To Field: As per the related CDRL section 9.A. Addressee, as identified in the contract.

6.4.2.2 Subject Field: WTT-ILS-204 – Illustrated Parts Manual – Rev [#] – [Date of Issue]

6.4.3 **Soft Copy format submission size at or above 7MB** - The Illustrated Parts Manual PDF and its native file must be submitted on CD or DVD media and be labelled as follows:

6.4.3.1 Water Tank Trailer

6.4.3.2 Illustrated Parts Manual;

6.4.3.3 WTT-ILS-204;

6.4.3.4 The Revision number, and

6.4.3.5 The date of issue.

## A4.13 **DID – Operator Training Package**

| DATA ITEM DESCRIPTION | |
|---|---|
| 1. TITLE<br>**Operator Training Package** | 2. IDENTIFICATION NUMBER<br>DID WTT-ILS-205 |
| 3. DESCRIPTION<br>The Operator Training Package will be used as the reference material during the Training Sessions, and to facilitate future lesson plan preparation on the operation, Operator maintenance and storage of the equipment. | |
| 4. RELATED DOCUMENTS<br>**C-01-100-100/AG-008** *Writer's Guide for Technical Documentation* | 5. CONTRACT REFERENCE<br>SOW: **Para. 5.3.1.5.1 (pg. 15)**<br>CDRL: **App. A3.13 (pg. 49)** |

6. PREPARATION INSTRUCTIONS

6.1. **CONTENT**

6.1.1. The Operator Training Package course material must include, in the order judged most appropriate by the Contractor, the following subjects:

6.1.1.1. General Description/Equipment Overview;

6.1.1.2. Pre-use testing/inspection;

6.1.1.3. Preparation and set up for use;

6.1.1.4. Use and operation, including operation under emergency, adverse, or abnormal conditions, when applicable;

6.1.1.5. Preparation for travel, handling, preservation and storage;

6.1.1.6. Safety and Hazardous material issues;

6.1.1.7. Operator Troubleshooting;

6.1.1.8. Basic diagnosis and fault finding; and,

6.1.1.9. Operator Maintenance IAW the Maintenance Concept para. **5.1** (pg. 14).

6.1.2. The training material for the Operator Training Package must be amplified with color schemes, drawings and good quality color photos.

6.1.3. The Operator Training Package course material subjects must be approached from the perspective of trained and qualified Prime Mover drivers.

6.1.4. The Operator Training Package course material must not present any information that cannot also be found in the Technical Publication Package documents; those documents remain the primary reference for the equipment.

6.1.5. The Operator Training Package must include a **Student Handout** that includes the course material described above.

6.1.6. The Operator Training Package must include an **Instructor Lesson Plan** that includes the course material described above, speaker's notes, and that outlines the following:

6.1.6.1. Classroom's physical and functional requirements;

6.1.6.2. Field area's physical and functional requirements;

6.1.6.3. Training Session schedule, divided by course material subjects;

6.1.6.4. Instructor/Student ratio for the course material subjects;

6.1.6.5. Training materiel to be supplied by the Contractor;

6.1.6.6. Training material to be supplied by Canada.

6.2. **GENERAL FORMAT**

6.2.1. The Operator Training Package can be prepared in the Contractor's format while using C-01-100-100/AG-008 as guidance.

6.2.2. No Contractor or sub-contractor logo, name, trademark, or other wording or device that may be interpreted as advertising must appear in the publication.

6.2.3. The Operator Training Package **Student Handout** must have no more than three (3) slides per page of the course material, and have additional space and lines for note taking.

6.2.4. The Operator Training Package **Instructor Lesson Plan** must have one (1) slide per page of the course material, with the speaker's notes below it.

6.3. **HARD COPY FORMAT**

6.3.1. The Operator Training Package must be furnished in a three (3) ring binder(s) and printed on paper with these characteristics:

6.3.1.1. Weight of no less than 90 gsm; and,

6.3.1.2. Brightness of no less than 92 ISO brightness

6.4. **SOFT COPY FORMAT**

6.4.1. The Operator Training Package soft copy format must be MS PowerPoint.

6.4.2. **Soft Copy format submission size below 7MB** – The Operator Training Package may be submitted via email as follows:

6.4.2.1. To Field: As per the related CDRL section 9.A. Addressee, as identified in the contract.

6.4.2.2. Subject Field: WTT-ILS-205 – Operator Training Package – Rev [#] – [Date of Issue]

6.4.3. **Soft Copy format submission size at or above 7MB** - The Operator Training Package file must be submitted on CD or DVD media and be labelled as follows:

6.4.3.1. Water Tank Trailer

6.4.3.2. Operator Training Package;

6.4.3.3. WTT-ILS-205;

6.4.3.4. The Revision number, and

6.4.3.5. The date of issue.

## A4.14 **DID – Preservation, Storage and Reactivation Instructions**

| DATA ITEM DESCRIPTION | |
|---|---|
| 1. TITLE<br>**Preservation, Storage and Reactivation Instructions** | 2. IDENTIFICATION NUMBER<br>DID WTT-ILS-206 |
| 3. DESCRIPTION<br>The Preservation, Storage and Reactivation Instructions (PSRI) provides guidance for the preservation and storage, in-storage inspections, exercising, and reactivation of the WTT. | |
| 4. RELATED DOCUMENTS<br>**D-01-100-211/SF-000** *Preservation, Storage and Handling Instructions*<br>**C-01-100-100/AG-008** *Writer's Guide for Technical Documentation* | 5. CONTRACT REFERENCE<br>SOW: **Para. 5.3.1.6.1 (pg. 15)**<br>CDRL: **App. A3.14 (pg. 50)** |

6. PREPARATION INSTRUCTIONS

6.1. **CONTENT**

6.1.1. The PSRI must contain the necessary data as outlined in D-01-100-211/SF-000, *Preservation, Storage and Handling Instructions,* **omitting** Part 4 – Handling and Shipping.

6.2. **GENERAL FORMAT**

6.2.1. The PSRI must be prepared in the Contractor's format while being in full conformance with the above-stated issue of C-01-100-100/AG-008.

6.2.2. The PSRI must have the NDID number, provided to the Contractor by DND, on the top right corner of all the pages.

6.3. **HARD COPY FORMAT**

6.3.1. The accepted PSRI hard copies must be:

6.3.1.1. Printed on paper with these characteristics:

6.3.1.1.1. Standard US Letter Size (216 mm x 270 mm)

6.3.1.1.2. Covers: 320-370 gsm Polyester film, matt surface and white;

6.3.1.1.3. Pages: 150-190 gsm Polyester film, matt surface and white;

6.3.1.2. Bound with white or black spiral PVC coil.

6.4. **SOFT COPY FORMAT**

6.4.1. The PSRI must be provided as a PDF file with searchable text that matches the printed publication's format and layout. Links, bookmarks and thumbnails are to be included in the PDF file. All references made to a specific paragraph, figure, appendix must be appropriately linked.

6.4.2. Viewing the PDF version: pages, regardless of size, containing text and illustrations in landscape, must be rotated for electronic viewing and reading in landscape.

6.4.3. **Soft Copy format submission size below 7MB** – The PRSI PDF and its native file may be submitted via email as follows:

6.4.3.1. To Field: As per the related CDRL section 9.A. Addressee, as identified in the contract.

6.4.3.2. Subject Field: WTT-ILS-206 – PRSI – Rev [#] – [Date of Issue]

6.4.4. **Soft Copy format submission size at or above 7MB** - The PRSI PDF and its native file must be submitted on CD or DVD media and be labelled as follows:

6.4.4.1. Water Tank Trailer

6.4.4.2. PRSI;

6.4.4.3. WTT-ILS-206;

6.4.4.4. The Revision number, and

6.4.4.5. The date of issue.

## A4.15 **DID – Stowage, Shipping, and Handling Instructions**

| DATA ITEM DESCRIPTION | |
|---|---|
| 1. TITLE<br>**Stowage, Shipping, and Handling Instructions** | 2. IDENTIFICATION NUMBER<br>DID WTT-ILS-207 |
| 3. DESCRIPTION<br>The Stowage, Shipping, and Handling Instructions (SSHI) manual provides guidance for the safe stowage, shipping and handling of the equipment. | |
| 4. RELATED DOCUMENTS<br>**D-01-100-211/SF-000** *Preservation, Storage and Handling Instructions*<br>**C-01-100-100/AG-008** *Writer's Guide for Technical Documentation* | 5. CONTRACT REFERENCE<br>SOW: **Para. 5.3.1.7.1 (pg. 15)**<br>CDRL: **App. A3.15 (pg. 51)** |

6. PREPARATION INSTRUCTIONS

6.1. **CONTENT**

6.1.1. The SSHI must contain the necessary data as outlined in Part 4 – *Handling and Shipping* of D-01-100-211/SF-000 for:

6.1.1.1. All standard means of conveyance:

6.1.1.1.1. Stowed on a generic flat trailer;

6.1.1.1.2. Rail transport;

6.1.1.1.3. Maritime transport; and,

6.1.1.1.4. Air Transport.

6.1.1.2. All standard means of handling:

6.1.1.2.1. Cranes;

6.1.1.2.2. Military Mobile Maintenance and Recovery Vehicles (TBD);

6.1.1.2.3. Forklifts;

6.1.1.2.4. The means of handling large assemblies in maintenance operations are to be described in the WTT Repair Manual.

6.1.2. Data common to all means of conveyance and handling need not be repeated and can be grouped in a general section.

6.2. **GENERAL FORMAT**

6.2.1. The SSHI must be prepared in the Contractor's format while being in full conformance with the above-stated issue of C-01-100-100/AG-008.

6.2.2. The SSHI must have the National Defence Index of Documentation (NDID) number, provided to the Contractor by DND, on the top right corner of all the pages.

6.3. **HARD COPY FORMAT**

6.3.1. The accepted SSHI hard copies must be:

6.3.1.1. Printed on paper with these characteristics:

6.3.1.1.1. Standard US Letter Size (216 mm x 270 mm)

6.3.1.1.2. Covers: 320-370 gsm Polyester film, matt surface and white;

6.3.1.1.3. Pages: 150-190 gsm Polyester film, matt surface and white;

6.3.1.2. Bound with white or black spiral PVC coil.

6.4. **SOFT COPY FORMAT**

6.4.1. The SSHI must be provided as a PDF file with searchable text that matches the printed publication's format and layout. Links, bookmarks and thumbnails are to be included in the PDF file. All references made to a specific paragraph, figure, appendix must be appropriately linked.

6.4.2. Viewing the PDF version: pages, regardless of size, containing text and illustrations in landscape, must be rotated for electronic viewing and reading in landscape.

6.4.3. **Soft Copy format submission size below 7MB** – The SSHI PDF and its native file may be submitted via email as follows:

6.4.3.1. To Field: As per the related CDRL section 9.A. Addressee, as identified in the contract.

6.4.3.2. Subject Field: WTT-ILS-207 – SSHI – Rev [#] – [Date of Issue]

6.4.4. **Soft Copy format submission size at or above 7MB** - The SSHI PDF and its native file must be submitted on CD or DVD media and be labelled as follows:

6.4.4.1. Water Tank Trailer

6.4.4.2. SSHI;

6.4.4.3. WTT-ILS-207;

6.4.4.4. The Revision number, and

6.4.4.5. The date of issue.

## A4.16 DID – Equipment Data Summary

| DATA ITEM DESCRIPTION | |
|---|---|
| 1. TITLE<br>**Equipment Data Summary** | 2. IDENTIFICATION NUMBER<br>DID WTT-ILS-208 |
| 3. DESCRIPTION<br>The Equipment Data Summary provides vehicle technical specifications and descriptive identification data for the equipment, in abbreviated form, suitable for management or staff planning. | |
| 4. RELATED DOCUMENTS<br>**D-01-100-200/SF-000,** *Preparation of Data Summary; and,*<br>**C-01-100-100/AG-008,** *Writer's Guide for Technical Documentation* | 5. CONTRACT REFERENCE<br>SOW: **Para. 5.3.1.8.1 (pg. 15)**<br>CDRL: **App. A3.16 (pg. 52)** |

6. PREPARATION INSTRUCTIONS

6.1. **CONTENT**

6.1.1. The Equipment Data Summary's content must be as outlined in D-01-100-200/SF-000, with the deviation that only line drawings must be used. Only applicable data points need to be included, i.e. the document must not contain "not applicable" or "n/a" markings.

6.2. **GENERAL FORMAT**

6.2.1. The Equipment Data Summary must be prepared in the Contractor's format while being in full conformance with the above-stated issue of C-01-100-100/AG-008.

6.2.2. The Equipment Data Summary must have the National Defence Index of Documentation (NDID) number, provided to the Contractor by DND, on the top right corner of all the pages.

6.3. **HARD COPY FORMAT**

6.3.1. The accepted Equipment Data Summary hard copies must be:

6.3.1.1. Printed on paper with these characteristics:

6.3.1.1.1. Standard US Letter Size (216 mm x 270 mm)

6.3.1.1.2. Covers: 320-370 gsm Polyester film, matt surface and white;

6.3.1.1.3. Pages: 150-190 gsm Polyester film, matt surface and white;

6.3.1.2. Bound with white or black spiral PVC coil.

6.4. **SOFT COPY FORMAT**

6.4.1. The Equipment Data Summary must be provided as a PDF file with searchable text that matches the printed publication's format and layout. Links, bookmarks and thumbnails are to be included in the PDF file. All references made to a specific paragraph, figure, appendix must be appropriately linked.

6.4.2. **Soft Copy format submission size below 7MB** – The SMP Vehicle and Equipment Data Summary PDF and its native file may be submitted via email as follows:

6.4.2.1. To Field: As per the related CDRL section 9.A. Addressee, as identified in the contract.

6.4.2.2. Subject Field: WTT-ILS-208 – SMP Vehicle and Equipment Data Summary – Rev [#] – [Date of Issue]

6.4.3. **Soft Copy format submission size at or above 7MB** - The SMP Vehicle and Equipment Data Summary PDF and its native file must be submitted on CD or DVD media and be labelled as follows:

6.4.3.1. Water Tank Trailer

6.4.3.2. Equipment Data Summary;

6.4.3.3. WTT-ILS-208;

6.4.3.4. The Revision number, and

6.4.3.5. The date of issue.

## A4.17 **DID – Provisioning Parts Breakdown**

| DATA ITEM DESCRIPTION | |
|---|---|
| 1. TITLE<br>**Provisioning Parts Breakdown** | 2. IDENTIFICATION NUMBER<br>DID WTT-ILS-209 |
| 3. DESCRIPTION<br>The Provisioning Parts Breakdown (PPB) is a top-down breakdown of the equipment in the configuration in which it is being procured. This breakdown is accomplished by listing all parts included in the end item in a lateral and descending family tree/generation breakdown. In this breakdown, all assemblies, subassemblies and parts are listed in relation to the next higher assembly. This relationship is shown by means of an indention code as illustrated in the top-down breakdown sequence. For example, an assembly with indention code B must be followed by a detailed breakdown of all the subsequent indention codes pertaining to that assembly before the next indention code B assembly (if any) is, in turn, broken down. | |
| 4. RELATED DOCUMENTS<br>**D-01-100-214/SF-000** *Specification for Preparation of Provisioning Documentation for Canadian Forces Equipment* | 5. CONTRACT REFERENCE<br>SOW: **Para. 5.4.3.1.1 (pg. 17)**<br>CDRL: **App. A3.17 (pg. 53)** |

6 PREPARATION INSTRUCTIONS

6.1 **CONTENT**

6.1.1 The PPB must contain data as per Table 1 below, which supersedes Figures 1 and 5 in D-01-100-214/SF-000.

6.1.2 The PPB Data Field definitions can be found at section 3.9.4 of the D-01-100-214/SF-000 specification. The following override applies: *Expanded Description (SPTD)* must contain the line item's applicable SPTD filename (see DID WTT-ILS-211).

6.1.3 The PPB attaching parts and fasteners, given a "Y" indention code, must immediately follow the part which they fasten.

6.1.4 For clarity:

6.1.4.1 *Contractor's Part Number* refers only to the Contractor which DND has contracted to supply the equipment; data from sub-contractors for items that they did not manufacture or do not control are not permitted. This field may be left blank if no data is available, or if it is the same as the MRN.

6.1.4.2 *Quantity per Assembly* (QPA) refers to the number of times the item is used in the next higher assembly. For example, a C-level item's QPA will show the number of times it is used in its related B-level assembly, without being multiplied by the number of B-level assemblies.

6.1.4.3 *Quantity per Equipment* (QPE) refers to the total number of times the item is used in the whole prime equipment (A-level). If that quantity exceeds 99999, the figure will show 99999 in the field, with the true quantity (if known) shown in the *Expanded Description* field.

6.1.4.4 *NATO Commercial and Government Entity* (NCAGE) Codes can be searched and requested through the NATO portal: https://eportal.nspa.nato.int/AC135Public/scage/CageList.aspx

**TABLE 1**

| DATA FIELDS REQUIRED | Field Length |
|---|---|
| Item Number | 6 |
| Indention Code | 1 |
| Item Name | 32 |
| MRN | 30 |
| NCAGE | 5 |
| Contractor's Part Number | 30 |
| NATO Stock Number | 16 |
| Quantity Per Assembly (QPA) | 4 |
| Quantity Per Equipment (QPE) | 5 |
| Standard Unit Price | 9 |
| Unit Of Issue | 2 |
| Reparability Indicator (REP) | 1 |
| Government Supplied Material (GSM) | 1 |
| Procurement Lead Time (PLT) | 3 |
| Shelf Life | 2 |
| Usage Rate | 5 |
| Recommended Buy Quantity | 8 |
| SMR Code | 5 |
| Expanded Description | 34 |
| Expanded Description (SPTD) | 74 |

6.1.5 The Source Maintenance and Recoverability (SMR) Codes are used to communicate maintenance and supply instructions to the various logistic support levels and user organizations for the logistic support of systems, equipment, and end items. The PPB SMR Codes must be chosen from the following list (see TABLE 2):

**TABLE 2**

| SMR Field Position | Code | Application/Explanation |
|---|---|---|
| First and Second Position *Source Codes* | PA | Item procured and stocked for anticipated or known usage. Items are normally considered for replenishment |
| | PC | Item procured and stocked, but is deteriorative in nature. |
| | PF | Support equipment which will not be stocked, but which will be centrally procured on demand. |
| | XA | Item is not procured or stocked because the requirements for the item will result in the replacement of the next higher assembly |
| | XC | Installation drawing, diagram, instruction sheet, or field Service drawing, that is identified by the manufacturers' part number. |
| Third Position *Maintenance Codes* | C | Support item is removed, replaced, used by the operator/crew. |
| | O | Support item is removed, replaced, or used at the Technician Maintenance level. |
| | K | Repairable item. Item is removed, replaced, or used at contractor facility. |
| Fourth Position *Repair Codes* | C | The lowest maintenance activity capable of complete repair of the support item is the operator/crew. |
| | O | The lowest maintenance activity capable of complete repair of the support item is the Technician Maintenance level. |
| | K | Repairable support item. Complete repair capability exists at a designated contractor facility. |
| | Z | Non-repairable. |
| Fifth Position *Recoverability Codes* | C | Repairable item. When uneconomically repairable, condemn and disposed by the operator/crew. |
| | Z | Non-repairable item. When item becomes unserviceable, condemn and disposed of by authorized activity. |
| | O | Repairable item. When uneconomically repairable, condemn and dispose at organizational activity. |
| | K | Repairable item. Condemnation and disposal to be performed at contractor facility. |

6.2 **GENERAL FORMAT**

6.2.1 The PPB must be prepared as an MS Excel spreadsheet, formatted IAW D-01-100-214/SF-000, excepted where superseded by Table 1 above.

6.3 **HARD COPY FORMAT**

6.3.1 The PPB must be printed on paper with these characteristics:

6.3.1.1 Standard US Ledger size (432 mm x 279 mm)

6.3.1.2 Weight of no less than 90 gsm;

6.3.1.3 Brightness of no less than 92 ISO brightness;

6.4 **SOFT COPY FORMAT**

6.4.1 The PPB must be provided as an MS Excel Spreadsheet file.

6.4.2 **Soft Copy format submission size below 7MB** – The PPB may be submitted via email as follows:

6.4.2.1 To Field: As per the related CDRL section 9.A. Addressee, as identified in the contract.

6.4.2.2 Subject Field: WTT-ILS-209 – PPB – Rev [#] – [Date of Issue]

6.4.3 **Soft Copy format submission size at or above 7MB** - The PPB file must be submitted on CD or DVD media and be labelled as follows:

6.4.3.1 Water Tank Trailer

6.4.3.2 Provisioning Parts Breakdown;

6.4.3.3 WTT-ILS-209;

6.4.3.4 The Revision number, and

6.4.3.5 The date of issue.

## A4.18 DID – Supplementary Provisioning Technical Documentation

| DATA ITEM DESCRIPTION | |
|---|---|
| 1. TITLE<br>**Supplementary Provisioning Technical Documentation** | 2. IDENTIFICATION NUMBER<br>DID WTT-ILS-210 |
| 3. DESCRIPTION<br>The Supplementary Provisioning Technical Documentation (SPTD) fully identifies and describes part(s) that may be catalogued. | |
| 4. RELATED DOCUMENTS<br>**D-01-100-214/SF-000** *Specification for Preparation of Provisioning Documentation for Canadian Forces Equipment*<br>**D-01-400-001/SG-000** *Standard - Engineering Drawing Practices* | 5. CONTRACT REFERENCE<br>SOW: **Para. 5.4.3.2.1 (pg. 17)**<br>CDRL: **App. A3.18 (pg. 54)** |

6. **PREPARATION INSTRUCTIONS**

6.1. **CONTENT**

6.1.1. The Supplementary Provisioning Technical Documentation (SPTD) must be provided for each item appearing on the Provisioning Documentation as follows:

6.1.1.1. The SPTD must include the technical data required for DND to classify and fully describe the item within the NATO codification system, allowing for item identification for cataloguing purposes.

6.1.1.2. Key elements of good SPTD:

6.1.1.2.1. Displays the true manufacturing company's logo & address (or NCAGE), and MRN (see D-01-100-214/SF-000 for definitions).

6.1.1.2.2. Lists characteristic data about the item, such as:

6.1.1.2.2.1. Configuration;

6.1.1.2.2.2. Physical characteristics, such as dimensions, tolerances, materiel, mandatory processes, surface finish, protective coatings, etc.;

6.1.1.2.2.3. Electrical characteristics;

6.1.1.2.2.4. Performance data;

6.1.1.2.2.5. Special features which contribute to the uniqueness of the item, especially for common items modified to a particular standard of performance, etc.

6.1.1.2.3. Clearly shows the item in question.

6.1.1.2.4. Shows where the item fits in the next higher assembly (where practical).

6.2. **GENERAL FORMAT**

6.2.1. The SPTD must be prepared as a high-contrast line drawing(s) or with good quality photograph(s) within a Technical Datasheet.

6.2.1.1. If prepared as a drawing, the SPTD must follow the drawing format of D-01-400-001/SG-000 section 7.3, with attached parts lists (for assemblies), so that DND can ensure that the Provisioning Documentation reflects the current and complete configuration of the equipment being produced.

6.3. **HARD COPY FORMAT**

6.3.1. The SPTD must be printed on US Letter, Legal, or Ledger-size paper, as appropriate, with these characteristics:

6.3.1.1. Weight of no less than 90 gsm;

6.3.1.2. Brightness of no less than 92 ISO brightness;

6.4. **SOFT COPY FORMAT**

6.4.1. The SPTD must be submitted in PDF file type, with filenames resolved in the following format: (MRN)_(NCAGE)_(item name).pdf. Special characters inadmissible in a file name must be replaced with a dash (-).

6.4.2. **Soft Copy format submission size below 7MB** – The SPTD PDFs may be submitted via email as follows:

6.4.2.1. To Field: As per the related CDRL section 9.A. Addressee, as identified in the contract.

6.4.2.2. Subject Field: WTT-ILS-210 – SPTD – Rev [#] – [Date of Issue]

6.4.3. **Soft Copy format submission size at or above 7MB** – The SPTD PDFs must be submitted on CD or DVD media and be labelled as follows:

6.4.3.1. Water Tank Trailer

6.4.3.2. SPTD;

6.4.3.3. WTT-ILS-210;

6.4.3.4. The Revision number, and

6.4.3.5. The date of issue.

## A4.19 **DID – Identification Plates – Design Template & Populated Designs**

| DATA ITEM DESCRIPTION | |
|---|---|
| 1. TITLE<br>**Identification Plates – Design Template & Populated Designs** | 2. IDENTIFICATION NUMBER<br>DID WTT-ILS-211 |
| 3. DESCRIPTION<br>The Identification Plates uniquely identify equipment and components and spares based on the procedures governing the identification marking of Canadian military property. | |
| 4. RELATED DOCUMENTS<br>**D-02-002-001/SG-001** *Canadian Forces Standard Identification Marking of Canadian Military Property*<br>**D-01-400-002/SF-000** *Specification - Levels of Engineering Drawings* | 5. CONTRACT REFERENCE<br>SOW: **Para. 5.6.1 (pg. 18)**<br>CDRL: **App. A3.19 (pg. 55)** |

6. PREPARATION INSTRUCTIONS

6.1. **CONTENT AND GENERAL FORMAT**

6.1.1. In accordance with D-02-002-001/SG-001, the Identification Plates affixed to each item included in ANNEX D SOW para 5.6.2 must be of size, format, and construction appropriate for the item being identified, and contain the data required for those Identification Plate formats in both official languages.

6.1.2. The Identification Plates Design Template & Populated Designs must be prepared as representative Level 2 drawings as defined in D-01-400-002/SF-000, with emphasis put on the dimensions and spacing of the typeface used.

6.1.2.1. The Level 2 drawings must include the mounting or installation method for each Identification Plate, with any fasteners described by size, and/or technical standard, and/or NSN, and quantity; and any adhesive or glue described by type and strength.

6.2. **HARD COPY FORMAT**

6.2.1. The Identification Plates Design Template & Populated Designs must be:

6.2.1.1. Printed in 1:1 scale;

6.2.1.2. Printed on Standard US Ledger size paper (432 mm x 279 mm), with a:

6.2.1.2.1. Weight of no less than 90 gsm;

6.2.1.2.2. Brightness of no less than 92 ISO brightness;

6.3. **SOFT COPY FORMAT**

6.3.1. The Identification Plate Design Templates & Populated Designs must be provided as PDF files, named by “Item Name”_Part Number.

6.3.2. The Identification Plates Design Template and Populated Designs PDFs containing text and illustrations in landscape, must be rotated for electronic viewing and reading in landscape.

6.3.3. **Soft Copy format submission size below 7MB** – The Identification Plates Design Template & Populated Designs may be submitted via email as follows:

6.3.3.1. To Field: As per the related CDRL section 9.A. Addressee, as identified in the contract.

6.3.3.2. Subject Field: WTT-ILS-211 – Identification Plates –Rev [#] – [Date of Issue]

6.3.4. **Soft Copy format submission size at or above 7MB** – The Identification Plates Design Template & Populated Designs file must be submitted on CD or DVD media and be labelled as follows:

6.3.4.1. Water Tank Trailer

6.3.4.2. Identification Plates

6.3.4.3. WTT-ILS-211;

6.3.4.4. The Revision number, and

6.3.4.5. The date of issue.

## A4.20 **DID – Controlled & Non-Controlled Goods List**

| DATA ITEM DESCRIPTION | |
|---|---|
| 1. TITLE<br>**Controlled & Non-Controlled Goods List (CNCGL)** | 2. IDENTIFICATION NUMBER<br>DID WTT-ILS-212 |
| 3. DESCRIPTION<br>Controlled Goods Items – The CNCGL identifies if the controlled goods end items, components and sub-components of the equipment are specifically designed and modified for military purpose, and provides the Demilitarization Instructions if required.<br>Non-Controlled Goods Items – The CNCGL still includes non-controlled goods end items, components and sub-components of the equipment, as they will still require a DMC assignment. | |
| 4. RELATED DOCUMENTS<br>**C-02-007-000/AG-001** *Controlled Technology Access and Transfer (CTAT) Manual* | 5. CONTRACT REFERENCE<br>SOW: **Para. 5.6.1 (pg. 19)**<br>CDRL: **App. A3.20 (pg. 56)** |

6. PREPARATION INSTRUCTIONS

6.1. **CONTENT**

6.1.1. The CNCGL must identify end items accordingly, IAW C-02-007-000/AG-001:

6.1.1.1. For Canadian origin items, Canada's Export Control List (ECL) articles that apply in accordance with the Defence Product Act (DPA);

6.1.1.2. For US origin dual use, the Export Control Classification Number (ECCN) of the Commerce Control List that applies;

6.1.1.3. For US origin controlled goods also known as defence articles, the United States Munitions List (USML) Category and paragraph that apply in accordance with the International Traffic in Arms Regulations (ITAR);

6.1.1.4. For all other countries other than Canada and the USA, the category and article of the Wassenaar Control List that applies, and

6.1.1.5. All items require a Demilitarization Code (DMC).

6.2. **GENERAL FORMAT**

6.2.1. The CNCGL must be in spreadsheet format with 6 columns:

6.2.1.1. Item name;

6.2.1.2. Manufacturer's Reference Part Number;

6.2.1.3. Ref para for Canadian origin items (ECL);

6.2.1.4. Ref para for US origin controlled goods (USML);

6.2.1.5. Demilitarization Code (DMC);

6.2.1.6. Formal Demilitarisation Instructions, if DMC is F;

6.2.1.7. Remarks.

6.3. **HARD COPY FORMAT**

6.3.1. The CNCGL must be printed on paper with these characteristics:

6.3.1.1. Weight of no less than 90 gsm;

6.3.1.2. Brightness of no less than 96 ISO brightness;

6.4. **SOFT COPY FORMAT**

6.4.1. The CNCGL must be provided as an MS Excel Spreadsheet file.

6.4.2. **Soft Copy format submission size below 7MB** – The CNCGL may be submitted via email as follows:

6.4.2.1. To Field: As per the related CDRL section 9.A. Addressee, as identified in the contract.

6.4.2.2. Subject Field: WTT-ILS-212 – CNCGL – [Rev #] – [Date of Issue]

6.4.3. **Soft Copy format submission size at or above 7MB** – The CNCGL file must be submitted on CD or DVD media and be labelled as follows:

6.4.3.1. Water Tank Trailer

6.4.3.2. CNCGL

6.4.3.3. WTT-ILS-212;

6.4.3.4. The Revision number, and

6.4.3.5. The date of issue.

## A4.21 DID – Identification Labels for Storage and Shipment, and Packaging Codes

| DATA ITEM DESCRIPTION | |
|---|---|
| 1. TITLE<br>**Identification Labels for Storage and Shipment, and Packaging Codes** | 2. IDENTIFICATION NUMBER<br>DID WTT-ILS-213 |
| 3. DESCRIPTION<br>The Identification Labels for Storage and Shipment, and Packaging Codes ensures that the labelling used to identify packages for items procured by DND and shipped to and stored at a Canadian facility comply with CAF Specifications. As well, this will allow DND to obtain a complete record of packaging codes for catalogued items of the equipment. | |
| 4. RELATED DOCUMENTS<br>**D-LM-008-011/SF-001** *Preparation and Use of Packaging Requirements Codes*<br>**D-LM-008-002/SF-001** *Specification for Marking for Storage and Shipment*<br>**D-01-400-002/SF-000** Specification - *Levels of Engineering Drawings* | 5. CONTRACT REFERENCE<br>SOW: **Para. 5.8.3 (pg. 19)**<br>CDRL: **App. A3.21 (pg. 57)** |

6. PREPARATION INSTRUCTIONS

6.1. **CONTENT AND GENERAL FORMAT**

6.1.1. The Packaging Label designs, populated with the appropriate data, must be provided as Level 1 drawings (see D-01-400-002/SF-000) and include dimensions to show the measurements as defined by D-LM-008-002/SF-001 (example: text size, bar code dimensions).

6.1.2. Items that require special packaging, packing, or preservation considerations to meet the required protection level (see 5.8.1 of the SOW) require a CF271 form filled as per D-LM-008-011/SF-001 (see Table 1 below). A separate CF271 form is to be submitted electronically for each item. The files' names must correspond to the item listed within, either by its part number, NSN if available, detailed item name, etc.

6.2. **HARD COPY FORMAT**

6.2.1. The Packaging Label designs must be printed on paper with these characteristics:

6.2.1.1. Standard US Ledger size (432 mm x 279 mm)

6.2.1.2. Weight of no less than 90 gsm;

6.2.1.3. Brightness of no less than 96 ISO brightness;

6.3. **SOFT COPY FORMAT**

6.3.1. The Packaging Labels must be provided as PDF files.

6.3.2. The Packaging Labels PDFs containing text and illustrations in landscape, must be rotated for electronic viewing and reading in landscape.

6.3.3. The Packaging Codes must be provided as an MS Excel Spreadsheet file.

6.3.4. **Soft Copy format submission size below 7MB** – The Identification Labels for Storage and Shipment, and Packaging Codes may be submitted via email as follows:

6.3.4.1. To Field: As per the related CDRL section 9.A. Addressee, as identified in the contract.

6.3.4.2. Subject Field: WTT-ILS-213 – Identification Labels for Storage and Shipment, and Packaging Codes – [Rev #] – [Date of Issue]

6.3.5. **Soft Copy format submission size at or above 7MB** – The Identification Labels for Storage and Shipment, and Packaging Codes files must be submitted on CD or DVD media and be labelled as follows:

6.3.5.1. Water Tank Trailer

6.3.5.2. Identification Labels for Storage and Shipment, and Packaging Codes

6.3.5.3. WTT-ILS-213;
6.3.5.4. The Revision number, and
6.3.5.5. The date of issue.

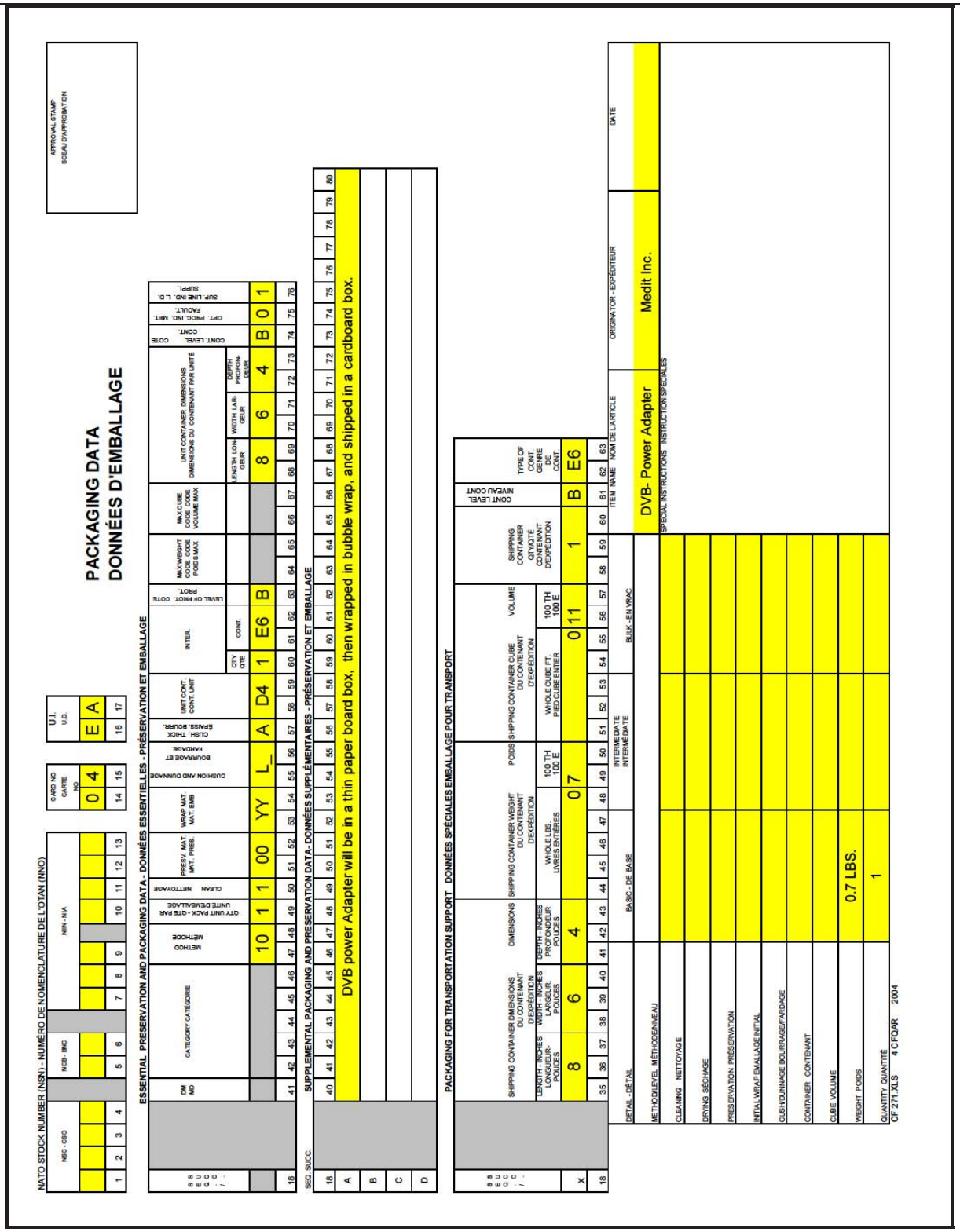


**Table 1: Sample CF271 form**

## A4.22 **DID – Repair and Overhaul Plan**

| DATA ITEM DESCRIPTION | |
|---|---|
| 1. TITLE<br>**Repair and Overhaul Plan** | 2. IDENTIFICATION NUMBER<br>DID WTT-ILS-214 |
| 3. DESCRIPTION<br>The Repair and Overhaul Plan (R&O Plan) provides R&O planning information for the equipment once it's in-service and is sent back for repairs. | |
| 4. RELATED DOCUMENTS | 5. CONTRACT REFERENCE<br>SOW: **Para. 5.9.1 (pg. 19)**<br>CDRL: **App. A3.22 (pg. 58)** |

6. PREPARATION INSTRUCTIONS

6.1. **CONTENT**

6.1.1. The R&O Plan must the following information:

6.1.1.1. Item Number (unique sequence no. for each list);

6.1.1.2. Item Name;

6.1.1.3. Manufacturer's Reference Part number;

6.1.1.4. NCAGE Code;

6.1.1.5. NATO Stock Number (if available);

6.1.1.6. Wear out Life;

6.1.1.7. Designated Rework Point.

6.1.2. For each item requiring Repair and Overhaul, provide a Technical Data List identifying the technical data needed by the Repair and Overhaul facility. These data may consist of, for example, overhaul task descriptions, repair schemes, test procedures and modifications to be incorporated.

6.2. **GENERAL FORMAT**

6.2.1. The R&O Plan must be prepared as an MS Excel spreadsheet.

6.3. **HARD COPY FORMAT**

6.3.1. The R&O Plan must be printed on paper with these characteristics:

6.3.1.1. Weight of no less than 90 gsm;

6.3.1.2. Brightness of no less than 92 ISO brightness;

6.4. **SOFT COPY FORMAT**

6.4.1. The R&O Plan must be provided as an MS Excel Spreadsheet file.

6.4.2. **Soft Copy format submission size below 7MB** – The R&O Plan may be submitted via email as follows:

6.4.2.1. To Field: As per the related CDRL section 9.A. Addressee, as identified in the contract.

6.4.2.2. Subject Field: WTT-ILS-214 – R&O Plan – Rev [#] – [Date of Issue]

6.4.3. **Soft Copy format submission size at or above 7MB** – The R&O Plan file must be submitted on CD or DVD media and be labelled as follows:

6.4.3.1. Water Tank Trailer

6.4.3.2. R&O Plan

6.4.3.3. WTT-ILS-214;

6.4.3.4. The Revision number, and

6.4.3.5. The date of issue.

## A4.23 **DID - Warranty Support Plan**

| DATA ITEM DESCRIPTION | |
|---|---|
| 1. TITLE<br>**Warranty Support Plan** | 2. IDENTIFICATION NUMBER<br>DID WTT-ILS-215 |
| 3. DESCRIPTION<br>To identify/document the elements that composes the Warranty Support for the WTT, and to provide the framework and strategy to meet Warranty Support obligations. | |
| 4. RELATED DOCUMENTS<br>**C-01-100-100/AG-008** *Writer's Guide for Technical Documentation* | 5. CONTRACT REFERENCE<br>SOW: **Para. 5.10.1 (pg. 19)**<br>CDRL: **App. A3.23 (pg. 59)** |

6. PREPARATION INSTRUCTIONS

6.1. **CONTENT**

6.1.1. The Warranty Support Plan's (WSP) subject matter must include, but not be limited to, a detailed discussion on the following:

6.1.1.1. An introduction with a stated purpose and scope.

6.1.1.2. A description of the warranty section. A key point of contact for warranty support matters must be identified.

6.1.1.3. Detailed summary of what is covered under the WTT's standard warranty, including applicable terms and conditions, such as parts and labour, time, usage, and maintenance servicing requirements.

6.1.1.4. Complete warranty control procedures including, but not necessarily limited to, the following:

6.1.1.4.1. Interfacing actions between Contractor and Canada for initiating a warranty action and shipping instructions;

6.1.1.4.2. Procedures followed for the evaluation of defective warrantable items, including ILS publications;

6.1.1.4.3. Procedures to be followed where warranty claims are not substantiated, but DND elects to have the item repaired and returned to service by the Contractor;

6.1.1.4.4. Details relating to the Contractor's disposal of unserviceable warrantable components;

6.1.1.4.5. All costs that are associated with the program must be identified, including a method of compensating DND for effecting warranty repairs on the Contractor's behalf;

6.1.1.4.6. How the Contractor will notify Canada of recalls, emerging safety issues, and other urgent matters the Contractor gains knowledge of concerning the Work.

6.1.1.4.7. How the Contractor will report and correct discrepancies or amend information within the ILS documentation and the dissemination of those amendments and corrections; and,

6.1.1.4.8. How the Contractor will report all closed warranty claims and the status of open claims.

6.1.1.5. Terms and conditions of the packaging warranty coverage;

6.1.1.6. Details of the process to be followed to action a warranty claim for repairs performed by the Contractor;

6.1.2. Each topic of discussion must clearly identify any documentation or information required from DND.

6.1.2.1. Templates of Contractor-generated forms that are to be filled out by DND for any Warranty Action must be included in the WSP.

6.1.3. Any documentation used in Warranty Support activities must be identified and included as part of the WSP.

6.2. **GENERAL FORMAT**

6.2.1. The WSP must be prepared in the Contractor's format.

6.3. **HARD COPY FORMAT**

6.3.1. The WSP must be printed on paper with these characteristics:

6.3.1.1. Weight of no less than 90 gsm;

6.3.1.2. Brightness of no less than 92 ISO brightness;

6.4. **SOFT COPY FORMAT**

6.4.1. **Soft Copy format submission size below 7MB** – The WSP may be submitted via email as follows:

6.4.1.1. To Field: As per the related CDRL section 9.A. Addressee, as identified in the contract.

6.4.1.2. Subject Field: WTT-ILS-215 – WSP – Rev [#] – [Date of Issue]

6.4.2. **Soft Copy format submission size at or above 7MB** – The WSP file must be submitted on CD or DVD media and be labelled as follows:

6.4.2.1. Water Tank Trailer

6.4.2.2. Warranty Support Plan

6.4.2.3. WTT-ILS-215;

6.4.2.4. The Revision number, and

6.4.2.5. The date of issue.

## A4.24 DID - Contract Delivery Status Report – Spares

| DATA ITEM DESCRIPTION | |
|---|---|
| 1. TITLE<br>**Contract Delivery Status Report - Spares** | 2. IDENTIFICATION NUMBER<br>DID WTT-ILS-216 |
| 3. DESCRIPTION<br>The Contract Delivery Status Report – Spares (CDSR-S) will report on the Delivery Status of Ordered Spares and to identify and correct any problems which will adversely affect their timely delivery. | |
| 4. RELATED DOCUMENTS | 5. CONTRACT REFERENCE<br>SOW: **Para. 5.4.3.3.1 (pg. 18)**<br>CDRL: **App. A3.24 (pg. 60)** |

6. PREPARATION INSTRUCTIONS

6.1. **CONTENT**

6.1.1. The CDSR-S must contain the data requested through the column headers of Table 1 shown below, and any added by the Contractor (see 6.2.1).

6.2. **GENERAL FORMAT**

6.2.1. The CDSR-S must be prepared in a Microsoft Excel spreadsheet containing at least the data columns shown in Table 1 below. At their discretion, the Contractor may add relevant data columns for their purposes and any they believe will be useful in monitoring and reporting the delivery status of spares.

6.2.2. Line items in the CDSR-S must be grouped by part number or NSN, as applicable.

**Table 1**

**Contract Delivery Status Report - Spares**

| | | | |
|---|---|---|---|
| **Contract Number:** | **W8476-XXXX** | **Report Date:** | **30/04/2018** |
| **Task Number:** | **(Agreed to with CA)** | **Next Report Date:** | **25/05/2018** |

| Line No | Part Description | NSN (if n/a, Part Number) | Qty Ordered | Batch QTY | Anticipated Shipping Date | Date Shipped | Invoice Number | % Satisfied | Total % Satisfied | Status Notes |
|---|---|---|---|---|---|---|---|---|---|---|
| 1 | Wheel Bearing | 1000-21-123-1234 | 100 | 30 | 17/04/2018 | 15/04/2018 | MMN00272 | 30 | 30 | Invoice to be sent 30/05/2018 |
| | | | | 30 | 28/05/2018 | | | 30 | | On track to deliver. |
| | | | | 40 | 16/06/2018 | | | 40 | | On track to deliver. |
| | | | | | | | | | | |
| 2 | Seal Kit | 234-AGEER-2 | 200 | 50 | 17/04/2018 | | | | | Item on back order at supplier - Alternate sources being sought. |
| | | | | 75 | 28/05/2018 | | | | | Subject to back order status as above. |
| | | | | 75 | 16/06/2018 | | | | | Subject to back order status as above. |

6.3. **SOFT COPY FORMAT**

6.3.1. The CDSR-S must be provided as an MS Excel Spreadsheet file.

6.3.2. **Soft Copy format submission size below 7MB** – The CDSR-S may be submitted via email as follows:

6.3.2.1. To Field: As per the related CDRL section 9.A. Addressee, as identified in the contract.

6.3.2.2. Subject Field: WTT-ILS-216 – CDSR-S – Rev [#] – [Date of Issue]

6.3.3. **Soft Copy format submission size at or above 7MB** – The CDSR-S file must be submitted on CD or DVD media and be labelled as follows:

6.3.3.1. Water Tank Trailer

6.3.3.2. Contract Delivery Status - Spares

6.3.3.3. WTT-ILS-216

6.3.3.4. (The Report's Date)

## A4.25 **DID - Contract Delivery Status Report – WTT**

| DATA ITEM DESCRIPTION | |
|---|---|
| 1. TITLE<br>**Contract Delivery Status Report - WTT** | 2. IDENTIFICATION NUMBER<br>DID WTT-ILS-217 |
| 3. DESCRIPTION<br>The Contract Delivery Status Report – WTT (CDSR-WTT) will report on the Delivery Status of the Water Tank Trailers and to identify and correct any problems which will adversely affect their timely delivery. | |
| 4. RELATED DOCUMENTS | 5. CONTRACT REFERENCE<br>SOW: **Para. 5.4.3.4.1 (pg.18)**<br>CDRL: **App. A3.25 (pg. 61)** |

6. PREPARATION INSTRUCTIONS

6.1. **CONTENT**

6.1.1. The CDSR-WTT must contain the data requested through the column headers of Table 1 shown below, and any added by the Contractor (see 6.2.1).

6.2. **GENERAL FORMAT**

6.2.1. The CDSR-WTT must be prepared in a Microsoft Excel spreadsheet containing at least the data columns shown in Table 1 below. At their discretion, the Contractor may add relevant data columns for their purposes and any they believe will be useful in monitoring and reporting the delivery status of spares.

6.2.2. Line items in the CDSR-WTT must be grouped by destination (Canadian Forces Supply Depots).

6.3. **SOFT COPY FORMAT**

6.3.1. The CDSR-WTT must be provided as an MS Excel Spreadsheet file.

6.3.2. **Soft Copy format submission size below 7MB** – The CDSR-WTT may be submitted via email as follows:

6.3.2.1. To Field: As per the related CDRL section 9.A. Addressee, as identified in the contract.

6.3.2.2. Subject Field: WTT-ILS-217 – CDSR-WTT – Rev [#] – [Date of Issue]

6.3.3. **Soft Copy format submission size at or above 7MB** – The CDSR-WTT file must be submitted on CD or DVD media and be labelled as follows:

6.3.3.1. Water Tank Trailer

6.3.3.2. Contract Delivery Status - WTT

6.3.3.3. WTT-ILS-217

6.3.3.4. The Report's Date

Table 1

## Contract Delivery Status Report - WTT

| | | | | | | |
|---|---|---|---|---|---|---|
| | | Contract Number: | W8476-XXXX | | Report Date: | 28/05/2018 |
| | | WTT NSN: | 1000-21-789-7890 | | Next Report: | 26/06/2018 |

| Destination | Line No. | VIN (or S/N) | Status | Anticipated Ship Date: | Actual Ship Date: | Notes |
|---|---|---|---|---|---|---|
| Edmonton (7CFSD) | 1 | 2ASD-100 | Shipped | 25/05/2018 | 26/05/2018 | Invoice # L1022, 30/05/2018 |
| | 2 | 2ASD-101 | Ready to ship | 01/06/2018 | | Invoice # L1024, 09/06/2018 |
| | 3 | 2ASD-102 | Ready to ship | 01/06/2018 | | Invoice # L1024, 09/06/2018 |
| | 4 | 2ASD-103 | In Production | 16/06/2018 | | |
| | 5 | 2ASD-104 | In Production | 16/06/2018 | | |
| | 6 | 2ASD-105 | In Production | 16/06/2018 | | |
| | 7 | 2ASD-106 | In Production | 16/06/2018 | | |
| | 8 | 2ASD-107 | In QA | 10/06/2018 | | On track to ship |
| | 9 | 2ASD-108 | In QA | 10/06/2018 | | On track to ship |
| Montreal (25CFSD) | 10 | 2ASD-109 | Prod: July 2018 | 18/08/2018 | | May be delayed due to part back order |
| | 11 | 2ASD-110 | Prod: July 2018 | 18/08/2018 | | May be delayed due to part back order |
| | 12 | 2ASD-111 | Prod: July 2018 | 18/08/2018 | | May be delayed due to part back order |
| | 13 | 2ASD-112 | Prod: July 2018 | 18/08/2018 | | May be delayed due to part back order |
| | 14 | 2ASD-113 | Prod: Aug 2018 | 23/09/2018 | | |
| | 15 | 2ASD-114 | Prod: Aug 2018 | 23/09/2018 | | |
| | 16 | 2ASD-115 | Prod: Aug 2018 | 23/09/2018 | | |
| | 17 | 2ASD-116 | Prod: Aug 2018 | 23/09/2018 | | |

# BID EVALUATION PLAN

# FOR THE

# WATER TANK TRAILER

# CAPITAL PROCUREMENT

NOTICE

This documentation has been reviewed by the technical authority and does not contain controlled goods. Disclosure notices and handling instructions originally received with the document must continue to apply.

AVIS

Cette documentation a été révisée par l'autorité technique et ne contient pas de marchandises contrôlées. Les avis de divulgation et les instructions de manutention reçues originalement doivent continuer de s'appliquer.

## TABLE OF CONTENTS

## 1.0 General

### 1.1 Introduction

1.1.1 This document describes the bid evaluation procedure and how it will be used in order to determine the winning bid for the procurement of the Water Tank Trailer (WTT).

### 1.2 Responding to Evaluation Criteria

1.2.1 For each listed requirement in column 1 (M1 to M11) and described in column 3, of table at para 2.3, the Contractor must provide a clear response in the space provided in column 5 (Contractor's Response/References) In many cases, simply stating that the requirement is met, will not be sufficient, and details of how the requirement is met and supporting documents are required. This can be achieved by including the specific reference to indicate where in the proposal the information is found or, based on the length of the response, including the complete response directly in that column.

1.2.2 Contractors must provide the information required for each listed requirement in accordance with the method identified in column 4. Compliance Documentation required column.

1.2.3 The following compliance methods, as indicated in column 4, "Compliance Documentation Required" define the information required of the contractor against each requirement:

1.2.3.1 Compliance Statement (CS) - Where "CS" is identified the Contractor must simply provide a statement which describe in detail how the equipment offered fully complies with the requirement.

1.2.3.2 Supporting Documentation (SD) – Where "SD" is identified, the description of what type of SD is required will be given in column 3. Some examples are:

1.2.3.2.1 Test Report (TR) - Where TR is identified, in order to confirm that the equipment fully complies with the requirement, the contractor must provide a detailed Test Report (including the test procedures, data and results) for tests conducted on the equipment offered,

1.2.3.2.2 Resume (CV) – Where CV is listed, the CV of those responsible to perform the work described in column 3 is required,

1.2.3.3 Any document that is referenced in a compliance statement must be included as part of the bid submission.

## 2.0 Bid Evaluation

### 2.1 Bid Selection Methodology

2.1.1 It is Canada's desire to achieve an optimal capability at lowest cost. Therefore, a "Lowest Cost Compliant" approach will be employed for this acquisition process, and selection of the winning proposal will be based on the proposed lowest cost provided that the proposal meets all mandatory requirements.

2.1.2 PSPC who represents the Contracting Authority (CA) will screen the bids for completeness, misplaced financial information and compliance with the general terms and conditions. The technical section of the compliant bids will then be provided to the Bid Evaluation Team for evaluation of technical compliance.

2.1.3 All valid bids will be evaluated against key mandatory requirements, detailed in the table at Para 2.3.

### 2.2 Technical Evaluation of Compliance

2.2.1 Evaluation of Key Mandatory Requirements

2.2.1.1 The evaluation team will use the Contractor's submitted proposal to determine compliance against key mandatory requirements.

2.2.2 Subject Matter Experts

2.2.2.1 DND may draw from experienced operators and/or members of the DND scientific community.

2.2.3 Assessment

2.2.3.1 While DND will not be seeking to verify all specifications, if any mandatory requirement is discovered to be non-compliant during the evaluation process, the bid will be deemed non-compliant and will be removed from the bidding process.

2.2.3.2 Results of compliance and Non-compliance will be provided through PSPC.

2.2.3.3 Only technically compliant proposals will undergo financial evaluation in order to determine the winning proposal by the Contracting Authority.

2.2.4 For the purpose of this solicitation, a “Team Member” or “Bidder’s Team” is the entity whose experience is being used to meet the evaluation criteria of this bid.

2.2.4.1 Where a Bidder cites the experience of a Team Member, Canada will only consider this experience if the experience is accessible to the Bidder and the Bidder can rely upon and use the experience in the performance of any resulting Contract. The Bidder is required to demonstrate this accessibility through the certification that teaming agreement(s) are in place at the time of bid closure.

2.2.4.2 Experience listed without providing any supporting data to describe where, how and by whom such experience was obtained, or failure to demonstrate that the Bidder has a teaming agreement with the Team Member whose experience satisfies the requirement(s) may result in that experience not being considered for evaluation purposes.

## 2.3 Evaluation of Key Mandatory Requirements

| 1. | 2. Key Requirement Criteria with References as applicable | 3. Requirement Description | 4. Compliance Documentation Required: CS – Compliance Statement SD – supporting documents | 5. Contractor's Response - References | For Bid Evaluation Team only) | |
|---|---|---|---|---|---|---|
| | | | | | "C" | "NC" |
| M1 | SOW, Para 3.1.1 | The Bidder must hold the internationally recognized Quality Management System (QMS) standard, ISO 9001<br><br>Supporting Documentation: A copy of the ISO 9001 Quality Management certification | CS and SD | | | |
| M2 | SOW, Para 3.3.2.2. | Bidder must submit conceptual drawings, and specification sheets for their proposed WTT.<br><br>Supporting Documentation: The drawings and specification sheets must illustrate and detail all components and subcomponents listed in the WTT SOW. | CS and SD | | | |
| M3 | SOW, Para A1.1.1.2 | The manufacturer of the WTT must be registered as a commercial importer with Transport Canada (TC).<br><br>Supporting Documentation: A copy of the TC commercial importer registration. | CS and SD | | | |

| 1. | 2. Key Requirement Criteria with References as applicable | 3. Requirement Description | 4. Compliance Documentation Required: CS – Compliance Statement SD – supporting documents | 5. Contractor's Response - References | For Bid Evaluation Team only) | |
|---|---|---|---|---|---|---|
| | | | | | "C" | "NC" |
| M4 | Proven Capability | The bidder must possess a minimum of 10 years of experience in designing and producing fleets of heavy trailers. A minimum of two (2) such fleets is required, (ten (10) or more/fleet, and being of three (3) ton GTW or more).<br><br>Supporting Documentation: Details of such fleets, (pictures, designs, size, weight, number of units) including contact info of purchasers are required. | CS and SD | | | |
| M5 | Proven Capability | The manufacturing facilities must be of sufficient size and capacity to produce a minimum of ten (10) WTT per month.<br><br>Supporting Documentation:<br>• Square footage of shop area(s),<br>• Square footage of storage yard(s),<br>• Number of manufacturing bays,<br>• Photos and drawings,<br>• Production and Delivery schedule. | CS and SD | | | |

| 1. | 2. Key Requirement Criteria with References as applicable | 3. Requirement Description | 4. Compliance Documentation Required:<br>CS – Compliance Statement<br>SD – supporting documents | 5. Contractor's Response - References | For Bid Evaluation Team only) | |
|---|---|---|---|---|---|---|
| | | | | | "C" | "NC" |
| M6 | Contract Project Management | The Bidder must demonstrate it has a qualified Project Manager with a minimum of ten (10) years of experience. Experiences listed must demonstrate qualification to perform duties required.<br><br>Supporting Documentation: Curriculum vitae (CV) listing diplomas, Project Management qualifications and certifications including PMP, details of work experience as well as duration. | CS and SD | | | |
| M7 | Contract Project Management | The Bidder must demonstrate it has qualified Head Engineer with a minimum of ten (10) years of experience.<br><br>Supporting Documentation: Curriculum vitae (CV) listing diplomas, qualifications and certifications including P. Eng, details of work experience as well as duration. | CS and SD | | | |

| 1. | 2. Key Requirement Criteria with References as applicable | 3. Requirement Description | 4. Compliance Documentation Required: CS – Compliance Statement SD – supporting documents | 5. Contractor's Response - References | For Bid Evaluation Team only) | |
|---|---|---|---|---|---|---|
| | | | | | "C" | "NC" |
| M8 | SOW Para A1.2.3.3.1 | The Air Braking System for the WTT must be compliant with Transport Canada's Technical Standards Document 121.<br><br>Supporting Documentation:<br>A Test Report showing compliancy of system designed for the WTT. | CS and SD | | | |
| M9 | SOW Para A1.2.3.5.1 | The Trailer Lighting System must be compliant with STANAG 2601 ED.3.<br><br>Supporting Documentation:<br>A Test Report showing compliancy of system designed for the WTT. | CS and SD | | | |
| M10 | Sow Para A1.2.2 | The Water Heating System for WTT must already be in production and be able to meet the requirements of para A1.2.2.8.<br><br>Supporting Documentation:<br>Specification sheet showing power and fuel requirements/output heat and power usage of existing currently employed system that meets this requirement. | CS and SD | | | |

Table 1-1

WTS SOW: MANDATORY COMPLETION OF EACH PRICE "BOX". IF THERE IS NO COST PLEASE INSERT "0" or Nil.

| Item # | Item Description | Qty | Unit price | Total price |
|---|---|---|---|---|
| 1 | Water Treatment Unit (para. A1.2.1) | 70 | | |
| 2 | Miscellaneous Equipment Unit (para. A1.2.2) | 70 | | |
| 3 | Arctic Sustainment Unit (para. A1.2.3) | 13 | | |
| 4 | Water Storage Unit (para A1.2.4) | 40 | | |
| 5 | Trailer (para. A1.2.5) | 70 | | |
| 6 | Project Management Plan (para. 3.2) | LOT | | |
| 7A | Contract Master Schedule - Initial Submission (para. 3.3) | LOT | | |
| 7B | Contract Master Schedule - Final Submission (para. 3.3) | LOT | | |
| 8 | Contract Work Breakdown Structure (para 3.4) | LOT | | |
| 9A | Contract Status Report - Initial Submission (para 3.5) | LOT | | |
| 9B | Contract Status Report - Final Submission (para 3.5) | LOT | | |
| 10 | Kick-off, Systems Engineering and ILS Meetings (para. 3.6.2 - 3.6.4) | 1 | | |
| 11 | Meeting Agenda (para. 3.6.6.1.1) | LOT | | |
| 12 | Meeting Minutes (para. 3.6.6.1.2) | LOT | | |
| 13 | Systems Engineering Management Plan (para. 4.2.2.1) | LOT | | |
| 14 | Requirements Traceability Verification Matrix (para. 4.2.5) | LOT | | |
| 15A | Mandated System Review Package - Preliminary Design Review (para. 4.2.4.4) | LOT | | |
| 15B | Preliminary Design Review (para. 4.3.1) | LOT | | |
| 16A | Mandated System Review Package - Critical Design Review (para. 4.2.4.4) | LOT | | |
| 16B | Critical Design Review (para. 4.3.2) | LOT | | |
| 17 | Engineering Drawings and Associated Lists (para. 4.4.3) | LOT | | |
| 18 | Configuration Status Accounting Report (para. 5.5.2) | LOT | | |
| 19A | PWFTS - Mandated System Review Package - TRR (para. 4.2.4.4) | LOT | | |
| 19B | PWFTS - Acceptance Test Plans and Procedures (para. 6.2.4) | LOT | | |
| 19C | PWFTS - Testing Readiness Review (para. 6.1.3) | LOT | | |
| 19D | PWFTS - Acceptance Verification (para. 6.2.2.1.1) | LOT | | |
| 19E | PWFTS - Acceptance Test Reports (para. 6.2.5) | LOT | | |
| 20A | WTS First Production Article - Mandated System Review Package - TRR (para. 4.2.4.4) | LOT | | |
| 20B | WTS First Production Article - Acceptance Test Plans and Procedures (para. 6.2.4) | LOT | | |
| 20C | WTS First Production Article - Testing Readiness Review (para. 6.1.3) | LOT | | |
| 20D | WTS First Production Article - Acceptance Verification (para 6.2.2.1.2) | LOT | | |
| 20E | WTS First Production Article - Acceptance Test Reports (para. 6.2.5) | LOT | | |
| 21A | PCA - Mandated System Review Package (para. 4.2.4.4) | LOT | | |
| 21B | Physical Configuration Audit (para. 5.6.4) | LOT | | |
| 22 | Top Level Assembly Drawing (para. 3.6.2.2) | LOT | | |
| 23 | WTS Operator Manual (para. 8.3.1.1) | LOT | | |
| 24 | WTS Maintenance Manual (para. 8.3.1.3) | LOT | | |
| 25 | WTS Permissive Repair Schedule and Standard Repair Times (para. 8.3.1.4) | LOT | | |
| 26 | WTS Illustrated Parts Manual (para. 8.3.1.5) | LOT | | |
| 27 | WTS Operator Training Package (para. 8.3.1.6) | LOT | | |
| 28 | WTU and ASU Technician Training Package (para. 8.3.1.7) | LOT | | |
| 29 | WTS Preservation, Storage and Reactivation Instructions (para. 8.3.1.8) | LOT | | |
| 30 | WTS Stowage, Shipping and Handling Instructions (para. 8.3.1.9) | LOT | | |
| 31 | WTS Equipment Data Summary (para. 8.3.1.10) | LOT | | |
| 32 | MEU, WSU, and ASU Stowage Maps (para. 8.3.1.11) | LOT | | |
| 33 | WTU Process and Flow Diagrams (para. 8.3.1.12) | LOT | | |
| 34 | Provisioning Parts Breakdown (para. 8.4.3.1) | LOT | | |
| 35 | Supplementary Provisioning Technical Documentation (para. 8.4.3.2) | LOT | | |
| 36 | Special Tools and Test Equipment List (para. 8.4.3.3) | LOT | | |
| 37 | Equipment Delivery Status Report (para. 8.4.3.4) | LOT | | |
| 38 | Initial Provisioning Guidance Conference (para. 8.5.1) | LOT | | |
| 39 | Initial Provisioning Conference (para. 8.6.1) | LOT | | |
| 40 | Identification Plates (para. 8.7) | LOT | | |
| 41 | Controlled & Non-Controlled Goods List (para. 8.8) | LOT | | |
| 42 | Identification Labels for Storage and Shipment, and Packaging Codes (para. 8.9) | LOT | | |
| 43 | List of Items to be Supported (para. 8.10) | LOT | | |
| 44 | WTS Operator Training Session (para. 8.11) — Training Location: | | | |
| | CFB Gagetown | 1 | | |
| | CFB Valcartier | 1 | | |
| | CFB Petawawa | 1 | | |
| | CFB Edmonton | 1 | | |
| 45 | WTU and ASU Technician Training Session | 2 | | |
| 46 | Warranty Support Plan (para. 8.12) | LOT | | |
| 47 | Estimated spare parts for two (2) years of usage – (assumptions are expected) user maintenance follows the Annex A WTS SOW Maintenance Concept para. 8.1, supported by Contractor R&O, which should not be costed here. | | | |
| 48 | Fleet Support Spares (FSS) - Provide cost for the FSS, as described in the Annex A A3.37 DID - List of Items to be Supported. | | | |
| 49 | Packing cost for all items | | | |
| 50 | Shipping cost for all items (exclude customs and excise cost) | | | |
| 51 | Any other associated charges | | | |
| | | | **Subtotal** | |
| | | | **GST/HST** | $ - |
| | | | **Total** | |

Note 1: 'LOT' equates to the quantity needed to fulfill the requirements of the CDRL and revisions, until accepted by DND.

**Table 1-2**

## WTS SUPPORT SOW: MANDATORY COMPLETION OF EACH PRICE "BOX". IF THERE IS NO COST PLEASE INSERT "0" or Nil.

| SUPPORT SOW<br>3.0 Core Activities<br>(Fixed price basis) | DETAILS | YEAR 1 PRICE | YEAR 2 PRICE | YEAR 3 (OPTION) PRICE | YEAR 4 (OPTION) PRICE | YEAR 5 (OPTION) PRICE | YEAR 6 (OPTION) PRICE | YEAR 7 (OPTION) PRICE | YEAR 8 (OPTION) PRICE | YEAR 9 (OPTION) PRICE | YEAR 10 (OPTION) PRICE |
|---|---|---|---|---|---|---|---|---|---|---|---|
| Program Management<br>Operating Support<br>Engineering Support<br>Maintenance Support<br>Supply Support<br>Training Support | Total support cost for all CORE work as described in the Support SOW. | | | | | | | | | | |
| | **Subtotal** | | | | | | | | | | |
| | **GST/HST** | | | | | | | | | | |
| | **Total** | | | | | | | | | | |

| SUPPORT SOW<br>4.0 R&O Activities<br>(Pre-Authorized R&O) | DETAILS | YEAR 1 PRICE | YEAR 2 PRICE | YEAR 3 (OPTION) PRICE | YEAR 4 (OPTION) PRICE | YEAR 5 (OPTION) PRICE | YEAR 6 (OPTION) PRICE | YEAR 7 (OPTION) PRICE | YEAR 8 (OPTION) PRICE | YEAR 9 (OPTION) PRICE | YEAR 10 (OPTION) PRICE |
|---|---|---|---|---|---|---|---|---|---|---|---|
| Maintenance Support<br>(R&O hourly work) | Provide **yearly cost using average hourly rate** (if multiple hourly rates are used depending on the work, it would be the average of these) for repair and overhaul work done by the Contractor and your sub-Contractors:<br><br>Year 1 – estimated to be 300 hours<br>Year 2 – estimated to be 300 hours<br>Year 3 – estimated to be 300 hours<br>Year 4 – estimated to be 350 hours<br>Year 5 – estimated to be 400 hours<br>Year 6 – estimated to be 400 hours<br>Year 7 – estimated to be 400 hours<br>Year 8 – estimated to be 400 hours<br>Year 9 – estimated to be 400 hours<br>Year 10 – estimated to be 400 hours | | | | | | | | | | |
| Maintenance Support<br>(R&O Spares Provisioning) | Spares provisioning (purchased) – Bidder can assume that the support of the WTS fleet requires on average between 500K$ and 600K$ worth of OEM spares.<br><br>Provide the cost of these spares to DND, specifically including the Contractor's price markup (if any) on the OEM spares.<br><br>Year 1 – estimated to be 500K$ of OEM Spares<br>Year 2 – estimated to be 500K$ of OEM Spares<br>Year 3 – estimated to be 500K$ of OEM Spares<br>Year 4 – estimated to be 550K$ of OEM Spares<br>Year 5 – estimated to be 600K$ of OEM Spares<br>Year 6 – estimated to be 600K$ of OEM Spares<br>Year 7 – estimated to be 600K$ of OEM Spares<br>Year 8 – estimated to be 600K$ of OEM Spares<br>Year 9 – estimated to be 600K$ of OEM Spares<br>Year 10 – estimated to be 600K$ of OEM Spares | | | | | | | | | | |
| | **Subtotal** | | | | | | | | | | |
| | **GST/HST** | | | | | | | | | | |
| | **Total** | | | | | | | | | | |

| SUPPORT SOW<br>5.0 Tasking Activities<br>(DND 626 Task Authorization) | DETAILS | YEAR 1 PRICE | YEAR 2 PRICE | YEAR 3 (OPTION) PRICE | YEAR 4 (OPTION) PRICE | YEAR 5 (OPTION) PRICE | YEAR 6 (OPTION) PRICE | YEAR 7 (OPTION) PRICE | YEAR 8 (OPTION) PRICE | YEAR 9 (OPTION) PRICE | YEAR 10 (OPTION) PRICE |
|---|---|---|---|---|---|---|---|---|---|---|---|
| Operating Support<br>FSR Support for Collective Training Exercise | Provide cost for the deployment of Operator and Technical Resources (not including travel cost to and from destination).<br><br>1 x deployment **annually,** domestic (within Canada) location, 1 week (7 days) duration, 8 hours per day.<br><br>WTS equipment provided by DND, any other training equipment provided by Contractor. | | | | | | | | | | |
| Operating Support<br>FSR Support for Deployed Operations | Provide cost for the deployment of Operator and Technical Resources (not including travel cost to and from destination).<br><br>Four deployments total (year 3, year 5, year 8 and year 10) - International deployment (war zone) location, 2 weeks (14 days) duration, 24 hours per day.<br><br>Notes:<br>- Cost will include danger prime for FSRs.<br>- Lodging and foods provided by DND.<br>- Training done at a main base, or airfield, that would be supporting Forward Operating Bases.<br>- Shipment of any equipment (such as BOSK) organized by DND. | Nothing during this period | Nothing during this period | | Nothing during this period | | Nothing during this period | Nothing during this period | | Nothing during this period | |
| Operating Support<br>Procurement of the Operational Spares Kit (BOSK) | Provide cost for the provision of one (1) Operational Spares Kit (BOSK), as described in the Support SOW Appendix A1.0 - List of Items to be Supported. | | Nothing during this period | | | | | | | | |
| Engineering Support<br>Technical Investigation and Engineer Support | Provide **yearly cost using average hourly rate** (if multiple hourly rates are used depending on the TIES resource required, it would be the average of these) for Technical Investigation & Engineering Support work charged by the Contractor.<br><br>Year 1 – estimated to be 150 hours<br>Year 2 – estimated to be 150 hours<br>Year 3 – estimated to be 150 hours<br>Year 4 – estimated to be 150 hours<br>Year 5 – estimated to be 150 hours<br>Year 6 – estimated to be 150 hours<br>Year 7 – estimated to be 150 hours<br>Year 8 – estimated to be 175 hours<br>Year 9 – estimated to be 175 hours<br>Year 10 – estimated to be 200 hours | | | | | | | | | | |
| Supply Support<br>Provision of Material (Operational Spares Kits (BOSK)) | Provide cost for the replenishment of BOSK as a result of Detailed Inspection and Maintenance of the BOSK and after deployment of the BOSK in support of operations.<br><br>Year 1 – estimated to be 10% of the BOSK cost<br>Year 2 – estimated to be 10% of the BOSK cost<br>Year 3 – estimated to be 30% of the BOSK cost<br>Year 4 – estimated to be 10% of the BOSK cost<br>Year 5 – estimated to be 50% of the BOSK cost<br>Year 6 – estimated to be 10% of the BOSK cost<br>Year 7 – estimated to be 10% of the BOSK cost<br>Year 8 – estimated to be 30% of the BOSK cost<br>Year 9 – estimated to be 10% of the BOSK cost<br>Year 10 – estimated to be 50% of the BOSK cost | | | | | | | | | | |

| | | | | | | | | | | | |
|---|---|---|---|---|---|---|---|---|---|---|---|
| Supply Support<br>Provision of Material (Fleet Support Spares (FSS)) | Provide cost for the replenishment of FSS, as described in the Support SOW Appendix A1.0 - List of Items to be Supported, as a result of use in the replenishment of Operational Spares Kits while they are deployed, by FSRs during repairs, and in repair by replacement situations.<br><br>Year 1 – estimated to be 40% of the FSS cost<br>Year 2 – estimated to be 20% of the FSS cost<br>Year 3 – estimated to be 40% of the FSS cost<br>Year 4 – estimated to be 20% of the FSS cost<br>Year 5 – estimated to be 60% of the FSS cost<br>Year 6 – estimated to be 20% of the FSS cost<br>Year 7 – estimated to be 20% of the FSS cost<br>Year 8 – estimated to be 40% of the FSS cost<br>Year 9 – estimated to be 20% of the FSS cost<br>Year 10 – estimated to be 60% of the FSS cost | | | | | | | | | | |
| Supply Support<br>Provision of Material (DND Request) | Provide costs for the provision of the WTS fleet membranes (reverse osmosis & ultra-filtration), to be used by FSRs during repairs, and in repair by replacement situations. WTS Fleet includes all 70 WTS.<br><br>Year 1 – estimated to be 10% of the membranes in the WTS fleet<br>Year 2 – estimated to be 10% of the membranes in the WTS fleet<br>Year 3 – estimated to be 10% of the membranes in the WTS fleet<br>Year 4 – estimated to be 10% of the membranes in the WTS fleet<br>Year 5 – estimated to be 10% of the membranes in the WTS fleet<br>Year 6 – estimated to be 10% of the membranes in the WTS fleet<br>Year 7 – estimated to be 10% of the membranes in the WTS fleet<br>Year 8 – estimated to be 10% of the membranes in the WTS fleet<br>Year 9 – estimated to be 10% of the membranes in the WTS fleet<br>Year 10 – estimated to be 10% of the membranes in the WTS fleet | | | | | | | | | | |
| Supply Support<br>Disposal of DND-Owned Stock (Condemn/Scrapping) | Provide the estimated cost for the disposal of the 70 WTUs, in accordance with the Defence Production Act and applicable environmental laws and regulations, at the end of the WTU service life of 20 years (cost in present day dollars). | | | | | | | | | | |
| Supply Support<br>Disposal of DND-Owned Stock (Condemn/Scrapping) | Provide the estimated cost for the disposal of the 70 MEUs, in accordance with the Defence Production Act and applicable environmental laws and regulations, at the end of the MEU service life of 20 years (cost in present day dollars). | | | | | | | | | | |
| Supply Support<br>Disposal of DND-Owned Stock (Condemn/Scrapping) | Provide the estimated cost for the disposal of the 70 Trailers, in accordance with the Defence Production Act and applicable environmental laws and regulations, at the end of the Trailer service life of 20 years (cost in present day dollars). | | | | | | | | | | |
| Supply Support<br>Disposal of DND-Owned Stock (Condemn/Scrapping) | Provide the estimated cost for the disposal of the 13 ASUs, in accordance with the Defence Production Act and applicable environmental laws and regulations, at the end of the ASU service life of 20 years (cost in present day dollars). | | | | | | | | | | |
| Supply Support<br>Disposal of DND-Owned Stock (Condemn/Scrapping) | Provide the estimated cost for the disposal of the 40 WSUs, in accordance with the Defence Production Act and applicable environmental laws and regulations, at the end of the WSU service life of 20 years (cost in present day dollars). | | | | | | | | | | |

| | | | | | | | | | | | |
|---|---|---|---|---|---|---|---|---|---|---|---|
| Maintenance Support<br>WTS Fleet - Detailed Inspection and Maintenance | Provide costs for the on-site Detailed Inspection and Maintenance of the WTS Fleet, including travel cost to and from location.<br><br>This will require a visit to each fielded location of WTS (generally by regiment) occuring every two (2) years (so 50% of the fleet each year) and being on-site for five (5) days at each location.<br><br>Year 1, 3, 5, 7 & 9: 9 Locations (20 WTS): 37 CER, 36 CER, 35 RGC, 34 RGC, and 33 CER.<br>Year 2, 4, 6, 8 & 10: 9 Locations (20 WTS): 32 CER, 31 CER, 38 CER, 41 CER, and 39 CER. | | | | | | | | | | |
| Maintenance Support<br>ASUs Held by the Contractor - Detailed Inspection and Maintenance | Provide the yearly costs for the Detailed Inspection and Maintenance of the four (4) ASUs held by the Contractor. | | | | | | | | | | |
| Training Support<br>Training Course Delivery for Reserve Units | Provide the yearly cost for the Operator and Technical Resources to deliver the Operator Training Course, including travel cost to and from any Reserve Unit location in Canada (31 CER, 32 CER, 33 CER, 34 RGC, 35 RGC, 36 CER, 37 CER, 38 CER, 39 CER, and 41 CER):<br><br>Two (2) courses per year, each course lasting three (3) weeks (5 days per week, 8 hours per day).<br><br>WTS equipment provided by DND, any other training equipment provided by the Contractor. (assume maximum number of students for each course). | | | | | | | | | | |
| Training Support<br>Training Course Support for CFSME | Provide the yearly cost for the Operator and Technical Resources to support the courses being provided by CAF training staff at CFSME Gagetown.<br><br>Operator Training – Water Supply Operator (WSO) Course occuring two (2) times per year, will require Operator and Technical Resource support for five (5) days, eight (8) hours per day, for each course.<br><br>Maintenance Training – Water Fuel Environmental (WFE) Technician Course occuring two (2) times per year, will require Operator and Technical Resource support for five (5) days, eight (8) hours per day, for each course. | | | | | | | | | | |
| Training Support<br>Training DART support | Provide the yearly cost for the Operator and Technical Resources to support two (2) sessions of DART Technical Assistance Visits (TAV) in Trenton Ontario, during the Operator and Water Fuel Environmental (WFE) Technician deployment readiness confirmation.<br><br>Each of the two (2) sessions will require Operator and Technical Resource support for ten (10) days, eight (8) hours per day. | | | | | | | | | | |
| | **Subtotal** | | | | | | | | | | |
| | **GST/HST** | | | | | | | | | | |
| | **Total** | | | | | | | | | | |

| Table 1-3 | | | | |
|---|---|---|---|---|
| WTT SOW: MANDATORY COMPLETION OF EACH PRICE "BOX". IF THERE IS NO COST PLEASE INSERT "0" or Nil. | | | | |
| **Item #** | **Item Description** | **Qty** | **Unit price** | **Total price** |
| 1 | Water Tank Trailer (para. 1.1) | 250 | | |
| 2 | Project Management Plan (para. 3.2.1) | LOT | | |
| 3 | Kick-off and ILS Meetings (para. 3.3.2 and 3.3.3) | 2 | | |
| 4 | Meeting Agenda (para. 3.3.6.1.1) | LOT | | |
| 5 | Meeting Minutes (para. 3.3.6.1.2) | LOT | | |
| 6 | Top Level Assembly Drawings (para. 3.3.2.2) | LOT | | |
| 7 | Critical Design Review (para. 3.3.4) | LOT | | |
| 8 | First Article Acceptance Plan (para. 4.1.4) | LOT | | |
| 9 | Acceptance Test Reports (para 4.1.6) | LOT | | |
| 10 | Operator Manual (para. 5.3.1.1.1) | LOT | | |
| 11 | Repair Manual (para. 5.3.1.2.1) | LOT | | |
| 12 | Permissive Repair Schedule and Standard Repair Times (para. 5.3.1.3.1) | LOT | | |
| 13 | Illustrated Parts Manual (para. 5.3.1.4.1) | LOT | | |
| 14 | Operator Training Package (para. 5.3.1.5.1) | LOT | | |
| 15 | Preservation, Storage and Reactivation Instructions (para. 5.3.1.6.1) | LOT | | |
| 16 | Stowage, Shipping and Handling Instructions (para. 5.3.1.7.1) | LOT | | |
| 17 | Equipment Data Summary (para. 5.3.1.8.1) | LOT | | |
| 18 | Provisioning Parts Breakdown (para. 5.4.3.1.1) | LOT | | |
| 19 | Supplementary Provisioning Technical Documentation (para. 5.4.3.2.1) | LOT | | |
| 20 | Contract Delivery Status Report – Spares (para. 5.4.3.3.1) | LOT | | |
| 21 | Contract Delivery Status Report – WTT (para. 5.4.3.4.1) | LOT | | |
| 22 | Initial Provisioning Conference (para. 5.5) | LOT | | |
| 23 | Identification Plates (para. 5.6.1) | LOT | | |
| 24 | Controlled & Non-Controlled Goods List (para. 5.7.1) | LOT | | |
| 25 | Identification Labels for Storage and Shipment, and Packaging Codes (para. 5.8.3) | LOT | | |
| 26 | Repair & Overhaul Plan (para. 5.9.1) | LOT | | |
| 27 | Warranty Support Plan (para. 5.10.1) | LOT | | |
| 28 | Estimated spare parts for two (2) years of usage – (assumptions are expected) user maintenance follows the Annex D WTT SOW Maintenance Concept para. 5.1. | | | |
| 29 | Packing cost for all items | | | |
| 30 | Shipping cost for all items (exclude customs and excise cost) | | | |
| 31 | Any other associated charges | | | |
| | | | **Subtotal** | |
| | | | **GST/HST** | $ - |
| | | | **Total** | |
| Note 1: | 'LOT' equates to the quantity needed to fulfill the requirements of the CDRL and revisions, until accepted by DND. | | | |