OPERATION & MAINTENANCE MANUAL 0851A03
Rescue boat
crane Rhs.13/3,5

Global Davit GmbH
Survival- & Deck Equipment

Yard	Meridien Maritime Réparation Matane, Quebec Canada
Hull	H-010, "Leim"
Classification	American Bureau of Shipping
Flag state	Canada
Requirements	SOLAS 1974, with latest amendments

MAIN DATA:

Suppliers reference nr.		0851A03
Technical data		
S.W.L.	- boat	10 kN
	- liferaft	\
	- stores handling	\
Radius	- life saving	3,5 m
	- stores handling	\
Storage instructions		
Conservation	- shot blasting	SA 2,5
	- painting	conform purchase order
Storage		unprotected storage for more than 3 months is not allowed, unless a final paint system has been applied

Graf Zeppelin-Ring 2
D-27211 Bassum
Postfach 1308
D-27203 Bassum

Telefon: +49 4241 93-35-0
Telefax: +49 4241 93-35-25
E-Mail: info@global-davit.de
Internet: www.global-davit.de

Kreissparkasse Syke
(BLZ 291 517 00) Kto.-Nr.131 000696 8
IBAN: DE20 2915 1700 1310 0069 68
BIC: BRLADE21SYK

Commerzbank Diepholz
(BLZ 256 413 02) Kto.-Nr.6205603
IBAN: DE17 2564 1302 0620 5603 00
BIC: COBADEFF

HRB 111084 AG Walsrode
VAT Nr. DE 812 799 894
Geschäftsführer:
H.D. Bergmann

Operation manual,
life saving slewing crane

INDEX

OPERATION MANUAL

1.0. DAVIT SYSTEM
2.0. LAUNCHING INSTRUCTIONS
- 2.1 Liferaft launching, crane type Lms.
- 2.2 Rescue boat launching, crane type Rms.
- 2.3 Rescue boat launching, crane type Rhs.
- 2.4 Launching of a second craft

3.0. RECOVERY INSTRUCTIONS
- 3.1. Liferaft recovery
- 3.2. Rescue boat recovery (standard procedure)
- 3.3 Rescue boat recovery (foul weather)
- 3.4. Stowage instructions

4.0. REMOTE CONTROL
5.0. ELECTRIC SYSTEM
- 5.1. Electric motor(s)
- 5.2. Starter box
- 5.3. Portable remote control unit
- 5.4. Limit switches

6.0. HYDRAULIC SYSTEM
- 6.1. Hydraulic power unit / control unit
- 6.2. Accumulator / pressure control switch
- 6.3. Hydraulic motor

7.0. LIFE SAVING WINCH DESCRIPTION, winch types W02/W04
- 7.1. Main components
- 7.2. Functional description

8.0. STORES WINCH DESCRIPTION, winch types WS01/WS02
- 8.1. Main components
- 8.2. Functional description stores winch

MAINTENANCE MANUAL

9.0. RECOMMENDED LUBRICANTS
10.0. BRAKE GEAR AND BRAKE CONTROL MECHANISM, type W02/W04
11.0. BRAKE SYSTEM OF LAUNCHING APPLIANCE WINCHES, type W02/W04
12.0. MAINTENANCE
- 12.1. Maintenance group 1, one week service
- 12.2. Maintenance group 2, one month service
- 12.3. Maintenance group 3, three months service
- 12.4. Maintenance group 4, one year service

13.0. SPARE PARTS

Operation manual,
life saving slewing crane

1.0. DAVIT SYSTEM

A summary of the most important particulars of the launching appliance as well as those of the craft to be launched is given on the enclosed arrangement drawing. The appliance is capable of handling a life saving craft of specified dimensions and capacity, the latter comprising a total of persons, as specified on the same drawing.

1.1. GENERALITIES

The life saving system is designed in that way that all necessary functions for hoisting and lowering of the craft are fulfilled. The system corresponds to the arrangement drawing.

This manual is valid for the following crane types:

- Liferaft cranes with manual slewing, type Lms.
- Rescue boat cranes with manual slewing, type Rms.
- Rescue boat cranes with hydraulic slewing, type Rhs.
- Combined rescue boat / liferaft cranes with manual slewing, type Rms.L.
- Combined rescue boat / liferaft cranes with hydraulic slewing, type Rhs.L.
- All above mentioned crane types can be executed with an additional stores winch.

Cranes with manual slewing

The Lms. and Rms. type davit systems are suitable for the launching of respectively a raft and a boat including the full complement of persons from the lowering/embarkation position to the water level. The survival craft is, in empty condition, slewed from the stowed position to the embarkation position by means of hand operation.

For cranes with additional stores handling features an electric motor may be installed on the slewing gear.

Cranes with hydraulic slewing

The Rhs. type davit systems are suitable for the launching of a boat including the full complement of persons from the stowed/embarkation position to the water level. The survival craft is, in fully boarded condition, slewed from the stowed position to the lowering position by means of hydraulic "stored power". The slewing procedure can also be controlled from within the craft.

Combined cranes

The Rms.L. and Rhs.L. type combined davit systems are suitable for launching the rescue boat and the liferaft (in this sequence).

In the case of boat handling equipment the entry to the survival craft should be wide enough to handle a stretcher on, carrying a wounded person.

The lowering procedure is always performed due to gravity. The lowering procedure can be controlled from either the winch position, or from within the craft.
Recovery of any boat can be controlled electrically and manually, recovery of any raft is manually only.

The pushbutton box, for recovery of the boat, is situated on the crane. By pushing the "hoisting"-button the boat can be lifted to the highest position. By reaching this position, the electric hoisting motor is switched off, due to the limit switch on the winch (in special cases: on the arm). Any remaining hoisting distance, for stowing purposes, should be overcome by hoisting with the hand crank.

For bringing the craft to the inboard position, the davit can be slewed by means of:

- The supplied hand crank (crane types Lms. and Rms.).

or by:

- The hydraulic slewing motor, via the control lever on the hydraulic unit (crane types Rhs. only).

For the reasons of safety, the design of any button and/or lever is such that an immediate braking power is available as soon as actuation of this button / lever is discontinued; "dead-man"-type controls are being applied.

Recovery of the empty hook, for reason of launching a second life saving craft is performed with the quick return device. A hand wheel is, for this purpose, situated on the drum.

To assure a minimum of maintenance all shafts are of stainless steel and the sheaves of polyamide.

2.0. LAUNCHING INSTRUCTIONS

To assure a safe and well-executed launching, for each davit system, an instruction plate has been installed. This instruction plate shows the exact sequence of the launching procedure and by following the instructions safe launching is guaranteed. The complete procedures for a safe launching and recovering will be reviewed in the next paragraphs.

2.1. LIFERAFT LAUNCHING, crane type Lms.

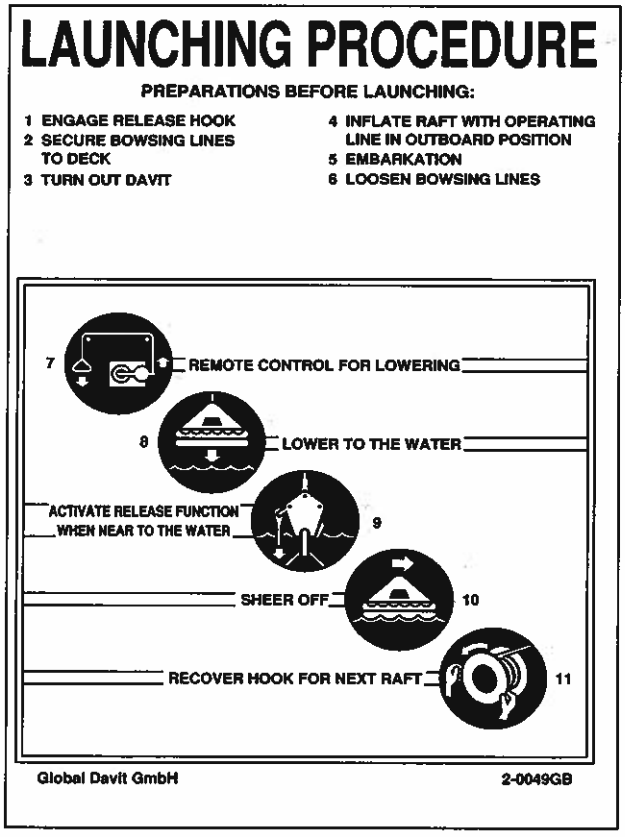

2.1.1. PREPARATIONS BEFORE LAUNCHING

- Remove all protection covers.
- Check and remove any obstructions/railing.

2.1.2. TURNING-OUT PROCEDURE

- Turn the davit to the lowering position (using in the hand crank) while attaching the bowsing lines of the raft to the ship's side.
- Open the liferaft container, while inflating the raft.
- Embarkation, assure no people wearing sharp edged shoes or instruments enter the raft.
- Release the bowsing lines / flap.

2.1.3. LOWERING PROCEDURE

- Lift the brake lever of the winch, for which two options are available:
  - ➢ From within the craft: pull firmly on the RED remote control grip. By actuating the lever, the lowering continues until the craft is water borne. Stopping remains possible.
  - ➢ From near the winch: lift the brake lever by hand; stopping is still possible.
- When coming close to the water surface, pull the lanyard of the automatic release hook. Upon reaching the water surface, the hook automatically opens, thus releasing the raft.

2.2. RESCUE BOAT LAUNCHING, crane type Rms.

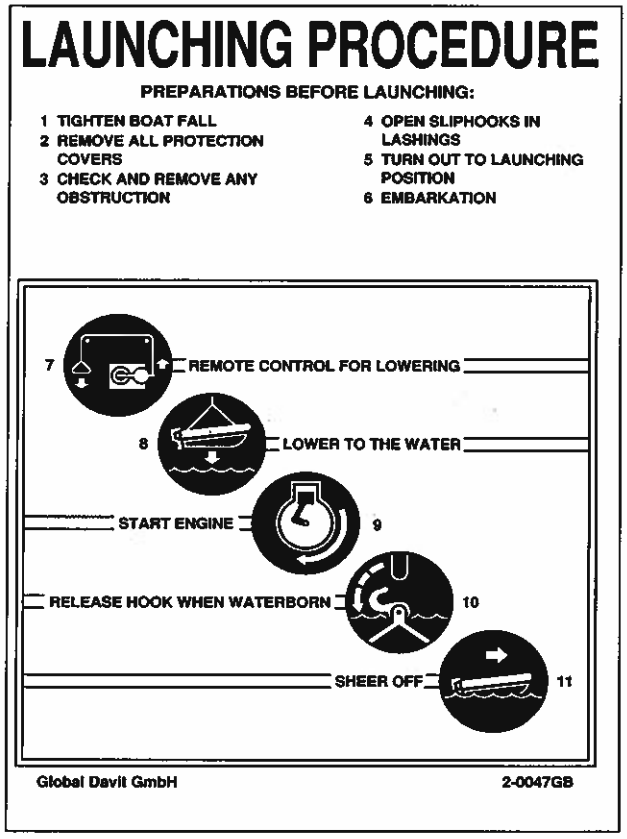

2.2.1. PREPARATIONS BEFORE LAUNCHING

- Tighten the boat fall by means of the crank.
- Remove all protection covers.
- Check and remove any obstruction/railing.
- Check whether the boat chocks do not obstruct the turning-out procedure.
- Relieve, if possible, the tensile force in the lashings, by twisting the turnbuckles.
- Open the slip hooks in the lashings and make sure the wire ropes create no obstruction, blocking the turning-out procedure.
- Check boat drains.

2.2.2. TURNING-OUT PROCEDURE

- Insert the co-delivered hand crank to the squared extension of the slewing facility shaft and rotate as appropriate.
- When reaching the lowering position stop slewing.
- Embarkation.

2.2.3. LOWERING PROCEDURE

- Lift the brake lever of the winch, for which two options are available:
  - ➢ From within the craft: pull firmly on the RED remote control grip. By actuating the lever, the lowering continues until the craft is water borne. Stopping remains possible.
  - ➢ From near the winch: lift the brake lever by hand; stopping is still possible.
- Start the engine of the survival craft.
- Release the hook when water borne.

2.3. RESCUE BOAT LAUNCHING, crane type Rhs.

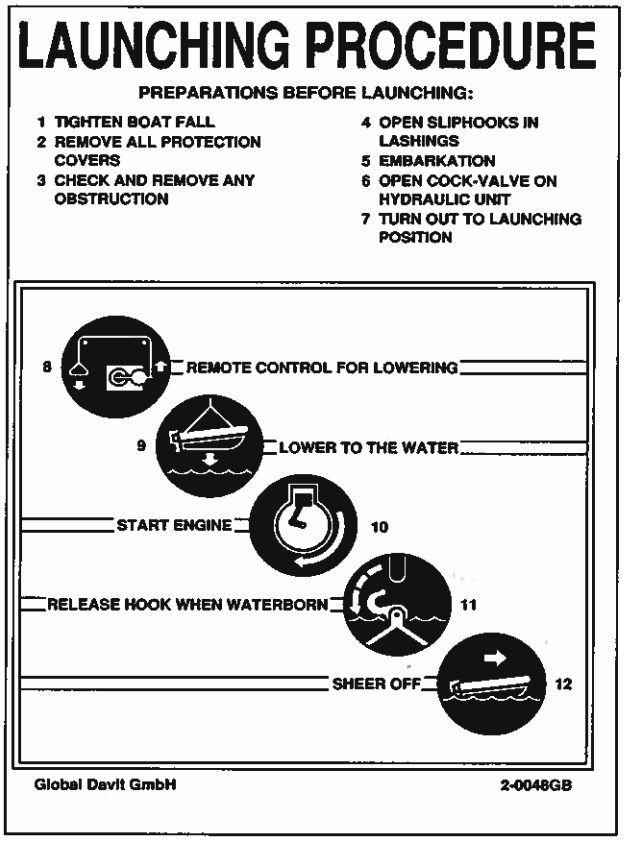

2.3.1. PREPARATIONS BEFORE LAUNCHING

- Tighten the boat fall by means of the crank.
- Remove all protection covers.
- Check and remove any obstruction/railing.
- Relieve, if possible, the tensile force in the lashings, by twisting the turnbuckles.
- Open the slip hooks in the lashings and make sure the wire ropes create no obstruction, blocking the turning out procedure.
- Check whether the boat chocks do not obstruct the turning-out procedure.
- Check boat drains.

2.3.2. TURNING-OUT PROCEDURE

- Embarkation.

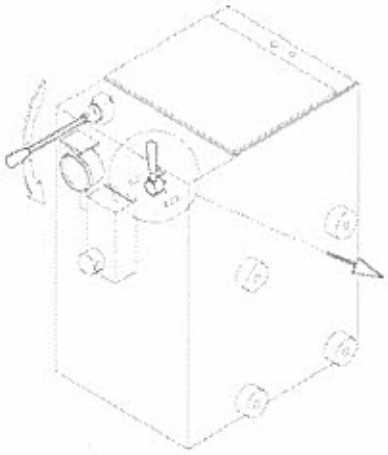

Valve open. Crane ready for slewing out with stored power.

Valve closed. Crane in stowed

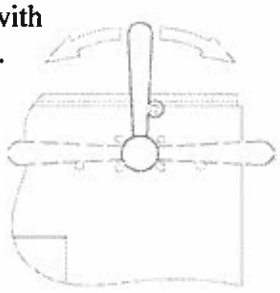

Drain accumulator. For maintenance and refreshing oil. Securing bolt to be removed.

normally closed, open only when in use

- Open the cock-valve of the hydraulic "stored-power" slewing system. After actuation of the valve, the turning-out procedure should be continued as soon

as possible.

- Lift the slewing control lever of the 4/3 hand operated directional control valve, for which two options are available:
  - From within the craft: pull firmly on the YELLOW remote control grip. By actuating the lever, the slewing continues up to the lowering position. The slewing stops as soon as the actuation is discontinued.
  - From the crane: lift the lever by hand, stopping remains possible.
- When reaching the lowering position stop slewing.

2.3.3. LOWERING PROCEDURE

- Lift the brake lever of the winch, for which two options are available:
  - From within the craft: pull firmly on the RED remote control grip. By actuating the lever, the lowering continues until the craft is water borne. Stopping remains possible.
  - From near the winch: lift the brake lever by hand; stopping is still possible.
- Start the engine of the survival craft.
- Release the hook when water borne.

2.4. LAUNCHING OF A SECOND CRAFT

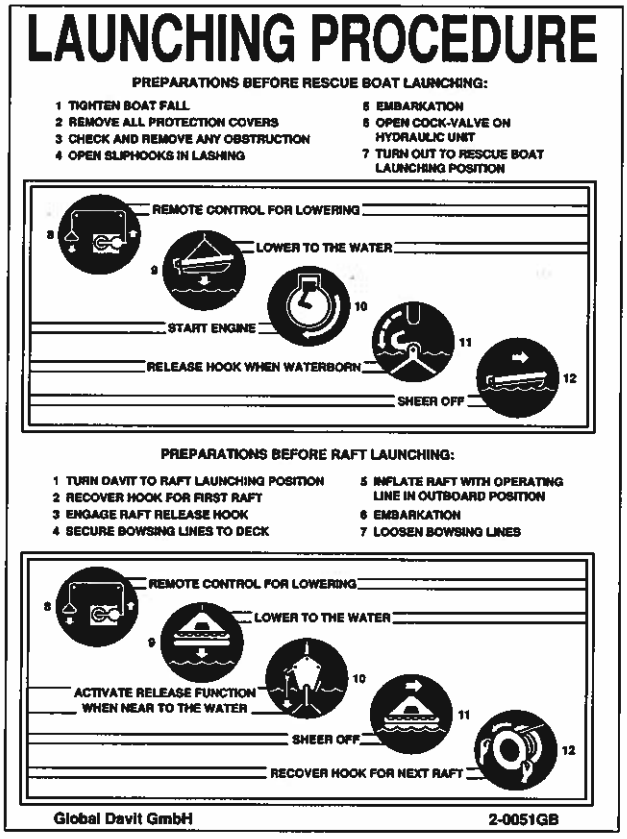

2.4.1. TURNING-OUT PROCEDURE

- Recover the empty hook with the quick return device on the winch.
- If a new position of the arm is required one of the following procedure should be followed:
  - ➢ Insert the co-delivered hand crank to the squared extension to the slewing facility shaft (manually driven cranes) and rotate as appropriate until the new lowering position has been reached.
  - ➢ Insert the co-delivered pump handle in the hand pump shaft (hydraulically driven cranes) and operate as appropriate until the new lowering position has been reached.

- Bring the release hook to the inboard, using the jockey pulley (if installed) and proceed with the next craft.
- Follow the instructions for liferaft handling above stipulated.

3.0. RECOVERY INSTRUCTIONS

For a safe recovery the following actions should be taken by the crew:

3.1. LIFERAFT RECOVERY

- The recovery of any liferaft is only allowed with a maximum of 2 persons in the liferaft.
- Make sure the wire rope falls contain slack and fasten the suspension in the release hook.
- After closing of the hook, the control lever must be pushed in the "locked" position.
- Start hoisting by using the hand crank.
- Ensure each wire rope turn remaining permanently on the winch drum to be kept close to the adjacent one until rope tautening eliminates rope slack.
- Ensure during hoisting a proper spooling of the remote control wire.
- Check whether the hoisting wire and the remote control wire have been spooled up as appropriate.
- Start slewing by inserting the co-delivered hand crank to the squared extension of the slewing facility shaft and rotate as appropriate. Bring the davit to the final stowed position.

3.2. RESCUE BOAT RECOVERY (standard procedure)

- The recovery of any boat is only allowed with a maximum of 6 persons in the rescue craft.
- Make sure the wire rope falls contain slack and fasten the suspension in the release hook.
- Start hoisting from the control stand on the davit or using the hand crank.
- Ensure each wire rope turn remaining permanently on the winch drum to be kept close to the adjacent one until rope tautening eliminates rope slack.
- Ensure during hoisting a proper spooling of the remote control wire.
- When reaching the highest hoisting position the limit switch on the winch (in special cases: on the arm) automatically stops any electric driven hoisting procedure.
- Check whether the hoisting wire and the remote control wire have been spooled up as appropriate.
- Start slewing by activating the slewing drive or by inserting the co-delivered hand crank to the squared extension of the slewing facility shaft and rotate as appropriate. Bring the davit to the final stowed position.

3.3. RESCUE BOAT RECOVERY (in foul weather)

- The recovery of any rescue boat is only allowed with a maximum of 6 persons in the rescue craft.

- Install the pendant wire to the davit arm.
- Bring the arm to the outboard position.
- Make sure the wire rope falls contain slack. Install the recovery strop to the wire rope falls and engage the suspension link of the recovery strop into the boat release hook.
- Start hoisting from the control stand on the davit or using the hand crank.
- Ensure each wire rope turn remaining permanently on the winch drum to be kept close to the adjacent one until rope tautening eliminates rope slack.
- Ensure during hoisting a proper spooling of the remote control wire.
- When reaching the highest hoisting position the limit switch on the winch automatically stops any electric driven hoisting procedure.
- Engage the pendant wire to the boat release gear.
- Lower the boat to remove the tension on the boat hook / recovery strop. Remove the recovery strop.
- Lower the wire rope falls to engage the suspension link into the boat release gear.
- Recommence the hoisting procedure.
- When reaching the highest hoisting position the limit switch on the winch (in special cases: on the arm) automatically stops any electric driven hoisting procedure.
- Check whether the hoisting wire and the remote control wire have been spooled up as appropriate.
- Start slewing by activating the slewing drive. Bring the davit to the final stowed position.

3.4. STOWAGE INSTRUCTIONS

For a safe stowing of the system and life saving craft the following actions should be taken by the boat handling crew:

3.4.1. ACTIONS AFTER RECOVERY

- Place the boat on the boat chocks; some additional manual hoisting with the co-delivered hand crank might be necessary.
- Place the gripe gear and tighten up as much as possible.
- For preparing the craft for stowing, follow the instructions as given in the manual of the survival craft.
- Place all protection covers.
- De-load the wire rope to a hand taut extend by lifting the brake lever for a short moment.
- Close the cock-valve of the hydraulic "stored-power" slewing system (hydraulic systems only).

4.0. REMOTE CONTROL

To assure a safe and well-executed launching each davit system incorporates a remote control system, allowing operating from within the craft, for:

- lowering (all crane types)
- slewing (only for crane type Rhs. and Rhs.L.)

4.1. REMOTE CONTROL FOR LOWERING, type "SG"

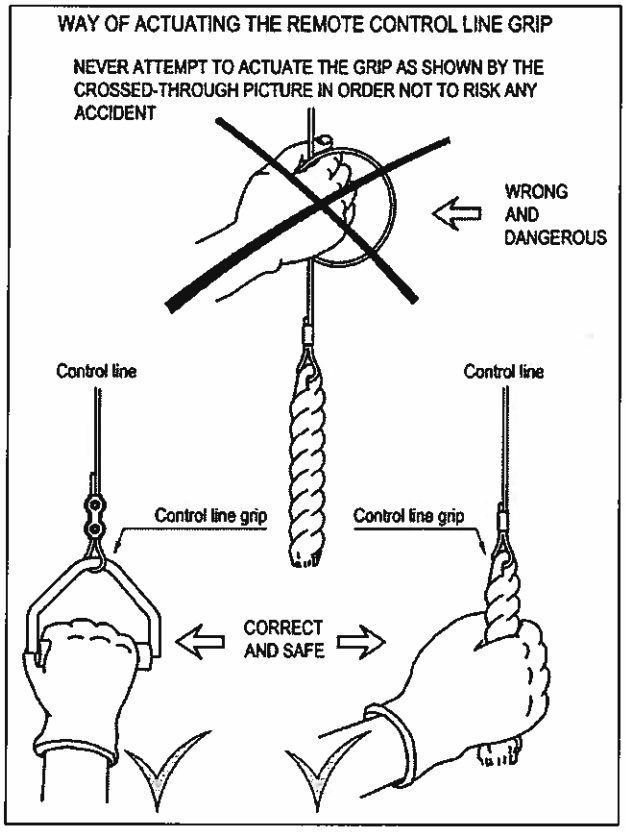

For activating the lowering procedure from within the survival craft a remote control system has been foreseen. The boat handling crew from inside the craft can activate the control lever of the winch.

For reason of personal safety never attempt to wrap the control line round fingers or hand, for any obstruction on the outside could lead to serious injuries then. Use the control wire grip only as shown.

4.2. REMOTE CONTROL FOR SLEWING, only crane type Rhs. and Rhs.L.

On cranes of the type Rhs. and Rhs.L. an additional remote control has been foreseen to control the turning-out procedure in the same way as the lowering procedure.

5.0. ELECTRIC SYSTEM, rescue boat cranes only

The electric control system, shown on the drawing "electric circuit diagram", comprises the following main items:

- Electric motor, situated on the "life saving" winch
- Electric motor, situated in the hydraulic power unit (optional)
- Electric motor, situated on the stores handling winch (optional)
- Starter box
- Portable remote control unit
- Limit switches

5.1. ELECTRIC MOTOR(S)

All rescue boat cranes

One electric motor is mounted on the "life saving" winch, directly driving the load via a gear train. The motor is of the type B5, insulation class F, and enclosure IP56. The motor is of the 4-pole type, allowing one speed for hoisting. The motor contains a stand-by-heating element connected to the starter box on the control voltage circuit. Technical data of the motor can be found on the enclosed arrangement drawing of the system.

Cranes of the type Rhs. only

One electric motor is mounted in the hydraulic unit directly driving the pump via a flexible coupling. Technical data of the motor can be found on the enclosed arrangement drawing of the system.

Cranes with stores handling facilities

One electric motor is mounted on the stores-handling winch, directly driving the load via a gear train. The motor is of the type B5, insulation class F, and enclosure IP56. The motor is of the 4-pole type, allowing one speed for hoisting and lowering. The motor contains a stand-by-heating element connected to the starter box on the control voltage circuit. Technical data of the motor can be found on the enclosed arrangement drawing of the system.

5.2. STARTER BOX

The starter box is normally executed for mounting on deck and is, in that case, of the enclosure class IP 56. The following controls / alarms are situated on the starter box:

- MAIN POWER SWITCH, with this switch the electric supply to the electric system can be controlled.
- "POWER-ON" INDICATOR, this indicator lights as soon as the main power switch has been activated.
- PUSH BUTTON "HOISTING", with this button the electrically driven hoisting procedure of the boat winch can be controlled. An additional or alternative remote button may be installed to allow safe control in every position.

For cranes of the type Rhs. and Rhs.L. only:

- EMERGENCY-OFF" BUTTON; with this switch the power to all electric motors can be switched off, causing at the same moment a lighting of the "failure" alarm.
- "FAILURE" ALARM; this indicator lights as soon as miss functioning of the stored-power unit may be expected. The following circumstances cause an alarm:
  - The emergency stop has been activated.
  - The low-pressure contact of the pressure alarm switch has been activated, however the electric motor is not able to charge the accumulator within a reasonable time limit.
  - One of the electric motors takes too much power causing the corresponding relays to respond.

For cranes with stores handling facilities:

- PUSH BUTTONS "HOISTING" AND "LOWERING", with these buttons the electrically driven hoisting procedure of the stores winch can be controlled. An additional or alternative remote button may be installed to allow safe control in every crane position.

The starter box contains a stand-by-heating element connected to the control voltage circuit.

5.3. PORTABLE REMOTE CONTROL UNIT (optional)

A portable remote control unit may be supplied with the crane to allow safe operation of the crane in every crane position. The unit contains the push buttons, which are required to operate the various electrically driven procedures. The unit is of the enclosure class IP 44, and should, when not being used, be stowed below decks.

5.4 LIMIT SWITCHES

The limit switches are of the enclosure IP 56 for mounting on deck.

on all types of boat cranes	
stopping the boat at the highest hook position	on the winch (on the arm)
locking the electric motor if the crank is inserted	on the winch
additionally on cranes with hydraulic stored power	
starting and stopping of the accumulator charging	in the hydraulic unit
additionally on cranes with stores handling facilities	
stopping the stores handling hoisting procedure	on stores winch
additionally (optional)	
limiting the slewing procedures	close to the foundation

For further details see the electric circuit diagrams.

6.0. HYDRAULIC SYSTEM, cranes with hydraulic slewing only

The turning-out/turning-in of the davit is performed by means of a hydraulic motor, situated on the crane column.

The hydraulic control system is shown on the accompanying drawing "hydraulic circuit diagram". It comprises the following main items:

- hydraulic power unit / control unit
- accumulator / pressure control switch
- hydraulic motor

6.1. HYDRAULIC POWER UNIT / CONTROL UNIT

The hydraulic power unit is mounted on the crane column. It incorporates an electric motor (see "ELECTRICS"), directly driving the pump via a flexible coupling. The pump, as well as the control components, is located inside the tank.

6.2. ACCUMULATOR / PRESSURE CONTROL SWITCH

An accumulator is mounted on the crane, directly driving the hydraulic motor as soon as the "COCK VALVE" and the "4/3 HAND OPERATED DIRECTIONAL CONTROL VALVE" are actuated.
The pressure in the accumulator is controlled by the pressure control switch and visualised by the build-on manometer. The pressure control switch starts and stops the electric motor at pressures as shown on the enclosed arrangement drawing.
For safety reasons a pressure relief valve is incorporated in the system. An additional cock valve (for drainage purposes) is added.

6.3. HYDRAULIC MOTOR

The hydraulic motor is the actuator of the "stored power" slewing mechanism. The motor is located on the crane column, close to the winch.

7.0. LIFE SAVING WINCH DESCRIPTION,
winch types W02 and W04

In essence the launching of each life saving craft occurs by gravity only. To the purpose of rescue boat recovery by electric power, the winch is executed with an electric motor. Liferafts are recovered by manual cranking only.

To the purpose of craft recovery by manual cranking, the co-delivered hand crank is inserted to the squared extension of the hoisting facility shaft and rotated as appropriate; the facility is back-kick proof.

To the purpose of multiple craft handling the winch may be executed with a quick return device for a fast recovery of the empty hook.

7.1. MAIN COMPONENTS, winch types W02 and W04

Basically, the winch comprises a:

- Wire rope drum
- Speed reducer gear
- Safety gear
- Brake gear
- Motor power unit (rescue boat winches only)
- Manual hoisting facility
- Remote control drum

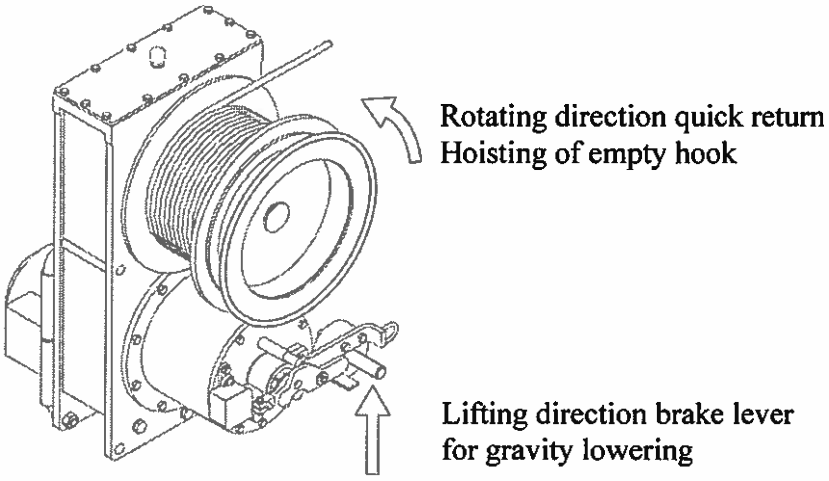

7.1.1. DRUM

To coil, accommodate, or unwind the necessary wire rope fall parts, the winch is equipped with a drum, the shaft of which is being supported in ball bearings.
In cases where the crane is used to serve more than one life saving craft the drum will incorporate a quick return unit.

7.1.2. SPEED REDUCER GEAR
The speed reducer gear employs an appropriate conventional gear train.

7.1.3. SAFETY GEAR (CENTRIFUGAL BRAKE)
To the purpose of gravity lowering an automatic governor brake has been installed, keeping the rate of lowering speed situated within permissible limits.

7.1.4. BRAKE GEAR (STOP BRAKE)
To the purpose of holding the survival craft in any position a spring-operated brake has been installed. By lifting the brake lever a control mechanism relieves the brake and lowering due to gravity with a speed governed by the safety gear is possible.
By releasing the brake lever the lever drops back to the neutral position.

7.1.5. MOTOR POWER UNIT, (rescue boat winches only)
The motor power unit is represented by a squirrel cage electric motor, creating the possibility of hoisting the survival craft with the speed desired (see also the enclosed arrangement drawing). Lowering by means of this motor is not possible.

7.1.6. MANUAL CRANKING GEAR
Apart from hoisting the load by motor power, there is also a back kick proof manual hoisting facility, enabling the craft to be recovered by manual cranking as need be. To that purpose the co-delivered hand crank has to be inserted on to the squared extension concerned, and rotated as long as necessary.
If not required the crank handle should be stowed in its supports on the winch. If inserted the electric motor can not be activated.
During gravity lowering the hand crank can not be inserted since the cover, which has to be turned aside, will prevent any brake lever movement.

7.1.7. REMOTE CONTROL DRUM
On the drum shaft of the winch an extra drum has been placed to store the remote control drum wire.
During the recovery of the survival craft it might be necessary to check whether the remote control wire spools correctly onto the drum.
SOME ASSISTANCE MAY BE REQUIRED!

7.2. FUNCTIONAL DESCRIPTION, winch types W02 and W04

The individual modes of operation are as follows:

7.2.1. HOISTING BY ELECTRIC POWER (rescue boat cranes only)

Electric motor rotation enacted by actuation of the push button on the control box results in a corresponding drum rotation.

7.2.2. LOWERING BY GRAVITY

To the purpose of lowering the load by gravity, the brake is relieved by lifting its control lever, which also permits the brake shaft to rotate and the drum is free to payout the load.

For safety reasons the design is such that in case of discontinuing the activation of the lever descend of the survival craft is stopped immediately; the design is of the "dead-man"type.

7.2.3. HOISTING BY MANUAL CRANKING

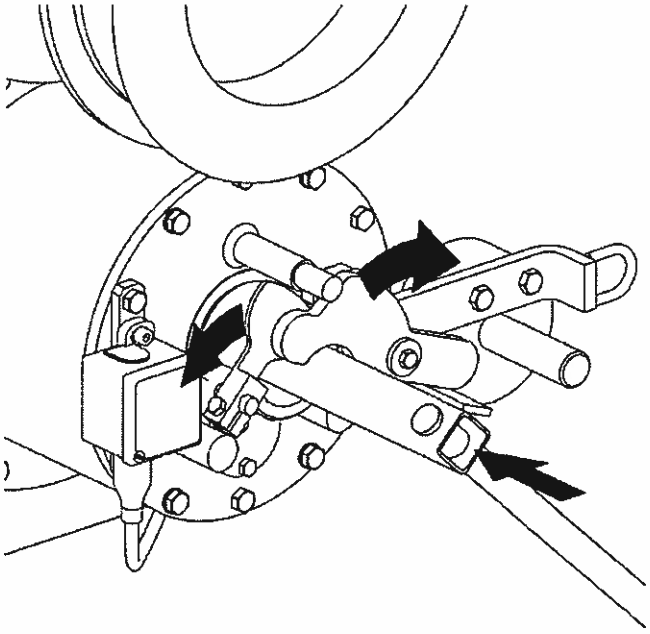

Manual crank rotation coincides with the corresponding drum rotation, the crank engaging with gear shaft. The incorporated non-return device/freewheel coupling enables free hoisting rotation. To the purpose of insertion of the hand crank, the safety device actuators screening the shaft entry have to be turned aside, preventing at the same time the gravity lowering procedure as well as the motor from being set running.

7.2.4. RECOVERING OF THE EMPTY HOOK (optional)

Manual hoisting with high speed is possible, if the hook is unloaded. To this purpose a handrail has been attached to the drum flange.

8.0. STORES WINCH DESCRIPTION, winch types WS01 and WS02

8.1. MAIN COMPONENTS, winch types WS01 and WS02

Basically each stores winch comprises a:

- Wire rope coiling gear; the drum or barrel
- Speed reducer gear
- Motor power unit

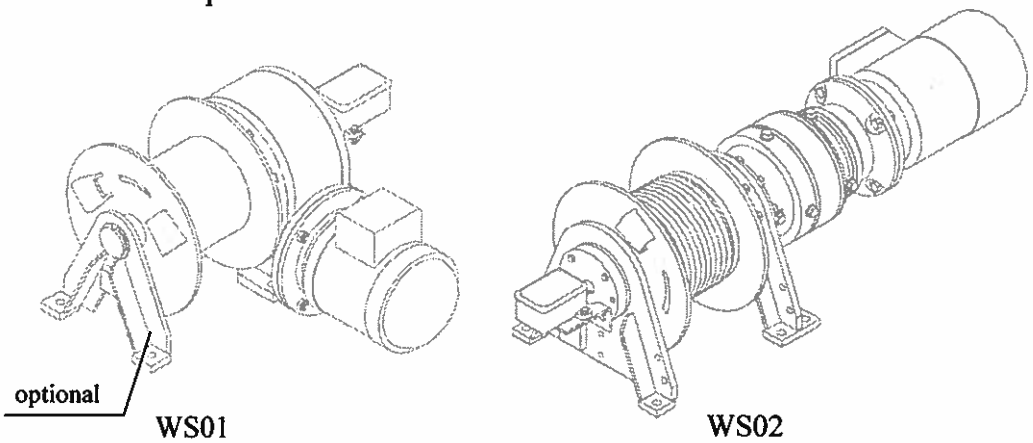

8.1.1. DRUM

To coil, accommodate, or unwind the necessary wire rope fall parts, the winch is equipped with a drum, the shaft of which is being supported in ball bearings.

8.1.2. SPEED REDUCER GEAR

The speed reducer gear employs an appropriate gear unit, being a:

- worm gear in the case of winch types WS01
- planetary gear unit in the case of winch types WS02

8.1.3. MOTOR POWER UNIT

The motor power unit is represented by a squirrel cage electric motor, creating the possibility of hoisting any load with the speed desired. For further winch data see the arrangement drawing of the system. Lowering by means of this motor is also possible.

8.2. FUNCTIONAL DESCRIPTION STORES WINCH, winch types WS01 and WS02

The individual modes of operation are as follows:

8.2.1. HOISTING/LOWERING BY ELECTRIC POWER

Electric motor rotation enacted by actuation of the push button on the starter box or on the portable remote control unit results in a corresponding drum rotation.

9.0. RECOMMENDED LUBRICANTS

For the recommended oil and grease types, please see the subjoined list made up in compliance with recommendations by the leading Oil Companies.

Lubricants have been developing unceasingly; it is advisable to consult your lubricant supplier, in particular whenever operation at extremes of temperature should be envisaged.

With respect to the particulars mentioned in the list, your lubricant supplier will be pleased to assist you in making a choice of the lubricant types optimally suited to the ship's area of navigation.

Basic requirements for all slewing systems

No	APPLICATION POINT	RECOMMEN-DATION	Q'TY / SET	SET / VESSEL	TOTAL / VESSEL	FILLING
1	GEAR BOX OF BOAT WINCH	ISO VG CL 68	ca. 1,1 ltr	1	1,1 ltr	filled
2	FREEWHEEL OF BOAT WINCH	ISO VG 15 HLP	0,05 ltr	1	0,05 ltr	lifetime filled
3	GREASE NIPPLES SLEWING COLUMN	Grease with EP additives NLGI – class 2	2,0 kg	1	2,0 kg	Greased
4	WIRE ROPE FALLS	Wire fall grease according to lubricant / oil maker's standard	2,0 kg	1	2,0 kg	Greased

Additional requirements for hydraulic driven slewing gears

No	APPLICATION POINT	RECOMMENDATION	Q'TY / SET	SET / VESSEL	TOTAL / VESSEL	FILLING
5	HYDRAULIC SYSTEM	ISO VG 15 HLP	90,0 ltr	1	90,0 ltr	by yard
6	GEAR BOX OF SLEWING GEAR	ISO VG CL 68	ca. 1,1 ltr	1	1,1 ltr	filled

Additional requirements for systems with stores winch

No	APPLICATION POINT	RECOMMEN-DATION	Winches	Q'TY / SET	SET / VESSEL	TOTAL / VESSEL	FILLING
7	GEAR BOX OF STORES WINCH	ISO VG CL 68	WS01*	4,1 ltr	1	4,1 ltr	filled
			WS02*	1,6 ltr		1,6 ltr	

10.0. BRAKE GEAR AND BRAKE CONTROL MECHANISM, type W02 and W04

The frequency of inspection checks and adjustment activities strongly depends on the frequency and extend of use, the way of actuating the controls and similar factors; as customary with such kind of equipment, own experience will provide for an optimum frequency of servicing and maintenance activities to be assessed.

To start with, a three-month interval may be recommended.

NOTE: BEFORE STARTING ANY INSPECTION OF WINCH BRAKES, ALWAYS BE CERTAIN THAT:

- **NO LOAD/CRAFT IS HANGING FROM THE WIRE ROPE FALLS.**

10.1. INSPECTION CHECK & ADJUSTMENT

Independent of the condition of the brake linings the brake lever will remain in a horizontal position. Due to a wearing process occurred between the brake lining and the counter-part faces, the spring (tightening the internal brake lever) has to pull this internal brake lever more and more.
When extremely worn-out this spring will no longer be capable of stopping the load: the load will be lowered with a speed governed by the safety brake.
Please use the attached illustration sheet and follow the instructions:

- Remove the weight of the brake lever (1) from the lever by unscrewing the two bolts (2) and nuts (3), this obtaining securing device (4).
- Place the securing device (4) on the securing pin (5).
- Remove the nut (6) from the brake lever
- Lift the brake lever so that the hole of the securing plate fits under the free screw of the lever.
- Secure the securing device (4) with the nut (6).
- Remove the 6 bolts of the brake cover.
- To further assist removal of the brake cover plate: remove the 3 thread blanking bolts from threaded holes and fit the longer bolts into same threaded holes. Tighten the bolts in an even pattern as necessary to assist extraction of the cover plate from housing.
- Remove the brake cover (7) of the winch housing.
- The stop brake is now clearly visible.
- For assembly proceed in opposite sequence.

Maintenance manual,
life saving slewing crane

INSPECTION BRAKE LINING STOP BRAKE

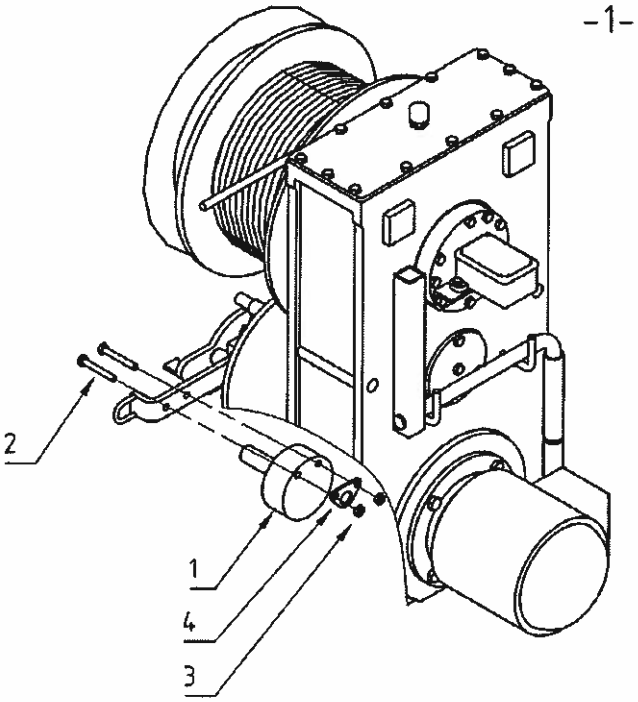

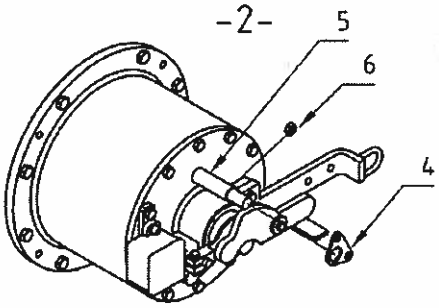

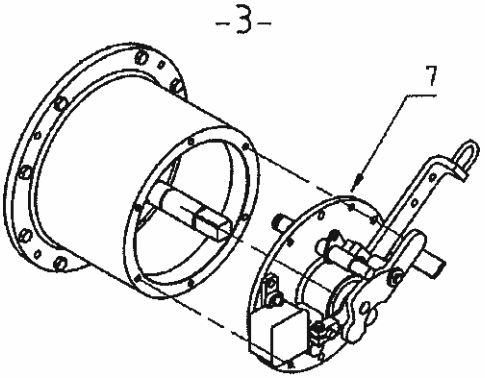

11.0. BRAKE SYSTEM OF LAUNCHING APPLIANCE WINCHES, type W02 and W04

The brake shoe linings should be periodically checked for wear and, on reaching their minimum permissible thickness following from the accompanying information sheet, they should be replaced, observing the prescribed properties of the linings and the rivets.
The period of time between two successive checks depending preponderantly on the frequency and way of operation and other factors; a generally applicable value is difficult to be prescribed. As a rule the linings should be checked for wear every 25 launching procedures or every year, whichever occurs earlier; an optimum interval will however be shown by own experience of trial and error.
At the occasion of the above mentioned checks the condition of other brake parts should be inspected as well and measures taken as appropriate.

NOTE: BEFORE STARTING ANY INSPECTION OF WINCH BRAKES, ALWAYS BE CERTAIN THAT:

- **NO LOAD/CRAFT IS HANGING FROM THE WIRE ROPE FALLS.**

11.1. SAFETY BRAKE SHOE ASSEMBLY

Please use the illustration sheet "Inspection brake lining centrifugal brake" in conjunction with the following:
To check the brake linings of the safety brake proceed as follows:

- Disassemble the brake cover as shown in the illustration "inspection brake lining stop brake".
- Remove the circlips of the brake shaft.
- Remove the stop brake unit (1) of the brake shaft.
- The safety brake (2) is now clearly visible. For a renewal of brake lining the brake levers can be removed without further disassembling.
- For assembly please proceed in opposite sequence.

Note:

- Single execution of safety brake is as shown, double or even triple executions are used as necessary.
- Four rivets per lining are to be applied.
- The springs should be treated with grease lubricants prior to assembly.
- Please inspect parts for wear and replace as necessary.

Maintenance manual,
life saving slewing crane

INSPECTION BRAKE LINING CENTRIFUGAL BRAKE

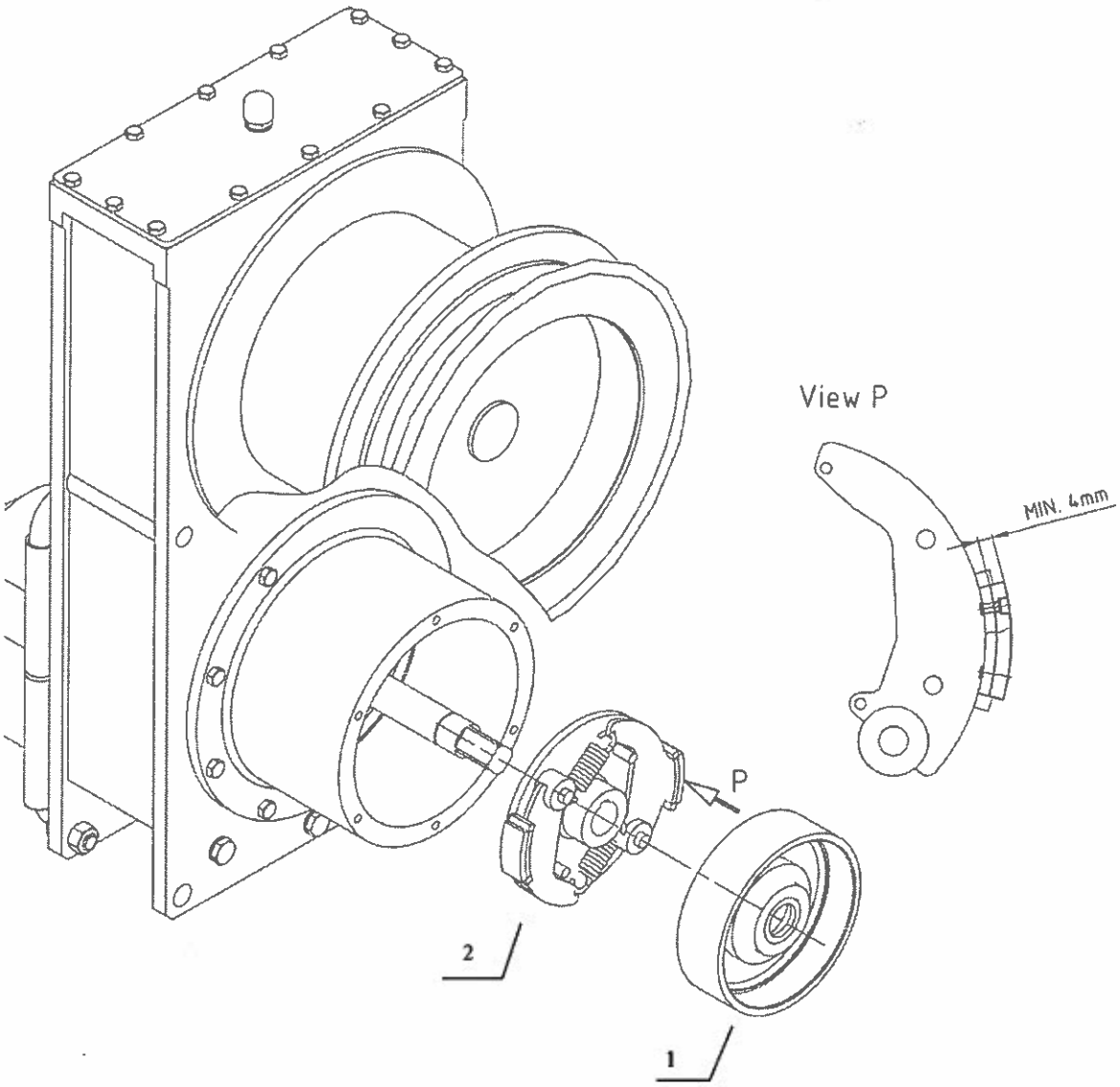

12.0. MAINTENANCE, liferaft, rescue boat and combined cranes.

In this chapter the required maintenance will be described; it is to be executed by the ship's crew.

Even though the interval of checking and maintaining the parts of a davit system depends on the frequency and way of operation, we have tried to give an estimation of the required intervals.

12.1. MAINTENANCE GROUP 1, ONE WEEK SERVICE
cranes of the types Rhs. only.

12.1.1. HYDRAULIC FLUID LEVEL
The level of the hydraulic fluid in the tank, normally situated on the crane column, should be checked every week. For this purpose a dip-stick has been mounted on the tank. The accumulator should be drained in advance by using the drain valve or by slewing the crane.

12.1.2. HYDRAULIC PRESSURE
The pressure of the hydraulic fluid, stored in the accumulator, must be checked. The pressure should be between the values mentioned on the enclosed arrangement drawing.

12.2. MAINTENANCE GROUP 2, ONE MONTH SERVICE
cranes of the types Rhs. only.

12.2.1. ACCUMULATOR / PRESSURE ALARM
The function of the hydraulic accumulator and of the pressure alarm should be checked. By draining the accumulator or by turning out of the davit the pressure will drop instantly. The following checks can be executed:

- Functioning of the manometer, which shows the pressure in the accumulator.
- By using the accumulator the pressure decreases to a certain value. At this moment the pressure suddenly drops to 0 bars. The lowest value registered is the gas pre-fill pressure. It should be approximately "P0" bars (see the enclosed arrangement drawing of the system).
- When the pressure drops, the electric switch starts the electric motor. Functioning of both components can be checked this way.
- Should the maximum pressure not be reached within a certain time limit (according the time-relays in the starter box) or should the hydraulic pump not stop after reaching this pressure then the electric motor is stopped and the alarm light is activated.

12.3. MAINTENANCE GROUP 3, THREE MONTHS SERVICE all crane types

12.3.1. DAVITS (greasing)

The davits have been provided with polyamide sheaves, running on stainless steel shafts. So: a special maintenance of the turning parts is not necessary.

All thread ends, required for adjustment purposes, must always be kept greased.

12.3.2. WINCHES (greasing)

All lubrication points, if any, must be lubricated by means of a high pressure grease gun at regular intervals.

12.3.3. WIRE ROPES (greasing)

The wire ropes must be greased at regular intervals. The applied grease should be slightly heated beforehand.

12.3.4. OIL LEVEL CHECK

The oil level in the gearbox of the winch(es) and of the slewing gear (if any) must be checked. For this purpose a level plug has been installed on each housing.

12.3.5. BRAKE GEAR

The brake gear and the brake control mechanism should be checked periodically. The checking procedure has been described in the paragraph "brake gear and brake control mechanism".

12.3.6. RESCUE BOAT / LIFERAFT RELEASE HOOK

The hooks must be checked and greased at regular intervals. Checking of the proper functioning is required.

12.3.7. STORES HOOK (if any)

The hook of the stores handling appliance must be checked for excessive corrosion and/or extreme wear or damage. The hook is to be replaced if need be.

12.4. MAINTENANCE GROUP 4, ONE YEAR SERVICE

12.4.1. HYDRAULIC SYSTEM (oil change)
cranes of the types Rhs. only.

The complete quantity of hydraulic oil must be replaced once a year. Before draining the oil tank, the accumulator should be drained: its contents is automatically led to the tank when the cock valve is opened. During the changing of the oil, the following should be kept in mind:

DIRT IS POISSON TO EVERY HYDRAULIC INSTALLATION.

Only absolute and perfect cleanliness will ensure a faultless operation of the equipment.

12.4.2. WINCHES (oil change), all crane types
SLEWING GEAR, crane of the types Rhs. and Res. only.

All gearboxes have the tooth wheels running in an oil bath; the oil must be changed once a year. The gearboxes have been provided with a drain plug on the lower side. Before filling the gearbox with new oil, it should be cleaned thoroughly with scouring oil. The quantity of oil has been indicated on the enclosed arrangement drawing.

12.4.3. SAFETY BRAKE

The safety brake linings should be checked on wear. The method is described in paragraph "brake system of launching appliance winches".

12.4.4. INSTALLING/CHANGING OF WIRE ROPES

Special attention is drawn to the necessity for checking that the wire rope falls are running on the drum from the correct side. This must be checked before un-reeving the rope falls.

When wedge cases are used for connecting the wire rope, the wire rope which is under strain, must from one line with one side of the wedge casing.

The windings on the drum must be laid tightly against each other, they should not be laid over one another.

12.4.5. PAINTING

When repainting the davits, winches etc., it frequently happens that a further coat of paint is applied over the previous one, so that the free clearances between moving parts are entirely filled up with paint.

Consequently in the long run the moving parts seize up.

When repainting special attention must therefore be paid to the prior removal of the old coat of paint near the moving parts, at least on the dangerous areas. The grease nipples must never be painted, to avoid a stoppage in the grease channel.

12.4.6. SPARE PARTS

Periodically the presence of spare parts should be checked. For this purpose our recommendation can be found in the chapter "spare parts".

13.0. SPARE PARTS

For each system the following spare parts were recommended and they should be on stock in the ship:

For the types Lms.:

item	description	quantity
01	brake lining 200*30	1 set
02	centrifugal brake parts 250	1 set

For the types Lms.S., Rms. and Res.:

item	description	quantity
01	brake lining 200*30	1 set
02	centrifugal brake parts 250	1 set
03	limit switch	2

For the types Rhs.:

item	description	quantity
01	brake lining 200*30	1 set
02	centrifugal brake parts 250	1 set
03	limit switch	2
04	pressure switch	1

DRAWINGS
project 0851A03
Rescue boat
crane Rhs.13/3,5

Global Davit GmbH
Survival- & Deck Equipment

Yard	Meridien Maritime Réparation Matane, Quebec Canada
Hull	H-010, "Leim"
Classification	American Bureau of Shipping
Flag state	Canada
Requirements	SOLAS 1974, with latest amendments

MAIN DATA:

Suppliers reference nr. 0851A03

Technical data

S.W.L.	- boat	10 kN
	- liferaft	\
	- stores handling	\
Radius	- life saving	3,5 m
	- stores handling	\

Global Davit GmbH - Survival- & Deck Equipment

Graf Zeppelin-Ring 2
D-27211 Bassum
Postfach 1308
D-27203 Bassum

Telefon: +49 4241 93-35-0
Telefax: +49 4241 93-35-25
E-Mail: info@global-davit.de
Internet: www.global-davit.de

Kreissparkasse Syke
(BLZ 291 517 00) Kto.-Nr.131 000696 8
IBAN: DE20 2915 1700 1310 0069 68
BIC: BRLADE21SYK

Commerzbank Diepholz
(BLZ 256 413 02) Kto.-Nr.6205603
IBAN: DE17 2564 1302 0620 5603 00
BIC: COBADEFF

HRB 111084 AG Walsrode
VAT Nr. DE 812 799 894
Geschäftsführer:
H.D. Bergmann

LIST OF ACCOMPANYING DRAWINGS

For reason of simplifying the installation works, the boarding procedure and the maintenance the following documents have been inserted:

Description	reference nr.
Arrangement and data for deck foundation Rhs.13/3,5	1-3848
Operation / maintenance instructions HR.15	1 sheet
Arrangement winch, type W02E.01.21	3-1766
Section brake 200*30	1-1404
Assembly centrifugal brake parts	3-2083
Adjustment procedure spindle limit switch	4-0859
Arrangement column C05H.04.01	2-0447
Arrangement remote control H-SG	2-0263
Electric circuit diagram	07GD113a-T01
Arrangement hydraulic unit HSP.05/10.05	2-1672
Documentation hydraulic components	
- pump unit	2 sheets
- pressure relief valve MV	1 sheet
- pressure switch DG	1 sheet
- control valve SD/4	2 sheets
- hand pump HD	1 sheet
- accumulator Hydac	4 sheets

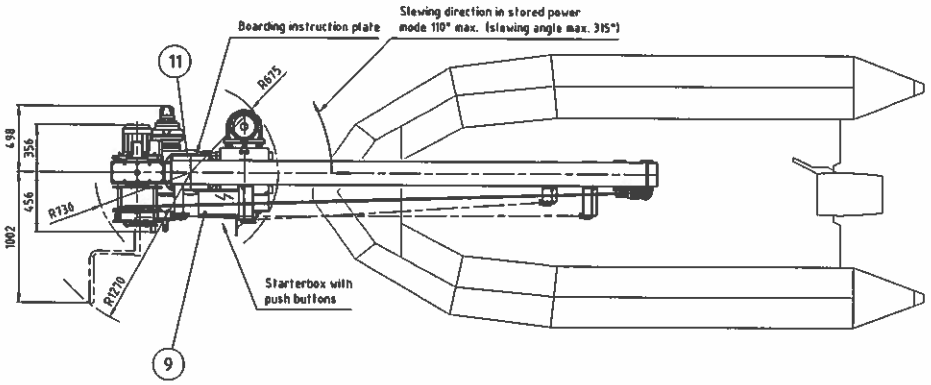

Actual deck situation
scale 1:50

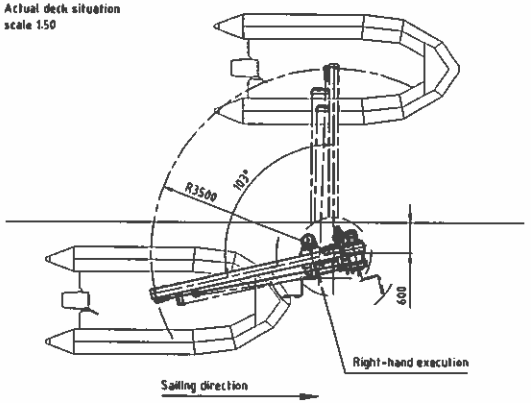

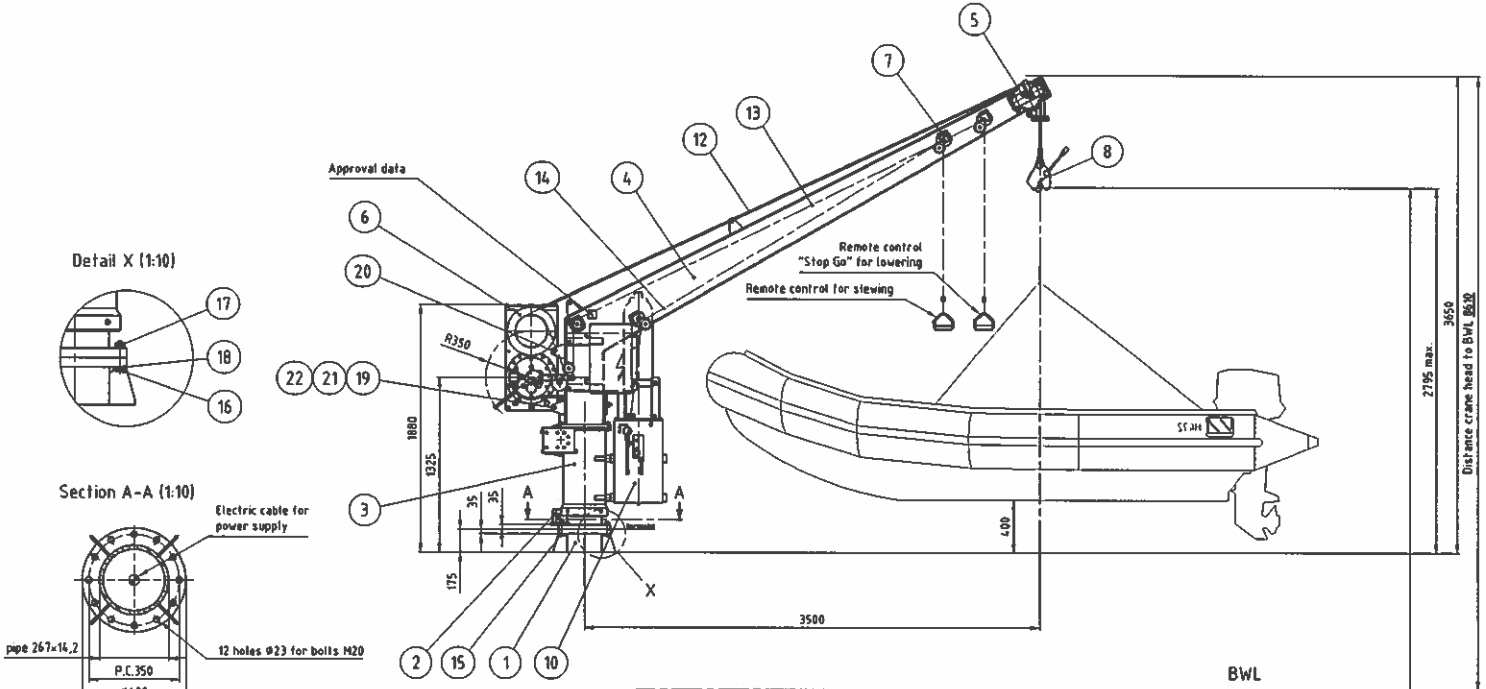

USCG approval nrs
system: 160.132/109/0
winch : 160.115/75/0

NC DOT Ferry Division

Tensioning torque recommendations [Nm]				
	Oil lubricated		MoS2 lubricated	
	(8.8)	(10.9)	(8.8)	(10.9)
M16	190	270	160	220
M20	370	520	300	420
M24	640	900	520	720
M27	950	1350	760	1080
All connection parts must be galvanized				

Static forces on deckfoundation
(incl. inclination of 20°/10°)

Mk = 70 kNm
Msl = 21 kNm
Fax = 28 kN

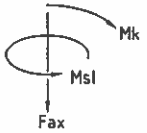

LEFT-HAND EXECUTION IS SHOWN
RIGHT-HAND EXECUTION IS IN OPPOSITE HAND

item	aantal	omschrijving	materiaal	remarks	mass [kg]	mass [kg]
					422	946
22	6	Washer A21	St.	DIN 125		
21	2	Hex nut M20	8	DIN 934		
20	2	Hex screw M20×35	8.8	DIN 933		
19	2	Hex screw M20×55	8.8	DIN 933		
18	23	Washer 21	C45	DIN 6916		
17	12	Hex nut M20	10	DIN 6915	1	
16	9	Hex bolt M20×105	10.9	DIN 6914	3	
15	3	Hex bolt M20×120	10.9	DIN 6914	1	
14	1	Wire rope 4mm, L=5,5m	Staint.st.			
13	1	Wire rope 4mm, L=21m	Staint.st.		2	
12	1	Wire rope 12mm, L=20m	1960 N/mm²	Classic	12	
11	1	Boarding instruction plate Rhs.	3-4272	GBR/FRA		
10	1	Hydraulic assembly	2-1672		280	
9	1	Electric assembly	07GD113a-T01		30	
8	1	Rescue boat hook HR.15	4-3610			5
7	1	Arr. remote control H-SG, C05/W02	2-0263		2	16
6	1	Arrangement winch 02E.01.21	3-1766	see D-base	47	314
5	1	Assembly components arm A05	2-0341		1	18
4	1	Davit arm 180×12/8×8 R=3,5	1-0328			309
3	1	Arrangement column C05H.04.01	2-0447	see D-base	63	243
2	1	Slewing angle limiter 05	3-0090			4
1	1	Pedestal 05/175/gusset	4-0346			37

TEST LOADS (WORKSHOP):

STATIC TEST LIFERAFT:	n.a.
STATIC TEST RESCUE BOAT	7,3×13 = 20,6 kN
DYNAMIC TEST RESCUE RECOVERY:	1,0×13 = 13 kN
DYNAMIC TEST INCLINED 20°X10°	1,1×12,65 = 14 kN
DYNAMIC TEST WINCH (LOWERING)	1,1×13 = 14,3 kN
ALL STORES HANDLING FUNCTIONS	n.a.

TEST LOADS (ON BOARD):

DYNAMIC TEST (LOWERING ONLY)	1,1×13 = 14,3 kN
ALL STORES HANDLING FUNCTIONS	n.a.

DAVIT MAIN DATA:

S.W.L. LIFERAFT:	n.a.
S.W.L. RESCUE BOAT	13 kN
OUTREACH	3,5 m
S.W.L. STORES HANDLING	n.a.
OUTREACH	- m
SLEWING SPEED - direct power	n.a.
- stored power	1 rpm
TOTAL MASS OF SYSTEM	1400 kg

LIFE SAVING WINCH DATA:

WINCH TYPE	02E.01
HOISTING SPEED	21,9 m/min
GRAVITY LOWERING SPEED	34 m/min @ 9,4 kN
WIRE ROPE SIZE	12 mm
MINIMUM REQUIRED BREAKING LOAD	82,1 kN
TYPE OF WINCH	spur gear winch
OIL QUANTITY:	1 l
POWER CONSUMPTION	4,5 kW
NOMINAL CURRENT	12 A
STARTING CURRENT	68 A

STORES WINCH DATA

WINCH TYPE:	n.a.
HOISTING/LOWERING SPEED	- m/min
WIRE ROPE SIZE	- mm
MINIMUM REQUIRED BREAKING LOAD	- kN
TYPE OF WINCH	-
OIL QUANTITY	- l
POWER CONSUMPTION	- kW
NOMINAL CURRENT	- A
STARTING CURRENT	- A

ELECTRIC MAIN DATA:

VOLTAGE:	460 V
FREQUENCY:	60 Hz
MAX. RATED POWER	8,3 kW
PROTECTION - on deck	IP56
- underdeck	n.a.
INSULATION CLASS	F
CONTROLS - boat winch	on starter box
- stores winch	n.a.

HYDRAULIC MAIN DATA:

WORKING PRESSURE	200 bar
OIL FLOW	3,8 l/min
TANK CAPACITY:	90 l
ACCUMULATOR VOLUME	35 l
PRECHARGE PRESSURE	100 bar
POWER CONSUMPTION	1,8 kW
NOMINAL CURRENT	3 A
STARTING CURRENT	30 A

CRAFT MAIN DATA:

BOAT TYPE:	Zodiac Hurricane/ H 472 OB
DIMENSIONS	4,7×2,04×0,51 m
MASS OF BOAT WITH EQUIPMENT:	455 kg
ACTUAL BOAT CAPACITY:	6 persons
LOWERING MASS	905 kg
RECOVERY MASS	940 kg
LIFERAFT CAPACITY:	n.a.
LOWERING MASS	- kg

Survival- & Deck Equipment
Global Davit GmbH

Rescue boat crane Rhs.13/3,5

General Arr. Meridien Maritime, hull H-808/-/010

Copyright ©GDG b.v. All rights reserved

PROJECTION

SCALE	DATE	NAME	CHECKED
1:20	22-11-2010	HS	
	REPLACING		

1-3848

DRC13A05/-/03

Global Davit GmbH
Survival- & Deck Equipment

Rescue boat hook

model HR.15

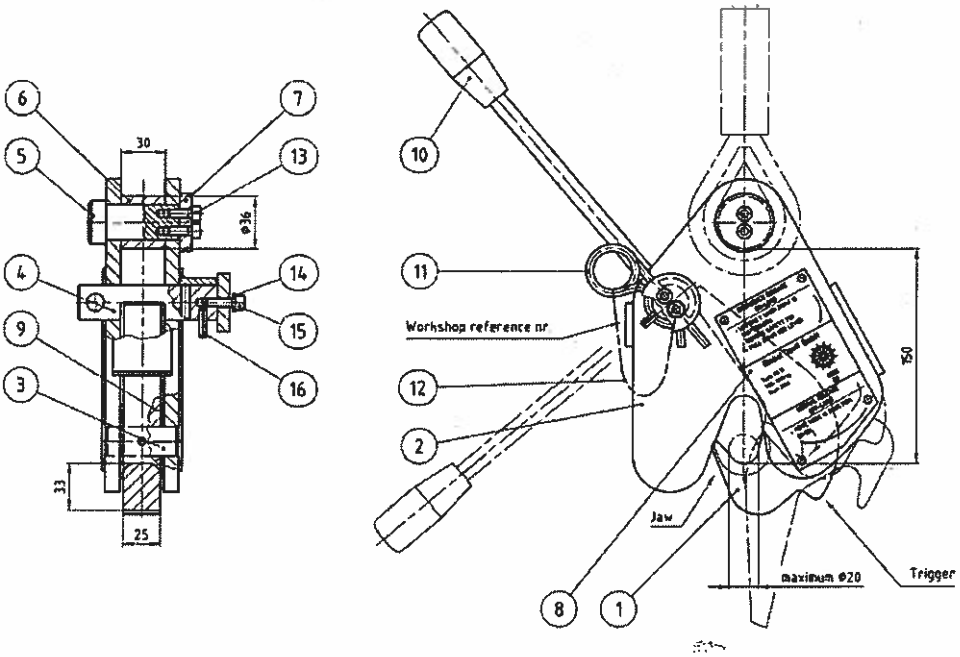

01	hook	09	spacer
02	housing	10	hand grip
03	pin	11	spring
04	securing shaft with lever	12	wire rope
05	shaft for suspension	13	hex socket screw
06	distance bush	14	washer
07	securing plate	15	hex socket screw
08	instruction plate/cover	16	dowel pin

The **Global Davit** model HR.15 rescue boat hook is manufactured in accordance with SOLAS 1983 rules which require a combination of 'on-load / off-load' capability. The Safe Working Load is 15 kN (3300 pounds).

WARNING: REMOVING THE SAFETY PIN AND ACTUATING THE EMERGENCY RELEASE HANDLE WILL INSTANTLY DROP THE RESCUE BOAT FROM ANY HEIGHT.
THIS PROCEDURE SHOULD ONLY BE PERFORMED IN THE GRAVEST OF CONDITIONS AND ONLY AS A LAST RESORT.

Global Davit GmbH - Survival- & Deck Equipment

Graf-Zeppelin-Ring 2
D-27211 Bassum
Postfach 1308
D-27203 Bassum

Telefon: +49 4241 93-35-0
Telefax: +49 4241 93-35-25
E-Mail: info@global-davit.de
Internet: www.global-davit.de

Kreissparkasse Syke
(BLZ 291 517 00) Kto.-Nr.131 000696 8
IBAN: DE20 2915 1700 1310 0069 68
BIC: BRLADE21SYK

Commerzbank Diepholz
(BLZ 256 413 02) Kto.-Nr.6205603
IBAN: DE17 2564 1302 0620 5603 0
BIC: COBADEFF

HRB 111084 AG Walsrode
VAT Nr. DE 812 799 894
Geschäftsführer:
H.D. Bergmann

Operating instructions

Global Davit GmbH
Survival- & Deck Equipment

CAUTION: NEVER ALLOW UNTRAINED PERSONNEL TO OPERATE THE HR.15 HOOK.

INSTALLATION

- remove screws <12>.
- remove washer <11> and bolt <9>.
- take out distance bush <10> (if any).
- place distance bush in spliced eye of wire rope and place bush in proper position.
- install bolt and washer.
- place screws.

NORMAL OPERATION off-load release

- lower boat to the water by davit or crane.
- open hook by sliding back the 'trigger'. located on the lower part of the hook.

RELOCKING AFTER NORMAL RELEASE

- push lifting ring upward into the jaw of the hook and hook will automatically lock into the lifting ring.
- commence recovery.

EMERGENCY OPERATION on-load release

- remove safety pin from emergency release handle shaft.
- pull down emergency release handle.
  - hook will open instantly.
  - rescue boat will instantly drop to the water with possible injury to occupants and rescue boat damage.

RELOCKING AFTER EMERGENCY RELEASE

- rotate hook back into the original position.
- lift emergency release handle up and into it's original locked position.
- re-insert safety pin into release handle shaft.
- push lifting ring upward into the jaw of the hook and hook will automatically lock into the lifting ring.
- commence recovery.

WARNING: REMOVING THE SAFETY PIN AND ACTUATING THE EMERGENCY RELEASE HANDLE WILL INSTANTLY DROP THE RESCUE BOAT FROM ANY HEIGHT.
THIS PROCEDURE SHOULD ONLY BE PERFORMED IN THE GRAVEST OF CONDITIONS AND ONLY AS A LAST RESORT.

Global Davit GmbH - Survival- & Deck Equipment

Graf-Zeppelin-Ring 2
D-27211 Bassum
Postfach 1308
D-27203 Bassum

Telefon: +49 4241 93-35-0
Telefax: +49 4241 93-35-25
E-Mail: info@global-davit.de
Internet: www.global-davit.de

Kreissparkasse Syke
(BLZ 291 517 00) Kto.-Nr.131 000696 8
IBAN: DE20 2915 1700 1310 0069 68
BIC: BRLADE21SYK

Commerzbank Diepholz
(BLZ 256 413 02) Kto.-Nr.6205603
IBAN: DE17 2564 1302 0620 5603 0
BIC: COBADEFF

HRB 111084 AG Walsrode
VAT Nr. DE 812 799 894
Geschäftsführer:
H.D. Bergmann

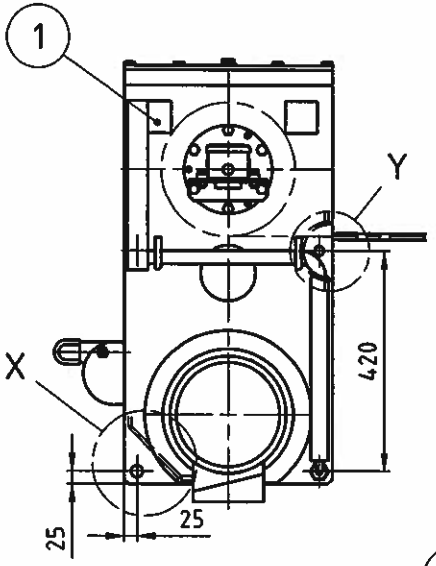

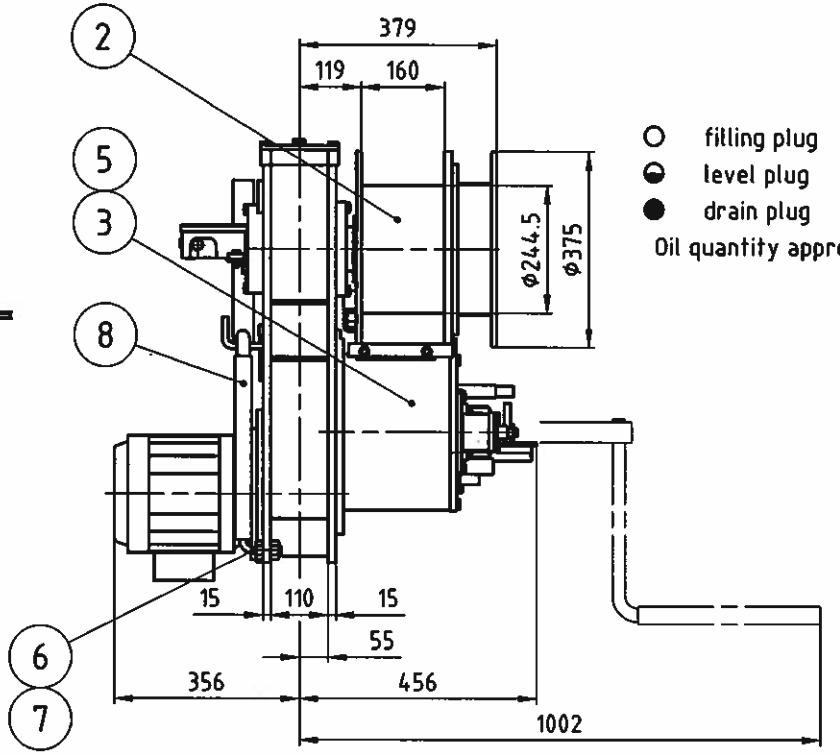

filling plug
level plug
drain plug
Oil quantity approx.: 1 l

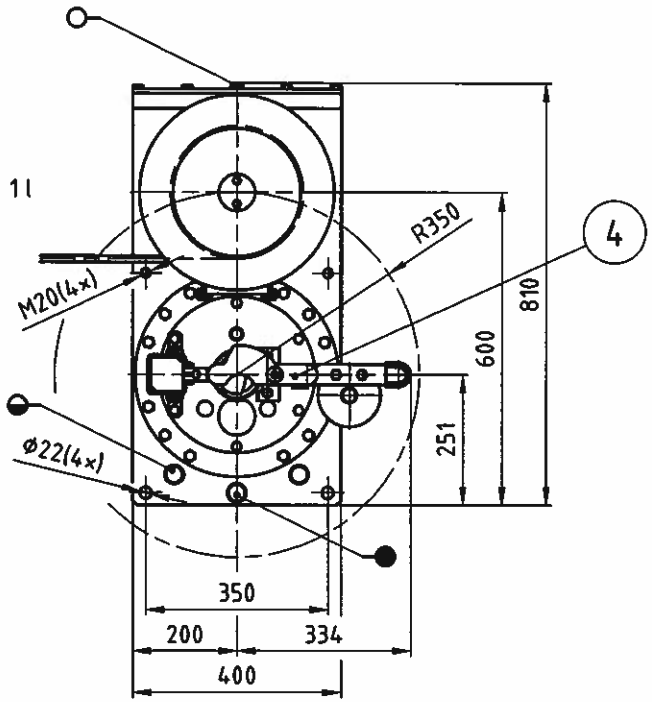

Topview

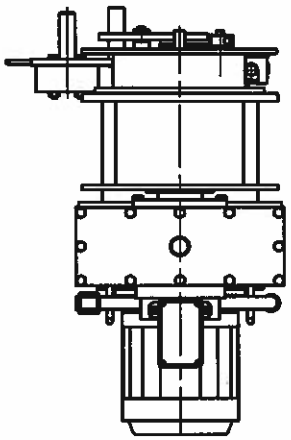

Detail Y (1:5)

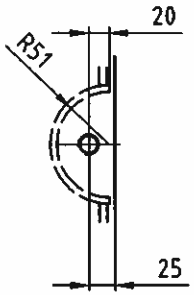

Detail X (1:5)

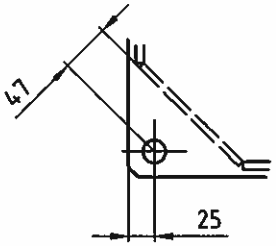

Right-hand execution is as shown
Left-hand execution is in opposite hand

ITEM	QUANT	DESCRIPTION	MATERIAL	REMARKS	MASS P	MASS S
					47	314
8	1	Crank handle R350/300	3-0047			5
7	1	Support for crank handle	4-0041			
6	1	Hex nut M20	8	DIN 934		
5	1	Centrifugal brake assembly	3-2083	250 S1-A0-5,0		1
4	1	Arr. brake lever 02/SG	3-1764			7
3	1	Section brake 200×30 winch 02E	1-1404	RH exec.	3	79
2	1	Section drum 02 kNm/SG	3-0891			52
1	1	Section gearbox 02E	1-0223		44	170

C	Position junction box E-motor changed	ROCMN	09-11-06	
B	Item 5 drawing number and code changed	HS	21-09-05	
A		HS		
	description	name	date	

Maritime Design Office

Copyright MDO b.v. All rights reserved

PROJECTION

Arrangement winch 02E.01.21

SCALE	DATE	NAME	CHECKED
1:10	21-06-2004	RR	HS
	REPLACING		
	COPY OF	3-0900B	

3-1766

Standard

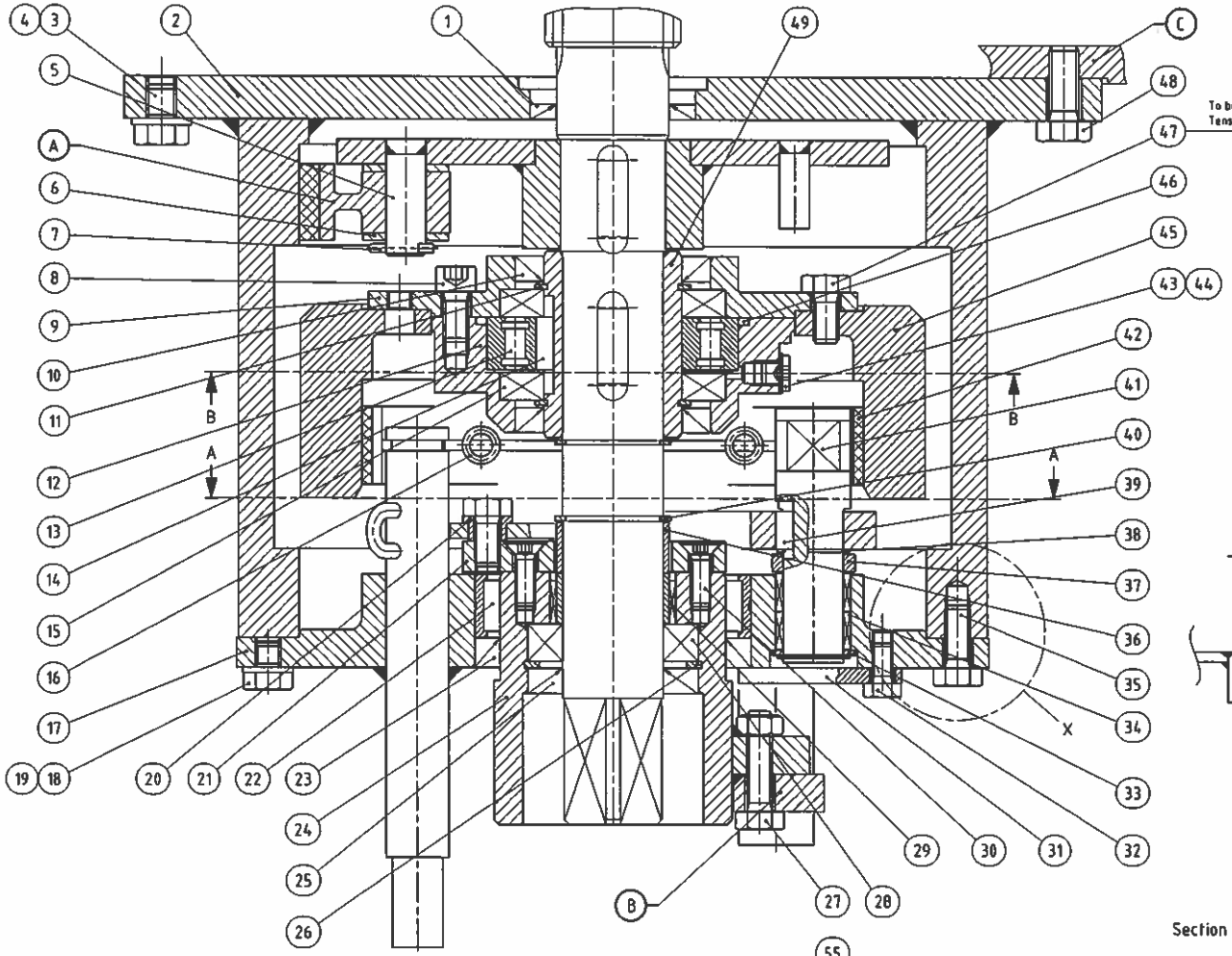

Section A-A (1:2)

This brake section is connected to:

A	Centrifugal brake parts
B	Brake lever
C	Section gearbox

- All moving parts to be greased
- Brake shaft to be greased prior to assembly of brake drum
- Brake material to be degreased
- All sharp edges in way of seals to be removed prior to ass'y
- All flanges and covers to be mounted with liquid sealant

Detail X

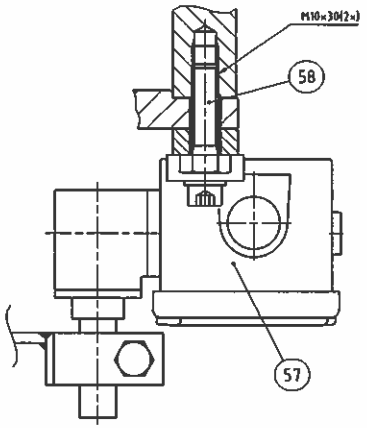

Section B-B (1:2)

Free rotating direction

Left-hand winch

View prior to assembly

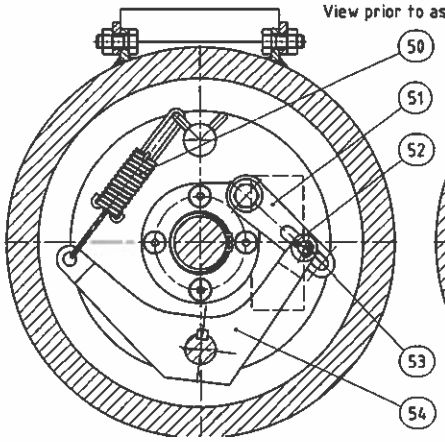

Right-hand winch

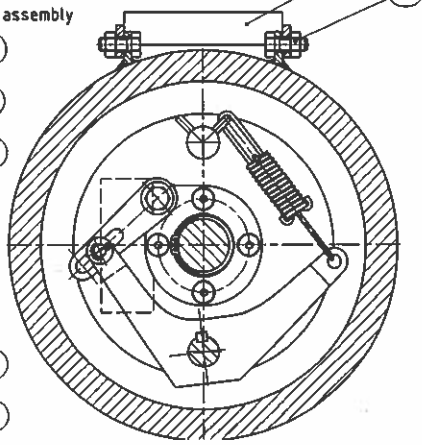

Left-hand winch

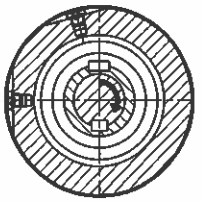

Right-hand winch

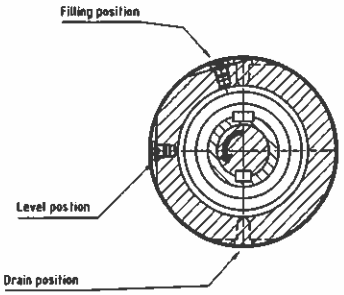

					3	79
58	2	Hex screw M10×30	8.8	DIN 933		
57	1	Arrangement electric switch	4-1830		1	
56	6	Hex nut M10	8	DIN 934		
55	1	Securing bar	4-0658			
54	1	Lever for brake control	3-0145			1
53	1	Pin for Brake lever	4-0027			
52	1	Splitpin 2.5×20	Cu	DIN 94		
51	1	Connection lever	4-0233			
50	1	Spring brake control 02	4-0237			
49	1	Bush 55/40×74	3-0395			1
48	8	Hex screw M12×30	8.8	DIN 933		
47	7	Hex screw M10×20	8.8	DIN 933		
46	1	O-ring ø100×ø4	NBR 72 Shore	Simrit		
45	1	Drum for stop brake 200×30 Winch 02/04 kNm	3-1697			12
44	2	Sealing ring 10×16×1	Cu	DIN 7603		
43	2	Hex socket plug M10×1	5.8	DIN 908		
42	2	Brake pad rd.200×30	-		1	
41	1	Shaft for brake control	4-0234			
40	2	Circlip 40×1.75	-	DIN 471		
39	1	Key 8B×7×16	St.60	DIN 6885/1		
38	2	Circlip 24×1.2	-	DIN 471		
37	1	Spacer 34/24×7	4-0235			
36	2	Bearing ring IR40×45×20	-	INA		
35	8	Hex screw M10×25	8.8	DIN 933		
34	2	Needle bearing K24×30×15.ZW	-	INA		
33	1	Spacer 34/24×2	4-0022			
32	3	Hex screw M8×16	8.8	DIN 933		
31	1	Cover	4-0035			
30	4	Hex sock. counters.head scr. M8×25	8.8	DIN 7991		
29	1	Needle bearing K45×50×17	-	INA		
28	1	Ball bearing 6008 (40×68×15)	-	SKF		
27	2	Hex screw M10×40	8.8	DIN 933		
26	1	Circlip 68×2.5	-	DIN 472		
25	1	Seal 40×68×10 BA	-	DIN 3760		
24	1	Holder for brake lever	3-0389			3
23	1	Seal 90×110×12 BA	-	DIN 3760		
22	1	Needle bearing NK90/25	-	SKF		
21	1	Activator for brake lever	4-0448			1
20	1	Distance bush	4-0236			
19	5	Washer A10.5	St	DIN 125		
18	4	Hex screw M10×12	8.8	DIN 933		
17	1	Cover for brake house SG	2-0095			12
16	2	Spring stop brake 02/04	4-0200			
15	2	Ball bearing 16011 (55×90×11)	-	SKF	1	
14	1	Key B16×7×21	St.60	DIN 6885/3		
13	1	Freewheel coupling FCN55 CF	-			
12	1	Housing for freewheel FCN55 CF	3-0394			2
11	2	Circlip 55×2	-	DIN 471		
10	2	Seal 55×78×10 BA	-	DIN 3760		
9	1	Housing for bearing 16011	3-0388			2
8	6	Hex socket head cap screw M10×20	8.8	DIN 912		
7	2	Splitpin 3×25	Cu	DIN 94		
6	4	Washer A17	St.	DIN 125		
5	1	Holder for centrifugal brake	2-0217			4
4	4	Washer A13	St.	DIN 125		
3	4	Hex screw M12×16	8.8	DIN 933		
2	1	House for brake 250	2-0225			41
1	1	Seal 45×66×6 BA	-	DIN 3760		
REQN	REMARKS	DESCRIPTION	MATERIAL	REMARKS	MASS F	MASS S

MDO Maritime Design Office

Copyright MDO b.v. All rights reserved

Section brake 200×30 winch 02E

SCALE	DATE	NAME	CHECKED	
1:1	25-06-2004	BR		1-1404
	REPLACING			Standard

Number of brake sets
Anzahl Brems-sätze

Detail A
Detail A

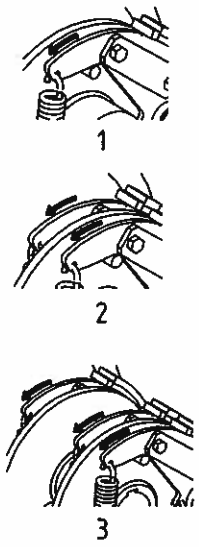

Brake levers to be mounted in same direction (see arrow).

Bremshebel in gleicher Richtung montieren (siehe Pfeil).

Pushing or Sliding
Schiebend oder Ziehend

View X
Ansicht X

P= Pushing / *Schiebend*

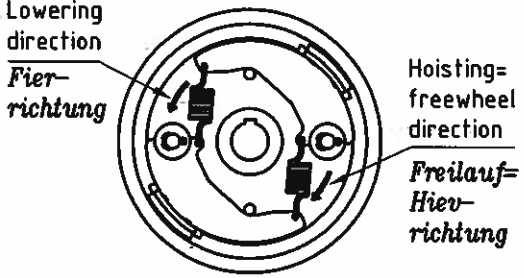

S= Sliding / *Ziehend*

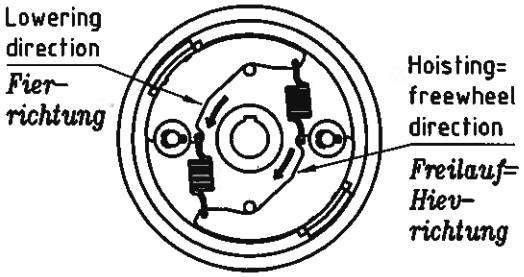

Size brake house
Grösse Bremsgehäuse

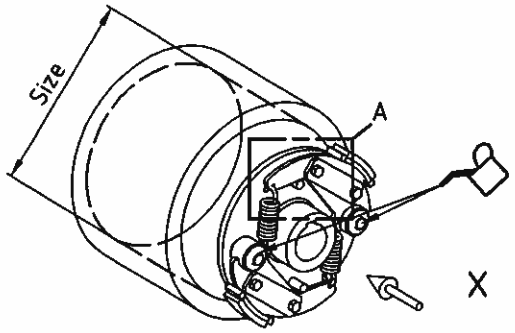

250	P	1	-	A	0	-	2,5 — 4-0095A
300	S	2		B	1		3,0 — 4-0118A
		3		C	2		3,5 — 4-0096A
							4,0 — 4-0097A
							4,5 — 4-0098A
							5,0 — 4-1821

Spring type
Feder type

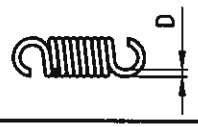

Example code: 250S1-A1-4,0
Beispiel code: 250S1-A1-4,0

Type brake pads
Type Bremshebel

250		300
4-2159 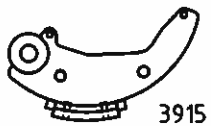 3915	A	4-2161 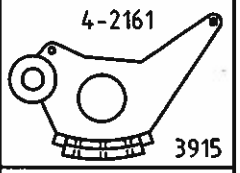 3915
3-1865 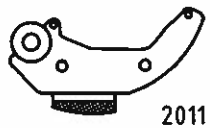 2011	B	2-1298A 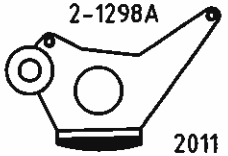 2011
4-2160 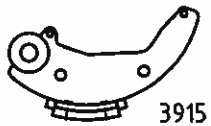 3915	C	Not Available

Weights per brake pad
Gewichte per Bremshebel

250	300
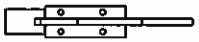 0	0
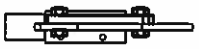 1 1 × 4-0558 2 × Screw M8×25 DIN933 2 × Nut M8	Not Available
2 2 × 4-0558 2 × Screw M8×30 DIN933 2 × Nut M8	2 1 × 4-0961B + 1 × 4-0964A 1 × Screw M10×40 DIN7991 Loctite

ITEM	QUANT	DESCRIPTION	MATERIAL	REMARKS	MASS P	MASS S

	name	description	date
H			
G			
F			
E			
D	CM	Material added by type brake pads	27-08-08
C	Rbs	View P changed to view X. Text in view X added.	04-09-06
B	HS	Drawings brake pads/levers corrected (levers mirrored), weights separated	07-02-06
A	RH	Drawing created, weights separated for size 250/300	02-10-05

MDO Maritime Design Office

Copyright MDO b.v. All rights reserved

PROJECTION

Centrifugal brake assembly
Zentrifugalbremsen Montage

SCALE	DATE	NAME	CHECKED
1:5	03-05-2005	HA	
	REPLACING		
	COPY OF	3-0901b	

3-2083
Standard

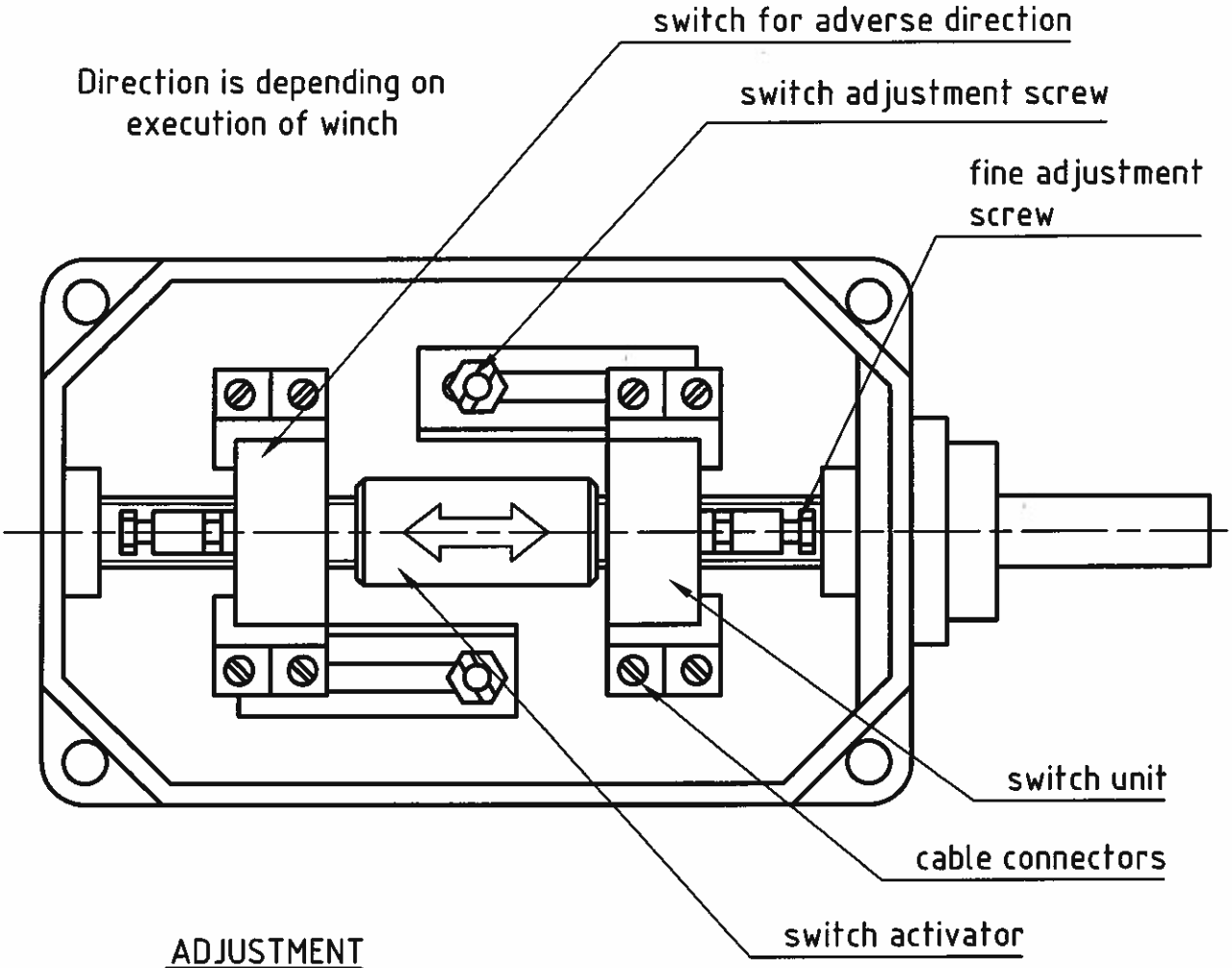

ADJUSTMENT

1- loosen switch adjustment screw
2- switch unit can be moved to left or right
take care that after power cut off the hook can run through.

NOTE

If fine adjustment screw is adjusted too tight, the proper function of the switch will be impossible.
Number of revolutions drum maximum 55!

ITEM	QUANT	DESCRIPTION	MATERIAL	REMARKS	MASS P	MASS S

A	Rbs	Adjustment remarks added	27-08-00

Maritime Design Office

Copyright MDO b.v. All rights reserved

PROJECTION

Adjustment procedure limit switch MSP452

one-speed rescue boat / lifeboat / stores winches

SCALE	DATE	NAME	CHECKED	
1:1	26-06-2001	Rbs		4-0859
	REPLACING			
	COPY OF			

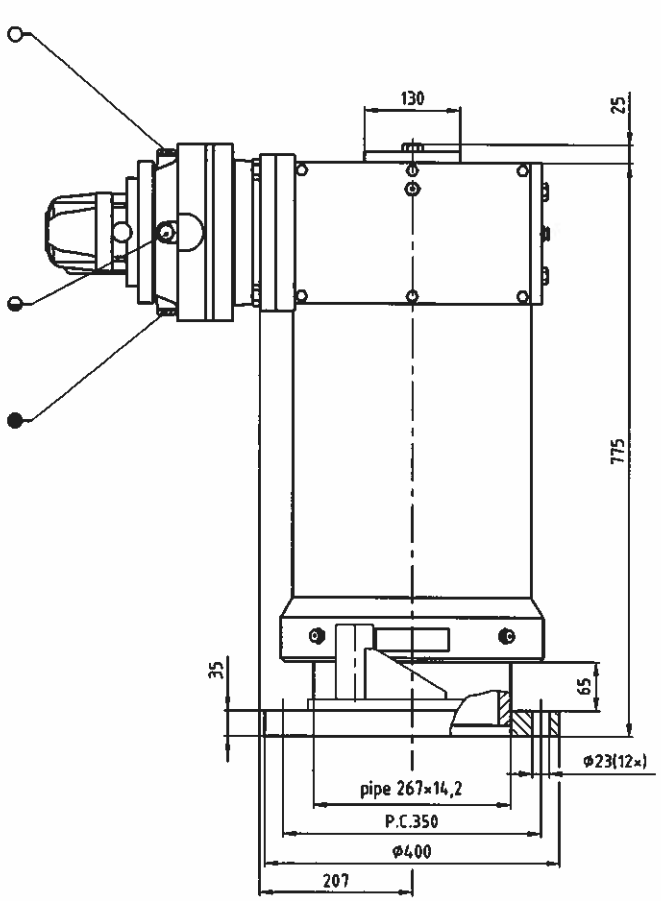

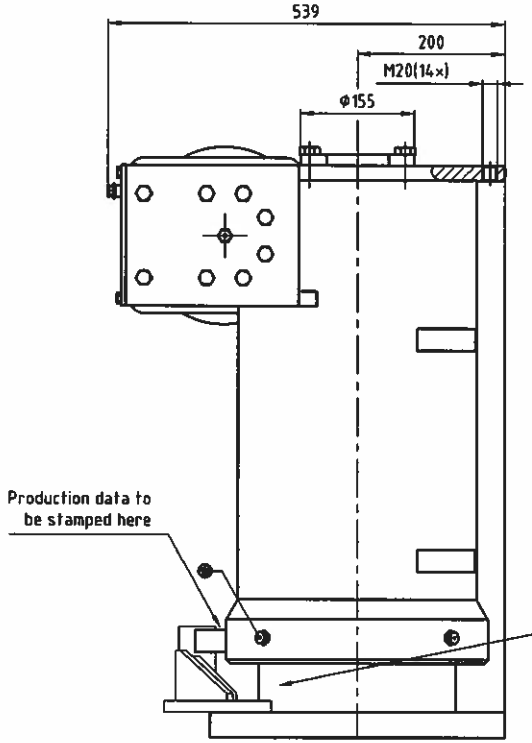

Slewing angle limiter

Only necessary when crane can rotate freely > 350° and a power supply is guided through the column. The slewing angle will be limited to 315°

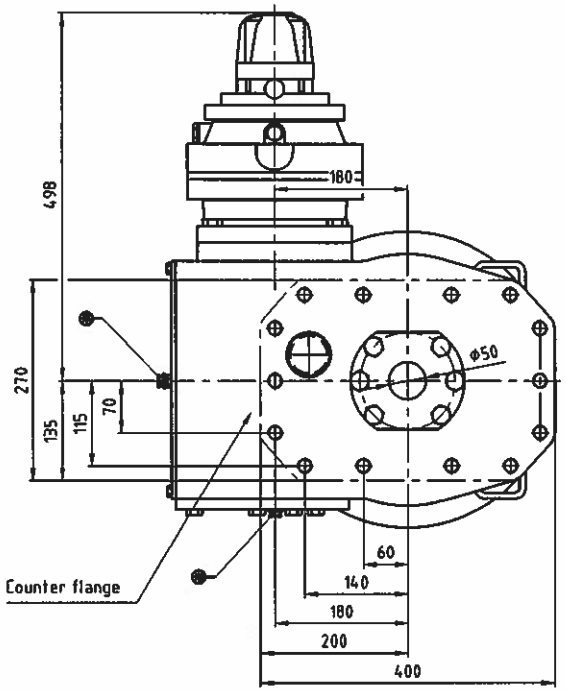

- ○ filling plug
- ◒ level plug
- ● drain plug

Oil quantity approx.:
planetary gear 1,2 l

● Grease nipple acc. DIN 3404

For greasing the gears inside, remove main cover

Left-hand execution is as shown
Right-hand execution is in opposite hand

ITEM	QUANT	DESCRIPTION	MATERIAL	REMARKS	MASS
1	1	Section column C05H.04.01	1-0421	L.H.exec	286

H					
G					
F					
E					
D	HS	Filling, level and drain plug planetary gear added	26.04.06		
C	BB	Wear pad fitting W. rail for slewing angle limiter	21.09.95		
B	HS	Axle cover, pinion protection	20.12.91		
A	MJ	Column adapted	05.11.81		
Issue		description	date		

Copyright MDO b.v. All rights reserved

Maritime Design Office

PROJECTION

Arrangement column C05H.04.01

SCALE	DATE	NAME	CHECKED
1:5	07.05.2001	HS	
	REPLACING		
	COPY OF	1-0469	

2-0447

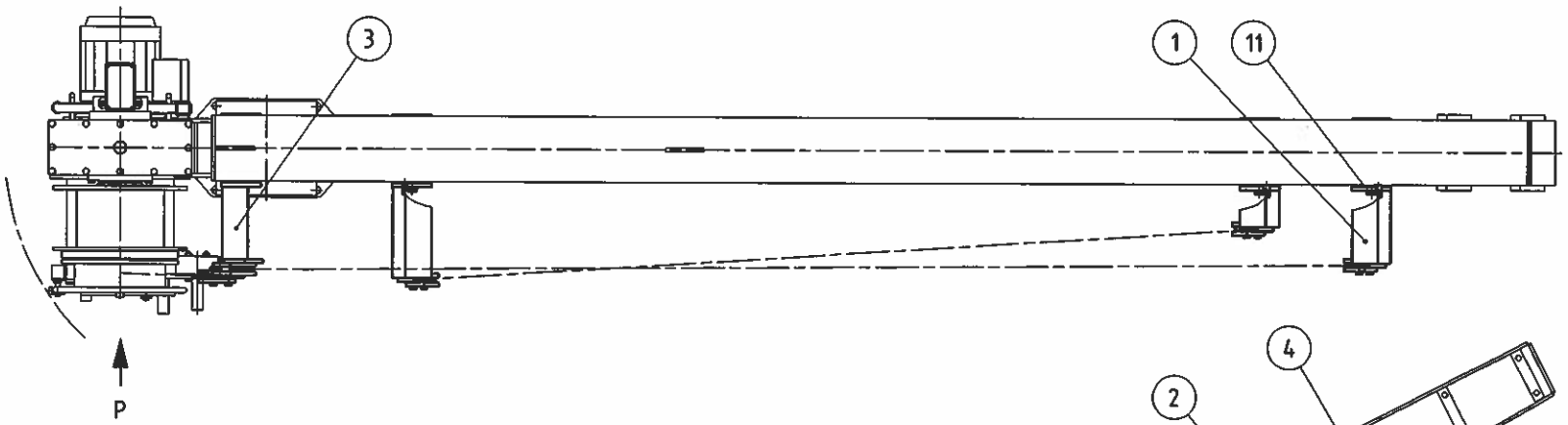

Left-hand crane as example

View P (1:2.5)

Typical detail
Skiffy bearing (1:2)

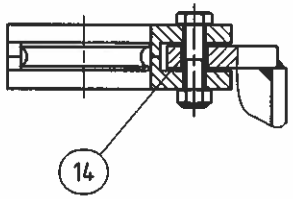

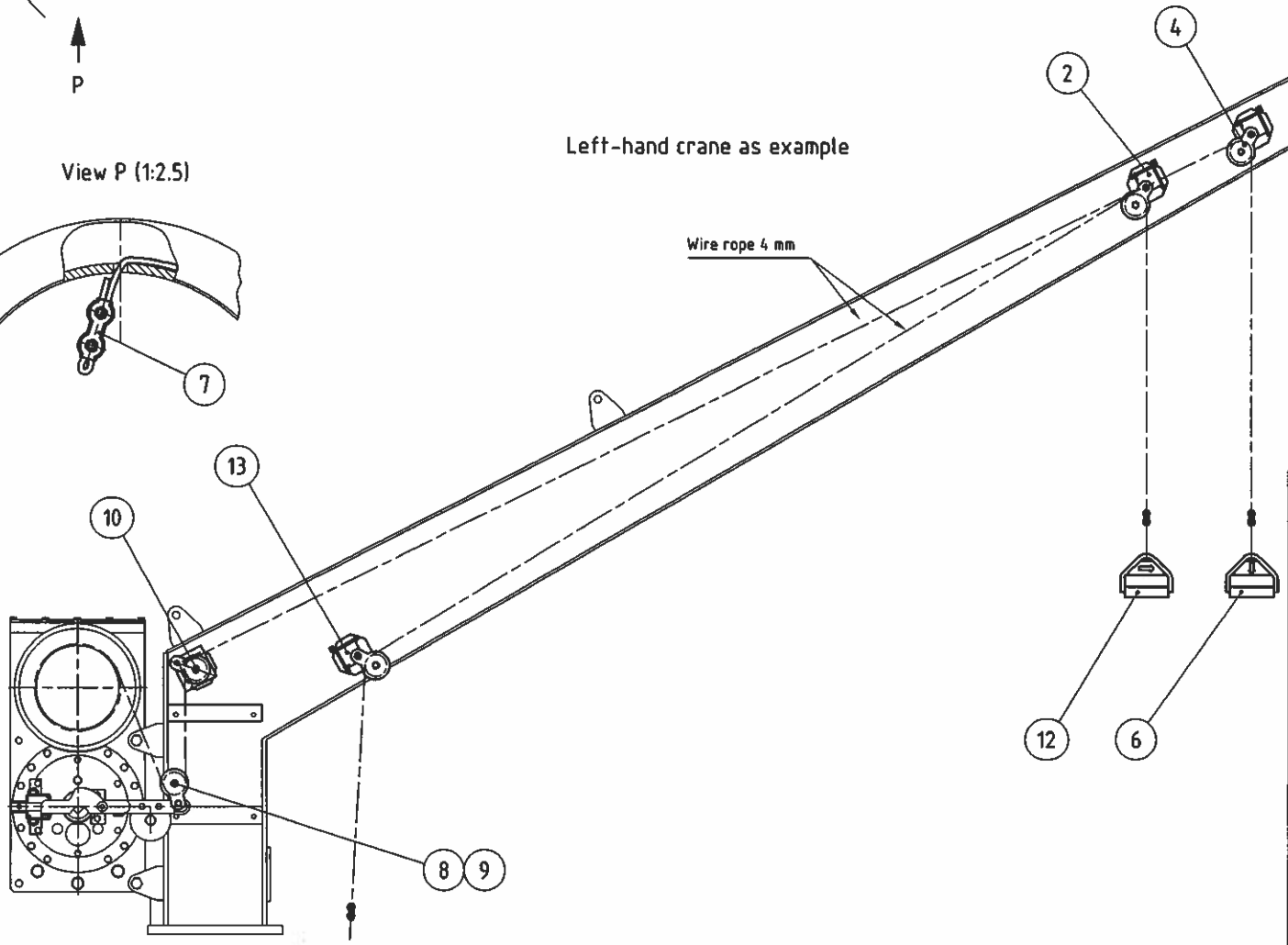

ITEM	QUANT	DESCRIPTION	MATERIAL	REMARKS	MASS P.	MASS S.
					2	15
14	3	Slide bearing 12/14x12 0087310114 42	PA-66	Skiffy		
13	1	Support for RC (250)	3-0882			4
12	1	Handgrip for slewing	4-0761			1
11	4	Hex screw M16x25	8.8	DIN 933		
10	1	Hex bolt M10x55	A4-70	DIN 931		
9	9	Hex prevailing torque nut M10	A4-70	DIN 985		
8	8	Hex bolt M10x45	A4-70	DIN 931		
7	4	Flat wire rope clip 4mm	Stainl.st.			
6	1	Handgrip for lowering	4-0057			1
5	0					
4	5	Sheave for remote control	4-0054		2	
3	1	Support for RC (200) fixed	3-0454			4
2	1	Support for RC (100)	3-0224			2
1	1	Support for RC (200)	3-0058			3

C	HS	Pos 5 removed, Pos 6 quantity changed, Pos 7 quantity changed, Pos 8 added	17-04-10		
B	HS	Pos 7 quantity changed, Pos 8 added	19-10-03		
A	RJ	Bumper bars & compact coil drum 10 added	05-03-02		
	name	description	date		

Maritime Design Office

Copyright MDO b.v. All rights reserved

PROJECTION

Arrangement remote control H-SG,

E05/W02

SCALE	DATE	NAME	CHECKED
1:10	23-05-2000	HS	
	REPLACING		
	COPY OF	2-0262	

2-0263

Drawing number:	07GD113a-T01
Projekt desciption:	Rescue boat / Liferaft crane
Supply line:	4x4 mm² (minimum)
Supply voltage:	380-480V 50/60Hz
Control voltage:	230V 50/60Hz
Protection category:	IP56
Year of manufacture:	2007
Modification date:	08.04.2011

Wiring Colors

Black:	Main Voltage
Red:	Control Voltage
Dark blue:	Low Voltage 24V
Bright blue:	Neutral Wire
Green/yellow:	Ground Wire
White:	Measuring Signals
Orange:	Separate Source Voltage

Adapted for power supply: 380 - 480V
M1: 13 - 18A
M2: 4 - 6,3A

Global Davit GmbH
Survival- & Deck Equipment

Global Davit GmbH

Graf-Zeppelin-Ring 2
D-27211 Bassum
Germany

Tel. +49 4241 933 5-0
Fax +49 4241 933 5-25
E-Mail info@global-davit.de
Internet www.global-davit.de

door:

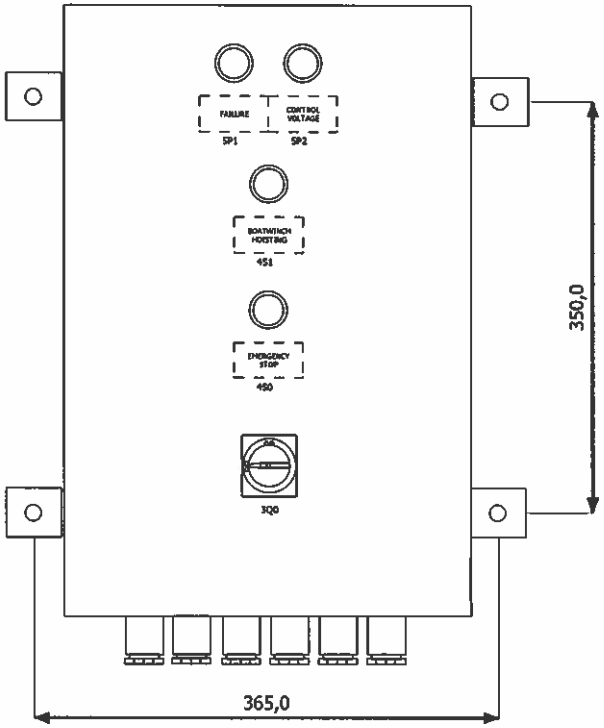

connection plate:

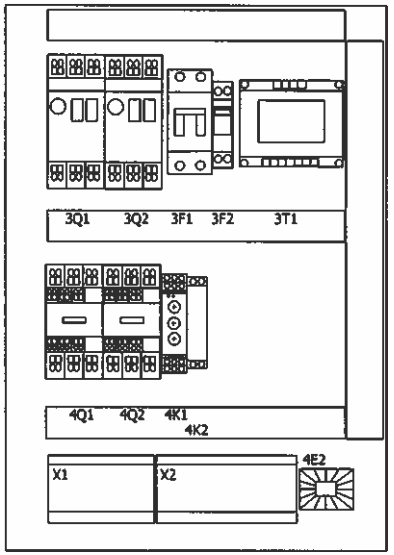

Dimensions:
cabinet: 520x320mm
connection plate: 470x300mm
IP56

			Date	18.08.2010	Rescue boat / Liferaft crane	Global Davit GmbH	CONTROL PANEL LAYOUT	07GD113a-T01	Sheet 2
			Arranged	matthias					last Sheet 6
			Checked						
Modification	Date	Name							

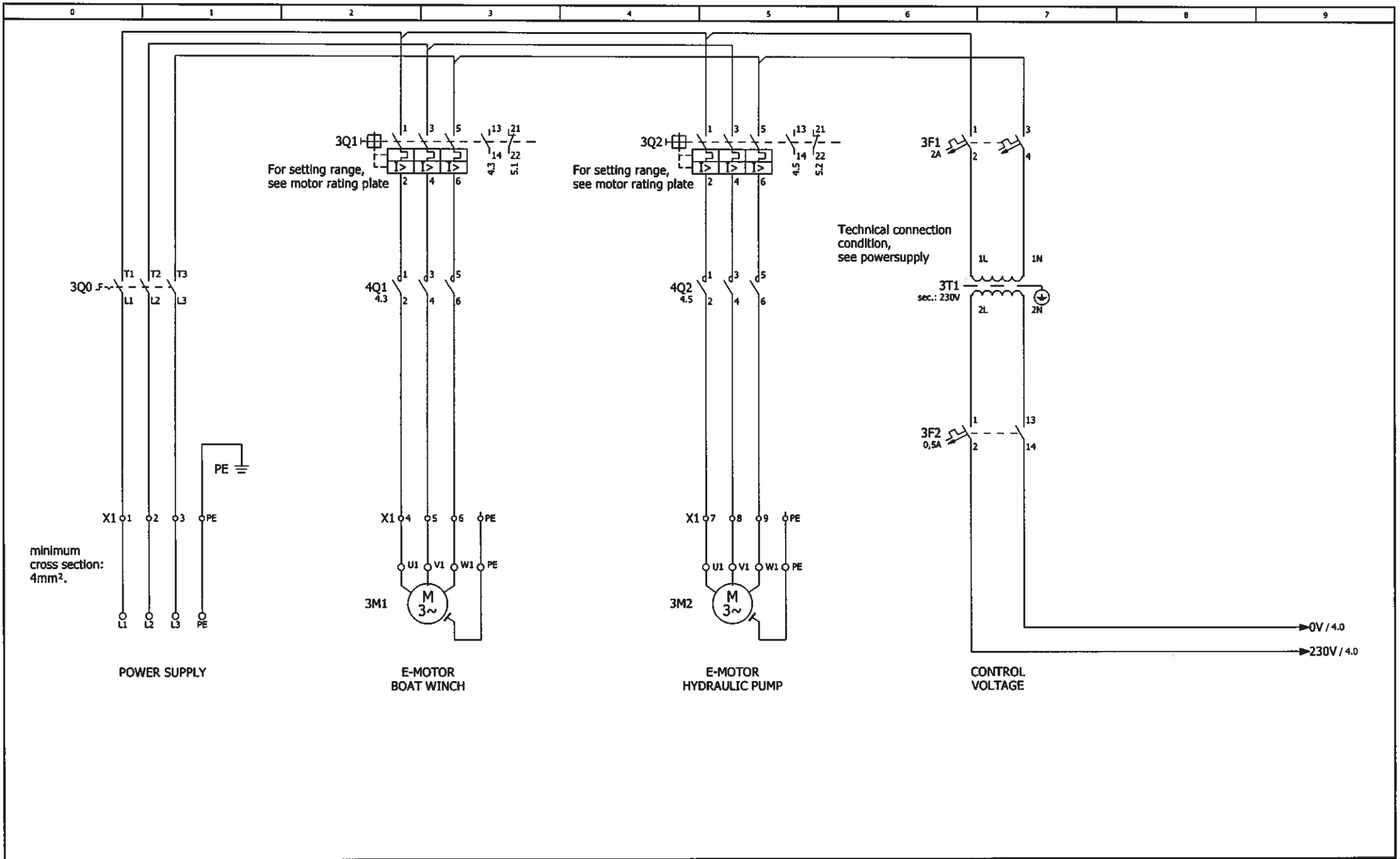

			Date	08.04.2011	Rescue boat / Liferaft crane	Global Davit GmbH	POWER SUPPLY MOTOR OUTLET CONTROL VOLTAGE	07GD113a-T01
			Arranged	Matthias				
			Checked					
Modification	Date	Name						

Sheet 3
last Sheet 6

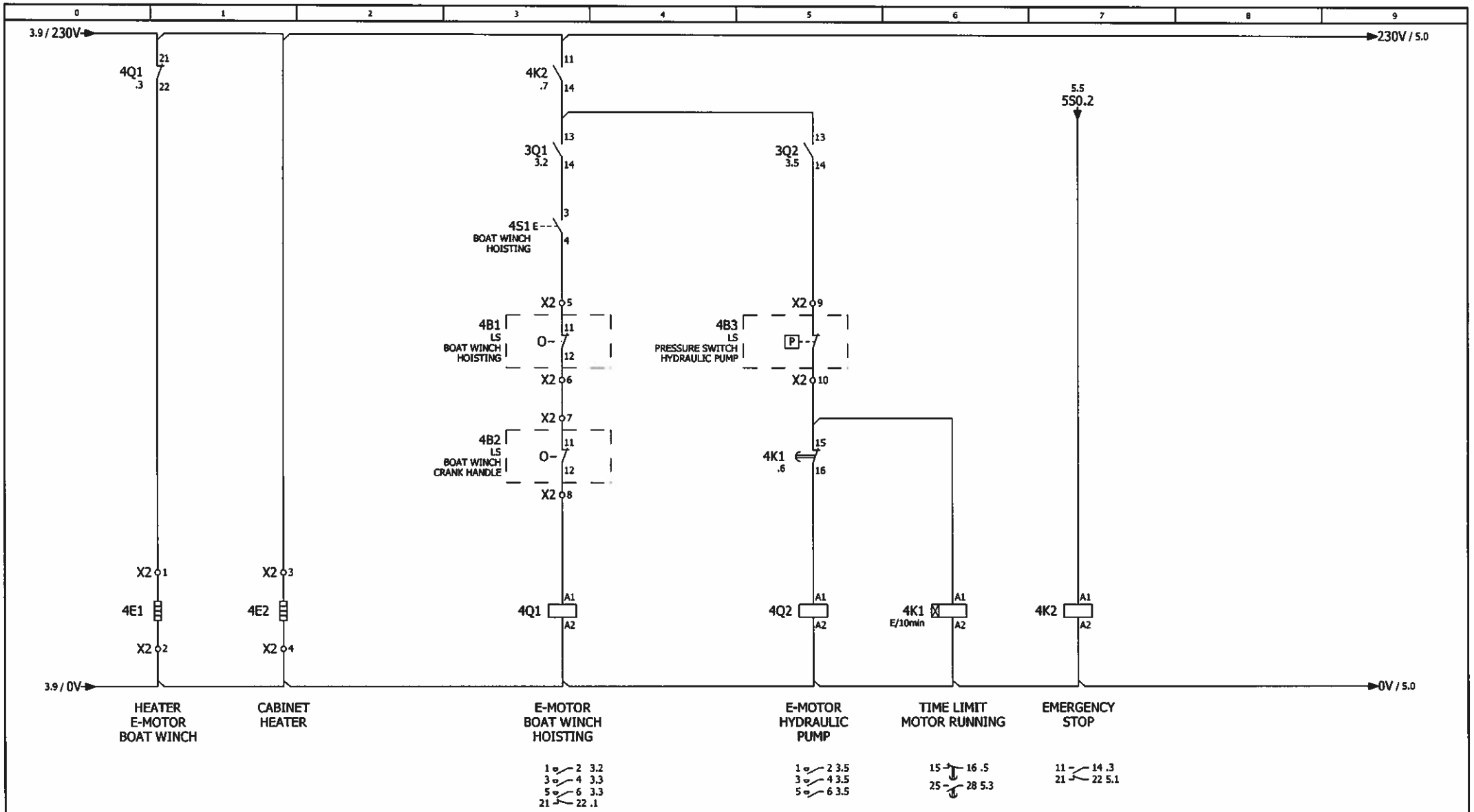

			Date	08.04.2011	Rescue boat / Liferaft crane	Global Davit GmbH	HEATERS, EMERGENCY STOP CONTROLLER BOAT WINCH & HYDRAULIC	07GD113a-T01	=
			Arranged	Matthias					+
			Checked						Sheet 4
Modification	Date	Name							last Sheet 6

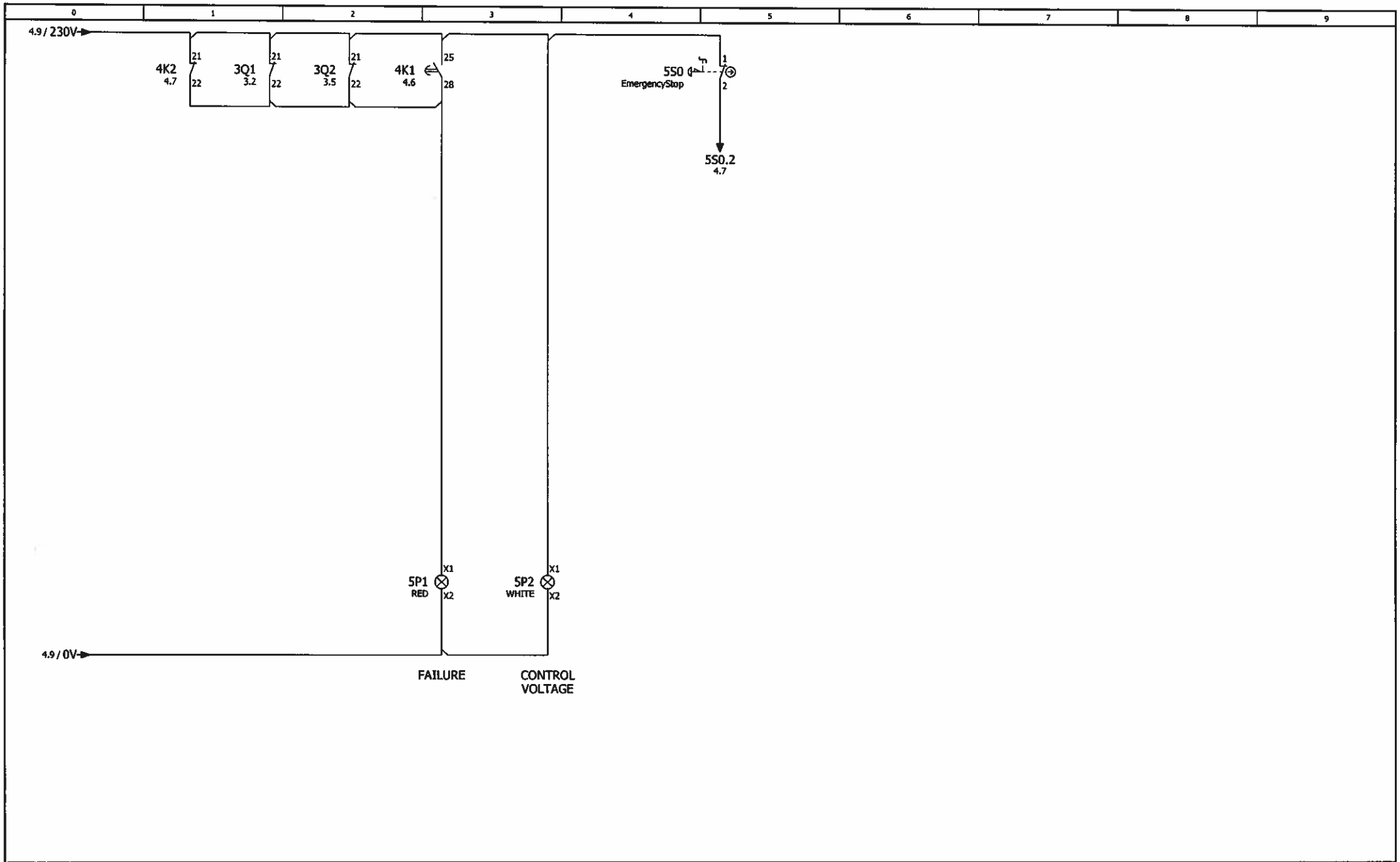

			Date	18.08.2010	Rescue boat / Liferaft crane	Global Davit GmbH	SIGNAL LAMPS	07GD113a-T01	=
			Arranged	matthias					+
			Checked						Sheet 5
Modification	Date	Name							last Sheet 6

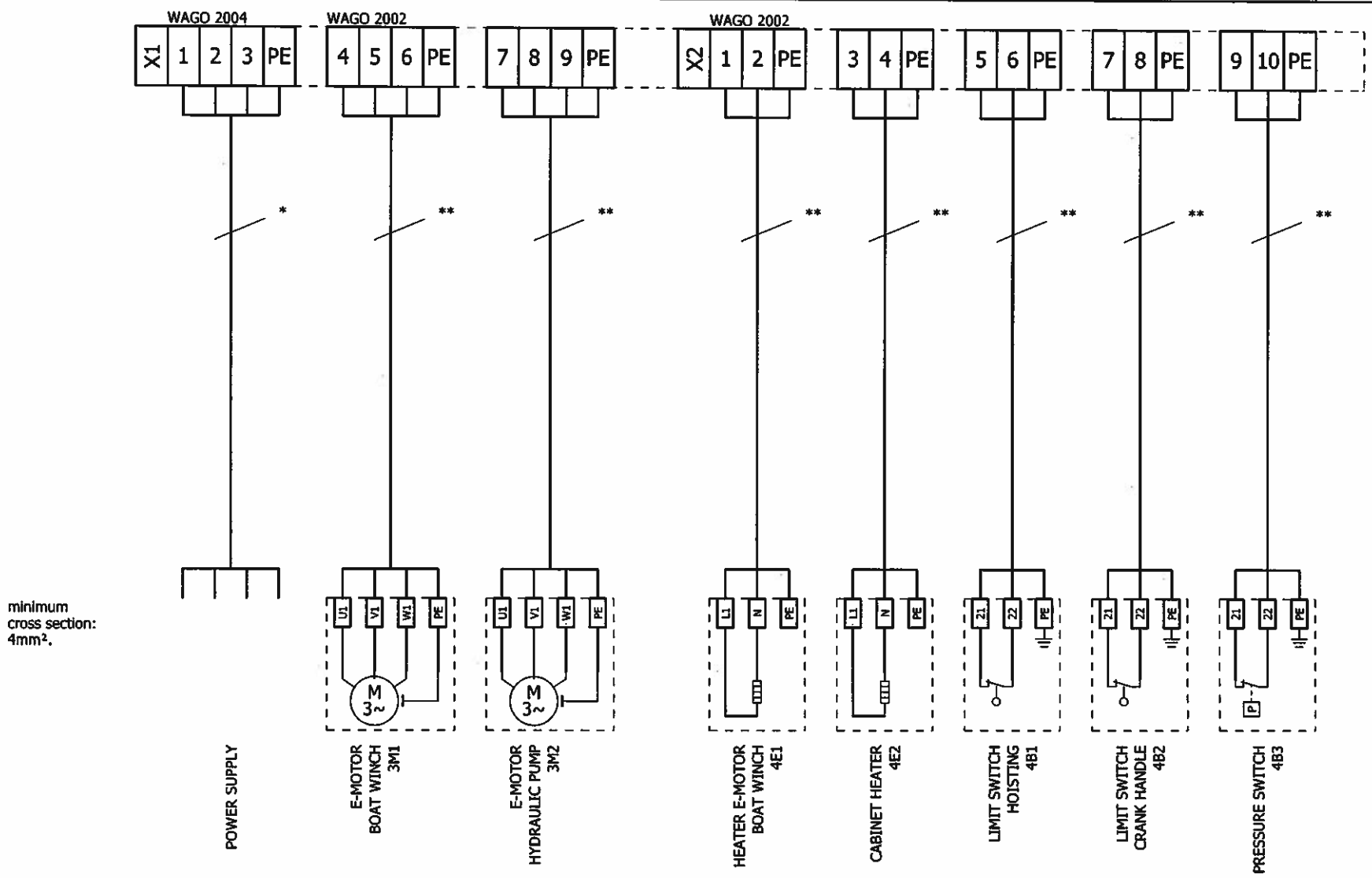

X1: Cabinet 400V
X2: Cabinet 230V

* by yard
** by maker

			Date	18.08.2010	Rescue boat / Liferaft crane	Global Davit GmbH	CONTROL PANEL TERMINAL STRIP X1 / X2	07GD113a-T01
			Arranged	matthias				
			Checked					
Modification	Date	Name						

Sheet 6
last Sheet 6

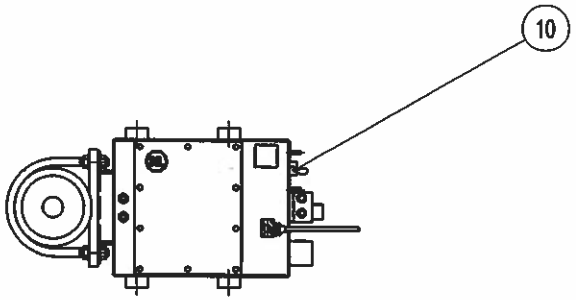

Vsp=13/20/25/35/50 ltr (see general arrangement)
p0= (see general arrangement)
Pressure switch (5) maintains
the pressure in the accumulator between:
-p min. = 90% of p max.
-p max. = (see general arrangement)
Pressure relief valve (4) opens at:
-p relief= 110% of p max.
Veff=90l

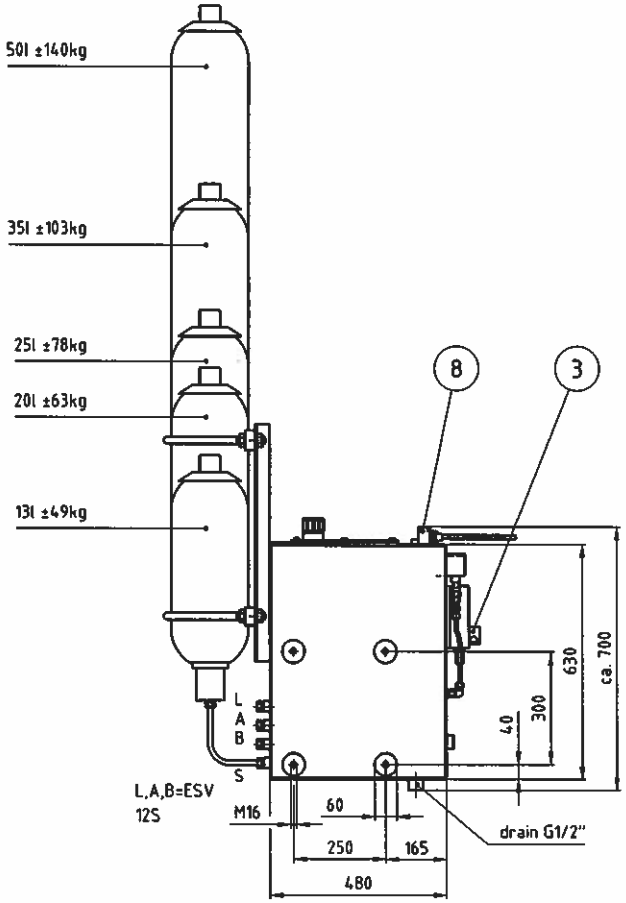

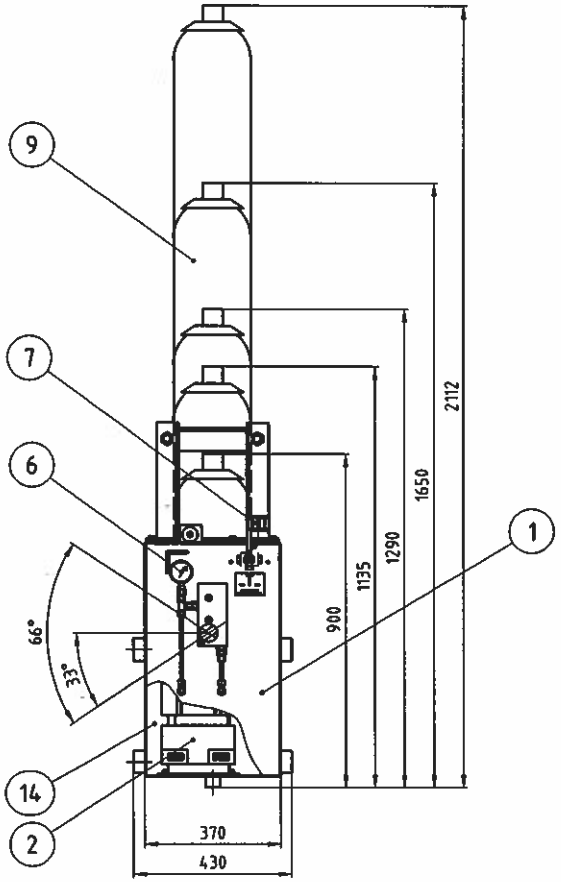

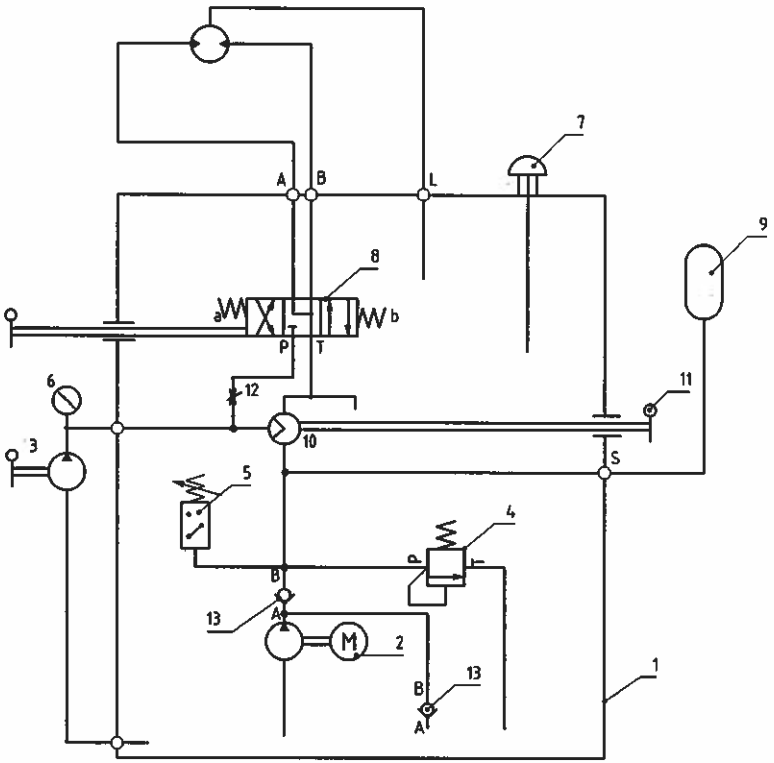

Vsp	Standard	with ASME-code
13l	-	-
20l	0007556	0008013
25l	0007520	0010155
35l	0007555	0008042
50l	0007503	0007800

ITEM	QUANT	DESCRIPTION	MATERIAL	REMARKS	MASS P	MASS S
					105	59
15	1	Hose kit	0001800			
14	1	Hydraulic oil 90l	yard supply		81	
13	1	Non-return valve	0002643			
12	1	Throttle valve	0001224			
11	1	Lever for cock valve	included			
10	1	3-way cock valve	0000522		1	
9	1	Accumulator	see table			
8	1	4/3 directional control valve	0000523		1	
7	1	Filler breather	0001216			
6	1	Manometer	0002033		1	
5	1	Pressure switch	0000887			
4	1	Pressure relief valve	0001194			
3	1	Hand pump	0001214		5	
2	1	Oil immersed power unit, 300 bar	0001956	radial piston	15	
1	1	Arrangement hydraulic tank 90l	4-2171		1	59

D	01-07-09	Sign & panel, as-built drawings, HSL, accumulator 13/20, steel, type-test, diagram corrected	DN	HS
C	26-01-08	description	date	name

Copyright MDO b.v. All rights reserved

Maritime Design Office

PROJECTION

Arrangement hydraulic unit / diagram

HSP.05/10.05

SCALE	DATE	NAME	CHECKED
1:10	01-06-2006	FdJ	

REPLACING
COPY OF 2-1648A

2-1672

Unterölmotoren Standardprogramm
Technische Daten

	Artikel nr.	Polzahl	Nennleistung KW	Upm U/min	Ampere 230V	Ampere 400V	Anzugs- zu Nennmoment M_A/M_N	Betriebsart	Bemaßung A	Bemaßung B
Drehstrommotoren	624	6	0.55	920	3.6	2.1	1.8	S3-30%	168	141
	425	4	0.75	1400	4.1	2.4	2.8	S3-30%	163	141
	426	4	1.10	1400	4.6	2.7	2.3	S3-30%	168	141
	427	4	1.50	1400	5.25	3.04	2.3	S3-30%	183	141
	428	4	2.20	1380	9.6	5.6	2.1	S3-30%	198	141
	429	4	3.00	1380	12.8	7.4	2.0	S3-30%	218	141
	430	4	4.00	1390	17	9.8	1.8	S3-30%	243	141
	431	4	5.20	1380	22.2	12.8	1.8	S3-30%	268	141
Wechselstrommotor	624	4	0.75	1400	6		0.85	S3-30%	183	141
	624	4	1.10	1380	11		0.78	S3-30%	198	141
	624	4	1.5	1400	12		0.80	S3-30%	218	141

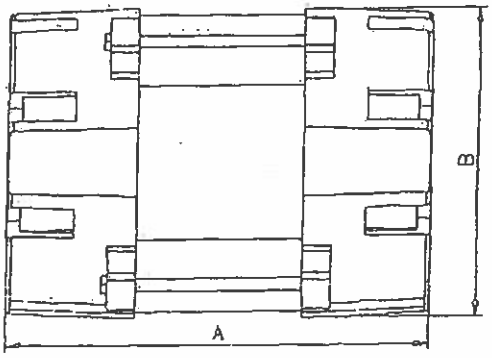

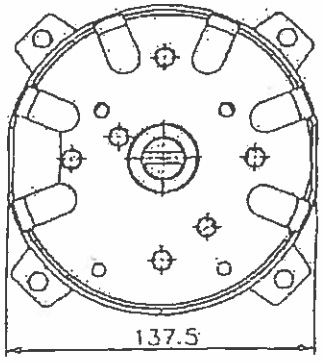

Allgemeine Daten

Drehstrom Asynchronmotor 230V – 400V 50 Hz
Wechselstrom Asynchronmotor 230V 50 Hz
Isolierung Klasse H.
Schutzart Motor IP10.
Spannungstoleranz ±5%

1.1 Construction

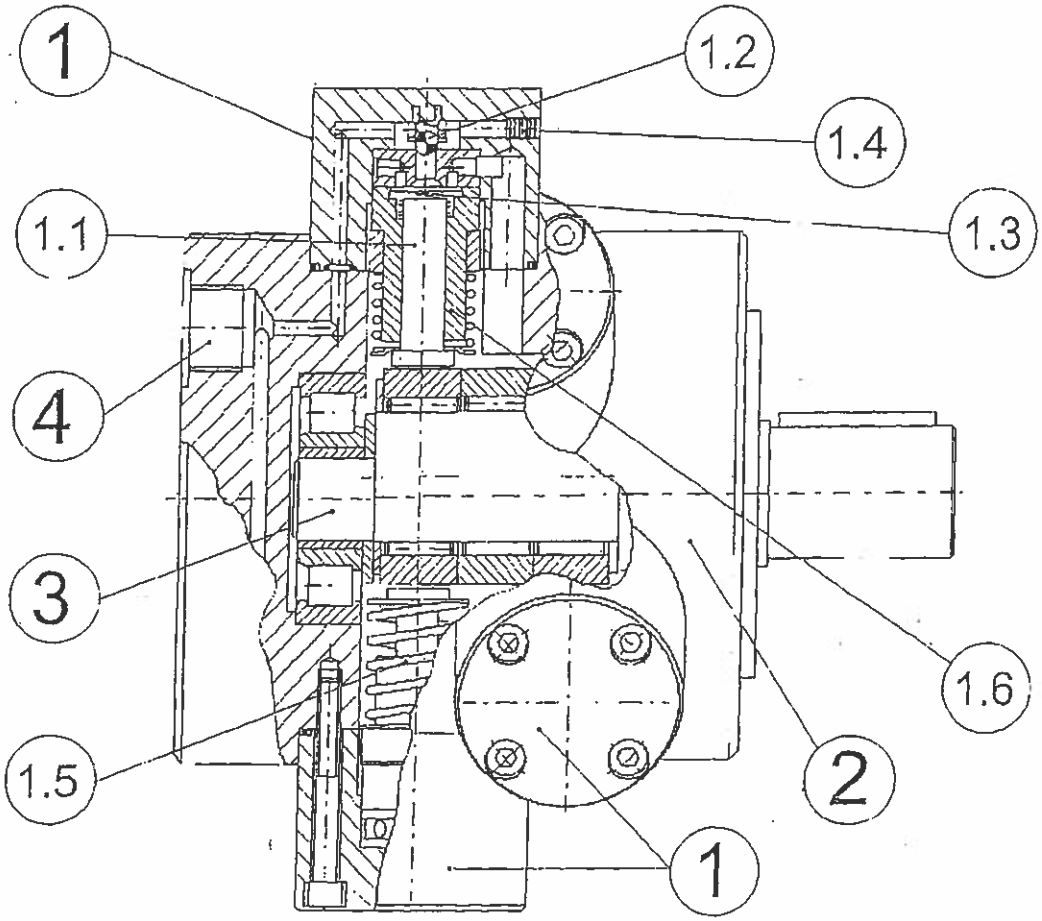

Schematic sectional view through a 6 cylinder pump (design PM/06)

① Pump elements (outside admission and can be replaced by loosening the 4 hexagon socket head screws)
- 1.1 piston
- 1.2 pressure valve
- 1.3 upstroke valve
- 1.4 sealing stopper
- 1.5 readjustment spring
- 1.6 piston bushing

② Housing

③ Eccentric shaft with rolling bearings for casing types P and PM, otherwise sliding bearings

④ Pressure connection

Kraus & Wimmer
Maschinen- u. Anlagenbau GmbH & Co. KG
Bahnhofstraße 20, Sulzbach a. Inn
94099 Ruhstorf a. d. Rott
Germany
Phone: +49 (0) 8503 / 9147-30
Fax: +49 (0) 8503 / 9147-77
Internet: www.kraus-hydraulics.com
e-mail: office@kraus-hydraulics.com

1.2 Operating data

Construction type:	Radial piston pump with constant output
Type designation:	See type identification chapter 2.2
Attachment:	At the front side with bellhousing
Drive:	Via elastic coupling; direction of rotation as required (for HP/LP - combination pumps it must be the same as the direction of rotation of the gear pump)
Speed range:	100 - 2900 min^{-1} (higher speeds upon request)
Operating pressure:	up to 1000 bar; see overview chapter 2.1
Output:	0.3 - 48.1 l/min; see overview chapter 2.1 Calculation: output Q [l/min] = $V_g * n * \eta_{Vol}$ V_g: piston displacement [cm^3/rev.] n: rotational speed [min^{-1}] η_{Vol}: volumetric efficiency ≈ 0.98
Assembling position:	any, equipment dimensions see chapter 6
Suction height:	All pumps are self-priming (up to 500 mm, depending piston type). During operation, the level of oil can be lowered to 1000 mm (depending pump type).
Oils to be used:	Hydraulic oils with a kinematic viscosity [cSt] of 10 - 220 mm^2/s (HP/LP – combination pumps of 20 - 200 mm^2/s); in addition biologically reducible hydraulic oils, virtually non-flammable hydraulic liquids and diesel fuel can be pumped (further information upon request).
Temperature range:	Oil and surroundings -40° / +80°C
Energy requirements:	Calculation: $P_{kW} = \frac{p * Q_{th} * k}{612 * \eta}$ p: operating pressure [bar] Q_{th}: output [l/min] k: factor, depends on the number of pistons $k \approx 2.9$ (1 piston), $k \approx 1.4$ (2 pistons), otherwise k=1 η: overall efficiency $\approx$ 0,8 ... 0,88

Kraus & Wimmer
Maschinen- u. Anlagenbau GmbH & Co. KG
Bahnhofstraße 20, Sulzbach a. Inn
94099 Ruhstorf a. d. Rott
Germany
Phone: +49 (0) 8503 / 9147-30
Fax: +49 (0) 8503 / 9147-77
Internet: www.kraus-hydraulics.com
e-mail: office@kraus-hydraulics.com

Design PZ/03

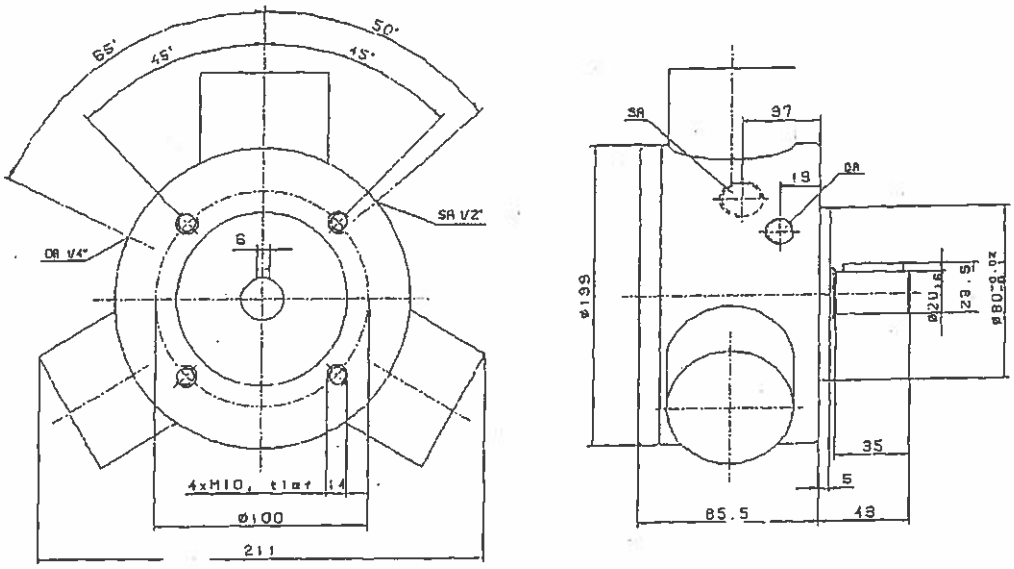

Design PZ/05

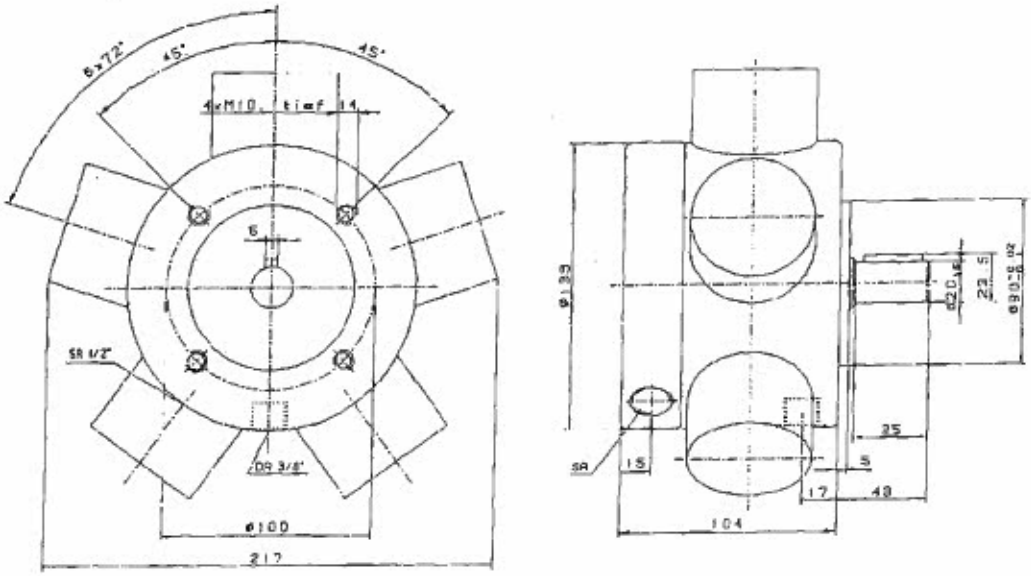

Kraus & Wimmer
Maschinen- u. Anlagenbau GmbH & Co. KG
Bahnhofstraße 20, Sulzbach a. Inn
94099 Ruhstorf a. d. Rott
Germany
Phone: +49 (0) 8503 / 9147-30
Fax: +49 (0) 8503 / 9147-77
Internet: www.kraus-hydraulics.com
e-mail: office@kraus-hydraulics.com

HAWE HYDRAULIK

Directly controlled pressure limiting and sequence valves type MV, SV etc.

Pressure valves gover the pressure within a hydraulic system.
The types below are intended for the following purposes:

- **Pressure limiting valve (safety valve):**
  Safeguarding the system against excessive pressure or for the limitation of working pressure.
- **Sequence valves:**
  Generates a constant pressure difference between inlet and outlet of the flow.

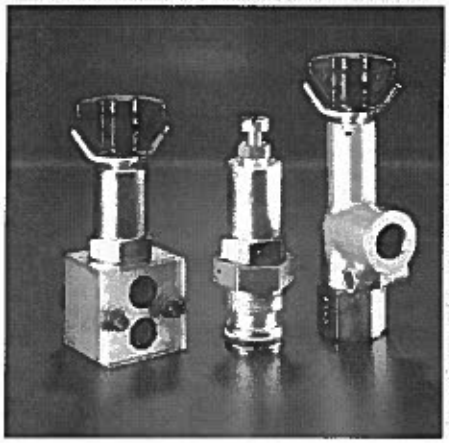

Directly controlled valves feature a dampening device to ensure quiet operation, but they are also available without it if necessary for an application. There is also a version of the pressure limiting valve (Type MV.X), conforming the Pressure Equipment Directive 97/23 EC, which features a type approval and a CE-stamping, usually necessary when used as safety valves for accumulators.

Nomenclature:	Pressure limiting valve, sequence valves (directly controlled)
Design:	Individual valve for pipe connection Screw-in valve Individual manifold mounting valve Assembly kit
Adjustability:	Tool adjustable Manually adjustable
p_{max}:	700 bar
Q_{max}:	5 ... 160 lpm

Basic types and general parameters

Basic type	**MV** [1) 5)]	**MVS** [1) 5)] **MVG** [3)]	**MVE** [5)]	**SV** [1)]	**MVP** [5)]	**DMV** [1)]	**MVCS** [2)] **MVGC** [3)]	**SVC** [1)]	**MVB** [1) 4)]
Symbol		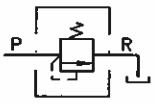			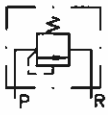	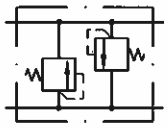		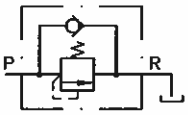	
Function	Pressure limiting valve	Pressure limiting valve and differential pressure regulators				Pressure limiting valve	Pressure limiting valve with free turn R → P via a by-pass check valve		Pressure limiting valve and differential pressure regulators
Brief description	Corner valve for pipe connection	Corner valve for pipe connection	Screw-in valve	Straight-way valve for straight pipe installation	Manifold mounting valve	Twin valve as shock valve for hydraulic motors	Corner valve for pipe connection	Straight-way valve for straight pipe installation	Assembly kit [4)]
$p_{perm\ R}$ (bar)	20	500	500	500	500	350	500	500	200

Size	13	14	4	5	6	8
Pressure range:	H: 700/5	N: 50/8	F: 80/20	F: 80/40	F: 80/75	E: 160/160
Pressure p_{max} (bar) /		M: 200/8	E: 160/20	E: 160/40	E: 160/75	C: 315/160
Flow Q_{max} (lpm)		H: 400/8	C: 315/20	C: 315/40	C: 315/75	
			B: 500/20	B: 500/40	B: 500/75	
			A: 700/12	A: 700/20	A: 700/40	
Tapped ports (BSPP) [6)]	G 1/4	G 1/4	G 1/4	G 3/8	G 1/2	G 3/4
			G 3/8	G 1/2	G 3/4	G 1

1) Only size 4, 5, 6, and 8
2) Only size 4, 5, and 6
3) Only size 13 and 14
4) For other types of assembly kits see also "Additional information"
5) Also version with type approval (TÜV) available (size 4, 5, and 6)
6) Version for pipe connection

Additional versions

- Multiple pressure limiting valves (2, 3, 4, 5 valves in parallel)
- Twin pressure limiting valves with suction valve
- Pressure limiting valves with type approval (TÜV)
- Actuation option of the piloting valve with ball head actuation e.g. for cam, lever or other curve controlled systems (only type MVG13(14) and MVP13(14))
- Adjustment via self-locking turn knob or turn knob with lock

Order examples

MVS 52 BR

Pressure limiting valve and sequence valve as corner valve for pipe connection, size 5, tapped ports G 3/8 (BSPP) (coding 2), pressure range up to 500 bar (coding B), pressure manually adjustable (coding R)

MVP 13 HR

Manifold mounting valve, size 13, pressure range H (20 ... 700 bar)

Dimensions (examples)

Type MV, MVS

(see order example)

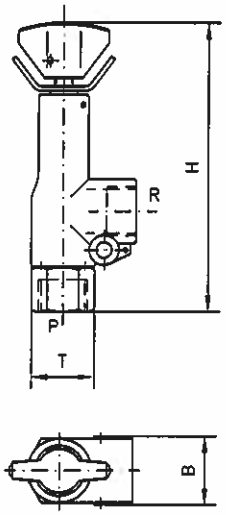

Type DMV

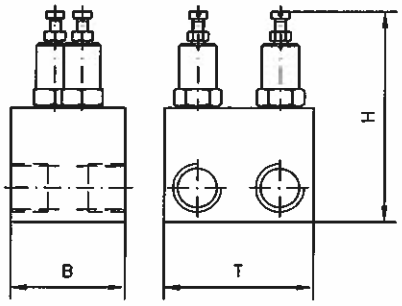

Type MVG

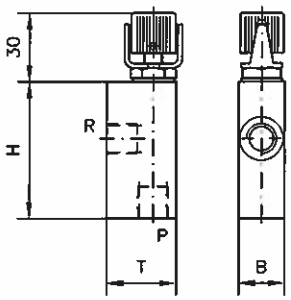

Type SV, SVC

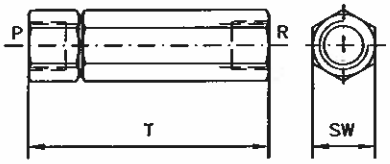

All dimensions in mm,
subject to change without notice!

Basic type	Size	H_{max}	B	T_{max}	m_{max} (kg)
MV,	4	126	24	48	0.3
MVS,	5	142	29	60	0.4
MVCS,	6	164	36	70	0.7
MVE	8	208	40	60	2.0
DMV	4	107	40	52	0.7
	5	123	50	65	1.3
	6	142.5	60	75	1.8
	8	192	80	96	4.5
MVP	4	102	28	35	0.3
	5	113	32	40	0.5
	6	133	35	50	0.8
	8	172	50	60	1.6

Basic type	Size	H_{max}	B/SW	T_{max}	m_{max} (kg)
	4	–	a/f 22	87	0.2
SV, SVC	5	–	a/f 27	108	0.4
	6	–	a/f 32	132	0.9
SV	8	–	a/f 41	157	0.9
MVP	13, 14	82	29	50	0.3
MVG(C)	13, 14	94	20	42	0.3
MVE	13, 14	75	a/f 27	–	0.1

Additional information

- Pressure limiting valves type MV etc. D 7000/1
- Miniature pressure limiting valves D 3726
- Pressure limiting valves (assembly kits) D 7000 E/1
- Multiple pressure limiting valves type MV. D 7000 M
- Pressure limiting valves with type approval (TÜV) type MVX etc. D 7000 TÜV
- Screw-in pressure valves type CMV, CSV D 7710 MV
- Piloted pressure valves type DV D 4350
  type A D 6170
- See also section "Devices for special applications" (Devices for up to 700 bar)

For page and section of the devices additionally listed, see type index

HAWE HYDRAULIK

Pressure switches type DG

Electro-hydraulic pressure switches are devices, which, when set under pressure close or open electrical contacts. They are widely used in applications where it is intended that, once a pre-set pressure is achieved and exceeded, an electrical switching command or signal should be triggered for further working cycles.
Many different versions (with pressure setting on a dial, with main and secondary switch, screw-on pressure switches) enable their use in many applications.
There is a design related difference of 8 ... 20 % between the upper switching point and the lower switching point. Only the electronic pressure switch type DG 5 E gives provision to select two independant switch points and to set the hysteresis.

Type DT is an analogous pressure sensor.

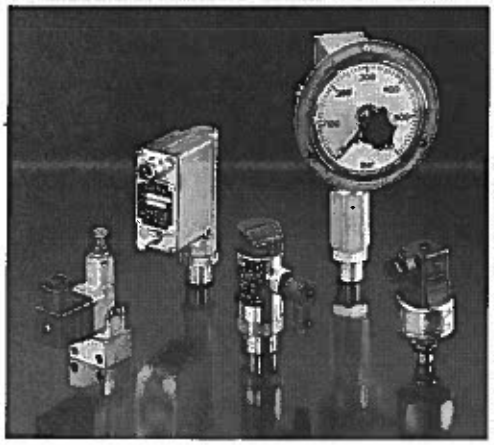

Nomenclature:	Spring loaded pressure switch (piston type)
Design:	Manifold mounting version Screw-in version Version for pipe connection
p_{max}:	4 ... 700 bar
p_{max}:	0 ... 1000 bar

Basic types and general parameters

Basic type and size	Brief description	Adjustable pressure p_{max} (bar) [1]	Connection thread (BSPP)	Symbol
DG 1R	Adjustment via turn-knob at the dial	20 ... 600	G 1/2 or G 1/4 A	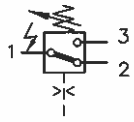
DG 8	Version with two pressure switches Main switch: Adjustment via turn-knob at the dial Secondary switch: Adjustment via set screw	20 ... 600 and 20 ... 180	G 1/2 or G 1/4 A	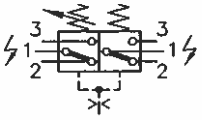
DG 33	Compact design for manifold mounting Adjustment via set screw	200 ... 700	G 1/4 or G 1/4 A [2]	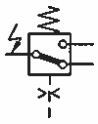
DG 34		100 ... 400		
DG 35		20 ... 250		
DG 365		12 ... 170		
DG 364		4 ... 50		
DG 36		4 ... 12		
DG 5 E	Electronic pressure switch with two switch points	0 ... 100 0 ... 250 0 ... 400 0 ... 600	G 1/4	
DT 1	Analogous pressure sensor	0 ... 1000	G 1/4 A	
DT 2		0 ... 600		

[1] The max. operation pressure of 700 bar is not influenced by the max. set pressure
[2] For versions with adapter only

4

Additional versions

- Pressure switches with bezel for switch board installation (DG 1)
- Pressure switches with various connection threads or connection pipe (DG 3.)
- Lockable adjustment knob (see also section "Further information")
- Supply voltage 12V DC, 24V DC, 230V AC 50/60 Hz
- Combination with various fittings (see also section "Further information")

Order examples

DG 1 R
Pressure switch type DG 1,
pressure range 40...160 bar

DG 35
Pressure switch type DG 3 including plug,
pressure range 20...210 bar

Dimensions

Type DG 1 R
(see order examples)

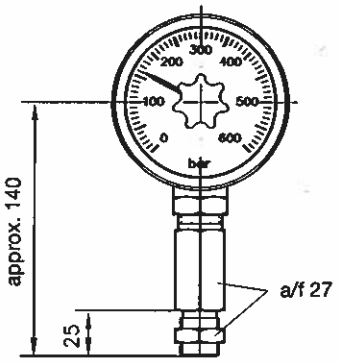

Type DG 8

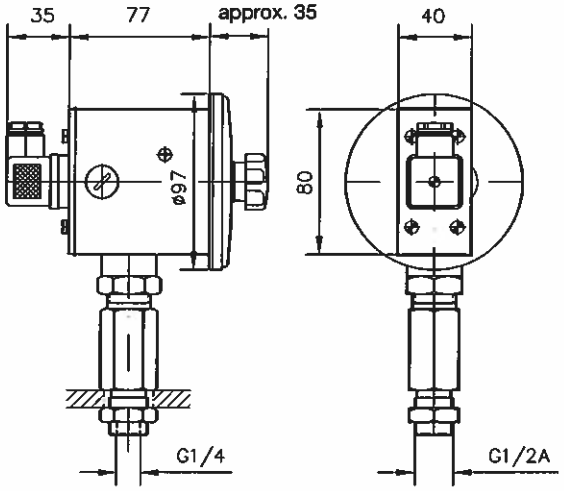

Type DG 3 .. (see order examples)

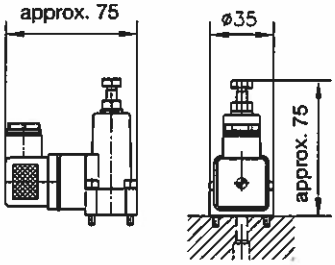

G = BSPP

Type DG 5E

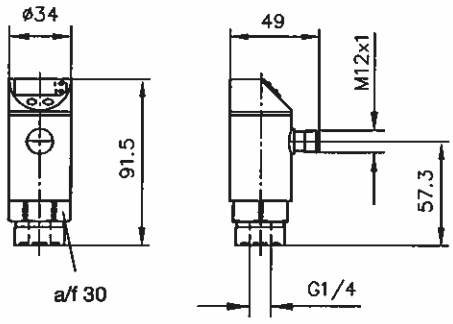

Type DT1

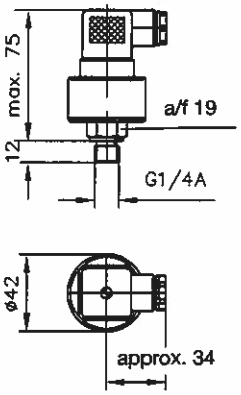

Type DT 2

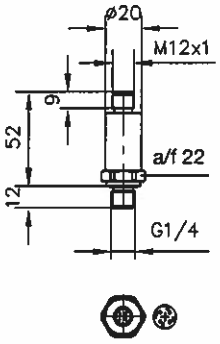

Basic type	m (kg)
DG 1 R	1.3
DG 8	1.35
DG 3..	0.3
DG 5 E	0.25
DT 1	0.15
DT 2	0.70

All dimensions in mm, subject to change without notice!

Further information

• Pressure switches type DG	D 5440
• Fittings type X	D 7065
type X84	D 7077
• Electronic pressure switch type DG 5E	D 5440 E/1
• Analogous pressure sensor type DT 1	D 5440 T
type DT 2	D 5440 T/1

- See also section "Devices for special applications" (Hydraulics for clamping purposes, Press controls, Devices for up to 700 bar)

For page and section of the devices additionally listed, see type index

COMPACT CATALOGUE

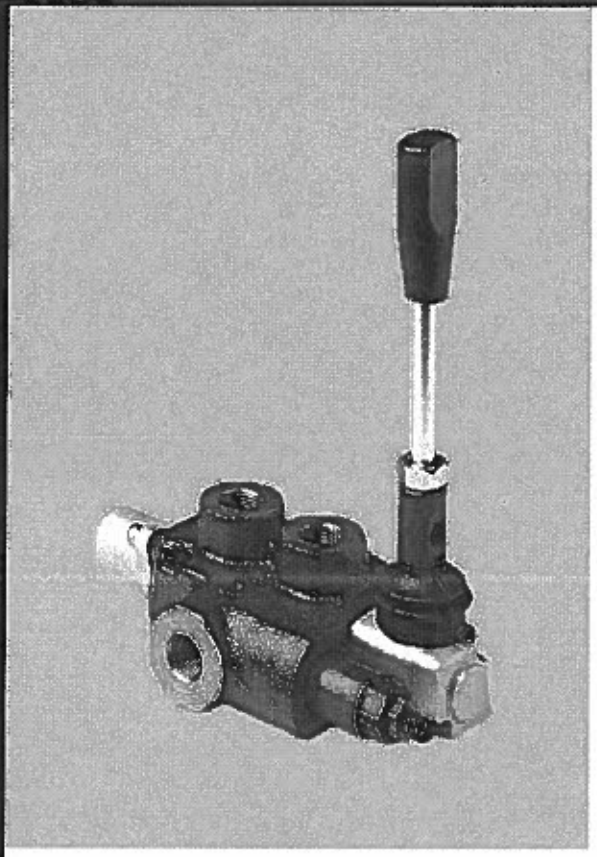

SD4

MONOBLOCK
DIRECTIONAL CONTROL VALVES

walvoil
HYDRAULIC CONTROL SYSTEMS

SD4

Features

Simple, compact designed, this valve is only one section for open centre and closed centre hydraulic systems.

- Fitted with a main pressure relief valve.
- Diameter 16 mm - *0.63 in* interchangeable spools.
- Available manual and remote with flexible cables spool control kits.

Working conditions

This catalogue shows technical specifications and diagrams measured with mineral oil of 46 mm^2/s - *46 cSt* viscosity at 40°C temperature.

Nominal flow rating		45 l/min	
Operating pressure (maximum)		250 bar	*3600 psi*
Back pressure (maximum)	*on outlet port T*	25 bar	*260 psi*
Internal leakage A(B)→T	*Δp=100 bar - 1450 psi* *fluid and valve at 40°C - 104°F*	3 cm^3/min	*0.18 in^3/min*
Fluid		Mineral base oil	
Fluid temperature	*with NBR (BUNA-N) seals*	from -20° to 80°C	
	with FPM (VITON) seals	from -20° to 100°C	
Viscosity	*operating range*	from 15 to 75 mm^2/s	*from 15 to 75 cSt*
	min.	12 mm^2/s	*12 cSt*
	max.	400 mm^2/s	*400 cSt*
Max level of contamination		19/16 - ISO 4406	
Ambient temperature		from -40° to 60°C	

NOTE - *For different conditions please contact Customer Service.*

Additional information

This catalogue shows the product in the most standard configurations. Please contact Customer Service Dpt. for more detailed information or special request.

WARNING!

All specifications of this catalogue refer to the standard product at this date. Walvoil, oriented to a continuous improvement, reserves the right to discontinue, modify or revise the specifications, without notice.

WALVOIL IS NOT RESPONSIBLE FOR ANY DAMAGE CAUSED BY AN INCORRECT USE OF THE PRODUCT.

7th edition October 2000:
This edition supercedes all prior documents.

Dimensional data

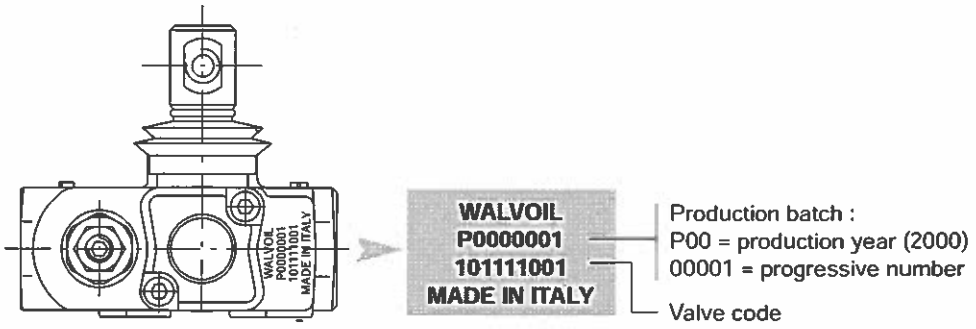

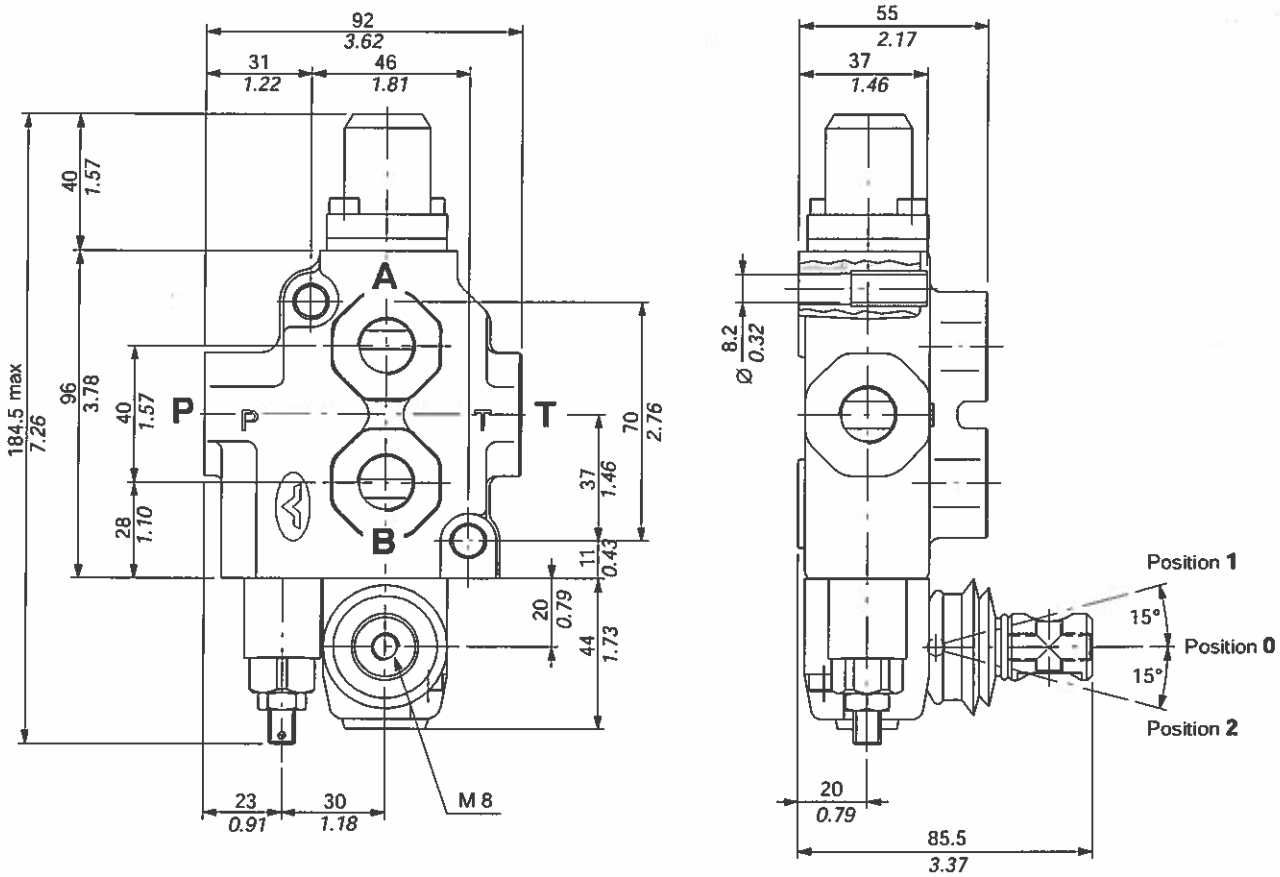

Standard threads

PORT	BSP (ISO 228/1)	UN-UNF (ISO 11926-1)	METRIC (ISO 262)
Inlet **P**	G 3/8	3/4-16 UNF-2B (SAE 8)	M18x1.5
A and **B** ports		9/16-18 UNF-2B (SAE 6)	
Outlet **T**		3/4-16 UNF-2B (SAE 8)	

Ordering codes

Example:

SD4 / 1 (KG3-120) / 1CP 8 L *

1. 2. 3. 4. 5.

Pressure relief valve setting in bar

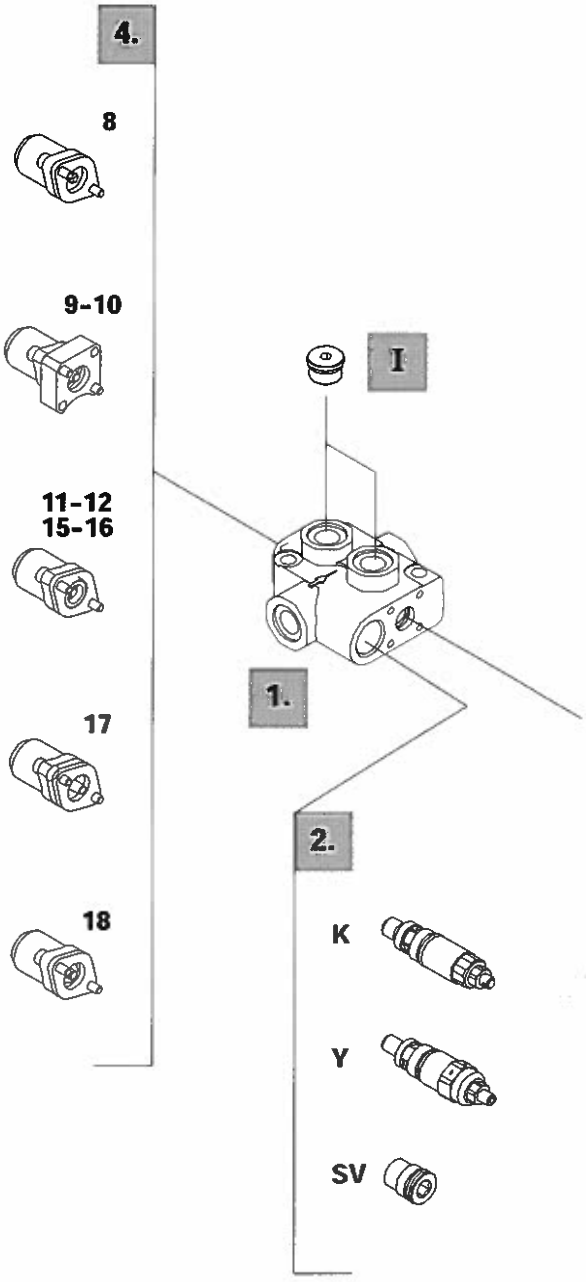

1. Body kits *

TYPE	CODE	DESCRIPTION
1	5KC1113000	1 section

Include boby and seals.

2. Inlet relief options

TYPE	CODE	DESCRIPTION
VMD5/1 direct pressure relief valve type K (standard)		
(KG2-80)	5KIT105122	Range 40 to 80 bar / *580 to 1150 psi* standard setting 80 bar / *1150 psi*
(KG3-120)	5KIT105123	Range 63 to 200 bar / *900 to 2900 psi* standard setting 120 bar / *1750 psi*
(KG4-220)	5KIT105124	Range 160 to 250 bar / *2300 to 3600 psi* standard setting 220 bar / *3200 psi*
VMD5/1 direct pressure relief valve type Y		
(YG2-80)	5KIT105212	Range 63 to 160 bar / *900 to 2300 psi* standard setting 80 bar / *1150 psi*
(YG3-175)	5KIT105213	Range 125 to 250 bar / *1800 to 3600 psi* standard setting 175 bar / *2500 psi*

Standard setting is referred to 10 l/min flow.

SV	XTAP623282	Relief blanking plug

3. Spool options

TYPE	CODE	CIRCUIT DESCRIPTION
1CP	3CU1110110	Double acting with positive overlap, 3 positions, A and B closed in neutral position
1N	3CU1110120	Double acting, 3 positions, A and B closed in neutral position, negative overlap
2	3CU1125130	Double acting, 3 positions, with A open to tank in neutral position
3	3CU1131130	Single acting on A, 3 positions, B plugged; requires G3/8 plug (see part I)
4	3CU1135140	Single acting on B, 3 positions, A plugged requires G3/8 plug (see part I)
6	3CU1150130	Double acting, 3 positions, closed center
7	3CU1155130	Double acting, 3 positions, closed center with A and B to tank in neutral position

NOTE (*) - *Items are referred to **BSP** thread.*

HAWE HYDRAULIK

Hand pumps type H, HE, HD, and DH

The hand pumps type H are available in single acting and double acting versions. The single acting design pumps in one lever direction only, the reverse motion performs the suction stroke.
The double acting design pumps and intakes simultaneously in both lever directions. In one particular design, the suction side may be charged with up to 150 bar.
The lever mechanism may be protected from harsh environments if desired, and may incorporate a drain valve (connecting P → S), a pressure limiting valve or a tank. These additional options enable the use of this pump in a wide array of application.

Nomenclature:	Piston pump
Design:	Single acting hand pump Double acting hand pump
p_{max}:	80 ... 600 bar
V_{max}:	4 ... 78 cm³/stroke

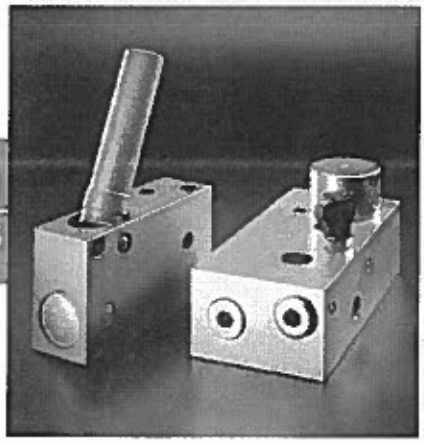

1
5

Basic types and general parameters

Basic type and size	Pressure p_{max} (bar)	Geom. volume per stroke $V_{H\,max}$ cm³/stroke	Tapped ports [1] P	Tapped ports [1] S
H 16	350	6		
H 20	220	9.4	G 1/4	G 1/4
H 25	150	14.7		
HE 4	600	4		
HD 13	350	13	G 1/4	G 1/4
HD 20	220	20		
HD 30	150	30		
DH 40	150	51	G 3/8	G 3/8
DH 45	140	64		

Symbol

Design with pressure limiting valve and drain valve

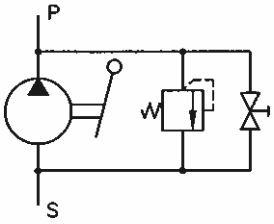

[1] BSPP-ports

Additional versions
- Hand pumps with pressure limiting valve and/or drain valve
- Hand pumps with tank (V_{max} = 0.5 l)
- Manifold mounting version

Order examples

H 25

Hand pump type H, size 25

HE 4

Hand pump type HE, size 4

DH 40

Hand pump type DH, size 40

Dimensions

Type H..

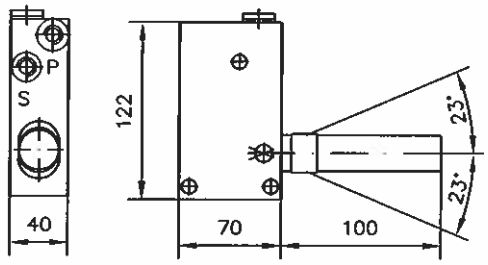

Type DH..

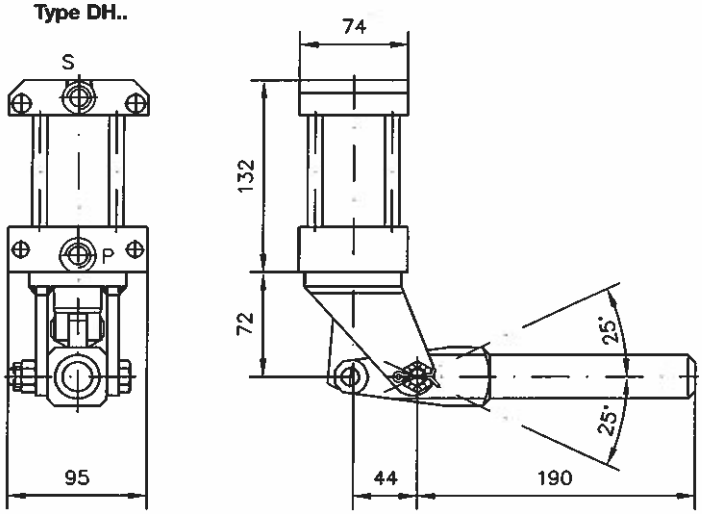

Type HE.. and HD..

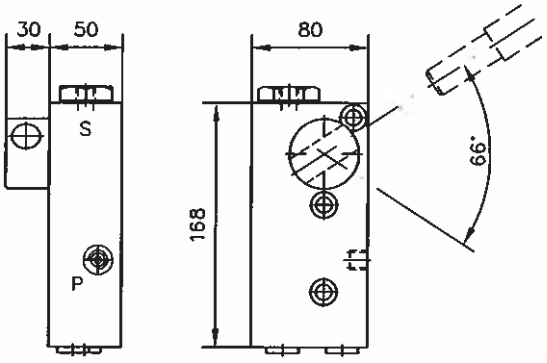

Basic type	P [2]	S [2]	m (kg)
H..	G 1/4	G 1/4	3.1
HE.. and HD..	G 1/4	G 1/4 and G 3/8	4.8
DH..	G 3/8	G 3/8	6.2 ... 6.6

All dimensions in mm, subject to change without notice!

[2] BSPP-ports

Additional information

- Hand pumps type H D 7147/1
- see also section "Devices for special applications" (Devices for up to 700 bar)

HYDAC INTERNATIONAL

Bladder Accumulators

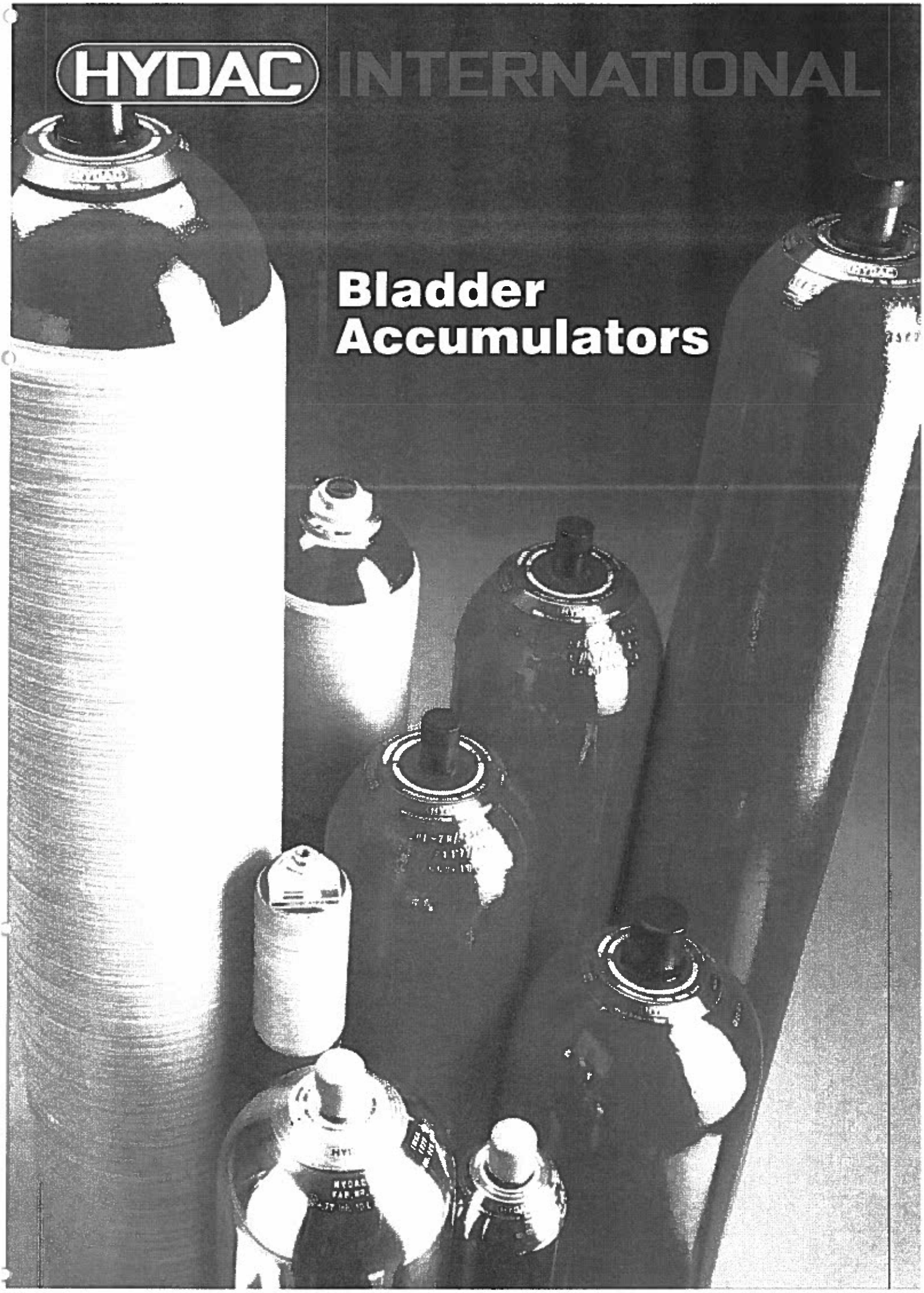

1. DESCRIPTION

1.1. FUNCTION

Fluids are practically incompressible and cannot therefore store pressure energy.

The compressibility of a gas (nitrogen) is utilised in hydro-pneumatic accumulators for storing fluids. HYDAC bladder accumulators are based on this principle, using nitrogen as the compressible medium.

The bladder accumulator consists of a fluid section and a gas section with the bladder acting as a gas-proof screen. The fluid around the bladder is connected with the hydraulic circuit, so that the bladder accumulator draws in fluid when pressure increases and the gas is compressed. When the pressure drops, the compressed gas expands and forces the stored fluid into the circuit.

1.2. CONSTRUCTION

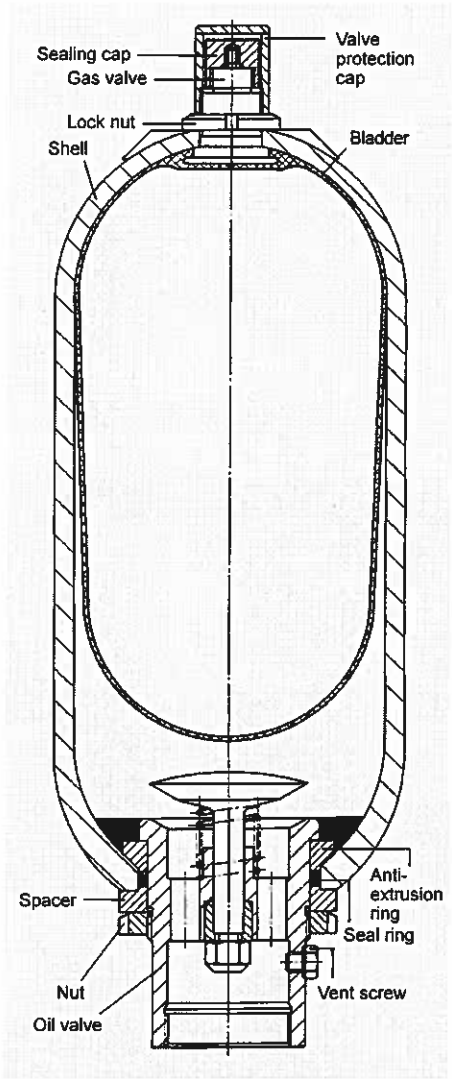

1.2.1 **Construction**
HYDAC bladder accumulators consist of a welded or forged pressure vessel, an accumulator bladder and valves for gas and oil inlet. The gas and oil sides are separated by the bladder.

1.2.2 **Bladder materials**
The following elastomers are available as standard:

- NBR (acrylonitrile butadiene rubber, Perbunan),
- IIR (butyl rubber),
- FKM (fluoro rubber, Viton®),
- ECO (ethylene oxide epichlorohydrin rubber).

The material used depends on the respective operating medium and temperature.

1.2.3 **Corrosion protection**
For use with chemically aggressive media the accumulator shell can be supplied with corrosion protection, such as plastic coating on the inside or chemical nickel plating. If this is insufficient, then nearly all types can also be supplied in stainless steel.

1.3. MOUNTING POSITION

HYDAC bladder accumulators can be installed vertically, horizontally and at a slant.
When installing vertically or at a slant, the oil valve must be at the bottom. On certain applications listed below, particular positions are preferable:

- energy storage: vertical
- pulsation damping: any position from horizontal to vertical
- maintaining constant pressure: any position from horizontal to vertical
- volume compensation: vertical

If the mounting position is horizontal or at a slant the effective volume and the maximum permissible fluid flow rate are reduced.

1.4. TYPE OF MOUNTING

- By using an appropriate adaptor, HYDAC accumulators, up to size 1 l, can be mounted directly inline
- For strong vibrations and volumes above 1 l, we recommend the use of our accumulator supports or accumulator mounting set. (Brochure "Supports for Hydraulic Accumulators" no. 3.502.)

5. TECHNICAL SPECIFICATIONS

5.1. MODEL CODE

(also order example)

SB 330 H - 32 A 1 / 112 B - 280 A

Series

Type
H = High Flow
A = shock absorber
P = pulsation damper
S = suction flow stabiliser
B = bladder top-repairable
Combinations possible: e.g. HB – High Flow with a top-repairable bladder or PH pulsation damper with high flow rate.
No details = standard

Nominal volume in l

Fluid connection
A = standard connection, thread with internal seal face
F = flange connection
C = valve mounting with screws on underside
E = sealing surfaces on the front interface (e.g. on thread M50 x 1.5)
G = male thread
S = special connection according to customer specification

Gas side
1 = standard model
2 = back-up model
3 = gas valve 7/8-14UNF with M8 female thread
4 = 5/8" gas valve
5 = gas valve M50 x 1.5 in accumulators smaller than 50 l
6 = 7/8-14UNF gas valve
7 = M28 x 1.5 gas valve
8 = M16 x 1.5 gas valve
9 = special gas valve according to customer specification

Material code [1]
112 = standard for mineral oil
depending on operating medium
others on request

Fluid connection
1 = carbon steel
2 = stainless steel 1.4021
3 = stainless steel (Niro) [3]
6 = low temperature steel

Accumulator shell
0 = elastomer (coated internally)
1 = carbon steel
2 = chemically nickel plated (internally)
4 = stainless steel (Niro) [3]
6 = low temperature steel

Accumulator bladder [2]
2 = NBR
3 = ECO
4 = IIR (Butyl)
5 = TT-NBR (low temperature)
6 = FPM
7 = others

User country
A = Federal Republic of Germany
For other countries see table page 8

Permissible operating pressure (bar)

Connection
Thread, codes for fluid connections: A, C, E, G
A = thread to ISO 228 (BSP)
B = thread to DIN 13 or ISO 965/1 (metric)
C = thread to ANSI B1.1 (UN..-2B seal to SAE J 514)
D = thread to ANSI B1.20.1 (NPT)
S = special thread according to customer specification

Flange, codes for fluid connection: F
A = DIN flange
B = flange ANSI B 16.5
C = SAE flange 3000 psi
D = SAE flange 6000 psi
S = special flange according to customer specification

Required gas pre-charge pressure must be stated separately!

1) Not all combinations are possible.
2) When ordering spare bladders, please state bladder connection port size.
3) Depending on type and pressure rating.

5.2. GENERAL

5.2.1 **Working pressure**
see tables
In some countries this can differ from the nominal pressure.

5.2.2 **Nominal volume**
see tables

5.2.3 **Effective gas volume**
see tables; based on nominal dimensions; this differs slightly from the nominal volume and is to be used when calculating the effective volume.

5.2.4 **Effective volume**
The fluid volume available between the working pressures p_2 and p_1.

5.2.5 **Max. pressure fluid flow rate**
In order to achieve the max. flow rate given in the tables, the accumulator must be mounted vertically. It has to be taken into account that a residual fluid volume of approx. 10% of the effective gas volume remains in the accumulator.

5.2.6 **Fluids**
Mineral oils, hydraulic oils, non-flam fluids, water, emulsions, fuels.
Other media on request.

5.2.7 **Gas charging**
Do not use oxygen when charging bladder accumulators (risk of explosion): nitrogen only.
Before dispatch all bladder accumulators are supplied with a protective pre-charge.

Higher pressures are possible on request.

5.2.8 **Permissible operating temperature**
-10 °C to +80 °C
(263 to 353 K)
Others on request.

5.2.9 **Permissible pressure ratio**
Ratio of max. working pressure p_2 to gas pre-charge pressure p_0 (see point 3.2.1).

6. HIGH PRESSURE ACCUMULATORS

6.1. STANDARD BLADDER ACCUMULATORS SB 330/400/500/550

6.1.1 Construction

HYDAC standard bladder accumulators consist of the pressure vessel, the flexible bladder with prevulcanised gas valve and the hydraulic connector with check valve. The pressure vessel is seamless and manufactured from high tensile steel according to the certification regulations. For chemically aggressive fluids the shell can be treated with various corrosion protectives, e.g. elastomer coating or chemical nickel plating, or can be manufactured in stainless steel. The bladder is available in the elastomers listed in point 5.1.

6.2. HIGH FLOW BLADDER ACCUMULATORS SB 330 H

6.2.1 Construction

HYDAC high flow bladder accumulators, type SB 330 H, are high performance accumulators with a feed flow of up to 30 l/s. The construction of these accumulators is the same as the standard bladder accumulators:

The fluid connection is enlarged to allow higher feed flows.
The same material combinations are available for the high flow pressure accumulators as for the standard models.

Dimensions

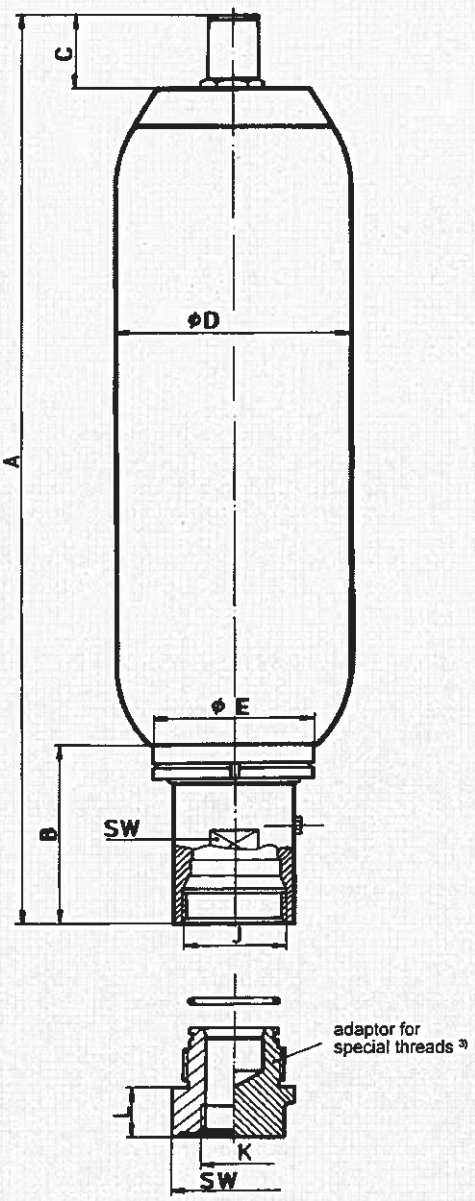

6.4. SPARE PARTS

SB 330/400/440/500/550
SB 330 H

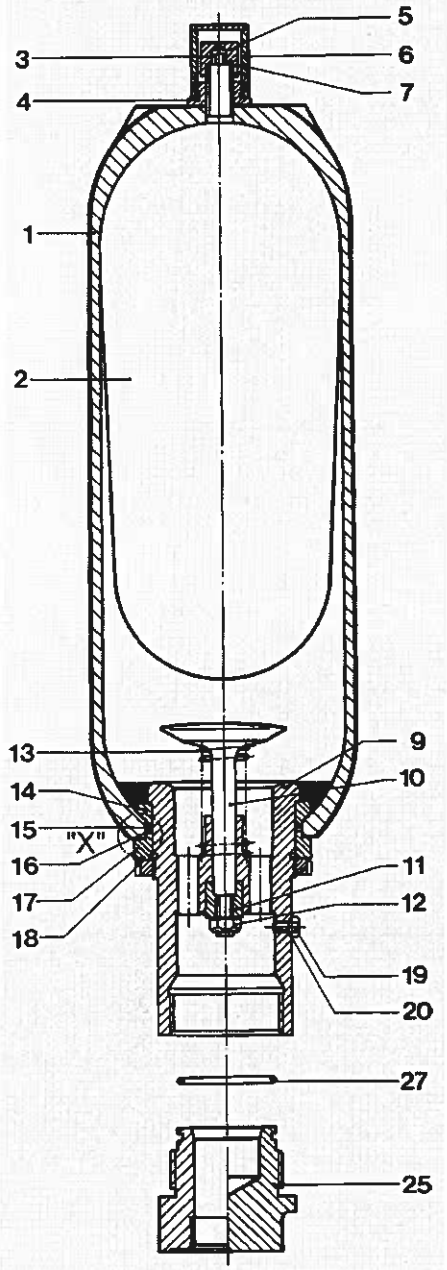

Detail "X"
SB 330/400 – 0.5 to 6 l

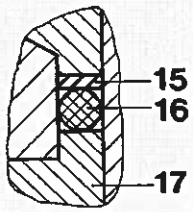

SB 330/400/500 – 10 to 50 l and
SB 330 H - 10 to 75 l
SB 550 - 1 to 5 l

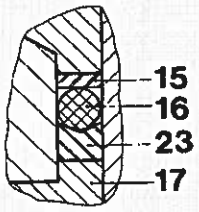

Description	Item
Anti-extrusion ring	14
Oil valve complete, consisting of:	
Oil valve body	9
Valve	10
Damping sleeve	11
Safety nut	12
Valve spring	13
Anti-extrusion ring	14
Washer	15
O-ring (see above)	16
Spacer	17
Lock nut	18
Vent screw	19
Seal ring	20
Support ring	23
Seal kit * consisting of:	
O-ring (see above)	7
Washer	15
O-ring (see above)	16
Seal ring	20
Support ring	23
O-ring (see above)	27

Description	Item
Gas valve insert *	3
Repair kit * [2] consisting of:	
Bladder	2
Gas valve insert	3
Lock nut	4
Cap nut	5
Valve protection cap	6
O-ring 7.5 x 2.0 [1]	7
Washer	15
O-ring 90 Shore: SB 330 H: Size 10 - 50 l = 100 x 5 [1] Size 35, 56, 75 l = 110 x 8	16
SB 330/400: Size 0.5 - 1 l = 37.69 x 3.53 Size 2.5 - 6 l = 55 x 3.5 [1] Size 10 - 50 l = 80 x 5 [1]	
SB 550: Size 1; 2.5 - 5 l = 50.17 x 5.33	
Seal ring	20
Support ring	23
O-ring 90 Shore: SB 330 H: Size 10 - 50 l = 62 x 4 [1] Size 35, 56, 75 l = 72 x 4	27
SB 330/400: Size 0.5 - 1 l = 17 x 3 [1] Size 2.5 - 6 l = 30 x 3 [1] Size 10 - 50 l = 48 x 3 [1]	
SB 550 Size 1; 2.5 - 5 l = 22.3 x 3 [1]	

6.5. HIGH PRESSURE ACCUMULATORS SB 800/1000

6.5.1 Construction

HYDAC high pressure bladder accumulators, type SB 800/1000, consist of a pressure vessel in high tensile steel and a flexible bladder to separate the nitrogen from the operating fluid. At the base of the bladder is a prevulcanised valve which shuts off the hydraulic outlet when fully empty and prevents damage to the bladder.

6.5.2 Dimensions available on request

Max. working pressure ([3])	Nom. volume litres	Eff. gas volume litres	Weight kg
800	1.5	1.3	31
1000			86
1000	10	10	180

* Recommended spare parts
[1] For code 663 and 665 different dimensions.
[2] When ordering please state bladder connection port size.
Item 1 not available as spare part
Item 25 has to be ordered separately (see page 11)
[3] TRB/AD Regulations

9. ACCUMULATOR UNIT ACCUSET

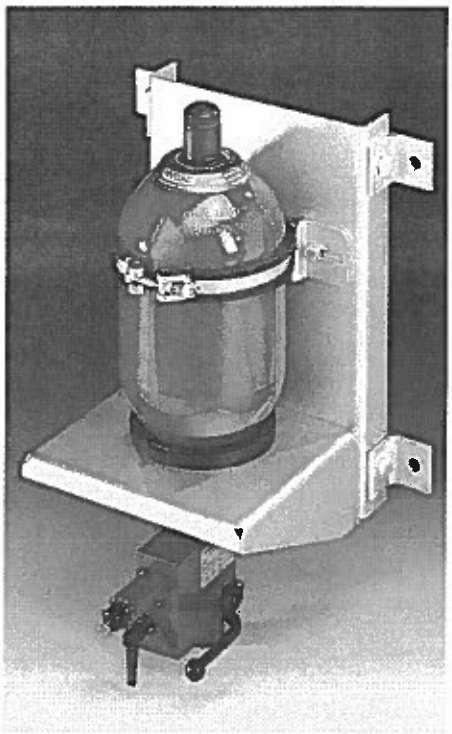

Compact, ready-to-install unit, consisting of hydraulic accumulator, safety and shut-off block and accumulator set.

10. ACCUMULATOR ACCESSORIES

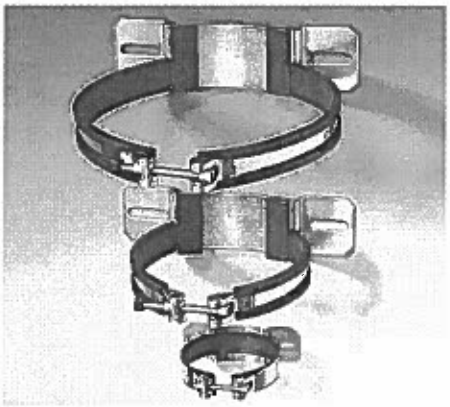

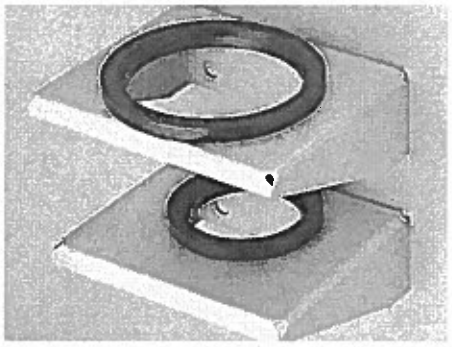

Accumulator Support
Accumulator sets, clamps, consoles and rubber support rings for optimum mounting of accumulators.

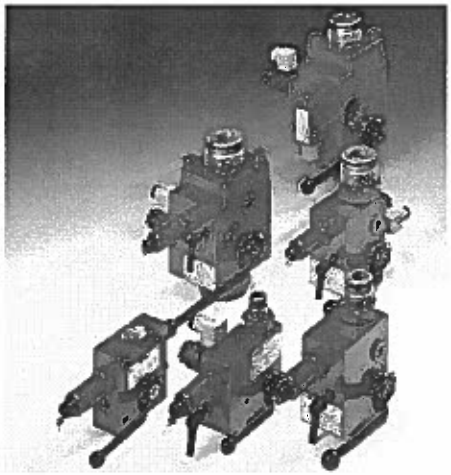

Safety and Shut-off Block SAF/DSV
with mechanical and/or electromagnetic discharge and test gauge connection.

Charging and testing unit FPU-1
with charging hose, pressure gauge and gas pressure release valve for HYDAC accumulators and other makes of accumulator up to 300 bar pre-charge pressure.

11. ACCUMULATOR STATIONS

We supply complete accumulator stations, ready for operation, including all necessary valves, ball valves and safety devices – both single accumulators and back-up type with nitrogen bottles to increase the effective volume.

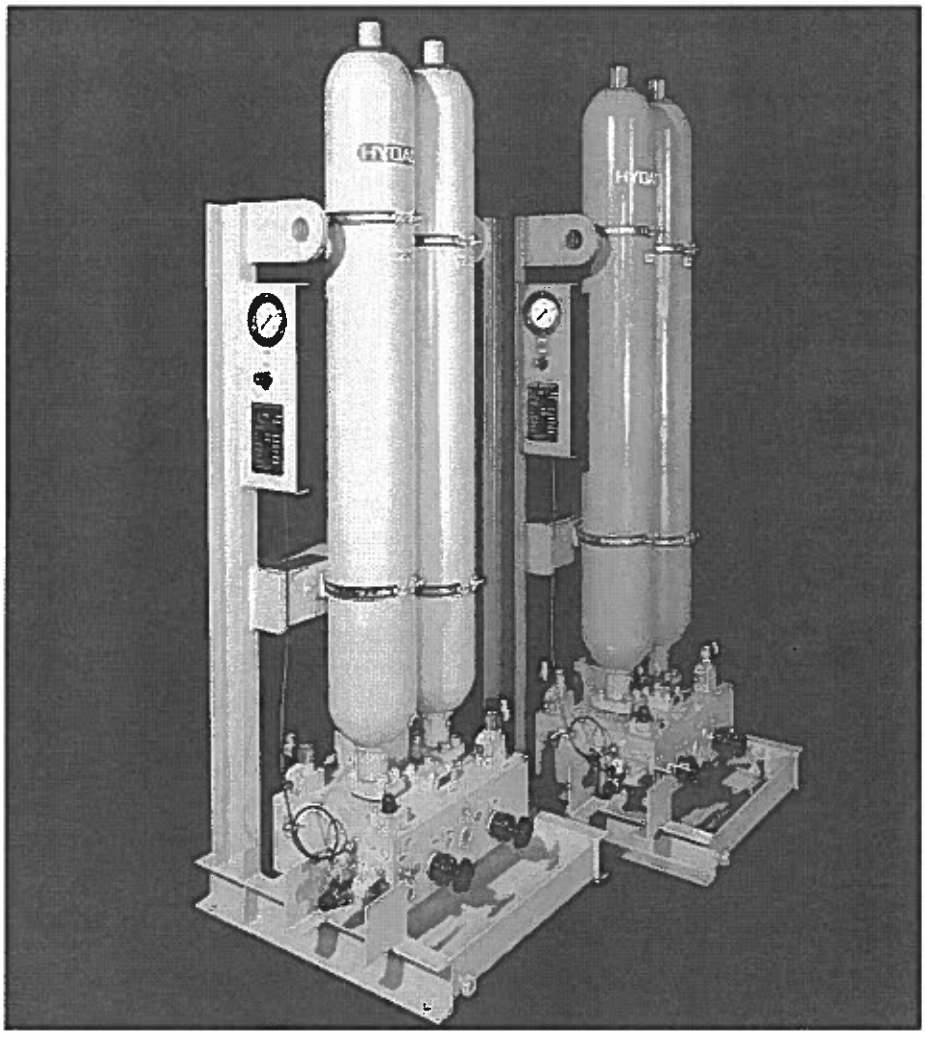

12. NOTE

All details in this brochure are subject to technical modifications.

HYDAC INTERNATIONAL

Operating and Installation Instructions for HYDAC Accumulators

1. General:

Prior to installation and during the operation of hydraulic accumulators, the regulations governing accumulators in the place of installation must be observed. In the USA and Canada accumulators are subject to ASME Pressure Vessel Code. In addition, HYDAC suggests a thorough inspection, including a pressure test, every 5 to 10 years depending upon the application.

HYDAC recommends the use of mounting components to minimize the risk of failure due to system vibrations; refer to HYDAC Mounting Components brochure #02071834.

As part of the commissioning process, vent all air from the system piping once the hydraulics have been connected.

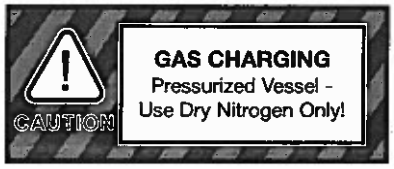

WARNING!

Hydraulic accumulators are pressurized vessels and only qualified technicians should perform repairs. **Never** weld, braze, or perform any type of mechanical work on the accumulator shell. **Never lift the accumulator by the gas valve.** Always drain the fluid completely from the accumulator before performing any work, such as recommended repairs *(see Maintenance Instructions)* or connecting pressure gauges.

Always observe the maximum working pressure, operating temperature range, pressure ratio, recommended flow rate, and mounting position. For details refer to specific HYDAC product literature. Never use car tire valve cores in accumulators. All defective parts should be replaced with original HYDAC parts.

2. Precharging The Accumulator:

Precharge new or repaired accumulators with dry nitrogen gas to the proper gas precharge pressure (P_0) prior to applying hydraulic system pressure.

2.1 Recommended Gas Precharge Pressure (P_0):

FOR ENERGY STORAGE	$P_0 = 0.9 \times P_1$
FOR SHOCK ABSORPTION	$P_0 = (0.6 \text{ to } 0.9) \times P_m$
FOR PULSATION DAMPENING	$P_0 = (0.6 \text{ to } 0.8) \times P_m$
P_1 = minimum working pressure	P_0 = median working pressure

2.2 Procedure

Remove valve protection and valve seal caps (where applicable). Attach appropriate HYDAC charging and gauging unit *(type FPS for HYDAC gas valve version 4, type FPK for HYDAC gas valve version 1 and type FPK with adapter FPK/SB for top repairable bladder accumulators)* to the accumulator by following the instructions in the HYDAC Charging and Gauging Units brochure # 02071833. Once attached, slowly open the shut-off valve on the commercially available nitrogen bottle and allow the gas to slowly enter the accumulator.

If gas precharge pressure is too low, continue charging; refer to HYDAC Charging and Gauging Units brochure #02071833.

If gas precharge is too high, it can be reduced by carefully opening the manual bleed valve and relieving some pressure.

Once the proper gas precharge pressure has been reached, disconnect the charging and gauging unit from the accumulator by following the instructions in the HYDAC Charging and Gauging Units brochure. Check for leaks; NONE are permissible. Torque valve seal cap *(see torque requirements below)* and hand tighten valve protection cap *(where applicable)*.

Notes:

1) When using FPK unit **DO NOT** use the "T"-handle in the charging and gauging unit to loosen the socket head cap screw; use a 6 mm Allen wrench.

2) HYDAC diaphragm accumulators with gas port version E2 are factory precharged and sealed with a welded steel plug. The gas precharge pressure **CANNOT** be adjusted.

Torque Requirements:

Gas valve Version 1	- socket head cap screw	- 20 Nm (15 lb-ft)
	- valve protection cap	- hand tighten *(where applicable)*
Gas Valve Version	- gas valve core	- 0.5 Nm (0.4 lb-ft)
	- valve seal cap	- 30 Nm (22 lb-ft)
	- valve protection cap	- hand tighten *(where applicable)*

2.3 Temperature Effects:

To ensure that the recommended gas precharge pressure is maintained, even at relatively low or high operating temperatures, the gas precharge pressure should be adjusted for temperature; refer to HYDAC Charging and Gauging Units brochure #02071833. When adjusting an existing gas precharge pressure allow 5 to 10 minutes for the gas precharge pressure to reach equilibrium. When precharging for the first time or after performing maintenance work, allow 20 to 30 minutes for the gas precharge pressure to reach equilibrium.

3 Checking Gas Precharge Pressure:

The gas precharge pressure on gas port version E2 can only be checked using the method described in paragraph 3.2.

3.1 Measuring Gas Precharge Pressure on the Gas Side:

To check precharge pressure, attach HYDAC charging and gauging unit by following the instructions in the HYDAC Charging and Gauging Units brochure #02071833. Once attached, turn "T" handle until pressure registers on gauge. Adjust gas precharge pressure if necessary *(refer to paragraph 2)*.

3.2 Measuring Gas Precharge Pressure on the Fluid Side:

This method requires that a pressure gauge be installed on the safety and shut-off block *(fig. 1, item 2)* or similar device, which is connected directly to the accumulator. The procedure utilizing the SAB Block is as follows:

- Using hydraulic system pressure fill accumulator with fluid.
- Close shut-off valve *(fig. 1, item 3)*.
- Discharge fluid slowly, by opening the manual bleed valve *(fig. 1, item 4)*.
- While draining the fluid, monitor the pressure gauge closely. The pressure in the gauge will suddenly drop to zero; the pressure indicated immediately prior to this sudden drop in the gas precharge pressure.

3.3 Intervals Between Checking:

The gas precharge pressure should be checked at least once during the first week of operation. If there is no loss of gas precharge pressure, it should be rechecked in 3 to 4 months. Thereafter, it should be checked at least once a year.

4 Safety Equipment

Based on pressure vessel and OSHA requirements, HYDAC recommends that the following safety equipment be used in conjunction with accumulators:

4.1 Safety and Shut-off Block *(SAB Block)*:

The Hydac safety and shut-off block *(see fig. 1)* was designed to incorporate the following safety features:

- Pressure measurement device.
- Pressure relief device.
- Shut-off device.
- Bleed down device *(manual or electric operation)*.
- Locking device

4.2 Thermal Fuse Cap:

In addition to the above, HYDAC also recommends the use of its Thermal Fuse Cap to release gas pressure in the event of a fire.

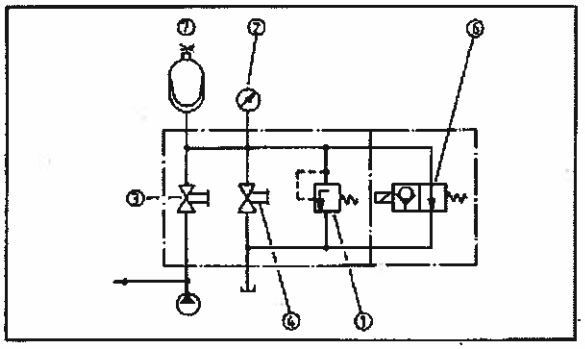

Fig. 1; Schematic of a HYDAC Safety and Shut-off Block:

1 - pressure relief valve
2 - pressure gauge *(optional)*
3 - shut-off valve
4 - manual bleed valve
6 - solenoid operated bleed valve *(optional)*
7 - thermal fuse cap *(optional)*

© Copyright 2000 HYDAC TECHNOLOGY CORPORATION - Brochure - *Operating & Installation Instructions for HYDAC Accumulators* #02072837 / 08.00

HYDAC

HYDAC CORPORATION
2280 City Line Road • Bethlehem, PA 18017
Phone (610) 266-0100 • Fax (610) 264-3540
www.hydacusa.com • powerup@hydacusa.com