420.1 - DECK CRANE V823-4S - WINCH OWNERS MANUAL

ROTZLER TITAN

TC2

OWNER'S MANUAL

INSTALLATION, OPERATION AND MAINTENANCE INSTRUCTIONS FOR ROTZLER TITAN PLANETARY HYDRAULIC WINCHES

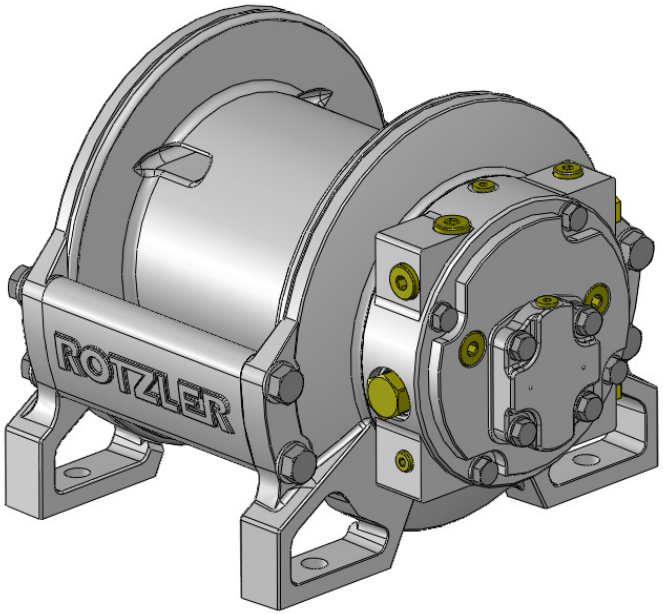

THIS MANUAL CONTAINS IMPORTANT INFORMATION FOR THE SAFE USE OF THIS WINCH. READ AND UNDERSTAND ALL INSTRUCTIONS BEFORE INSTALLING, OPERATING OR MAINTAINING THIS WINCH. MAKE THIS MANUAL AVAILABLE TO RESPONSIBLE PERSONNEL.

WARRANTY - INTRODUCTION

The Identification Label, located on the outside of the winch Final Base, lists important operating specifications for the particular winch. This Label must not be removed, altered or have its technical data obscured. If the data becomes illegible, contact the factory for a replacement Label.

The cable and other load lifting attachments are not part of the winch. Subsequently, Rotzler Inc. cannot be held responsible for any damages resulting from their failure.

WARRANTY

IMPORTANT: ROTZLER TITAN WINCHES ARE NOT DESIGNED NOR INTENDED TO MOVE PERSONNEL. ROTZLER INC. CANNOT BE HELD RESPONSIBLE FOR ACCIDENTS OCCURRING FROM SUCH USE.

I.) Rotzler Inc. warrants each new Titan winch, assemblies and components thereof, to be free from defects in materials and workmanship for a period of two years from the date of the original purchase by Rotzler Inc.'s original customer, provided the unit is installed, operated and maintained in accordance with the instructions given in the Owner's Manual.

II.) Wearable or consumable components such as O-rings, Shaft Seals, Brake Discs and Brake Separators are excluded from this warranty unless a material or workmanship defect is detected in these components at the time of the initial winch installation.

III.) The obligation of Rotzler Inc. under this warranty is exclusively limited. Rotzler Inc. reserves the option of either replacing all components, supplied and manufactured by Rotzler Inc. and found to be defective by reason of faulty material or workmanship, or furnishing a complete replacement winch. In either case, the replacement components or winch will be supplied freight collect, Free Carrier, the factory.

IV.) Rotzler Inc. shall not be liable for any consequential damages or expenses of disconnecting or removing a unit or components thereof, nor any cost incurred in diagnosing a failure.

V.) Rotzler Inc. neither assumes nor authorizes any person to assume on their behalf, any other liabilities in connection with the sale of Rotzler Inc. products.

VI.) This warranty shall not apply to any units which have been repaired or altered without express written consent from Rotzler Inc.

VII.) This warranty shall not apply to winches subjected to misuse or neglect or operated or maintained other than in strict accordance with the specifications provided and the instructions given in this Owner's Manual.

TABLE OF CONTENTS

1. INTRODUCTION PAGE
DESCRIPTION OF WINCH FUNCTION 2
MODEL CODE..... 3
AVAILABLE OPTIONS 3
AVAILABLE ACCESSORIES..... 3
PERFOMANCE DATA 3

2. TECHNICAL DATA
TECHNICAL DATA – TC2.XX.31.XX.0 4

3. HYDRAULIC SYSTEM
HYDRAULIC SYSTEM 6

4. INSTALLATION
WINCH INSTALLATION 7
ADDING GEAR LUBRICATING OIL 7
HYDRAULIC SYSTEM CONNECTION..... 8
CABLE SELECTION AND INSTALLATION 8
INSTALLATION INSPECTION..... 9

5. OPERATION
SAFETY INSTRUCTIONS 10
OPERATING INSTRUCTIONS 10
ALLOWABLE OPERATING TEMPERATURE..... 10
CABLE HANDLING INSTRUCTIONS 10
SPECIAL INSTRUCTIONS – EXTERNAL
BRAKE RELEASE..... 13

6. MAINTENANCE PAGE
INTRODUCTION 12
CABLE MAINTENANCE 12
PREVENTIVE MAINTENANCE 12
HYDRAULIC SYSTEM TROUBLE SHOOTING 13
WINCH TROUBLE SHOOTING 14
GENERAL SERVICE INSTRUCTIONS..... 17
SERVICE INSTRUCTIONS 18
SPECIAL INSTRUCTIONS – STAINLESS
STEEL SCREWS 19

7. ORDERING
TECHNICAL INFORMATION..... 19
SEAL AND SERVICE KITS..... 19
ORDERING REPLACEMENT COMPONENTS..... 19

8. DRAWINGS
WINCH DRAWING 20
511-31 STANDARD MOTOR ASSEMBLY DRAWING..... 22
PRIMARY ASSEMBLY DRAWING 24
CLUTCH ASSEMBLY DRAWING 26
FINAL ASSEMBLY DRAWING 28

1. INTRODUCTION

⚠ WARNING

FAILURE TO FOLLOW RECOMMENDATIONS CONTAINED IN THIS MANUAL COULD RESULT IN WINCH FAILURE AND ALLOW THE LOAD TO DROP, CAUSING PROPERTY DAMAGE, SEVERE INJURY OR DEATH. READ AND UNDERSTAND THIS MANUAL BEFORE INSTALLING, OPERATING OR MAINTAINING THIS WINCH.

Be familiar and comply with all local rules and regulations governing winches, hoisting and pulling units.

Rotzler Inc. Titan winches are not designed, nor intended to lift or move personnel.

Do not hesitate to contact Rotzler Inc. for assistance regarding the installation, operation and maintenance of the winch.

Rotzler Inc. reserves the right to change the design and documentation of the winch without notice and without obligation.

The copyright of this manual and other documentation belongs to Rotzler Inc. The contents are not to be copied in whole or in part, communicated to others or used for competitive purposes.

DESCRIPTION OF WINCH FUNCTION

- **DESCRIPTION OF WINCH FUNCTION - HOISTING**

Hydraulic pressure applied at the Motor hoisting port rotates the primary sun gear. The high speed sun gear rotation is reduced through a two stage planetary gear reduction to provide high torque rotation of the Cable Drum.

The Sprag Clutch allows the Brake Shaft to turn freely in the hoisting direction, independent of the winch brake system.

Hydraulic pressure, proportional to the load that is being lifted, develops at the Motor hoisting port.

Increasing the volume of oil supplied to the Motor increases the hoisting speed. When the oil supply is halted, the winch stops hoisting. The Sprag Clutch then locks the Brake Shaft to the brake system and prevents the load from lowering.

- **DESCRIPTION OF WINCH FUNCTION - LOWERING**

When the winch is not moving, the Sprag Clutch locks the Brake Shaft to the spring applied, pressure released brake system and secures the load.

Some of the hydraulic fluid supplied to the Motor is diverted to the Brake Piston. As the operator increases pressure at the Motor lowering port, pressure also develops at the Brake Piston and partially releases the brake. When the diminished brake is no longer able to sustain the combined torque of the motor and load, the Brake Discs slip and the winch begins to lower the load.

The Motor regulates pressure at the Brake Piston to control the speed of the lowering load. The force of gravity on the lowering load attempts to turn the winch Drum faster than the operator requires. The motor is then forced to turn faster than the hydraulic supply can satisfy and consumes oil, reducing pressure at the Brake Piston. The brake torque then increases and slows the load. In this manner, the Motor continuously regulates the Brake Piston pressure and positively controls the lowering load without using a counter-balance or holding valve.

Increasing the volume of oil supplied to the hydraulic motor increases the lowering speed. When the oil supply is halted, the winch stops lowering and the brake fully applies and secures the load.

When lowering a load, heat is generated as the Brake Discs slip through the Brake Separators. An orifice in the Brake Piston restricts the volume of oil permitted to circulate through the brake plate stack and dissipate this heat.

MODEL CODE

A model code describes the winch configuration as follows:

TC2 .-. CC .31. 0 2 .0. ---

SERIES: Rotzler Titan TC Series Winch
SIZE: Nominal Bare Drum Line Pull Capacity (tonnes)
REVISION: Revision level indicates design changes for internal use only
ROTATION: Direction of Cable Drum rotation when hoisting (looking at the motor):
CC = Counterclockwise (standard) CW = Clockwise
MOTOR: Hydraulic Motor displacement: 31cc (standard)
VALVE: Optional counterbalance valve: 0 = no valve (standard) V = CB valve
MOTOR PORT POSITION: Direction of Motor ports: 2 = horizontal right (standard)
CABLE DRUM: Cable Drum configuration: 0 = Standard
SPECIAL OPTIONS: Used for options not described above.

AVAILABLE OPTIONS

Rotzler Titan TC2 winches are available with the following options:

- CC or CW Cable Drum rotation when hoisting.
- Other motors to suit special hydraulic systems.
- Special paint finish.
- Stainless steel screws for improved corrosion resistance.

AVAILABLE ACCESSORIES

Accessories for use with Rotzler Titan TC2 winches are available as follows:

- External Brake Release Kit allows releasing the brake and lowering a load with an auxiliary hydraulic supply capable of delivering at least 2 USGPM [7.5L/min] at 1000 psi [70 bar].

PERFORMANCE DATA

Performance data follows for winches with standard cable and optional motors. When other options are supplied, the particular performance data is inserted as required.

- **IDENTIFICATION LABEL**

An Identification Label is located on the outside of the Final Base, identifying the specific winch serial number and important technical data critical for the safe operation model configuration, of the winch. An area is provided at the back of this manual to record this data for future reference.

This Label must not be removed, altered or have its technical data obscured. If the data becomes illegible, contact Rotzler Inc. for a replacement label.

2. TECHNICAL DATA – TC2.XX.31.XX.0

#TC2.**.31.**.0 REV C

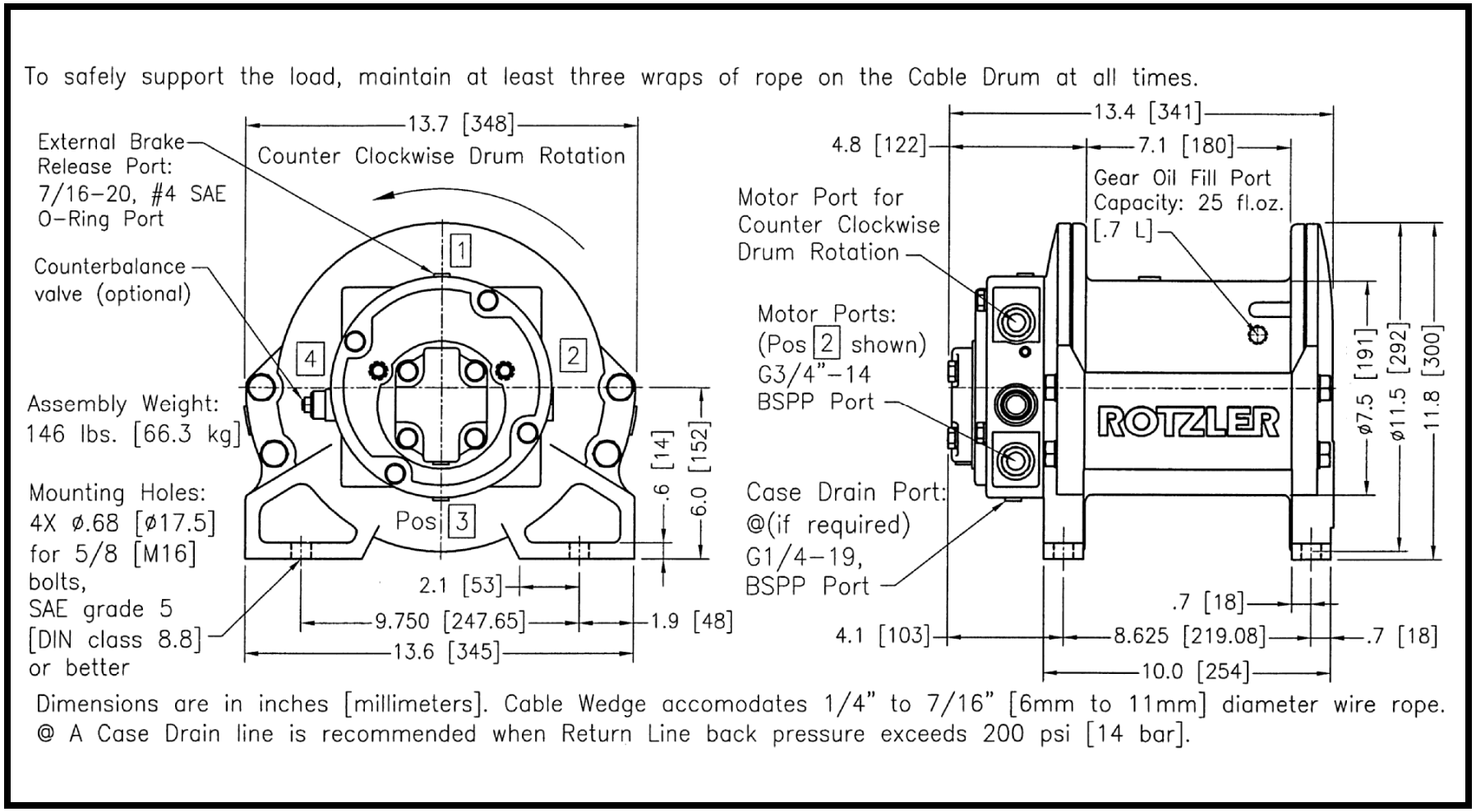

- **CABLE DRUM STORAGE CAPACITY**

CABLE SIZE	1/4”	5/16”	3/8”	7/16”	6 mm	8 mm	9 mm	10 mm	11 mm
STORAGE CAPACITY	447’	308’	212’	142’	169 m	93 m	68 m	62 m	44 m

- **LINE PULL –TC2.XX.31.XX.0**

SYSTEM PRESSURE	DRUM TORQUE	LINE PULL AT SYSTEM PRESSURE
Maximum system pressure: 3000 psi [207 bar]	23653 in-lb [2673 N·m]	Bare Drum: 6000 lb [26.7 kN]
		Full Drum: 4500 lb [20 kN]
Minimum System Pressure: 1000 psi [70 bar]	7884 in-lb [891 N·m]	Bare Drum: 2000 lb [9 kN]
		Full Drum: 1500 lb [6.7 kN]

- **LINE SPEED – TC2.XX.31.XX.0**

SYSTEM VOLUME	DRUM SPEED	LINE SPEED AT SYSTEM VOLUME
Maximum System Volume: 22 USGPM [83 L/min]	64 RPM	Bare Drum: 132 ft/min [40 m/min]
		Full Drum: 176 ft/min [54 m/min]
Minimum System Volume: 5 USGPM [20 L/min]	15 RPM	Bare Drum: 30 ft/min [9 m/min]
		Full Drum: 40 ft/min [12 m/min]

- **PERFORMANCE GRAPHS – TC2.XX.31.XX.0**

The following graphs show the winch performance with 3/8” diameter cable on various layers of the Cable Drum.

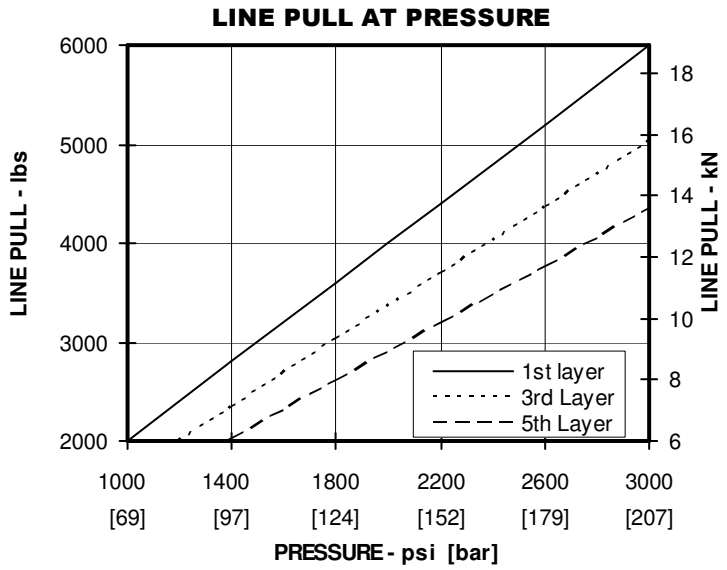

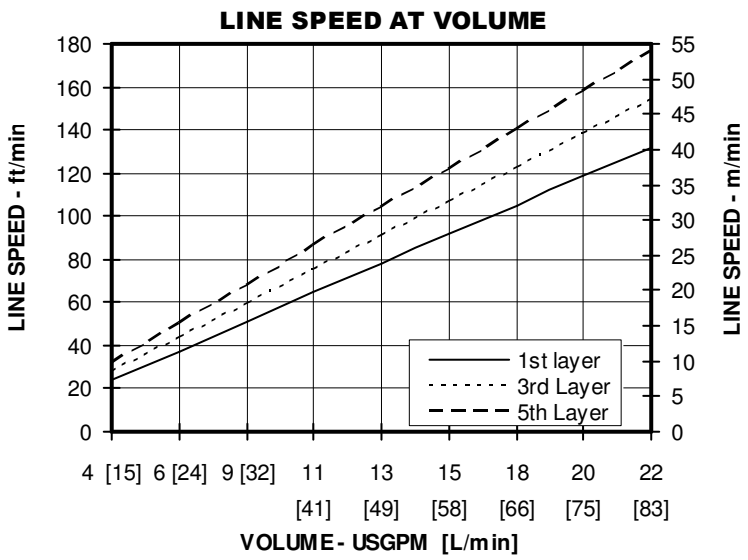

3. HYDRAULIC SYSTEM

To achieve the specified line pull and line speed performance, the hydraulic power unit must be capable of delivering the specified hydraulic pressure and flow.

The maximum allowable return line back pressure is 200 psi [14 bar]. If system back pressure cannot be limited to 200 psi [14 bar], remove Motor Plug #240+241 and connect a hose to drain the excess brake cavity pressure directly to tank. Do not connect to a common return line.

- **HYDRAULIC SYSTEM FLUID** - Use premium grade petroleum based hydraulic fluid. For optimum performance the fluid viscosity should be maintained between 60 and 1400 SUS [10 and 300 cSt]. The operating viscosity in extreme conditions, for short periods of time, should not exceed 45 and 4545 SUS [10 and 1000 cSt]. The recommended operating temperature range of the hydraulic fluid is between 5 and 150 deg F [-15 and 66 deg C].
- **CONTROL VALVE** - A four-way three position, spring centered control valve with motor spool is recommended. For optimum winch performance, work ports should be connected to tank in neutral position. If a control valve with cylinder spool must be used, remove Motor Plug #240+241 and connect a hose to drain the excess brake cavity pressure directly to tank. Do not connect to a common return line. To provide smooth control at low speeds, a valve with good metering capability is required.
- **RELIEF VALVE** - A pressure relief valve is required to limit the maximum system pressure supplied to the winch and avoid possible over load damage.
- **RESERVOIR** - A well designed and manufactured reservoir is important. Ensuring return lines enter the reservoir below the fluid level and using baffles to divert the oil path reduces air entrapment. To prevent oil contamination, the reservoir must be constructed and maintained in a clean condition. The reservoir must have sufficient surface cooling capacity to dissipate the heat generated in the oil by the brake during lowering.
- **FILTER** - A high quality, well maintained filter is an important component in any hydraulic system. Typically, other system components will dictate the required filtration level. The recommended minimum requirement is a 10 micron filter.
- **HOSES** - Size hydraulic hoses and fittings to accommodate the winch maximum hydraulic pressure and flow. The following minimum recommendation is made for the Rotzler Titan TC2 winch:
  - Standard Motor pressure hoses: 1” [25 mm] diameter, 3000 psi [207 bar] operating pressure, grade SAE 100R9 or better. Use larger diameter hoses when extra long lines are required. Refer to factory for hose recommendations when using optional motors.

When rigid tube or pipe is used to plumb the control valve, minimize vibration damage by using short flexible jumper hoses immediately at the winch.

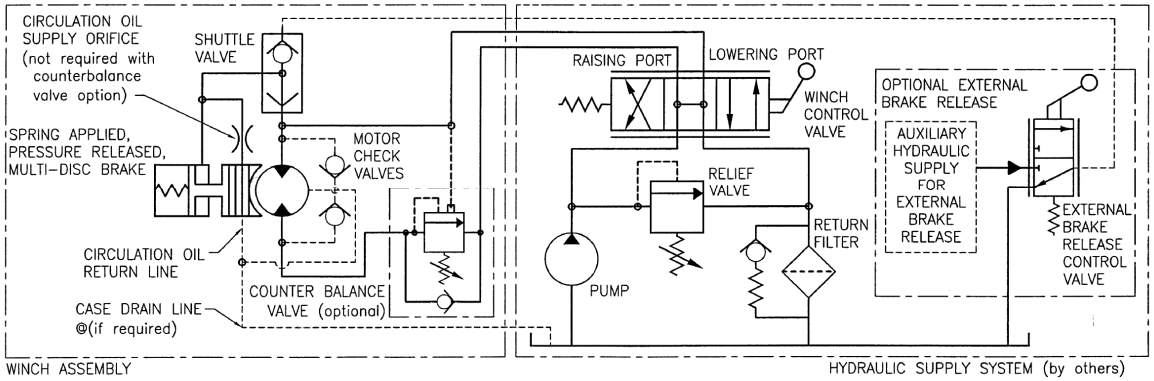

TC2.**.31.**.0 REV C

4. INSTALLATION

Rotzler Titan winches are to be installed by trained and authorized personnel who have read and understand the installation instructions in this manual. This manual is to be kept near the winch and made accessible to installation personnel.

⚠ WARNING

FAILURE TO FOLLOW WINCH MOUNTING INSTRUCTIONS COULD RESULT IN WINCH FAILURE AND ALLOW THE LOAD TO DROP, CAUSING PROPERTY DAMAGE, SEVERE INJURY OR DEATH. READ AND UNDERSTAND THE FOLLOWING INSTRUCTIONS BEFORE INSTALLING THIS WINCH.

IMPORTANT: FOR PROPER LUBRICATION OF THE INTERNAL GEAR COMPONENTS, MOUNT THE WINCH HORIZONTALLY.

WINCH INSTALLATION

Initial winch mounting is critical for safe operation and optimum performance. Prevent distortion of the winch's centerline by mounting as follows:

- Verify that the winch mounting support structure is adequately designed and constructed to withstand the intended loads with minimal deflection.
- Verify that the mounting surface and the underside of the winch are clean of rust, scale, loose paint, dirt, oil and grease.
- Position the winch on the mounting structure.
- Use hardened steel Structural flat washers between the mounting bolt and the cast Base.
- Inspect each of the four winch feet for contact with the mounting surface. If one of the feet does not contact the mounting surface, correct as follows:
  - Install the recommended mounting bolts (refer to **GENERAL DIMENSIONS** for required size and grade) on the three mounting feet that are in contact with the mounting surface. Lightly tighten until snug.
  - Use shim stock to securely fill the gap beneath the fourth mounting foot.
  - Install the fourth mounting bolt.
  - Fully tighten all four mounting bolts to torque recommended for particular connection design.

ADDING GEAR LUBRICATING OIL

IMPORTANT: THE WINCH IS SHIPPED FROM THE FACTORY WITHOUT GEAR LUBRICATING OIL. TO PREVENT MAJOR WINCH COMPONENT FAILURE, ADD GEAR LUBRICATING OIL PRIOR TO RUNNING THE WINCH.

Add gear lubricating oil as follows:

- Remove the Pipe Plug located on the Cable Drum barrel and the Relief Valve located on the outside of the Final Base.
- Pour high quality SAE 90 gear lubricant oil into the Cable Drum through the Plug port (refer to **GENERAL DIMENSIONS** for required volume). In severe applications, gear tooth wear can be reduced by using a high performance gear lubricant such as Swepco #201 Multi-Purpose Gear Lube.
- Fill the Cable Drum until gear oil appears at the Final Base Relief Valve port. The Cable Drum is now properly half filled with gear oil.
- Install the Relief Valve and Cable Drum Pipe Plug, using Loctite #565 Thread Sealant to seal threads.

HYDRAULIC SYSTEM CONNECTION

Recommendations for the selection and arrangement of hydraulic system components are given in the **HYDRAULIC SYSTEM** section of this manual.

Before connecting the winch, verify that the hydraulic system produces the required hydraulic fluid pressure and volume. The Motor hoisting and lowering ports are identified in **GENERAL DIMENSIONS**.

Run the winch without load in both directions using the hydraulic system control valve. Ensure that the brake is effective in the appropriate direction of rotation by verifying that the motor develops significantly higher pressure when lowering than when hoisting.

CABLE SELECTION AND INSTALLATION

The cable and other load lifting attachments are not part of the winch and are not covered by this manual. Refer to the manufacturer's recommendations for proper cable selection, handling, inspection and maintenance.

It is the responsibility of the user to identify and follow applicable local regulations governing lifting operations and equipment, including the selection and allowable loading of cable.

- **CABLE INSTALLATION - FLEET ANGLE**

For proper spooling onto the Cable Drum, the cable angle must not exceed the maximum allowable fleet angle as indicated below. To satisfy this requirement, the distance from the drum to the first sheave must exceed 14 times the distance between the drum flanges.

#720-004 REV C

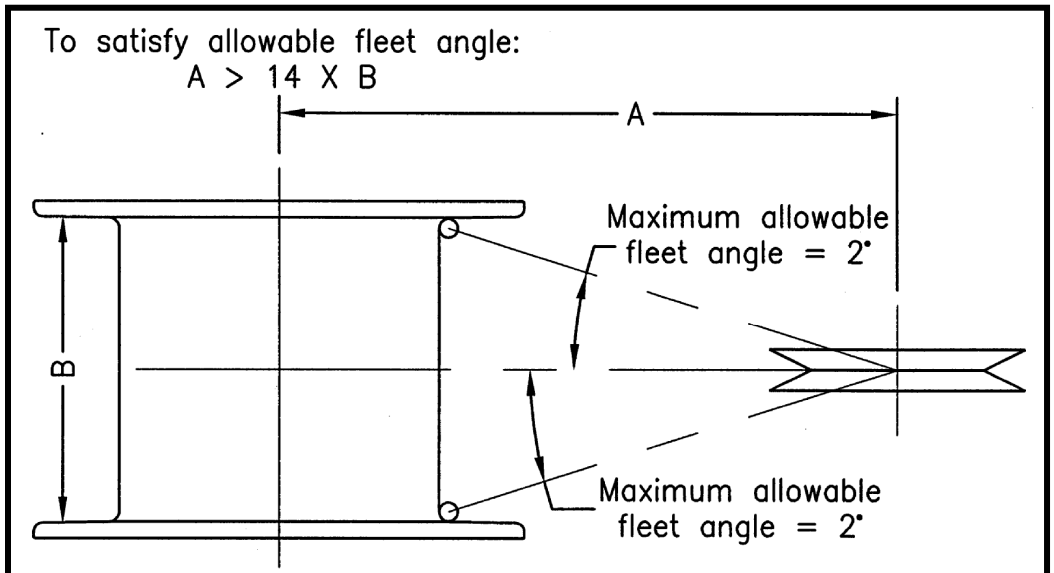

INSTALLED CABLE FLEET ANGLE

- **CONNECTING THE CABLE**

⚠ WARNING

IMPROPER CABLE CONNECTION COULD ALLOW THE LOAD TO DROP, CAUSING PROPERTY DAMAGE, SEVERE INJURY OR DEATH. READ AND UNDERSTAND THE FOLLOWING INSTRUCTIONS BEFORE CONNECTING THE CABLE.

The winch brake can support the load in one direction only. It is therefore critical to ensure that the cable is correctly connected to the Drum.

The Cable Drum has a single pocket which allows the cable to be connected for either counter clockwise or clockwise hoisting. When shipped from the factory, a Rotation Label indicating direction of hoisting and connection instructions is attached to the Cable Drum.

Connect the cable to the Drum as follows (refer to diagram):

- Identify the appropriate direction of rotation from the Rotation Label.
- Pass the cable through the cable slot as shown. Bring the loose end around and back into the slot to form a large loop.
- Push the loose end of the cable through the slot until it is even with the opening. Do not let it protrude from the Drum barrel.
- Insert the Cable Wedge tapered end first, into the slot at the center of the cable loop. Tighten the cable while maintaining the Wedge in position.
- As the cable is pulled tight, ensure that the end of the cable stays even with the slot opening as shown.
- Wind at least three complete wraps of cable onto the Cable Drum before connecting the load.

INSTALLATION INSPECTION

⚠ WARNING

HOISTING THE LOAD WITH AN IMPROPERLY INSTALLED WINCH COULD RESULT IN WINCH FAILURE AND ALLOW THE LOAD TO DROP, CAUSING PROPERTY DAMAGE, SEVERE INJURY OR DEATH.
INSPECT AND TEST WINCH INSTALLATION BEFORE HOISTING HEAVY LOADS TO POTENTIALLY DANGEROUS HEIGHTS.

Verify proper winch installation by slowly lifting and lowering a full test load to a safe height several times before lifting a heavy load to a potentially dangerous height.

#720-004 REV C

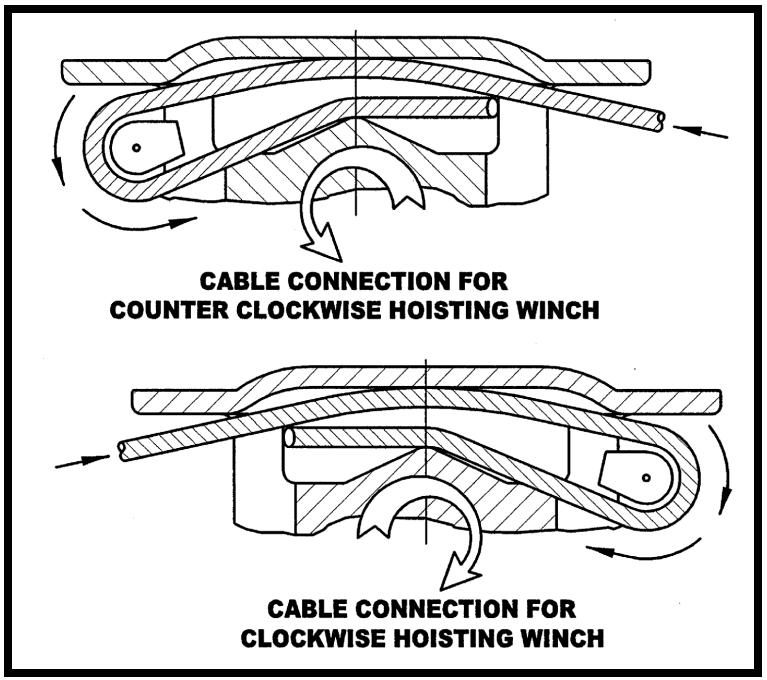

5. OPERATION

SAFETY INSTRUCTIONS

⚠ WARNING

IMPROPER WINCH OPERATION COULD ALLOW THE LOAD TO DROP, CAUSING PROPERTY DAMAGE, SEVERE INJURY OR DEATH. READ AND UNDERSTAND THE FOLLOWING INSTRUCTIONS BEFORE OPERATING THIS WINCH.

Rotzler Titan winches are to be operated by trained and authorized personnel who have read and understand the operating instructions in this manual. This manual is to be kept near the winch and made accessible to the operating personnel.

Rotzler Titan winches are not designed, nor intended to lift or move personnel.

Rotzler Titan winches must be installed and operated according to instructions given in this manual.

Operating and safety recommendations made by the manufacturers of other related equipment must also be followed.

It is the operator's responsibility to know and ensure that all local regulations governing hoisting operations are followed.

OPERATING INSTRUCTIONS

The hydraulic control valve controls the direction and speed of the winch. A valve with good metering characteristics will provide good low speed control of the load. Returning the valve to neutral allows the brake to apply and secure the load.

The Cable Wedge pocket is not intended to support the full load. To safely support the load, maintain at least three wraps of rope on the Cable Drum at all times.

The winch must be operated within the load and speed limits stated on the Final Base Identification Label.

When hoisting a load, the operator must maintain visual contact with the load and the immediate operating area. If the operator does not have clear sight of the load, auxiliary personnel or equipment must be used to ensure that the load is lifted safely.

Spooling is improved by maintaining tension on the wire rope.

ALLOWABLE OPERATING TEMPERATURE

Operate the winch only when the hydraulic fluid temperature is within the recommended operating temperature range specified in the **HYDRAULIC SYSTEM** section of this manual.

Operate the winch only when ambient temperature is between 5 and 140 deg F [-15 and 60 deg C].

Contact Rotzler Inc. if it is required to operate the winch in extreme temperatures, vibration, sand, dust or other detrimental environmental conditions.

CABLE HANDLING INSTRUCTIONS

When working with steel cable, always wear gloves. Never use your hands to guide a tight cable.

Do not allow the cable to pass over sharp edges.

Clean and check the cable after every use. Be familiar and comply with all local rules and regulations governing cable inspection and replacement criteria. Replace damaged cable immediately.

SPECIAL INSTRUCTIONS - EXTERNAL BRAKE RELEASE

Refer to the following instructions to release the winch brake and lower a load using an auxiliary hydraulic supply system and the optional External Brake Release Kit #9271804000 (#220-091).

- **DESCRIPTION OF EXTERNAL BRAKE RELEASE FUNCTION**

The External Brake Release Kit is comprised of a Steel Ball #400000668 (#220-051) and an External Brake Release Fitting #4000006890 (#220-050). These parts are positioned inside the external brake release port of the Motor Shaft End Cover.

The Steel Ball acts as a shuttle valve and prevents auxiliary hydraulic oil supplied at the External Brake Release Fitting from dumping to tank through the Motor. When auxiliary oil is supplied to the Brake Piston, pressure develops and partially releases the Brake. When the diminished brake can no longer hold the load, the Brake Discs slip and the load begins to lower.

Oil passes through the Brake Piston orifice and circulates through the Brake Discs to dissipate heat generated when slipping. This oil then passes through the Motor and back to tank.

⚠ WARNING

FAILURE TO VENT THE EXTERNAL BRAKE RELEASE FITTING TO TANK DURING NORMAL WINCH OPERATION COULD TRAP PRESSURE AT THE BRAKE PISTON AND ALLOW THE LOAD TO DROP, CAUSING PROPERTY DAMAGE, SEVERE INJURY OR DEATH. ENSURE THAT THE EXTERNAL BRAKE RELEASE FITTING IS VENTED TO TANK WHEN NOT IN USE.

- **AUXILIARY HYDRAULIC SUPPLY SYSTEM**

The auxiliary system must continuously supply at least 2 USGPM [7.5 L/min] at 1000 psi [70 bar] through a three way, two position, spring returned, control valve to the External Brake Release Fitting.

The valve work port must be connected to tank in the neutral position. A very sensitive control valve is required to control the speed of the lowering load.

The auxiliary system can be permanently plumbed to the External Brake Release Fitting or connected as required. In either case, the Fitting must be vented to tank when not in use and never capped.

- **INSTALLATION**

When installed at the factory, the External Brake Release Fitting comes installed in the Motor Shaft End Cover port and protected by a Plastic Cap #4000005989 (#220-082).

When installing the External Brake Release Kit into an existing winch, remove the Motor Shaft End Cover Plug #9272214000 (#220-072) and insert the Steel Ball into the Motor Shaft End Cover external brake release port. Then install and tighten the External Brake Release Fitting.

- **OPERATION**

Supply oil through the auxiliary control valve to the External Brake Release Fitting. Increase the flow of oil to increase pressure and allow the load to drop faster. Return the valve to neutral to reduce the flow of oil and slow or stop the lowering load. A valve with very fine metering capability can be carefully modulated to allow some speed control.

Oil passing through the Brake Piston orifice removes heat from the Brake Discs and must be allowed to vent to tank through the Motor hoses.

IMPORTANT: CIRCULATION OIL MUST BE ALLOWED TO RETURN TO TANK THROUGH THE MOTOR HOSES. ENSURE THAT THE MOTOR PORTS ARE NOT PLUGGED WHEN SUPPLYING AUXILIARY OIL AT THE EXTERNAL BRAKE RELEASE FITTING.

6. MAINTENANCE

⚠ WARNING

FAILURE TO PROPERLY MAINTAIN AND SERVICE THE WINCH COULD RESULT IN A MAJOR MECHANICAL FAILURE AND ALLOW THE LOAD TO DROP, CAUSING PROPERTY DAMAGE, SEVERE INJURY OR DEATH. READ AND UNDERSTAND THE FOLLOWING INSTRUCTIONS BEFORE MAINTAINING THIS WINCH.

INTRODUCTION

Rotzler Titan winches are to be maintained by trained and authorized personnel who have read and understand the maintenance instructions in this manual. This manual is to be kept near the winch system and made accessible to the maintenance personnel.

Safe operation and optimum performance can only be assured when maintenance intervals are strictly followed. Be familiar and comply with all local rules and regulations governing the maintenance of hoisting equipment.

When maintaining the winch, ensure that the control system is deactivated and appropriate protective lock out devices are in place to prevent inadvertent winch start up during service.

CABLE MAINTENANCE

⚠ WARNING

CABLE WEARS OUT. FAILURE TO DETECT CABLE DAMAGE CAN LEAD TO UNEXPECTED CABLE FAILURE AND ALLOW THE LOAD TO DROP, CAUSING PROPERTY DAMAGE, SEVERE INJURY OR DEATH.

The cable is supplied independent of the winch and is not covered in this manual. Refer to manufacturer's recommendations for inspection and maintenance instructions.

Be familiar with and adhere to any local or national regulations governing the replacement of wire ropes used in hoisting operations.

- **REPLACING A DAMAGED CABLE**

Replace damaged cable as follows:

- Spool the cable off of the Drum until only the end secured in the Cable Wedge remains.
- Rotate the Drum until the Cable Wedge socket is easily accessible.
- Dislodge the Cable Wedge by pushing the cable rope into the Cable Wedge socket.
- Remove the Cable Wedge and pull the free end of the cable through the socket.
- Discard damaged cable and install new cable according to instructions in **CABLE SELECTION AND INSTALLATION.**

PREVENTIVE MAINTENANCE

Perform a basic inspection of the winch daily, monitoring for unusual noise or hydraulic leaks. Clean and check the cable for damage daily. Verify the tension of all mounting bolts weekly.

- **MAINTAINING GEARBOX LUBRICATING OIL**

Inspect the gearbox lubricating oil level through the Final Base Relief Valve port every two months. Maintain the oil level at the half-full point. Repeated loss of lubricating oil indicates a leak and should be investigated.

After the initial 100 hours of operation or two months, whichever comes first, drain the lubricating oil, flush the Cable Drum and add new oil. Subsequently, change the lubricating oil after every 1000 hours of operation or every two years, whichever comes first.

- **MAINTAINING HYDRAULIC SYSTEM FLUID**

Inspect and maintain the hydraulic system filter and other components according to the manufacturers' recommendations. Once a year, verify the condition of the hydraulic system fluid by having it analyzed for cleanliness, oxidation, color and viscosity. Increase this frequency in severe operating or environmental applications. Clean or replace fluid as required.

- **PERIODIC PERFORMANCE VERIFICATION**

Verify the performance of the winch every two months. In critical applications, this frequency should be increased. Major service problems are avoided by careful monitoring and early fault detection.

Hoist and lower a full test load at full hydraulic volume. Record the following measurements for evaluation and retain for future reference:

	NO LOAD		FULL LOAD	
	HOIST	LOWER	HOIST	LOWER
Pressure at motor port A				
Pressure at motor port B				
Cable Drum RPM				

Refer to **WINCH TROUBLE SHOOTING** if:

- Winch does not smoothly hoist and lower the full test load.
- Any abnormal noises are detected.
- Test measurements vary from specifications listed in **PERFORMANCE DATA** or from previously recorded measurements
- Motor does not develop at least 200 psi [14 bar] at the lowering port when lowering full test load at full hydraulic volume.
- Any hydraulic fluid or gear box lubricating oil leaks are detected.

- **PERIODIC OVERHAUL AND INSPECTION**

A complete disassembly and internal inspection of the winch should be performed after every 1000 hours of operation or every two years, whichever comes first.

- Remove winch to a clean, well lit shop area.
- Disassemble, inspect and service winch as required according to **DISASSEMBLY INSTRUCTIONS**. Discard all O-Rings and Shaft Seals.
- Thoroughly clean all components.
- Assemble the winch according to **ASSEMBLY INSTRUCTIONS**, replacing all O-rings and Shaft Seals.
- Remount and test the winch according to **INSTALLATION INSTRUCTIONS**.

HYDRAULIC SYSTEM TROUBLE SHOOTING

Before trouble shooting an apparent winch fault, ensure that the hydraulic system is delivering the specified hydraulic pressure and volume. Hydraulic system problems are frequently incorrectly diagnosed as winch problems.

An in-line flow meter installed immediately at the winch can be used to confirm adequate hydraulic system supply volume through the winch motor. A faulty hydraulic system pump, relief valve or control valve could divert the hydraulic supply and reduce the winch speed.

Pressure gauges installed immediately at the winch motor ports can be used to confirm adequate hydraulic system supply pressure. A faulty hydraulic system pump, relief valve or control valve could reduce the hydraulic supply pressure and diminish the winch pulling capacity.

If the fault persists and the hydraulic system performance has been verified, refer to **WINCH TROUBLE SHOOTING**.

WINCH TROUBLE SHOOTING

SYMPTOM	POSSIBLE CAUSE	CORRECTIVE ACTION
1. Winch will not hoist/pull rated load.	a) Inadequate hydraulic system supply pressure.	a) Install gauges at motor ports to verify hydraulic system supply pressure and correct as required.
	b) Damaged winch motor.	b) Replace or repair winch motor.
	c) Winch centerline is distorted due to uneven mounting surface.	c) Refer to **INSTALLATION INSTRUCTIONS** for proper winch mounting.
	d) Binding load carrying sheaves.	d) Inspect and repair or lubricate sheaves as required.
2. Winch will not turn at rated speed.	a) Inadequate hydraulic system supply volume.	a) Use an in-line flow meter at the motor to verify hydraulic system supply volume and correct as required.
	b) Damaged winch Motor.	b) Replace or repair winch Motor.
	c) Winch centerline is distorted due to uneven mounting surface.	c) Refer to **INSTALLATION INSTRUCTIONS** for proper winch mounting.
	d) Binding load carrying sheaves.	d) Inspect and repair or lubricate sheaves as required.
3. Winch will not hold the load.	a) Wire rope is wound onto the cable drum in the wrong direction.	a) Install wire rope according to **INSTALLATION INSTRUCTIONS**.
	b) Hydraulic system is trapping pressure at external brake release port.	b) Vent the external brake release port to tank when in neutral.
	c) Hydraulic system control valve is equipped with the wrong spool and traps pressure at the motor lowering port when returned to the neutral position.	c) Install a control valve spool that connects both work ports to tank in the neutral position.
	d) Clutch assembly is damaged.	d) Disassemble and inspect the Sprag Clutch, Brake Shaft and Brake Hub according to **SERVICE INSTRUCTIONS**. Replace worn or damaged components.
	e) Brake Friction or Separator Plates are worn or damaged.	e) Disassemble and inspect the Brake Discs and Brake Separators according to **SERVICE INSTRUCTIONS**. Replace as required.
	f) Hydraulic fluid contamination is causing Brake Piston to bind in Primary Base.	f) Disassemble and inspect the bore of the Primary Base for contamination or abrasion damage according to **SERVICE INSTRUCTIONS**. Repair or replace as required.

WINCH TROUBLE SHOOTING (continued)

SYMPTOM	POSSIBLE CAUSE	CORRECTIVE ACTION
4. Winch will not turn in the lowering direction.	a) Inadequate hydraulic system supply pressure.	a) Install gauges at motor ports to verify hydraulic system supply pressure. Correct as required.
	b) Brake release pressure does not develop at Brake Piston due to damaged O-Rings.	b) Disassemble and inspect Brake Piston and Brake Conduit O-Rings according to **SERVICE INSTRUCTIONS**. Replace as required.
	c) Brake release pressure is prevented from reaching Brake Piston due to blocked Brake Conduit.	c) Disassemble and inspect Brake Conduit center bore is clear according to **SERVICE INSTRUCTIONS**. Repair as required.
	d) Damaged winch Motor.	d) Replace or repair winch Motor.
	e) Winch centerline is distorted due to uneven mounting surface.	e) Refer to **INSTALLATION INSTRUCTIONS** for proper winch mounting
5. Winch vibrates when lowering the load.	a) Inadequate hydraulic system supply volume.	a) Use an in-line flow meter at the motor port to verify hydraulic system supply volume is greater than the minimum volume specified in **PERFORMANCE DATA**. Correct as required.
	b) Air in hydraulic fluid.	b) Ensure that the hydraulic fluid is clear. If appearance is milky or cloudy, air is being introduced into the hydraulic system. Diagnose and correct as required.
	c) Cooling oil supply to Brake Discs is blocked by a plugged Brake Piston orifice.	c) Remove Brake Piston and inspect orifice according to **SERVICE INSTRUCTIONS**. Clear if plugged.
	d) Brake Discs or Separators are damaged or worn.	d) Disassemble and inspect the Brake Discs and Separators according to **SERVICE INSTRUCTIONS**. Replace as required.
	e) Clutch assembly is damaged.	e) Disassemble and inspect the Sprag Clutch, Brake Shaft and Brake Hub according to **SERVICE INSTRUCTIONS**. Replace worn or damaged components.

WINCH TROUBLE SHOOTING (continued)

SYMPTOM	POSSIBLE CAUSE	CORRECTIVE ACTION
6. Winch leaks oil.	a) Hydraulic fluid leaks from between the Motor Shaft End Cover and the Primary Base due to a damaged O-ring.	a) Disassemble and inspect the Motor Shaft End Cover O-ring and sealing surfaces according to **SERVICE INSTRUCTIONS**. Replace or repair as required.
	b) Hydraulic fluid leaks from the Motor Gear Housing due to damaged Motor Housing Seal.	b) Disassemble and inspect the Motor Shaft Seals and sealing surfaces according to **SERVICE INSTRUCTIONS**. Replace or repair as required.
	c) Gear lubricating oil leaks from between the Final Base and Cable Drum flange due to a damaged final end Cable Drum Seal.	c) Disassemble and inspect the final end Cable Drum Seal according to **SERVICE INSTRUCTIONS**. Ensure that the sealing surface of the Seal Sleeve is smooth and that the Seal Sleeve connection to the Final Base is intact. Replace seal and repair sealing surface or connection as required.
	d) Gear lubricating oil leaks from the Final Base Relief Valve due to one of the following faults: I) Relief Valve is damaged or blocked open. II) The Brake Shaft Seal is leaking hydraulic fluid into the Cable Drum and relieving through the Relief Valve. Inspect both areas between the Cable Drum flanges and Bases for oil leakage resulting from damaged Cable Drum Seals.	d) I) Remove and inspect Relief Valve. Clear any contamination or replace Valve as required. II) The Cable Drum cavity fills with hydraulic system fluid if the Brake Shaft Seal has failed. If this occurs, disassemble and inspect the Brake Shaft Seal according to **SERVICE INSTRUCTIONS**. Replace as required. If damaged, replace Cable Drum Seals also.
	e) Gear lubricating oil leaks from between the Primary Base and Cable Drum flange due to a damaged primary end Cable Drum Seal or Bearing Holder O-ring.	e) Disassemble and inspect the primary end Cable Drum Seal and Bearing Holder O-ring according to **SERVICE INSTRUCTIONS**. Inspect the corresponding sealing surfaces. Ensure that the Seal Sleeve connection to the Primary Base is intact. Replace seal, repair sealing surface or connection as required.

GENERAL SERVICE INSTRUCTIONS

- **INTRODUCTION**

Rotzler Titan winches are designed for easy field repair. If a fault is isolated to one of the three major assemblies, that assembly can be immediately replaced in its entirety and the failed assembly repaired when time permits or returned for factory service.

Perform service of internal components in a clean, well lit, shop area. Discard all O-Rings and Shaft Seals when servicing the winch. Do not attempt to re-use seals.

- **SERVICING CRITICAL COMPONENTS**

Due to their important function, several internal components are identified as CRITICAL COMPONENTS. CRITICAL COMPONENTS are tracked by the winch Serial Number located on the Final Base Identification Label.

Return Fax forms are provided when CRITICAL COMPONENTS are supplied as spare parts. Return this form to Rotzler Inc. when a CRITICAL COMPONENT is replaced and the manufacturing records for that winch Serial Number will be updated and the component history maintained. This service is offered to protect the end user and participation is left to the discretion of the end user.

- **SERVICE RECORDS**

Maintain a winch Service Log, identifying Serial Number, service performed, preventive maintenance and service dates.

- **ADHESIVE PROCEDURE**

Adhesive technology is used throughout Titan winches to structurally secure fasteners and other components. Cleanliness is critical for the successful application of adhesives. Oily contamination from a dirty work area, tools or hands will reduce the strength of adhesive bonds.

SECURING FASTENERS WITH ADHESIVES

1. Use Loctite #262 Threadlocker to secure fasteners.
2. Ensure that fasteners and threaded holes are clean and dry.
3. Apply a bead of Threadlocker axially along the bottom portion of the screw thread that will engage the female thread. Use a single bead approximately 1/8-3/16” [3-5mm] in diameter, depending on screw size.
4. Initially, install screws only finger tight. When a tightening sequence is required, the specified tightening order assumes that the screws are numbered in sequence around the bolt pattern. Screws are then tightened according to the defined order.
5. Wipe away excess Threadlocker.
6. Allow 24 hours for adhesive to cure before applying full service load.
7. Although considered to be a permanent bond, screws can be readily removed using normal hand tools.

SECURING BEARINGS WITH ADHESIVES

1. Use Loctite #648 Retaining Compound to secure bearings as required.
2. Ensure that the bearing and the machined bore are clean and dry.
3. Apply a single bead of Retaining Compound approximately 1/8” [3mm] in diameter around the inside perimeter of the bearing bore. Locate this bead at approximately the same distance from the bottom step as the bearing width.
4. Push bearing into bore until it rests against stop.
5. Wipe away excess compound.
6. Allow 24 hours for adhesive to cure before applying full service load.
7. Although considered to be a permanent bond, bearings can be removed using normal hand tools.

SERVICE INSTRUCTIONS

REFER TO ROTZLER INC. FOR:

- **DISASSEMBLY INSTRUCTIONS**
- **ASSEMBLY INSTRUCTIONS**
- **SPECIAL INSTRUCTIONS – REVERSING DIRECTION OF ROTATION**

SPECIAL INSTRUCTIONS - STAINLESS STEEL SCREWS

- **GENERAL INFORMATION**

Standard Rotzler Titan TC series winches are equipped with plated alloy steel screws. Stainless steel screws are optionally available for use in highly corrosive environments. The stainless screw option consists of replacement Stainless Steel Screws for the winch as indicated in the **ASSEMBLY DRAWINGS.** Stainless steel screws are identified with “A4” on the head of the screw.

7. ORDERING

TECHNICAL INFORMATION

An Identification Label is located on the outside of the Final Base and identifies the winch model and serial numbers. Record the numbers below and retain for future reference:

MODEL: _____
SERIAL NUMBER: _____

The Identification Label must not be removed, altered or have its technical data obscured. If the data becomes difficult to read, contact Rotzler Inc. for a replacement Label.

SEAL AND SERVICE KITS

It is recommended that Winch and Motor Seal (or Service) Kits be available before beginning service as follows:

- **#4000006131 (22C-093), TC2 WINCH SEAL KIT** (contains seals as indicated in **ASSEMBLY DRAWINGS**)
- **#4000006130 (22C-086), TC2 WINCH SERVICE KIT** (contains Loctite adhesives in addition to the seals contained in the Seal Kit)
- **#4000005999 (220-094K), 511 MOTOR SEAL KIT** (contains seals as indicated in **MOTOR ASSEMBLY DRAWINGS**)
- **#4000005987 (220-080K), 511 MOTOR SERVICE KIT** (contains Loctite adhesives in addition to the seals contained in the Seal Kit)

ORDERING REPLACEMENT COMPONENTS

When ordering replacement components for the winch or when making technical inquiries, refer to the Model and Serial Number listed on the winch Identification Label.

The winch model number does not distinguish what types of screws are installed on the winch. When ordering parts, it is therefore important to specify what type of screws is required.

WINCH DRAWING

#EW.TC2 REV D

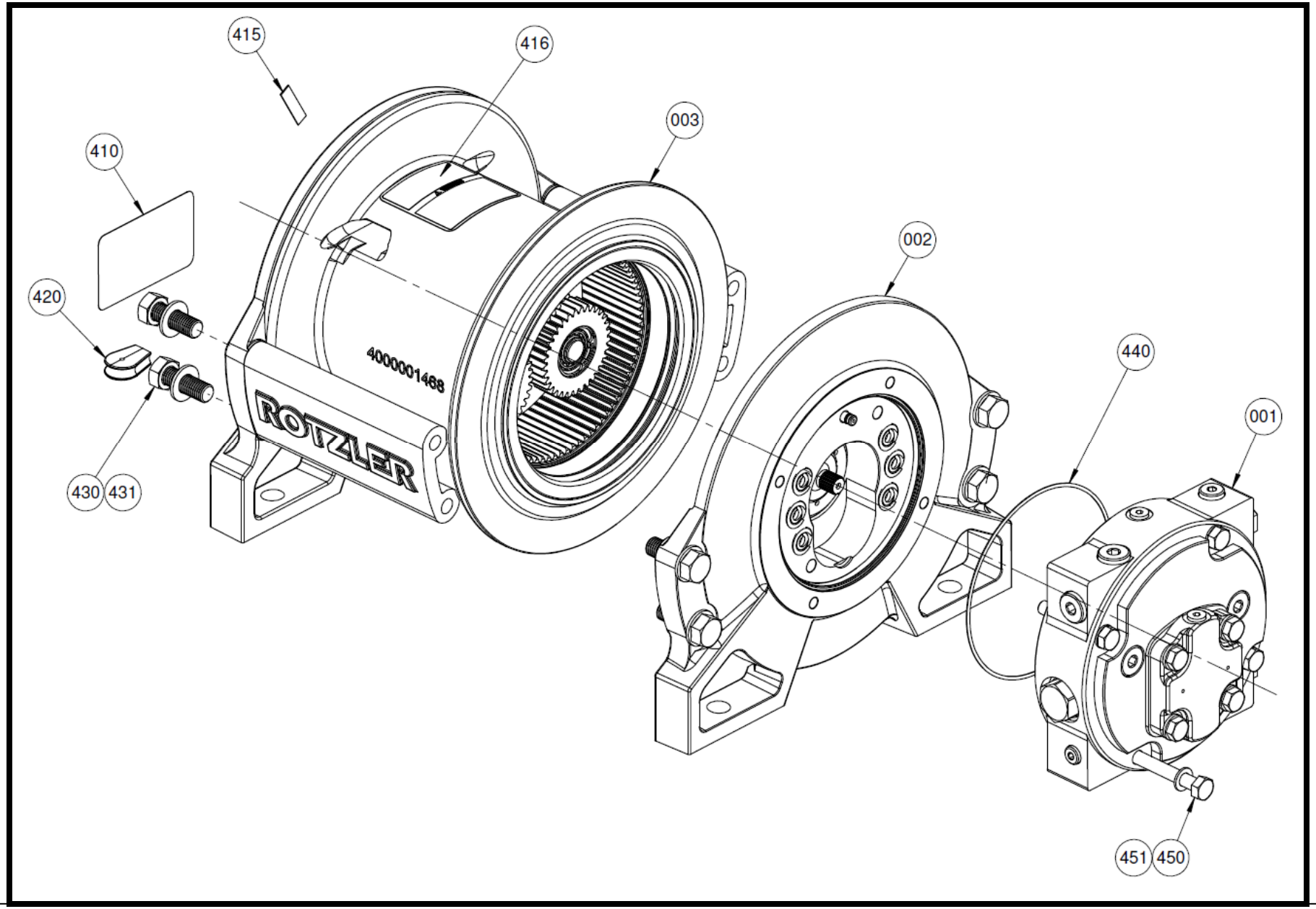

WINCH COMPONENT LIST

#EW.TC2 REV D

REF.	NEW PART #	QTY	DESCRIPTION	OLD PART #	STAINLESS STEEL SCREW OPTION	
001	See table 1	1	Assembly, Motor, 511-XX, XX	See table 1		
002	See table 1	1	Assembly, Primary, TC2	See table 1	NEW PART #	OLD PART #
003	N/A	1	Assembly, Final, TC2	F.TC2		
004	N/A	1	Assembly, Hardware, TC2. Includes:	H.TC2		
410	400 000 0701	1	Label, Identification	220-065		
415	400 000 0702	1	Label, Number	220-077		
416	400 000 0703	1	Label, Rotation, CC - counter clockwise hoisting	220-078		
	400 000 0704	1	Label, Rotation, CW - clockwise hoisting	220-079		
420	926 062 4000	1	Cable Wedge, 0.44"	220-067		
430	001 571 0000	8	Screw, Hex-Hd Cap, M14-2.00x40mm, DIN 933, Gr.8.8, Plated	220-062	001 571 0020	220-098
431	400 000 5915	8	Washer, M14, DIN 433, Plated	220-022	400 000 6006	220-099
* 440	927 146 4000	1	Seal, O-ring, #2-162	22C-044		
450	See table 1	4	Screw, Hex-Hd Cap, M10-1.50, DIN 931, Gr.8.8, Plated	See table 1	See table 1	See table 1
451	400 000 0707	4	Washer, M10, DIN 433, Plated	220-029	001 773 0020	220-101

* TC2 Winch Seal Kit #4000006131 (22C-093), and TC2 Winch Service Kit #4000006130 (22C-086) include item #440.

TABLE 1

VARIANCE	REF 001		REF 002		REF 450		REF 450-SS	
	New Part #	Old Part #	New Part #	Old Part #	New Part #	Old Part #	New Part #	Old Part #
CC hoisting, -31 motor	400 000 6363	M.TC2.CC.31.0	-	P.TC2.CC.0	400 000 6115	22C-028, 65mm	400 000 6132	22C-102
CW hoisting, -31 motor	-	M.TC2.CW.31.0	-	P.TC2.CW.0	400 000 6115	22C-028, 65mm	400 000 6132	22C-102
CC hoisting, -16 motor	400 000 6362	M.TC2.CC.16.0	-	P.TC2.CC.0	001 611 0000	21C-028, 50mm	001 611 0020	21C-102
CW hoisting, -16 motor	-	M.TC2.CW.16.0	-	P.TC2.CW.0	001 611 0000	21C-028, 50mm	001 611 0020	21C-102

NOTE: The winch model number is located on the Identification label #410 and identifies rotation code (CC, CW) and motor code.

511-31 STANDARD MOTOR ASSEMBLY DRAWING

#EM.TC2.**.31.* REV F

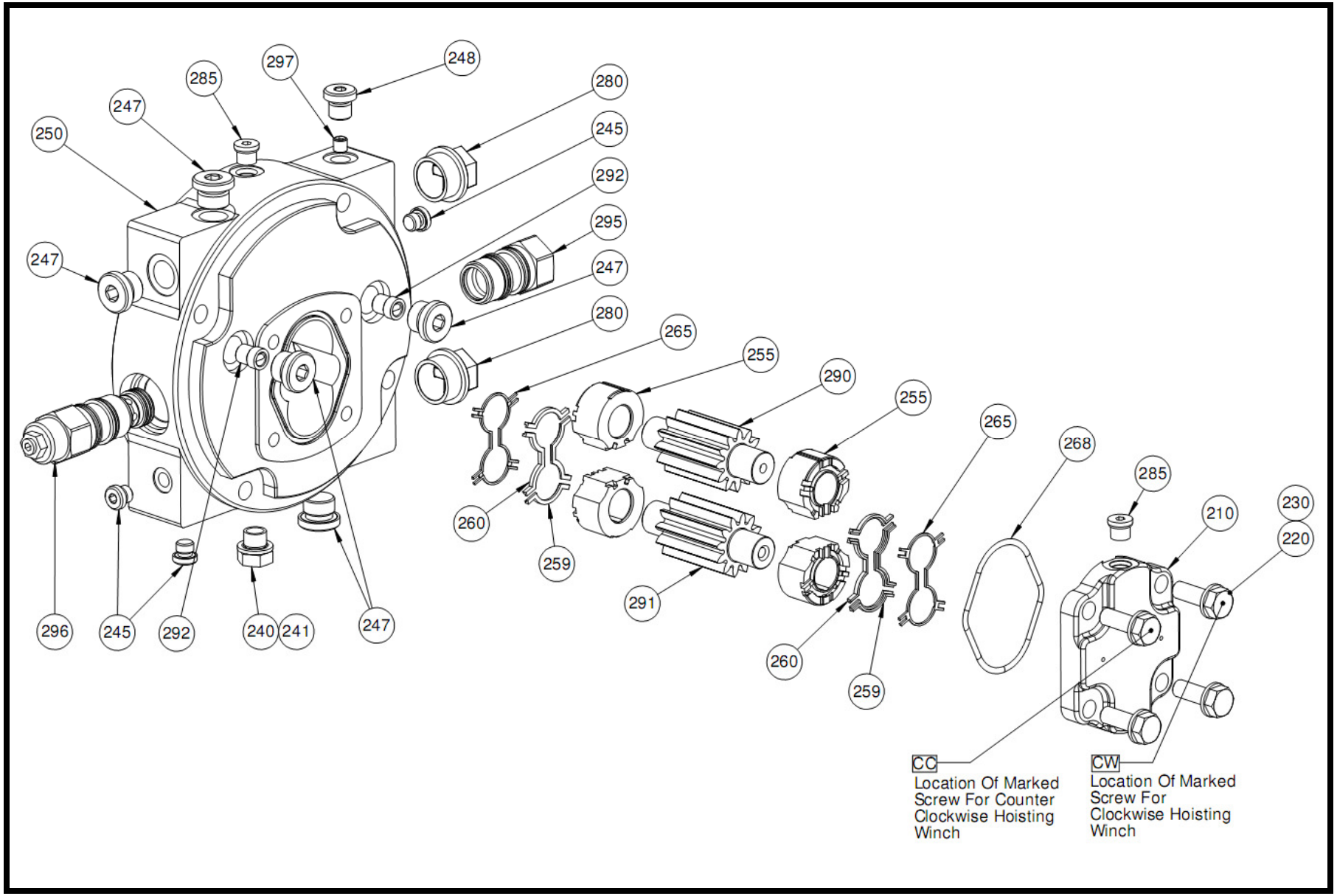

511-31 STANDARD MOTOR COMPONENT LIST

#EM.TC2.**.31.* REV F

	REF	QTY	NEW PART #	DESCRIPTION	OLD PART #
	210	1	926 419 3001	Motor Cover, Port End, M11C	22C-019M
	220	4	001 540 0000	Screw, Hex Hd Cap, M10-1.50x30mm, Steel, Gr.8.8, Plated, DIN 933	210-062
	230	4	400 000 0707	Washer, M10, Steel, Plated, DIN 433, PH #391 3782 245	220-029
	240	1	400 000 6152	Fitting, Plug, BSPP-1/4	22C-166
	241	1	400 000 0666	Fitting, Seal Ring, BSPP-1/4	22C-167
	245	3	003 213 0000	Fitting, Plug, Metric, M10x1.0, E Seal, Adaptall # 9029-10x1.0	22C-153
	247	5	003 212 0000	Fitting, Plug, Metric, M18x1.5, E Seal, Adaptall # 9029-18x1.5	22C-152
	248	1	400 000 6144	Fitting, Plug, BSPP, G1/4, E Seal, Adaptall # 9028-04	22C-151
	250	1	927 218 0001	Motor Housing, M/C, 511C-31R	N/A
*	255	4	927 239 4001	Motor Bushing, Thrustblock, 511, PH #8301 207 00L	220-020K
*	259	4	927 430 4000	Motor, Seal, Channel, Top, 511, PH #8301 016 0B9	220-052K
*	260	4	927 429 4000	Motor, Seal, Channel, Side, 511, PH #8301 016 0AB	220-053K
*	265	2	927 428 4000	Motor, Seal, Backup, 511, PH #8301 015 006	220-055K
*	268	1	926 414 4001	Motor Seal, Section, 511, PH #9313 145 00B	220-056K
	280	2	400 000 1584	Fitting, Plug, Plastic, BSPP-3/4, Niagara #BT-0750	22C-071
	285	2	927 221 4000	Fitting, Plug, SAE #4, Airway #6409-4	220-072
	290	1	400 000 6113	Motor Gear, Drive, 511C-31, PH #334 2631 000	22C-021KA
	291	1	400 000 6114	Motor Gear, Driven, 511C-31, PH #334 2731 000	22C-021KB
	292	2	927 220 4000	Valve, Check, M330, PH #391 3681 001	230-126
	295	1	N/A	Depends on Variance	See Table 1
	296	1	N/A	Depends on Variance	See Table 1
	297	1	N/A	Depends on Variance	See Table 1

TABLE 1

VARIANCE	MOTOR	REF 295	REF 296	REF 297
Counter clockwise hoisting	M.TC2CC310	400 000 6151 (22C-164)	927 145 4000 (22C-161)	013 111 0000
Clockwise hoisting	M.TC2CW310	927 145 4000 (22C-161)	927 145 4000 (22C-161)	Not required
Counter CW hoisting, CB Valve	M.TC2CC31V	400 000 6151 (22C-164)	927 141 4000 (22C-160)	013 111 0000
Clockwise hoisting, CB Valve	M.TC2CW31V	927 141 4000 (22C-160)	927 145 4000 (22C-161)	Not required

927 141 4000 (22C-160)	Valve, Counterbalance, Sun #CBDL-LJN
927 145 4000 (22C-161)	Fitting, Plug, T-2A Cavity, Sun #XBOA-XXN
400 000 6151 (22C-164)	Fitting, Plug, T-2A Cav, Mod
013 111 0000	Fitting, Plug,Metric, M8x1.00, Taper Pipe, DIN906

* 511C Motor Seal Kit #4000005999 (220-094K) includes #255, #259, #260, #265 and #268

Weight: 15.2 lbs

PRIMARY ASSEMBLY DRAWING

#EP.TC2 REV D

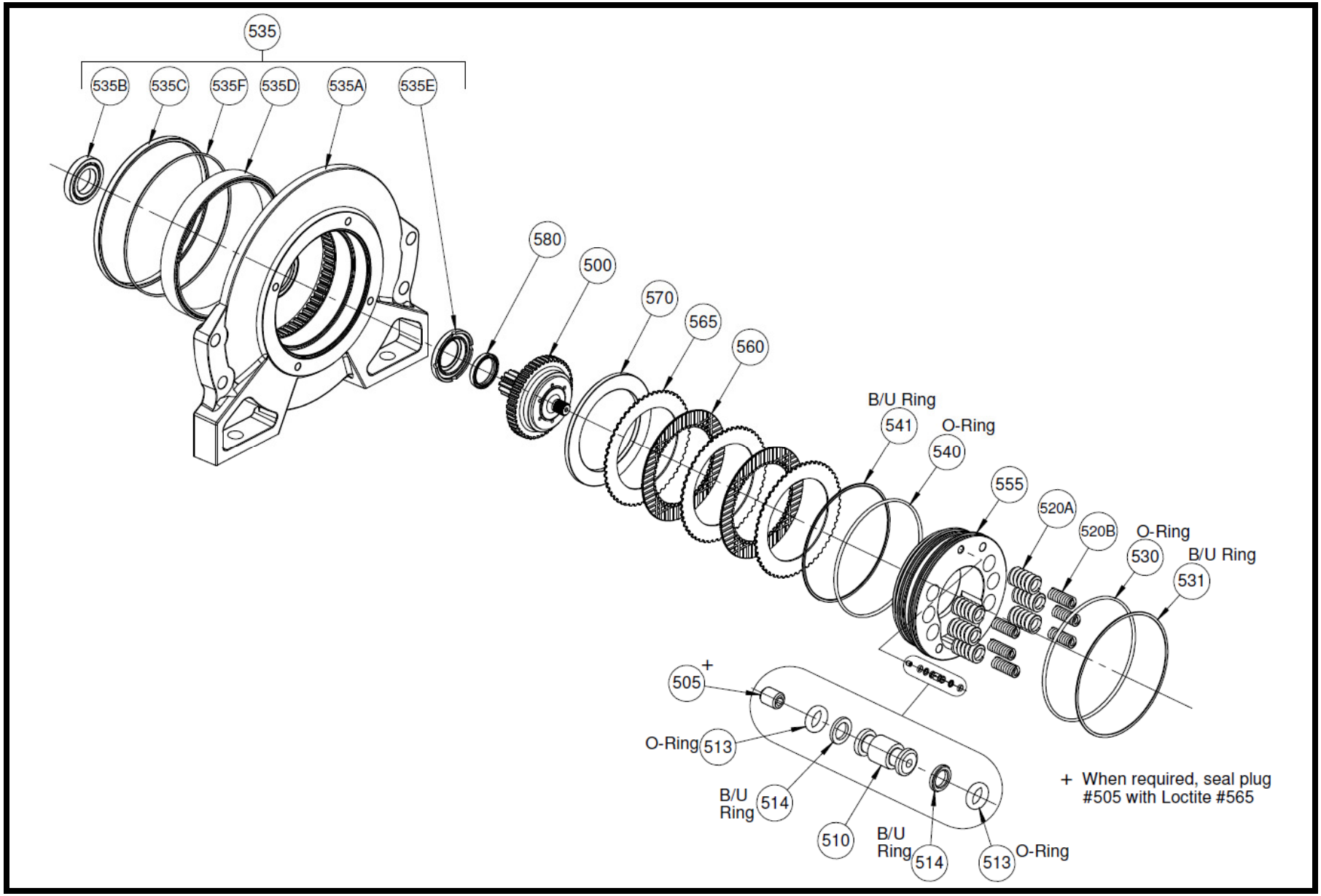

PRIMARY COMPONENT LIST

#EP.TC2 REV D

	PRIMARY COMPONENT LIST				EP.TC1
	REF.	NEW PART #	QTY	DESCRIPTION	OLD PART #
	500	See table 1	1	Assembly, Clutch, TC2	See table 1
	505	See table 1	1	Screw, Hex Skt Set, #10-32 UNFx.25, steel	See table 1
	510	400 000 0714	1	Brake Conduit	220-045
*	513	400 000 0715	2	Seal, O-Ring, #2-008	220-047
*	514	400 000 0716	2	Seal, Backup Ring, #8-008	220-048
	520A	927 149 4001	6	Outer Spring, .148 x .863	21C-016
	520B	927 149 4002	6	Inner Spring, .105 x .527	22C-126
*	530	927 147 4000	1	Seal, O-ring, #2-254	22C-043
*	531	927 148 4000	1	Seal, Backup Ring, #8-254	22C-042
	535	-	1	Base, Primary, Assembled, TC2. Includes:	22C-076
	535A	927 155 1000	1	Base, Primary, TC2	22C-PP2G
	535B	001 037 0000	1	Bearing, Ball, #16006	22C-066
	535C	927 151 4000	1	Sleeve, Rotary Shaft Seal, TC2	22C-058
	535D	917 740 4002	1	Bearing, KMF #KKS 1309	22C-059
	535E	927 152 4000	1	Base, Primary, Insert, TC2	22C-082
	535F	012 860 0000	1	Seal, O-ring, #2-165	220-064
*	540	010 472 0000	1	Seal, O-ring, #2-252	22C-041
*	541	927 148 4001	1	Seal, Backup Ring, #8-252	22C-040
	555	400 000 6101	1	Brake Piston, TC2	22C-011
	560	926 382 4000	2	Brake Disc, TH2	220-039
	565	926 381 4000	3	Brake Separator, TH2	220-038
	570	926 380 4000	1	Brake Locator, TH2	220-015
*	580	926 425 4000	1	Seal, Brake Shaft, 1.25"	220-035

When sold separately, Primary Assembly is supplied with:
- 4000006343 (#800-008) Shipping Plate
- 4000006078 (#220-173) (x3) screw
- 4000000707 (220-068) (x2) washer

(Brake Shaft is secured with x1 screw installed with Loctite #262)

NOTE: The winch model number is located on the Final Base Identification label and identifies rotation code (CC, CW).

TABLE 1	VARIANCE	Primary Assembly		REF 500		REF 505	
		New Part #	Old Part #	New Part #	Old Part #	New Part #	Old Part #
	CC hoisting	-	P.TC2.CC.0	927 140 3000	C.TC2.CC	Not Required	
	CW hoisting	-	P.TC2.CW.0	927 140 3001	C.TC2.CW	Not Required	
	CC hoisting, with CB valve	927 124 2002	P.TC2.CC.VP	927 140 3000	C.TC2.CC	927 153 4000	22C-165
	CW hoisting, with CB valve	927 124 2003	P.TC2.CW.VP	927 140 3001	C.TC2.CW	927 153 4000	22C-165

* TC2 Winch Seal Kit #4000006131 (#22C-093) includes #513 (x2), #514 (x2), #530, #531, #540, #541, and #580.

CLUTCH ASSEMBLY DRAWING

#EC.TC2 REV C

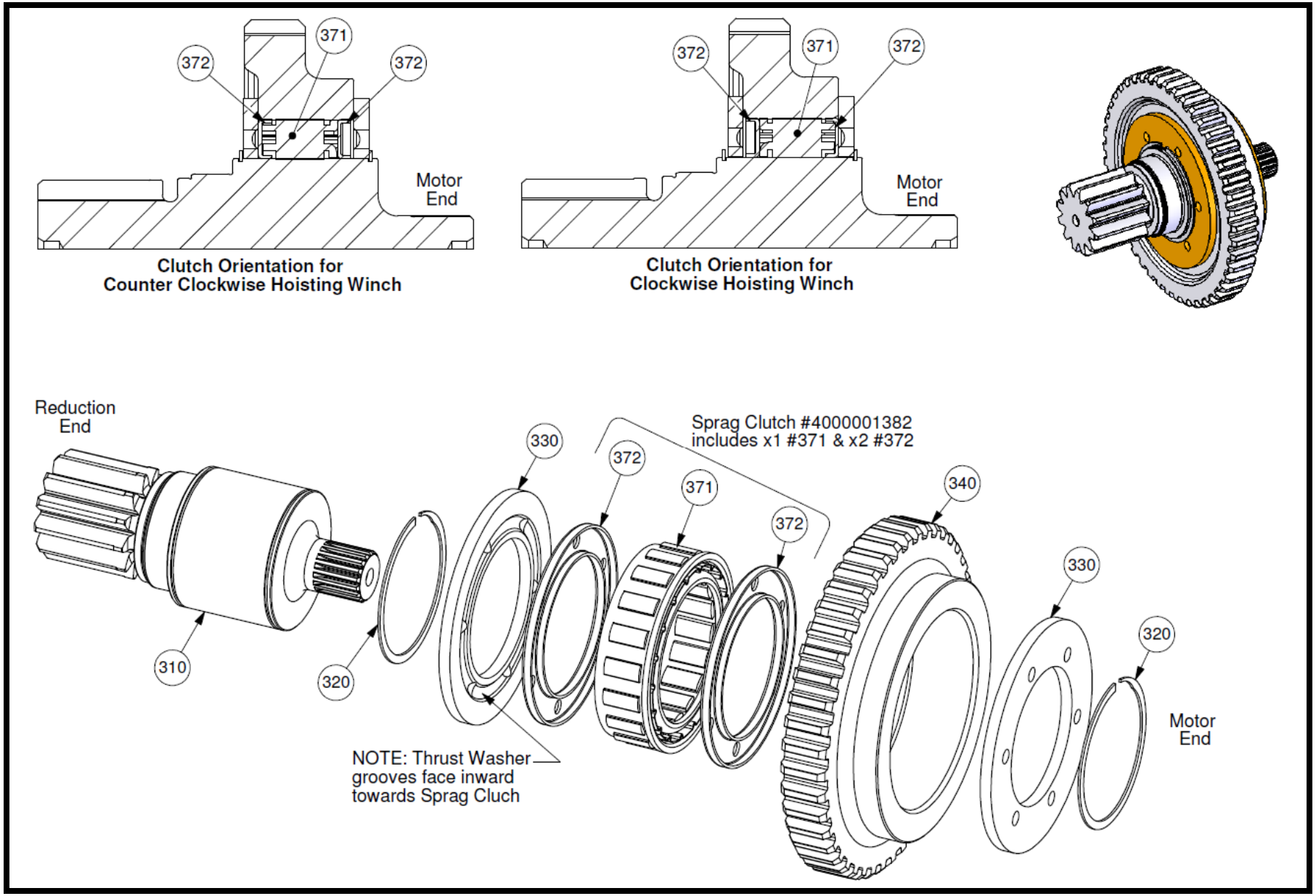

CLUTCH COMPONENT LIST

#EC.TC2 REV C

New Part # for C.TC2.CC is 927 140 3000
New Part # for C.TC2.CW is 927 140 3001

WEIGHT: 2.60 lbs

	REF.	NEW PART #	QTY.	DESCRIPTION	OLD PART #
*	310	400 000 1386	1	Brake Shaft, TC2	22C-014
	320	400 000 0708	2	Retainer, Spiralox #US-150	220-046
	330	400 000 0709	2	Brake Clutch Thrust Washer	220-036
*	340	400 000 1389	1	Brake Hub, 0.91"	220-010
*	371	400 000 0711	1	Brake Sprag Clutch Cage	220-124
	372	400 000 0712	2	Brake Sprag Clutch End Bearing	220-125

* Refer to SERVICING CRITICAL COMPONENTS for special instructions.

FINAL ASSEMBLY DRAWING

#EF.TC2 REV D

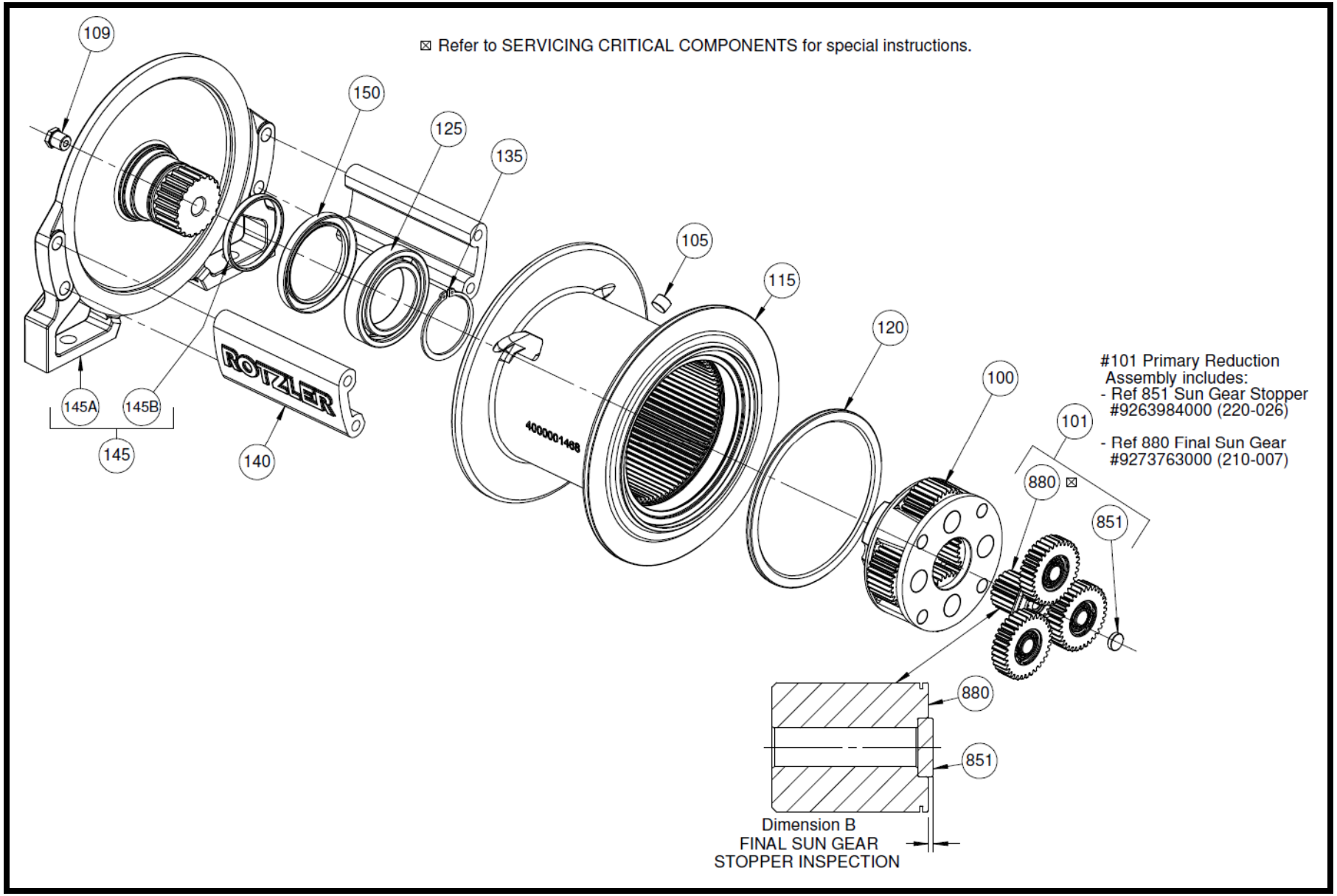

FINAL ASSEMBLY COMPONENT LIST

#EF.TC2 REV D

FINAL ASSEMBLY COMPONENT LIST					EF.TC2
	REF.	NEW PART #	QTY	DESCRIPTION	OLD PART #
	100	927 122 4000	1	Assembly, Reduction, Final, TC2	RF.TC2
	101	927 123 4000	1	Assembly, Reduction, Primary, TC2	RP.TC2
	105	926 064 4000	1	Fitting, Plug, Pipe, 3/8, SS 316, Seaway #D432	220-134
	109	926 063 4000	1	Valve, Relief	220-063
	115	400 000 6103	1	Cable Drum, TC2	22C-013G
*	120	927 118 4000	1	Seal, Rotary Shaft, DIN 3760, WA Style, 200x180x7 mm	22C-060
	125	012 862 0000	1	Bearing, Ball, SKF #6014	220-059
	135	007 936 0000	1	Retainer, DIN 471, American Ring #471-0700	22C-031
	140	925 903 3001	2	Spacer Bar, TH2	220-030M
	145	400 000 5980	1	Base, Final, Assembled, TH2. Includes:	220-074
	145A	925 569 1011	1	Base, Final, TH2	220-001G
	145B	926 410 4000	1	Sleeve, Rotary Shaft Seal, TH2	220-058
*	150	012 861 0000	1	Seal, Rotary Shaft, DIN 3760, WA Style, 85X110X12 mm	220-060

* TC2 Winch Seal Kit #4000006131 (#22C-093), and TC2 Winch Service Kit ##4000006130 (22C-086) include item #120 and #150.

ROTZLER INC.
Unit 122, 7350 – 72 Street
Delta, British Columbia, Canada V4G 1H9
PH: (604) 940-7134 • FX: (604) 940-7135
Website: www.rotzler.com
Email: rotzlercanada@rotzler.de

PRINTED IN CANADA