Public Works and Government Services Canada | Travaux publics et Services gouvernementaux Canada

RETURN BIDS TO:
RETOURNER LES SOUMISSIONS À:

Réception des soumissions - TPSGC / Bid Receiving - PWGSC
1550, Avenue d'Estimauville
1550, D'Estimauville Avenue
Québec
Québec
G1J 0C7
FAX pour soumissions: (418) 648-2209

REQUEST FOR PROPOSAL
DEMANDE DE PROPOSITION

Proposal To: Public Works and Government Services Canada

We hereby offer to sell to Her Majesty the Queen in right of Canada, in accordance with the terms and conditions set out herein, referred to herein or attached hereto, the goods, services, and construction listed herein and on any attached sheets at the price(s) set out therefor.

Proposition aux: Travaux Publics et Services Gouvernementaux Canada

Nous offrons par la présente de vendre à Sa Majesté la Reine du chef du Canada, aux conditions énoncées ou incluses par référence dans la présente et aux annexes ci-jointes, les biens, services et construction énumérés ici sur toute feuille ci-annexée, au(x) prix indiqué(s).

Comments - Commentaires

Title - Sujet
Design and Fabr. Composite Shelters

Solicitation No. - N° de l'invitation	**Date**
EF928-190384/C	2019-11-12

Client Reference No. - N° de référence du client

GETS Reference No. - N° de référence de SEAG
PW-$QCN-039-17799

File No. - N° de dossier	**CCC No./N° CCC - FMS No./N° VME**
QCN-8-41214 (039)	

Solicitation Closes - L'invitation prend fin
at - à 02:00 PM
on - le 2019-12-23

Time Zone
Fuseau horaire
Heure Normale du l'Est
HNE

F.O.B. - F.A.B.
Plant-Usine: ☐ **Destination:** ☑ **Other-Autre:** ☐

Address Enquiries to: - Adresser toutes questions à:	**Buyer Id - Id de l'acheteur**
Boisclair, Daniel	qcn039

Telephone No. - N° de téléphone	**FAX No. - N° de FAX**
(418) 649-2831 ( )	(418) 648-2209

Destination - of Goods, Services, and Construction:
Destination - des biens, services et construction:
MINISTERE DES TRAVAUX PUBLICS ET SERVICES GOUVERNEMENTAUX CANADA
PL.BONAVENTURE,PORTAIL S-E,BUR.7300
800 RUE DE LA GAUCHETIERE O., 7300.
MONTREAL
Québec
H5A1L6
Canada

Instructions: See Herein

Instructions: Voir aux présentes

Vendor/Firm Name and Address
Raison sociale et adresse du fournisseur/de l'entrepreneur

Delivery Required - Livraison exigée	**Delivery Offered - Livraison proposée**
Voir Doc.	

Vendor/Firm Name and Address
Raison sociale et adresse du fournisseur/de l'entrepreneur

Telephone No. - N° de téléphone
Facsimile No. - N° de télécopieur

Name and title of person authorized to sign on behalf of Vendor/Firm (type or print)
Nom et titre de la personne autorisée à signer au nom du fournisseur/ de l'entrepreneur (taper ou écrire en caractères d'imprimerie)

Signature **Date**

Issuing Office - Bureau de distribution
TPSGC/PWGSC
601-1550, Avenue d'Estimauville
Québec
Québec
G1J 0C7

Canada

This Request for Proposal cancels and supersedes previous Request for Proposal number EF928-190384/B dated 2019-07-18 with a closing of 2019-08-30 at 2.00 PM EDT.

TABLE OF CONTENTS

PART 1 - GENERAL INFORMATION

1.1 Statement of Requirement

The requirement is detailed under Article 6.2 of the **resulting contract clauses**.

1.2 Debriefings

Bidders may request a debriefing on the results of the bid solicitation process. Bidders should make the request to the Contracting Authority within 15 working days from receipt of the results of the bid solicitation process. The debriefing may be in writing, by telephone or in person.

1.3 Trade Agreements

The requirement is subject to the provisions of the World Trade Organization Agreement on Government Procurement (WTO-AGP), the North American Free Trade Agreement (NAFTA), the Canada-European Union Comprehensive Economic and Trade Agreement (CETA), and the Canadian Free Trade Agreement (CFTA).

1.4 epost Connect service

This bid solicitation allows bidders to use the epost Connect service provided by Canada Post Corporation to transmit their bid electronically. Bidders must refer to Part 2 entitled Bidder Instructions, and Part 3 entitled Bid Preparation Instructions, of the bid solicitation, for further information.

PART 2 - BIDDER INSTRUCTIONS

2.1 Standard Instructions, Clauses and Conditions

The 2003 standard instructions is amended as follows:

- Section 08, entitled Transmission by facsimile or by epost Connect, is amended as follows: subsection 2. is deleted entirely and replaced with the following:

2. epost Connect

a. Unless specified otherwise in the bid solicitation, bids may be submitted by using the epost Connect service provided by Canada Post Corporation.

i. PWGSC regional offices: The only acceptable email address to use with epost Connect for responses to bid solicitations issued by PWGSC regional offices is identified in the bid solicitation.

b. To submit a bid using epost Connect service, the Bidder must either:

i. send directly its bid only to the specified PWGSC Bid Receiving Unit, using its own licensing agreement for epost Connect provided by Canada Post Corporation; or

ii. send as early as possible, and in any case, at least six business days prior to the solicitation closing date and time, (in order to ensure a response), an email that includes the bid solicitation number to the specified PWGSC Bid Receiving Unit requesting to open an epost Connect conversation. Requests to open an epost Connect conversation received after that time may not be answered.

c. If the Bidder sends an email requesting epost Connect service to the specified Bid Receiving Unit in the bid solicitation, an officer of the Bid Receiving Unit will then initiate an epost Connect conversation. The epost Connect conversation will create an email notification from Canada Post Corporation prompting the Bidder to access and action the message within the conversation. The Bidder will then be able to transmit its bid afterward at any time prior to the solicitation closing date and time.

d. If the Bidder is using its own licensing agreement to send its bid, the Bidder must keep the epost Connect conversation open until at least 30 business days after the solicitation closing date and time.

e. The bid solicitation number should be identified in the epost Connect message field of all electronic transfers.

f. It should be noted that the use of epost Connect service requires a Canadian mailing address. Should a bidder not have a Canadian mailing address, they may use the Bid Receiving Unit address specified in the solicitation in order to register for the epost Connect service.

g. For bids transmitted by epost Connect service, Canada will not be responsible for any failure attributable to the transmission or receipt of the bid including, but not limited to, the following:

i. receipt of a garbled, corrupted or incomplete bid;
ii. availability or condition of the epost Connect service;
iii. incompatibility between the sending and receiving equipment;
iv. delay in transmission or receipt of the bid;
v. failure of the Bidder to properly identify the bid;
vi. illegibility of the bid;
vii. security of bid data; or,
viii. inability to create an electronic conversation through the epost Connect service.

h. The Bid Receiving Unit will send an acknowledgement of the receipt of bid document(s) via the epost Connect conversation, regardless of whether the conversation was initiated by the supplier using its own license or the Bid Receiving Unit. This acknowledgement will confirm only the receipt of bid document(s) and will not confirm if the attachments may be opened nor if the content is readable.
i. Bidders must ensure that that they are using the correct email address for the Bid Receiving Unit when initiating a conversation in epost Connect or communicating with the Bid Receiving Unit and should not rely on the accuracy of copying and pasting the email address into the epost Connect system.
j. A bid transmitted by epost Connect service constitutes the formal bid of the Bidder and must be submitted in accordance with section 05.

All instructions, clauses and conditions identified in the bid solicitation by number, date and title are set out in the Standard Acquisition Clauses and Conditions Manual (https://buyandsell.gc.ca/policy-and-guidelines/standard-acquisition-clauses-and-conditions-manual) issued by Public Works and Government Services Canada.

Bidders who submit a bid agree to be bound by the instructions, clauses and conditions of the bid solicitation and accept the clauses and conditions of the resulting contract.

The 2003 (2018-05-22) Standard Instructions - Goods or Services - Competitive Requirements, are incorporated by reference into and form part of the bid solicitation.

Subsection 5.4 of 2003, Standard Instructions - Goods or Services - Competitive Requirements, is amended as follows:

Delete: 60 days
Insert: 90 days

2.1.1 *SACC Manual* Clauses

B1000T (2014-06-26) Condition of Material - Bid

2.2 Submission of Bids

Bids must be submitted only to Public Works and Government Services Canada (PWGSC) Bid Receiving Unit by the date, time and place indicated in the bid solicitation.

2.2.1 By using the epost Connect service provided by Canada Post Corporation (https://www.canadapost.ca/web/en/products/details.page?article=epost_connect_send_a)
The email address of PWGSC Quebec region Bid Receiving Unit is:
TPSGC.RQReceptionSoumissions-QRSupplyTendersReception.PWGSC@tpsgc-pwgsc.gc.ca

Note: Bids will not be accepted if emailed directly to this email address. This email address is to be used to open an epost Connect conversation, as detailed in Standard Instructions 2003, or to send bids through an epost Connect message if the bidder is using its own licensing agreement for epost Connect.

2.2.2 Tenders can also be transmitted by fax to **418-648-2209**

By mail or in person at:
Public Works and Government Services Canada (PWGSC)
1550, Avenue of Estimauville
Quebec City, (Quebec)
G1J 0C7

2.3 Enquiries - Bid Solicitation

All enquiries must be submitted in writing to the Contracting Authority no later than seven (7) calendar days before the bid closing date. Enquiries received after that time may not be answered.

Bidders should reference as accurately as possible the numbered item of the bid solicitation to which the enquiry relates. Care should be taken by Bidders to explain each question in sufficient detail in order to enable Canada to provide an accurate answer. Technical enquiries that are of a proprietary nature must be clearly marked "proprietary" at each relevant item. Items identified as "proprietary" will be treated as such except where Canada determines that the enquiry is not of a proprietary nature. Canada may edit the question(s) or may request that the Bidder do so, so that the proprietary nature of the question(s) is eliminated, and the enquiry can be answered to all Bidders. Enquiries not submitted in a form that can be distributed to all Bidders may not be answered by Canada.

2.4 Applicable Laws

Any resulting contract must be interpreted and governed, and the relations between the parties determined, by the laws in force in Quebec.

Bidders may, at their discretion, substitute the applicable laws of a Canadian province or territory of their choice without affecting the validity of their bid, by deleting the name of the Canadian province or territory specified and inserting the name of the Canadian province or territory of their choice. If no change is made, it acknowledges that the applicable laws specified are acceptable to the Bidders.

PART 3 - BID PREPARATION INSTRUCTIONS

3.1 Bid Preparation Instructions

If the Bidder chooses to submit its bid electronically, Canada requests that the Bidder submits its bid in accordance with section 08 of the 2003 standard instructions. The epost Connect system has a limit of 1GB per single message posted and a limit of 20GB per conversation.

The bid must be gathered per section and separated as follows:

Section I: Technical Bid
Section II: Financial Bid
Section III: Certifications

If the Bidder chooses to submit its bid in hard copies, Canada requests that the Bidder submits its bid in separately bound sections as follows:

Section I: Technical Bid (Two (2) hard copies)

Section II: Financial Bid (One (1) hard copy)

Section III: Certifications (One (1) hard copy)

If there is a discrepancy between the wording of the soft copy on electronic media and the hard copy, the wording of the hard copy will have priority over the wording of the soft copy.

If the Bidder is simultaneously providing copies of its bid using multiple acceptable delivery methods, and if there is a discrepancy between the wording of any of these copies and the electronic copy provided through epost Connect service, the wording of the electronic copy provided through epost Connect service will have priority over the wording of the other copies.

Prices must appear in the financial bid only. No prices must be indicated in any other section of the bid.

Canada requests that bidders follow the format instructions described below in the preparation of hard copy of their bid:

(a) use 8.5 x 11 inch (216 mm x 279 mm) paper;
(b) use a numbering system that corresponds to the bid solicitation.

In April 2006, Canada issued a policy directing federal departments and agencies to take the necessary steps to incorporate environmental considerations into the procurement process Policy on Green Procurement (https://www.tbs-sct.gc.ca/pol/doc-eng.aspx?id=32573). To assist Canada in reaching its objectives, bidders should:

1) use 8.5 x 11 inch (216 mm x 279 mm) paper containing fibre certified as originating from a sustainably-managed forest and containing minimum 30% recycled content; and

2) use an environmentally-preferable format including black and white printing instead of colour printing, printing double sided/duplex, using staples or clips instead of cerlox, duotangs or binders.

Section I: Technical Bid

In their technical bid, Bidders should explain and demonstrate how they propose to meet the requirements and how they will carry out the Work.

Section II: Financial Bid

Bidders must submit their financial bid in accordance with the Basis of Payment.

3.1.1 Exchange Rate Fluctuation

C3011T (2013-11-06),Exchange Rate Fluctuation

Section III: Certifications

Bidders must submit the certifications and additional information required under Part 5.

PART 4 - EVALUATION PROCEDURES AND BASIS OF SELECTION

4.1 Evaluation Procedures

(a) Bids will be assessed in accordance with the entire requirement of the bid solicitation including the technical and financial evaluation criteria.

(b) An evaluation team composed of representatives of Canada will evaluate the bids.

4.1.1 Technical Evaluation

Each bid will be reviewed to determine whether it meets the mandatory requirements of the bid solicitation. Any element of the bid solicitation identified with the words ‘‘must’’ or ‘‘mandatory’’ is a mandatory requirement.

Bids that do not comply with each and every mandatory requirement will be declared non-responsive and be disqualified.

4.1.1.1 Mandatory Technical Criteria

Mandatory requirements	Reference
Bidder’s achievements	Provide signed reference letters to demonstrate the requirements of paragraph A of this section 4 are fulfilled. A sample of an acceptable (typical) reference letter is provided in Annex D.
Key personnel achievements	Key personnel on the Bidder’s project team are: 1) Project authority Provide signed reference letters to demonstrate that the requirements of paragraph B.1 of this section 4 are fulfilled. A sample of an acceptable (typical) reference letter is provided in Annex D.

A Bidder's achievements

The Bidder must present reference letters to show that it has completed two (2) design or fabrication projects of composite material goods completed within the five (5) years prior to this bid closing date.

Each of the two (2) projects must meet the following criteria:

1. Design or fabrication project of composite material goods;
2. Project completed within the five (5) years prior to this bid closing date; and
3. Project of a minimum value to the award in manufacturing cost of 250,000.00 CAD, applicable taxes not included.

For each project, the Bidder must provide a reference letter signed by a client representative with the following elements:

- Confirmation that the project meets the three criteria listed above;
- Name of the company that completed the work;
- Project title;
- Location;
- Summary description of the project;
- Name, title, telephone number, email address and signature of the client representative;
- Client name, date;
- Initial contract value, applicable taxes excluded;
- Final contract value, applicable taxes excluded;
- Expected start and completion dates; and
- Actual start and completion dates.

The Bidder must have knowledge of the projects submitted. Previous project experience of entities other than the Bidder's own will not be considered during evaluation unless the entities are part of the Bidder's joint venture.

Please indicate those projects that were carried out as part of a joint venture and describe the responsibilities of each joint venture participant involved in each project.

We suggest that Bidders use the sample reference letters for the bidder's achievements provided in Annex D. However, it should be noted that using the sample letter is not mandatory.

B Key personnel's achievements

The goal is to show that the proposed key personnel on the Bidder's team have the abilities, experience and skills required to provide the services listed in the plans and specifications. The proposed resources for the key personnel positions match with the individuals whom the Bidder would use to perform services.

It should be noted that the experience and skill of the key personnel is independent of their previous association with the current Bidder.

The positions held by the key personnel are:

1) Project authority.

Note that under this bid solicitation, the task description associated with each position filled by key personnel is as follows:

Project authority

The project authority is the main representative of the contractor assigned to the project, and in this role the project leader is responsible for communications with PWGSC for the duration of the project; the implementation of work in accordance with the plans and specifications (P&S) and the general conditions of the contract; the coordination of work including that of its subcontractors; developing and respecting a schedule; and developing work methods with the team that consider the requirements of the S&P, especially environmental requirements.

B.1 Project authority's achievements

The Bidder must submit reference letters to demonstrate that the resource proposed as project authority has completed two (2) design or fabrication projects of composite material goods completed within the five (5) years prior to this bid closing date.

Each of the two (2) projects must meet the following criteria:

1. Design or fabrication project of composite material goods;
2. Project completed within the five (5) years prior to this bid closing date; and
3. Project of a minimum value to the award in manufacturing cost of 250,000.00 CAD, applicable taxes not included.

For each project, the Bidder must provide a reference letter signed by a client representative with the following elements:

- Confirmation that the project meets the three criteria listed above;
- Name of the company that completed the work;
- Project title;
- Location;
- Summary description of the project;
- Name, title, telephone number, email address and signature of the client representative;
- Client name, date;
- Initial contract value, applicable taxes excluded;
- Final contract value, applicable taxes excluded;
- Expected start and completion dates; and
- Actual start and completion dates.

We suggest that Bidders use the sample reference letters for the project authority's achievements provided in Annex D. However, it should be noted that using the sample letter is not mandatory.

4.1.2 Financial Evaluation

1. Bidders must submit firm prices, customs duties and excise taxes included, and Applicable Taxes excluded.

2. Except where the bid solicitation requires bids to be submitted in Canadian dollars, bids submitted in foreign currency will be converted to Canadian dollars for evaluation purposes. For bids submitted in foreign currency, the rate indicated by the Bank of Canada on the bid closing date, or on another date specified in the bid solicitation, will be used as a conversion factor.

3. Bidders must provide Canadian Coast Guard (CCG) DDP Delivered Duty Paid (DDP), Department of Fisheries and Oceans, Marine and Civil Infrastructure at 7025 Boul. Guillaume-Couture, Lévis, Quebec, Canada according to Incoterms 2010 for shipments from a commercial contractor. Submissions will be evaluated on a DDP basis.

4.2 Basis of Selection

SACC Manual Clause A0031T (2010-08-16), Basis of Selection - Mandatory Technical Criteria

PART 5 – CERTIFICATIONS AND ADDITIONAL INFORMATION

Bidders must provide the required certifications and additional information to be awarded a contract.

The certifications provided by Bidders to Canada are subject to verification by Canada at all times. Unless specified otherwise, Canada will declare a bid non-responsive, or will declare a contractor in default if any certification made by the Bidder is found to be untrue whether made knowingly or unknowingly, during the bid evaluation period or during the contract period.

The Contracting Authority will have the right to ask for additional information to verify the Bidder's certifications. Failure to comply and to cooperate with any request or requirement imposed by the Contracting Authority will render the bid non-responsive or constitute a default under the Contract.

5.1 Certifications Required with the Bid

Bidders must submit the following duly completed certifications as part of their bid.

5.1.1 Integrity Provisions - Declaration of Convicted Offences

In accordance with the Integrity Provisions of the Standard Instructions, all bidders must provide with their bid, **if applicable**, the declaration form available on the Forms for the Integrity Regime website (http://www.tpsgc-pwgsc.gc.ca/ci-if/declaration-eng.html), to be given further consideration in the procurement process.

5.2 Certifications Precedent to Contract Award and Additional Information

The certifications and additional information listed below should be submitted with the bid, but may be submitted afterwards. If any of these required certifications or additional information is not completed and submitted as requested, the Contracting Authority will inform the Bidder of a time frame within which to provide the information. Failure to provide the certifications or the additional information listed below within the time frame provided will render the bid non-responsive.

5.2.1 Integrity Provisions – Required Documentation

In accordance with the section titled Information to be provided when bidding, contracting or entering into a real procurement agreement of the Ineligibility and Suspension Policy (http://www.tpsgc-pwgsc.gc.ca/ci-if/politique-policy-eng.html), the Bidder must provide the required documentation, as applicable, to be given further consideration in the procurement process.

5.2.2 Federal Contractors Program for Employment Equity - Bid Certification

By submitting a bid, the Bidder certifies that the Bidder, and any of the Bidder's members if the Bidder is a Joint Venture, is not named on the Federal Contractors Program (FCP) for employment equity "FCP Limited Eligibility to Bid" list available at the bottom of the page of the Employment and Social Development Canada (ESDC) - Labour's website (https://www.canada.ca/en/employment-social-development/programs/employment-equity/federal-contractor-program.html#).

Canada will have the right to declare a bid non-responsive if the Bidder, or any member of the Bidder if the Bidder is a Joint Venture, appears on the "FCP Limited Eligibility to Bid" list at the time of contract award.

Canada will also have the right to terminate the Contract for default if a Contractor, or any member of the Contractor if the Contractor is a Joint Venture, appears on the "FCP Limited Eligibility to Bid" list during the period of the Contract.

5.2.3 Welding Certification - Bid

1. Before contract award and within two (2) calendar days of the written request of the Contracting Authority, the successful bidder must demonstrate that it has a recognized qualification for welding.

2. Welding must be performed by a welder approved by the Canadian Welding Bureau in accordance with the requirements of the following Canadian Standards Association (CSA) standards:

   a) CSA W47.1-09 (R2014), Certification of Companies for Fusion Welding of Steel Division 2.1.

PART 6 - RESULTING CONTRACT CLAUSES

The following clauses and conditions apply to and form part of any contract resulting from the bid solicitation.

6.1 Security Requirements

There is no security requirement applicable to the Contract.

6.2 Statement of Requirement

The Contractor must meet all requirements and perform all work in accordance with this Contract, which includes the design and fabrication of new composite material shelters and accessories in accordance with the Statement of Work, the Performance Specification. and the plans in the Appendices.

6.3 Standard Clauses and Conditions

All clauses and conditions identified in the Contract by number, date and title are set out in the Standard Acquisition Clauses and Conditions Manual (https://buyandsell.gc.ca/policy-and-guidelines/standard-acquisition-clauses-and-conditions-manual) issued by Public Works and Government Services Canada.

6.3.1 General Conditions

2030 (2018-06-21), General Conditions - Higher Complexity - Goods apply to and form part of the Contract.

6.3.1.1 Warranty

Article 22 of General Conditions 2030 (2018-06-21) is amended as follows:

Paragraph 1 is deleted in its entirety and replaced by the following:

1. Despite inspection and acceptance of the Work by or on behalf of Canada and without restricting any other provision of the Contract or any condition, warranty or provision imposed by law, the Contractor warrants that, for 60 months (or any other period stated in the Contract), the Work will be free from all defects in design, material or workmanship, and will conform to the requirements of the Contract. The warranty period begins on the date of delivery, or if acceptance takes place at a later date, the date of acceptance. With respect to Government Property not supplied by the Contractor, the Contractor's warranty will extend only to its proper incorporation into the Work.

Paragraph 2 is deleted in its entirety and replaced by the following:

2. The Contractor remains responsible for correcting any defect or non-compliance that occurs during the storage period in Levis and at the Heath Pointe, Anticosti site for the warranty period including parts and labor. However, the CCG will provide helicopter air transport for the personnel (maximum of two (2) people) and parts when a correction is required at the Heath Pointe site. Consider that this air transportation would be from Havre St-Pierre airport. The manufacturer will have to go to this place by his own means.

6.4 Term of Contract

6.4.1 Period of the Contract

The period of the contract is from the date of the contract until the end of the warranty period inclusively.

6.4.2 Delivery Date

All the deliverables must be received on or before 2020-03-20.

6.5 Authorities

6.5.1 Contracting Authority

The Contracting Authority for the Contract is:

Name: Daniel Boisclair
Title: Supply Specialist
Public Works and Government Services Canada
Address: 1550 D'Estimauville Ave.,
Quebec, QC,
G1J 0C7

Telephone: 418-649-2831
Facsimile: 418-648-2209
E-mail address: Daniel.Boisclair@tpsgc-pwgsc.gc.ca

The Contracting Authority is responsible for the management of the Contract and any changes to the Contract must be authorized in writing by the Contracting Authority. The Contractor must not perform work in excess of or outside the scope of the Contract based on verbal or written requests or instructions from anybody other than the Contracting Authority.

6.5.2 Project Authority

The Project Authority for the Contract is: (Will be added at Contract Award)

Name: _____
Title: _____
Organization: _____
Address: _____

Telephone: ___ ___ _____
Facsimile: ___ ___ _____
E-mail address: _____

The Project Authority is the representative of the department or agency for whom the Work is being carried out under the Contract and is responsible for all matters concerning the technical content of the Work under the Contract. Technical matters may be discussed with the Project Authority, however the Project Authority has no authority to authorize changes to the scope of the Work. Changes to the scope of the Work can only be made through a contract amendment issued by the Contracting Authority.

6.5.3 Contractor's Representative

The Contractor's Representative for the Contract is:

Name: _____
Title: _____
Organization: _____
Address: _____

Telephone: ___ ___ _____
Facsimile: ___ ___ _____
E-mail address: _____

6.6 Payment

6.6.1 Basis of Payment

In consideration of the Contractor satisfactorily completing all of its obligations under the Contract, the Contractor will be paid a firm price as specified in Annex B for a cost of $ _____ (*insert the amount at contract award*). Customs duties are included and Applicable Taxes are extra.

Canada will not pay the Contractor for any design changes, modifications or interpretations of the Work, unless they have been approved, in writing, by the Contracting Authority before their incorporation into the Work.

6.6.2 Limitation of Price

SACC Manual clause C6000C (2017-08-17), Limitation of Price

6.6.3 Terms of Payment

SACC Manual clause H1001C (2008-05-12), Multiple Payments

6.7 Invoicing Instructions

1. The Contractor must submit invoices in accordance with the section entitled "Invoice Submission" of the general conditions. Invoices cannot be submitted until all work identified in the invoice is completed.

2. Invoices must be distributed as follows:

    a. The original and one (1) copy must be forwarded to the address shown on page 1 of the Contract for certification and payment.

    b. One (1) copy must be forwarded to the Contracting Authority identified under the section entitled "Authorities" of the Contract.

6.8 Certifications and Additional Information

6.8.1 Compliance

Unless specified otherwise, the continuous compliance with the certifications provided by the Contractor in its bid or precedent to contract award, and the ongoing cooperation in providing additional information are conditions of the Contract and failure to comply will constitute the Contractor in default. Certifications are subject to verification by Canada during the entire period of the Contract.

6.9 Applicable Laws

The Contract must be interpreted and governed, and the relations between the parties determined, by the laws in force in Quebec.

6.10 Priority of Documents

If there is a discrepancy between the wording of any documents that appear on the list, the wording of the document that first appears on the list has priority over the wording of any document that subsequently appears on the list.

a) the Articles of Agreement;
b) the general conditions 2030 (2018-06-21), General Conditions - Higher Complexity - Goods ;
c) Annex A, Statement of Requirement;
d) Annex B, Basis of Payment;
e) Annex C, Plans;
f) Annex D, Reference letters
g) the Contractor's bid dated _____.

6.11 Shipping Instructions - Delivery at Destination

Goods must be shipped and unloaded at the destination specified in the contract and delivered duty paid (DDP); Canadian Coast Guard (CCG), Department of Fisheries and Oceans, Marine and Civil Infrastructure, 7025, Boul. Guillaume-Couture, Levis, Quebec, Canada according to Incoterms 2000 for shipments from a commercial contractor.

6.11.1 Additional delivery instructions

During transport, the Contractor is responsible for protecting all parts, materials, equipment and works and must provide protection on the shelters to protect the outer coating thereof.

6.12 SACC Manual Clauses

D0018C	2007-11-30	Delivery and Unloading
G1005C	2016-01-28	Insurance - No Specific Requirement
B1501C	2006-06-16	Electrical equipment
B7500C	2006-06-16	Excess Goods

6.13 Inspection and acceptance

The Canadian Coast Guard (CCG) Project Authority will be the Inspection Authority. All reports, deliverables, documents, goods and services provided under the Contract will be subject to inspection by the CCG Project Authority or his representative. If reports, documents, goods or services do not comply with the requirements of the Statement of Work and are not satisfactory to the CCG Project Authority, the CCG Project Authority will have the right to reject or request correction thereof. , at the contractor's expense only, before recommending payment.

ANNEX "A"

STATEMENT OF REQUIREMENT

The "Performance Specification" enclosed with this document must be inserted at this point and forms an integral part of the document.

ANNEX "B"

BASIS OF PAYMENT

Item	Description	Quantity	Unit	Firm price
1	**DESIGN OF SHELTERS, SHEDS, FOUNDATIONS AND ACCESSORIES AS DESCRIBED IN ANNEX A - STATEMENT OF NEEDS AND PERFORMANCE SPECIFICATIONS AND PLANS PROVIDED.**	1	Lot	$
2	**FABRICATION OF SHELTERS, SHEDS, EXTENSIONS AND ACCESSORIES AS DESCRIBED IN ANNEX A - STATEMENT OF NEEDS AND PERFORMANCE SPECIFICATIONS AND PLANS PROVIDED.** **(includes the supply of hardware and fasteners)**	1	Lot	$
	DELIVERY DDP (LEVIS, QUEBEC, CANADA) **(Includes customs duties, handling, delivery and unloading.)**	1	Lot	$
			TOTAL (CAD)	$
Note: Prices in Canadian dollars excluding Applicable Sales Taxes.				

ANNEX "C"

PLANS

The plans enclosed with this document must be inserted at this point and forms an integral part of the document.

ANNEX "D"

REFERENCE LETTERS

Included in this annex:
- REFERENCE LETTER – BIDDER'S ACHIEVEMENTS
- REFERENCE LETTER – PROJECT AUTHORITY'S ACHIEVEMENTS

BIDDER'S ACHIEVEMENTS

This confirms that the following company: _____

completed the work of the following project: _____

at the following location: _____.

Summary description of the project work:

_____

_____

_____

_____

_____

(If needed, attach other sheets to further describe the project.)

Initial contract value (applicable taxes excluded)	Final contract value (applicable taxes excluded)
Expected start date	Expected completion date
Actual start date	Actual completion date

The project described above meets the following requirements:

(please check all that apply) →	**Yes**	**No**
Design or fabrication project of composite material goods.		
Project completed within the five (5) years prior to this bid closing date.		
Project of a minimum value to the award in manufacturing cost of 250,000.00 CAD, applicable taxes not included.		

Client :

Name of representative (Print)	Title	Signature	Date
Telephone	Email	Name of client's organization	

PROJECT AUTHORITY'S ACHIEVEMENTS

This confirms that the following individual: _____

employed by the following company: _____

acted as the project leader during work on the following project: _____

at the following location: _____.

Summary description of the project work:

_____

_____

_____

_____

_____

(If needed, attach other sheets to further describe the project.)

_____ Initial contract value (applicable taxes excluded)	_____ Final contract value (applicable taxes excluded)
_____ Expected start date	_____ Expected completion date
_____ Actual start date	_____ Actual completion date

The project described above meets the following requirements:

(please check all that apply) →	**Yes**	**No**
Design or fabrication project of composite material goods.		
Project completed within the five (5) years prior to this bid closing date.		
Project of a minimum value to the award in manufacturing cost of 250,000.00 CAD, applicable taxes not included.		

Client :

_____ Name of representative (Print)	_____ Title	_____ Signature	_____ Date

_____ Telephone	_____ Email	_____ Name of client's organization

DESIGN AND FABRICATION OF NEW COMPOSITE SHELTERS, SHEDS AND ACCESSORIES

FOR THE HEATH POINTE SITE, ANTICOSTI ISLAND

CANADIAN COAST GUARD

PERFORMANCE SPECIFICATIONS

PUBLIC SERVICES AND PROCUREMENT CANADA

Anticosti Island Telecommunications Site

FOR TENDER

2019 10 15

TABLE OF CONTENTS

APPENDICES

A. GENERAL

1.1 RELATED REQUIREMENTS

.1 This section is general in nature and presents information that may be related to all sections of the tender document.

1.2 WORK INCLUDED IN CONTRACT DOCUMENTS

.1 The Canadian Coast Guard (CCG) currently has a remotely monitored telecommunications site at Heath Point, Anticosti Island. The site consists of a survival shelter, a shelter for the generating sets, and another for electronic equipment. The CCG wishes to replace these three shelters with one shelter for the generating sets, one shelter for survival purposes and for electronic equipment, and three sheds for petroleum-related equipment and electronic equipments. More specifically, the first shed will be used to store petroleum products and equipment used to fill tanks, while the second shed will be used to store the decontamination kit, the content of which is detailed in Annex A for information purposes only and finally, the third one will be used for the electronic equipment maintenance.

.2 The Work under this Contract consists of, but is not limited to:

- .1 Design and fabrication of two (2) composite shelters,
- .2 Design and fabrication of three (3) composite sheds,
- .3 Design of temporary and permanent foundations for the shelters and sheds,
- .4 Design and fabrication of accessories (doors, windows, entrance vestibules, goosenecks, air inlets and outlets (I/O), cable I/O, conduit I/O, exhaust outlets, cable troughs and sleeves, etc.),
- .5 Fabrication of two composite veranda/walkway extensions: one in front of the sheds and the other between the shelters,
- .6 Supply of hardware and fasteners needed to modify the veranda, walkway and guardrails,
- .7 Supply of hardware and fasteners needed to refurbish the two (2) columns of the exterior cable tray system.

.3 The final destination of all deliverables is the CCG telecommunications site at Heath Point, Anticosti Island. However, the Maker must deliver the shelters, sheds and accessories to the CCG site in Lévis.

.4 The Work covers the design and fabrication of all components stipulated in these specifications and in the Contract Drawings. This includes the preparation and handling of shelters for land transport to the Lévis site and supply of all the instructions necessary for land and/or marine transport to the Anticosti site. The latter site will be reached by a general contractor (beyond the scope of this Contract). Finally, supply of handling instructions for depositing the shelters on a barge and/or installing them on temporary or permanent foundations.

.5 Foundations must be designed both for temporary storage of the shelters and sheds in Lévis as well as for their final installation at

Heath Point.

1.3 CCG SITES INVOLVED

.1 The shelters and sheds must be designed based on local conditions at the Heath Point site, located at the tip of Anticosti Island. However, the Maker must deliver fabricated items to the CCG site in Lévis. Design parameters must be approved by CCG and appear on the drawings.

1.4 SITE DRAWINGS AND PHOTOGRAPHIC SURVEYS

.1 No site visit will be organized by CCG, whether for Heath Point or Lévis. A drawing and photographic survey of the sites as well as the inside of the existing shelters are provided in the annexes.

1.5 WORK SEQUENCE

.1 Co-ordinate the work progress schedule based on the date on which the shelters, sheds and other deliverables must be delivered to the Lauzon site at Lévis. Refer to the paragraph 1.5.5 and subsequent paragraphs of this section and 1.16 and following – Timeline.

.2 Within ten (10) days following award of the Contract, submit, for approval by the CCG Representative, a work schedule in accordance with the instructions of the CCG Representative indicating the various progress stages planned for the stipulated date of completion (September 18, 2020). Once approved by the CCG Representative, this schedule will become the benchmark throughout the project.

.3 Certain elements related to the equipment have not yet been set. Factor in response time for the CCG Representative to validate the information on the generating sets and the location of the ventilation and exhaust inlets and outlets. This will be confirmed by the CCG Representative after the Contract is awarded. The drawings illustrate the required openings, but their location may change.

.4 Deliver the Work under this Contract before September 18, 2020. However, provide the drawings and specifications for construction (foundations, detail drawings, assembly drawings and installation drawings), signed and bearing the requisite stamp (in PDF format) and AutoCAD in accordance with the CCG drafting standard before March 20, 2020.

.5 Summary steps to be planned and specifically named in the schedule to be submitted. All documents to be submitted must be approved by the CCG Representative before proceeding to the next stage.

.1 Design of the two composite materials shelters including their accessories (doors, windows, entrance vestibules, goosenecks for air inlets and outlets (I/O), cable I/O, conduit and pipe I/O, exhaust outlets for generating sets, temporary and permanent foundations [drawings must show design criteria and reaction at the support], finishes and structures, jacking/hoisting locations, etc.). Clearly describe in the

specifications the shelter handling and preparation instructions for all types of transport, illustrated in the drawings.

.1 Drawings and specifications at 50% completion
.2 Drawings and specifications at 95% completion
.3 Final drawings and specifications

.2 Design of three (3) composite material sheds including their accessories, temporary and permanent foundations (drawings must show reaction at the support), containment pond (to be supplied), alterations to walkways, veranda, etc. Clearly describe in the specifications the shed handling and preparation instructions for all types of transport, illustrated in the drawings.

.1 Drawings and specifications at 50% completion
.2 Drawings and specifications at 95% completion
.3 Final drawings and specifications

.3 CCG approval of the various versions of drawings and specifications, shop drawings and other relevant documents/data before fabrication begins: design criteria, etc.

.4 Fabrication of composite material shelters, sheds and their accessories.

.5 Fabrication of composite material alterations to guardrails, walkways, veranda, exterior cable tray system, etc.

.6 Detail the fabrication quality controls requested by the Maker at the right times (internal control) and by the CCG Representative (approval of the various versions of the drawings and specifications, shop documents and drawings, shop inspection visits, provisional and final acceptance).

.7 Fabrication of the composite material veranda extensions in front of the sheds and between the two shelters.

.8 Conduct the shop inspection visit with the CCG Representative as a witness before road transport to the Lévis site. Tightness tests for the two shelters must be conducted at this point.

.9 Correction of faulty work found during this final inspection visit before shipment to Lévis.

.10 Delivery of all documentation, as-built drawings, shelter handling and preparation instructions for land and marine transport, drawings and specifications for construction and installation of shelters and sheds along with the Building Management Manual (BMM), photographic survey, etc.

.11 Delivery of shelters, sheds and accessories to the CCG site located in Lévis.

.12 Validation and provisional acceptance by the CCG Representative at the Lévis site with corrections of faulty work where required by the Maker immediately.

.13 Final acceptance of the Work at the Lévis site, once all faulty work is corrected by the Maker.

1.6 MAKER'S USE OF PREMISES

.1 All material must be delivered and stored outside of the Canadian Coast Guard (CCG) site in Lévis. The site is located on the south shore of the St. Lawrence River. From Highway 20, take the "Monseigneur Bourget" exit in Lévis, head northward to Highway 132. From there, head westward on Highway 132 over a distance of 0.7 km. The site entrance is located at the following street address, for which there is no roadside indication: 7025 Guillaume-Couture Blvd. The site is easy to recognize because two 245 m guyed towers are located there.

.2 Plan for the use of overhead space before beginning handling work for the shelters in particular. Make sure there is no interference with existing overhead elements (tower guy lines, overhead wires, and so on).

.3 The minimum number of temporary supports to be designed (e.g., timber cribs) that the Maker must provide for storage of the shelters and sheds at the Lévis site is specified below. Their configuration and the number required are to be confirmed by the Maker. During the design phase, plan for a ground support height of approximately 1 m and a configuration that allows a double drop frame semi-trailer to slide between the supports or the use of a crane. These supports will also be used at the Heath Point site before the shelters are placed on their permanent foundations. There temporary foundations must not damage the CCG property and must be easy to handle. After the shelters are designed, the CCG will specify the exact height of the permanent and temporary foundation.

.1 Shelter for generating sets: at least 12 supports
.2 Shelter for survival purposes and electronic equipments: at least 12 supports
.3 Sheds: at least 4 supports for each shed.
.4 The Lévis site will be used solely as a delivery and storage location. No other activity may take place there. Faulty work must be corrected in the shop before road transport. The only corrective work that may be performed at the CCG site is to remedy damage that occurs during road transport. Provide everything necessary for the storage to be suitable for a period of two years and thereby ensure the integrity of all deliverables. Provide wood skids so that no deliverable is laid directly on the ground. Fasten all deliverables appropriately to facilitate transport and outside storage.

.4 The presence of the Maker must not impede CCG activities at the Lévis site. The Maker must at all times give CCG personnel or their representative safe access to the site and to the various installations.

.5 Notify the CCG Representative at least 72 hours before moving to the Lévis site, as the CCG Representative must be present.

1.7 DOCUMENTS REQUIRED

.1 The design of the shelters, sheds and accessories will be used to

produce drawings and a specification for their fabrication and another complete set for their installation; these must be signed and bear the stamp of an engineer or an architect, both of whom are licensed in Canada, and issued in both official languages.

.2 In addition to these drawings and specifications, shop drawings must also be issued for approval by the CCG Representative, also before fabrication commences.

.3 Use and comply with the CCG drafting standard (Schedule D) to issue fabrication and installation drawings (including the shelter preparation and handling method). The specifications must be issued using the most recent version of the National Master Specification (NMS): temporary and permanent foundations, transport and handling, installation of shelters and sheds on temporary and permanent foundations, fabrication and installation of goosenecks, entrance vestibules and other accessories. All drawings and specifications for fabrication must be issued in French whereas those for installation/construction at the Heath Point site must be issued in both languages, including the handling and hoisting instructions for the shelters and sheds.

.4 Submit a quality manual detailing at least the following elements. The manual must be used through the project and submitted before provisional acceptance of the Work at the CCG site in Lévis. The CCG reserves the right to ask questions about these elements at any time and the answers must be received within 48 hours.

a. List of revisions and dates
b. Quality officer
c. Officer within organization holding responsibility and authority
d. Preparation of bids and contract review
e. Engineering and development
f. Design and drawing control
g. Document control
h. Selection of vendors and procurement
i. Production and preparation of service
j. Quality control
k. Product identification and traceability
l. Internal quality audits
m. Management of non conformities client complaints and corrective measures

.5 Supply for approval by the CCG Representative one copy of each of the following documents before fabrication of such components commences; all these components must then be grouped together and submitted to the CCG before provisional acceptance of the project, to be conducted at the Lévis site.

.1 Design drawings and specifications for the shelter, sheds, entrance vestibules and accessories, temporary and permanent foundations, etc.
.2 Shop drawings
.3 Change orders
.4 Other Contract amendments
.5 Field test reports
.6 Copy of approved work schedule
.7 Building Management Manual (BMM)
.8 Instructions for assembly, handling, temporary installation in Lévis and permanent installation at Heath Point for the shelters, sheds, goosenecks, entrance vestibules, walkways, verandas and all other components.
.9 Photos taken during fabrication of the shelters, sheds and accessories.
.10 Other documents as indicated.

.6 Submittals in accordance with Section 01 33 00– Submittal Procedures.

1.8 DELIVERABLES AND DELIVERY

.1 Refer to deliverables under paragraphs 1.2.2 and subsequent paragraphs (WORK INCLUDED IN CONTRACT DOCUMENTS) of this section and detailed in Schedule C – Summary of Deliverables.

.2 Ensure that all openings in the shelters and sheds are protected from weather conditions during delivery.

.3 Appropriately package and identify cumbersome accessories (entrance vestibules, goosenecks for air inlets and outlets (I/O), parts for the veranda and walkway extension, etc.) on skids designed for that purpose.

4. Package in sealed, weatherproof boxes and appropriately identify the small parts and hardware needed to assemble all the elements (air inlets and outlets [small parts], small parts for the veranda extension, parts needed to modify the walkway, all hardware including the necessary fasteners, etc.). All bolts must be of stainless steel and supplied in a sufficient number plus 10%.

1.9 WARRANTY

.1 The Maker is responsible for correcting any defect that appears during the storage period in Lévis and at the Heath Point site, Anticosti, for a total period of five (5) years, including parts and labour. However, the CCG will provide air transport by helicopter for the personnel (maximum two persons) and parts when corrective work is necessary at the Heath Point site. It should be assumed that

this air transport will depart from the airport in Havre St-Pierre. The Maker must reach this location by its own means.

1.10 MATERIAL SUPPLIED BY CCG

.1 The CCG will not supply any material, bolts, conduits or ducts, equipment or either items regardless of what may be suggested elsewhere in the specifications, annexes or Contract Drawings, except for the following items:

.1 Electric toilet to be installed in the survival section.

.2 Air exchanger (unit only) to be installed in the survival section.

.2 The Maker must provide the conduits, ducts, accessories and all the hardware necessary for installing these two items of equipment. Electrical connection is beyond the scope of this Contract. This equipment and their conduits must appear in the drawings during the shelter design phase.

.3 The Maker is responsible for providing all material and equipment necessary to perform the Work as described in this project.

.4 The material supplied by the CCG can be picked up at the following address. An appointment must be made with the CCG Representative at least 48 hours in advance of pick-up:

CCG Quebec Base
101 Champlain Blvd.
Quebec City, QC
G1K 7Y7

1.11 SPECIFIC REQUIREMENTS

.1 The CCG plans to install a full-immersion fire suppression system like the Novec 1230 system with a 4.2% concentration at 21ºC (70ºF) activated by crossed-zone smoke detection for the generating-set shelter (beyond the scope of this Contract). The shelter must thus be smoketight to ensure the efficacy of this type of fire suppression system. The Maker must test for smoke tightness to meet this criterion at the time of factory acceptance immediately prior to delivery to the Lévis site, with the CCG Representative as a witness. If the Work fails this test, the Maker must carry out the necessary corrective work. The type of suppression system will be confirmed after this Contract is awarded. The required tests will be similar. The Maker must perform the following work, among other work, and must hire a specialized firm to conduct the tightness tests:

.1 Finish fabricating the shelter and have installed the double door and single door with drop seals. Shut the doors.

.2 Temporarily close all other openings of this shelter. The means used to close the openings must be effective without damaging the shelter, finishes and planned use (air inlets and outlets, generator exhaust pipe, penetration of electrical conduits and cables, etc.).

.3 Assist the specialized firm that will perform factory tightness tests.

.4 Perform the test described in paragraph 1.13.2 and subsequent paragraphs of this section or the test best suited to the suppression system selected by the CCG.

.5 If the test is successful, remove the material used to block the openings of the generating-set shelter and correct any fault or deficiency resulting from the tests. If the test fails, conduct corrective work to make the shelter smoketight and repeat the test until it meets the mandatory criteria.

.2 Factory Quality Control – Tightness Test

.1 The Maker must perform the tightness test with a 970 HP RETROTEC machine or a more recent version, as earlier versions will not be accepted.

.2 The test must show sufficient tightness to maintain a 4.2% concentration of the fire-suppression agent at the predetermined height (height of the control consoles for the generating sets).

.3 Tightness of the generating-set shelter protected by the Novec 1230 system (or other system to be specified)

.1 In accordance with the NFPA 2001 standard more specifically the C appendice.

.2 Submit to the CCG Representative a written report signed by the specialized firm on all the test results, including those that demonstrate compliance.

1.12 PROJECT KICK-OFF MEETING

.1 In the days following Contract award, the CCG Representative will convene a kick-off meeting which the Maker's project manager must attend. The meeting will be held in French at the Quebec Base of the Canadian Coast Guard, at the following address:

CCG Quebec Base
101 Champlain Blvd.
Quebec City, QC
G1K 7Y7

.2 Before this meeting, the Maker must submit to the CCG Representative a detailed work schedule as well as its prevention (health and safety) and quality control programs, including the inspections to be conducted by the CCG, including provisional and final acceptance.

1.13 SITE MEETING (Shop)

.1 The CCG Representative will organize and set the times of site meetings and will be responsible for preparing and distributing the minutes, where applicable. These meetings will take place on the

premises where the shelters, sheds and accessories are to be fabricated.

1.14 PHOTOGRAPHS

.1 The Maker must take photos at every step of the work. In total, about 200 photos must be submitted to the CCG Representative before provisional acceptance of the Work at the Lévis site.

.2 Provide the photos in digital format and medium definition on CD-ROMs, USB keys or on a public server. Each photo must be dated and named for easy identification.

1.15 CCG QUALITY CONTROL

.1 The CCG has hired a consultant to fulfil the following mandate, among other responsibilities:

.1 Revise the Maker's quality control manual.

.2 Verify the engineering drawings for fabrication and for construction/installation of the shelters, sheds and accessories, as well as alterations to walkways and verandas with their accessories, foundations, etc. This also includes all associated shop drawings.

.3 Check all reports, instructions issued by the specialized firms hired by the Maker to ensure that the products and work comply with the requirements of the Contract Drawings and the engineering drawings issued during the course of this project.

.4 Conduct shop inspection visits during fabrication.

.5 Perform provisional and final acceptance of the project at the Lévis site. In between these two steps, recommend approval of the as-built drawings, photographs and the shelter BMM issued by the Maker.

.6 Notify the CCG within a reasonable timeframe so that it may conduct an inspection. This time period will be agreed upon at the project kick-off meeting depending on the location of the fabrication shops but cannot be less than five (5) work days.

1.16 TIMELINE

.1 All Work included in this project must be 100% complete before September 18, 2020.

.2 The specifications and engineering (design) drawings, fabrication drawings and shop drawings must be 100% complete for March 20, 2020. These assets include, but are not limited to: shelters, sheds, goosenecks, entrance vestibules, alterations to the walkways and the veranda, temporary and permanent foundations, shelter and shed handling instructions, repair of the existing cable tray system, etc.

.1 Submit, for CCG comments, the preliminary version of all documents completed to 50% before February 7, 2020.

.2 Submit, for CCG comments, the 95% completed version of all documents before March 6, 2020.

.3 Submit, for CCG approval, the final version of all required documents completed to 100% before March 20, 2020.

.3 The final inspection of the Work at the shop before delivery to Lévis must occur before August 21, 2020. During this inspection, the tightness tests must take place and be witnessed by the CCG and the specialized firm hired and paid by the Maker.

.4 The date of receipt for all closeout submittals pertaining to the project must be prior to August 28, 2020, for CCG approval. This includes, but is not limited to, the shelter and shed BMM, as-built drawings for all assets and accessories, photographic survey created during fabrication, etc.

.5 All assets, components, accessories and hardware must be delivered to the Lévis site before September 4, 2020. Provisional acceptance of the project will take place in the days following.

.6 Prior to September 18 2020, the final acceptance will follow corrective work for faulty work identified during provisional acceptance, where necessary.

1.17 SNOW REMOVAL

.1 Snow removal throughout the project is at the Maker's expense. This includes, in particular, the Lévis site where all components, temporary foundations, assets and hardware must be delivered.

END OF SECTION

1. GENERAL

1.1 SUMMARY

.1 Section Includes
- .1 Performance and Construction Requirements.
- .2 Piers
  - .1 Material: reinforced poured concrete, pipe left in place
- .3 Spread footings anchored to rock in sufficient number
  - .1 Material: reinforced concrete.
- .4 Provide details for the temporary foundations to be used at the CCG Lévis and Heath Point sites.

.2 Related Requirements
- .1 This section is general in nature and presents information that may be related to all sections of the tender document.

1.2 REFERENCES

.1 CAN/CSA-A23.1-00, Concrete Materials and Methods of Concrete Construction

.2 CAN/CSA-A23.2, Methods of Test for Concrete

.3 CAN/CSA-A3000-13, Cementitious Materials Compendium.

.4 American Society for Testing and Materials (ASTM)
- .1 ASTM C39, Standard Test Method for Compressive Strength of Cylindrical Concrete Specimens
- .2 ASTM C78, Standard Test Method for Flexure Strength of Concrete (Using Simple Beam with Third-Point Loading)
- .3 ASTM C293, Standard Test Method for Flexure Strength of Concrete (Using Simple Beam with Center-Point Loading)
- .4 ASTM C496, Standard Test Method for Splitting Tensile Strength of Cylindrical Concrete Specimens

.5 Geotechnical study, VHF Communications Tower, Anticosti, November 1984 – Annex B.

1.3 DESIGN AND SERVICE LOADS

.1 Seismic Resistance
- .1 Conforming to light to moderate seismic activity.

.2 Design the foundations based on recommendations by the structural and geotechnical engineer for the design loads and local soil conditions and in accordance with the site's geotechnical study (Annex B). For working load limits, refer to the Contract Drawings and the various annexes.

.3 The geotechnical study must be used only as a guide. It is up to the designer to draw conclusions specific to the scope of existing conditions and the adequacy of the study for appropriate design and installation of the foundations.

.4 The CCG is considering conducting a complementary geotechnical study in summer 2020. The results will be given to the Maker, who must adjust the design of the permanent foundations if necessary because maybe CCG will change the construction site in Anticosti Island.

1.4 SUBMITTALS FOR APPROVAL/ INFORMATION

.1 Drawings and specifications for construction/installation: provide the drawings and specifications required for fabrication and for construction bearing the stamp of a qualified structural engineer licensed in Canada, in both official languages.

2. PRODUCTS

2.1 MATERIALS

.1 At the Heath Point site, the CCG will perform concrete work when the project is carried out in 2021: relocation of the walkway, landing and veranda, construction of the blinding slab for the tanks, etc. Below is the list of the materials to be used. *To prevent the general contractor responsible for the construction work at the Heath Point site from having to bring a wide range of products, the engineer who designs the permanent foundations for the shelters and shed must base himself or herself on these and ideally use the same products and materials. Where impossible, discussions must be held with the CCG Representative to harmonize all concrete requirements for the overall project.*

.1 Tubular column forms: round, spirally wound laminated fiber forms, internally treated with release material.

.2 Reinforcements: high strength steel bars.

.3 Concrete:

- .1 Mixture of GU-type (formerly Type 10) cementitious materials with a compressive strength at 28 days of 40 MPa.
- .2 Water free of any harmful quantity of oil, acids, alkalis, soluble chlorides, organic matter or any other harmful substance.
- 3. Fine and coarse aggregates of normal density; the maximum nominal size of the coarse aggregate is 20 mm.
- .4 Air content: 4% to 7%.
- .5 Settlement between 75 and 125 mm.
- .6 The use of calcium chloride is prohibited as a concrete additive.
- .7 The mixing water must be freshwater that is clean and potable.

3. EXECUTION

3.1 PERMANENT FOUNDATIONS

.1 Prepare drawings and specifications for the permanent foundations of the various shelters and sheds for potential future construction (beyond the scope of this Contract). Submit documents for approval by the CCG Representative in accordance with Section 01 33 00 – SUBMITTAL PROCEDURES.

END OF SECTION

1. GENERAL

1.1 SUMMARY

.1 Section Includes
- .1 Performance and Construction Requirements.
- .2 Temporary Foundations
  - .1 Materials: In general, temporary foundations are made of timber in the form of cribs.
- .3 Provide details for the temporary foundations to be used at the CCG Lévis site for storage as well as those for Heath Point before the shelters and sheds are installed on the permanent concrete foundations to be designed.

.2 Related Requirements
- .1 This section is general in nature and presents information that may be related to all sections of the tender document.

1.2 REFERENCES

.1 Geotechnical study for the Heath Point site, VHF Communications Tower, Anticosti, November 1984 – Annex B.

.2 Site layout plan for Lévis where the shelters, sheds and other related elements are to be stored. These must show the sections for material constituting the storage surface.

1.3 DESIGN AND SERVICE LOADS

.1 Seismic Resistance
- .1 Conforming to light to moderate seismic activity.

.2 Design the foundations based on recommendations by the structural and geotechnical engineer for the design loads and local soil conditions and in accordance with the geotechnical study (Annex B) for the Heath Point site and based on the layout created at the Lévis site.

.3 The geotechnical study must be used only as a guide. It is up to the designer to draw conclusions specific to the scope of existing conditions and the adequacy of the study for appropriate design and installation of the foundations.

.4 The temporary foundations must factor in the same working load limits as for the permanent foundations. In fact, a complete test bed will be performed at the Lévis site for all mechanics in the two shelters, installation of the kitchen cabinets and furnishings in the survival section, etc.

1.4 SUBMITTALS FOR APPROVAL/ INFORMATION

.1 Drawings: provide the required drawings bearing the stamp and signature of a qualified professional engineer licensed in Canada.

2. PRODUCTS

2.1 MATERIALS

.1 The materials used must be light, offer a degree of flexibility in terms of configuration and be sufficient in number as well as easy to transport by land and sea.

3. EXECUTION

3.1 TEMPORARY FOUNDATIONS

.1 Preparation of drawings and specifications for the temporary foundations of two shelters and sheds in sufficient number to ensure their stability without strain or movement. No break must appear and no joints must open (inside or outside). Submit documents for approval by the CCG Representative in accordance with Section 01 33 00 – SUBMITTAL PROCEDURES.

.2 Construction of foundations with delivery to the CCG site in Lévis.

END OF SECTION

1. GENERAL

1.1 SUMMARY

.1 Section Includes
- .1 Minimum installation and performance requirements for vinyl (PVC) windows.

1.2 REFERENCES

.1 Canadian General Standards Board (CGSB)
- .1 CAN/CGSB-12. 20-[M89], Structural Design of Windows for Buildings.

.2 Canadian Standards Association (CSA)/CSA International
- .1 CSA A440/A440.1-[F00], Windows/Special Publication A440.1-00, User Guide to CAN/ CSA-A440-[CSA-A440], Windows.
- .2 CSA A440.4-[F98], Window and Door Installation.
- .3 CAN/CSA G164-[M92(R2003)], Hot Dip Galvanizing of Irregularly Shaped Articles.

.3 National Building Code of Canada (NBC)

1.3 DESCRIPTION OF WORK

.1 Thermally broken PVC windows with the following characteristics for the survival section, in particular:
- .1 Four (4) opening casement windows based on the indications in the drawings.
- .2 Glazing: double-glazing.
- .3 Screens: on ventilating portion of windows.
- .4 Hardware: cranks with lock handle.
- .5 Finish: mass-coloured, 20-year finish, without discolouration, tarnishing, or other change in appearance.
- .6 Colour: white.

1.4 CALCULATION AND DESIGN CRITERIA

.1 The windows must be designed, manufactured and installed in accordance with most recent version of the CAN/CSA A440 standard.

.2 The windows must be designed taking into account the climate data for Anticosti Island set out in the National Building Code. Provide the CCG Representative with the parameters used for approval. These must appear on the signed and stamped shop drawings as well as all fabrication drawings.
- .1 Design temperature: January temperature, consistent with the NBC.
- .2 Hourly velocity pressure: 1 in 30 likelihood of being exceeded in a given year.
- .3 Earthquake: based on data indicated.

.3 Windows and their components must be designed to withstand the following stresses without deterioration.

.1 Daily cyclical temperature difference: 40 degrees Celsius.
.2 Service temperature range: -35 to 35 degrees Celsius.
.3 Cyclical exposure to dynamic overloads like velocity pressures.
.4 Relative humidity level: 95%.
.5 13 mm load deflection of the structural frame, attributable to dead loads and overloads, strain from creep, overloads due to earthquakes, lateral spread and other such stresses.

.4 The windows must be designed in accordance with the CSA A440 standard in terms of the minimal nominal classification criteria.
.1 Air tightness: fixed for fixed frames.
.2 Air tightness: A3 for opening windows.
.3 Water tightness: B6.
.4 Resistance to wind load: C4.
.5 Screen: S2.
.6 Glazing: G1 (clear).

.5 The thickness of the glass must be chosen in accordance with the CAN/CGSB-12.20 standard. The glass must be capable of withstanding permanent loads, lateral loads, dynamic and static loads, wind load, and loads sustained during transportation, handling and assembly.

.6 The windows must include a controlled system for channelling to the outside water that penetrates or forms on the inside. It is important to prevent water from accumulating or stagnating inside the windows.

.7 The air seal system, the vapour barrier and the rainscreens must be part of the seal system built into the windows. The windows must be designed so that various layers of seal correspond with those of the shelter envelope so that thermal bridges are kept to a minimum and there is appropriate control of the diffusion of air and vapour within the building envelope.

.8 The inserts required to install the windows must be designed to take construction and installation tolerances into account.

1.5 SUBMITTALS FOR APPROVAL/ INFORMATION

.1 Shop drawings: Submit shop drawings in accordance with Section 01 33 00 – Submittal Procedures.

.2 Shop drawings must show full-size details of the equipment and details of lintel, studs and base, the profile of the components, details of the interior and exterior trim, joints between multi-pane windows, and anchorage details.

.3 Submit a document from the window manufacturer certifying that the windows meet the requirements set out in the previous paragraph in this section – Calculation and Design Criteria (paragraph 1.4 and subsequent paragraphs).

1.6 TRANSPORT, STORAGE AND HANDLING

.1 The windows must be delivered, stored and handled in accordance with the requirements set out in Schedule A of the CSA A440.4 standard.

1.7 MAINTENANCE DATA

.1 Provide the necessary maintenance data and attach to the BMM.

2. PRODUCTS

2.1 MATERIALS

.1 Standard products that conform to the CSA A440 standard and to this section are acceptable provided their fabrication features and the installation methods used meet the requirements of the specifications and drawings.

.2 Include materials, products, accessories, and supplementary parts necessary to complete assembly and installation of Work in this Section.

.3 Each window must be constructed with new material.

.4 Isolation coating: alkali resistant bituminous coating.

.5 Insulation: polyurethane foam designed for window insulation.

.6 Sealants:

- .1 Application conforming to manufacturer's recommendations.
- .2 Compatibility: Provide gaskets and other related materials that are compatible with each other and with the substrates applied in the service and application conditions set out in these specifications.
- .3 Choose a colour that matches the jointing materials.
- .4 Choose sealants based on thermal expansion of the elements exposed to temperature variations.
- .5 Choose sealants that exceed the elasticity and adhesion criteria described in the following standards: CAN/CGSB 19-GP-5M, CAN/CGSB 19-GP-14M, CAN/ONGC-19.13-M87 (category 25), CAN/ONGC-19.17-M90 and CAN/ONGC-19.24-M90.

2.2 FABRICATION

.1 Components must have no defects that could alter their appearance, strength or durability.

3. EXECUTION

3.1 INSPECTION

.1 Install windows to CSA-A440.4, the instructions on the revised shop drawings and the manufacturer's installation instructions.

.2 Install windows where indicated, ensuring that they are level, plumb and square, and fasten them securely in place to prevent warping.

.3 Fill spaces between window jambs and adjacent surfaces with foam insulation to ensure an airtight seal.

END OF SECTION

1. GENERAL

1.1 SUMMARY

.1 Section Includes
- .1 Materials for exterior doors, exterior service doors and oversized special exterior doors, as well as installation and performance requirements for such doors.
- .2 Exterior Service Doors
  - .1 Insulated steel doors with galvanized steel frames.
  - .2 Hardware.
  - .3 Joint sealants.
- .3 Doors for Entrance Vestibules
  - .1 Uninsulated composite doors.
  - .2 Hardware.

.2 Related Requirements
- .1 Section 06 80 00: Composite Fabrications.

1.2 REFERENCES

.1 American Society for Testing and Materials International (ASTM)
- .1 ASTM 653/653M-06a, Standard Specification for Steel Sheet, ZincCoated (Galvanized) or Zinc-Iron Alloy-Coated (Galvannealed) by the Hot-Dip Process.
- .2 ASTM E 330-14, Standard Test Method for Structural Performance of Exterior Windows, Doors, Skylights and Curtain Walls and Doors by Uniform Static Air Pressure Difference.

.2 Canadian General Standards Board (CGSB)
- .1 CAN/CGSB 41-GP-6M-1983, Sheets, Thermosetting Polyester Plastics, Glass Fibre Reinforced.
- .2 CAN/CGSB 41-GP-19Ma-1984, Rigid Vinyl Extrusions for Windows and Doors.
- .3 CAN/CGSB-69.17-FM86 (R1993), Bored and Preassembled Locks and Latches.
- .4 CAN/CGSB-69.18-FM90/ANSI/BHMA A156.1-1981 (R1993), Butts and Hinges.
- .5 CAN/CGSB-69.19-F93/ANSI/BHMA A156.3-1989 (R1993), Exit Devices.
- .6 CAN/CGSB-69.20-M90/ANSI/BHMA A156.4-1986, Door Controls (Closers).
- .7 CAN/CGSB-69.21-M90/ANSI/BHMA A156.5-1984, Auxiliary Locks and Associated Products.
- .8 CAN/CGSB-69.29-93/ANSI/BHMA A156.13-1987, Mortise Locks and Latches.
- .9 CAN/CGSB-69.32-FM90/ANSI/BHMA A156.16-1981 (R1993), Auxiliary Hardware.

.3 Canadian Standards Association (CSA)/CSA International

.1 CAN/CSA O132.2 Series-90 (R1996), Wood Flush Doors.
.2 CAN/CSA-O141-91 (R1999), Softwood Lumber.
.3 CAN/CSA-O325.0-92 (R2003), Construction Sheathing.

.4 Canadian Steel Door Manufacturers Association (CSDMA)

1.3 DESIGN AND PERFORMANCE REQUIREMENTS

.1 Exterior Entrance Doors: doors and frames installed in exterior walls must be designed so that:
.1 their components can accommodate expansion and contraction within service temperature range of -35 to 35 degrees Celsius, with a daily cyclical temperature difference of 40 degrees Celsius.
.2 the play needed for the structure to bend is assured so that loads are not transmitted to the frames; and
.3 the thermal resistance rating (RSI) is 1.9.

.2 The doors of the shelters and shed must have a composite entrance vestibule (which serves as a storm door) with stainless steel stopper at two different points on the door. Provide a plate that will be secured to the steel grid floor so that the stopper can serve its purpose once the door is closed. It must not impede CCG activities. For the door to the entrance vestibule, provide hardware that locks with a simple mechanism to prevent corrosion from altering its operation. The solution must not impede traffic or the relocation of heavy objects using shear legs or a hand truck. Design the shelter–entrance vestibule assemblies so that these can be assembled and dismantled.

1.4 SUBMITTALS FOR APPROVAL/ INFORMATION

.1 Provide submittals in accordance with Section 01 33 00 - SUBMITTAL PROCEDURES.

.2 Shop Drawings:
.1 Shop drawings must show or indicate the following: the type of door and frame, materials, extruded profiles, method of assembly, position of hardware, insulation, reinforcement components and required clearances, location of visible fasteners and handling mechanisms. Includes doors for entrance vestibules and their hardware.
.2 Submit details from manufacturer's catalogues showing sections, dimensions and method of assembly for proposed type of door and frame.
.3 Shop drawings must include names of doors with references and numbers corresponding to those used on the drawings and the list of doors.

.3 List of Hardware: Submit a list of prescribed hardware, making sure to indicate the brand, model, material, function and finish and any other pertinent information.

.4 Quality Assurance:
.1 Test Reports: Submit certified test reports from approved

independent testing laboratories indicating compliance with specifications for specified performance characteristics and physical properties.

.2 Certificates: Submit product certificates signed by manufacturer certifying materials comply with specified performance characteristics and criteria and physical requirements.

.3 Instructions: Submit manufacturer's installation instructions.

2. PRODUCTS

2.1 EXTERIOR SERVICE DOORS

.1 Insulated, Galvanized Steel Doors.

.1 Description: thermally broken insulated doors with galvanized steel exterior frames, rated as fire-resistant, including weather stripping and stainless steel hardware.

.2 Metal components: hot dip galvanized sheet steel to ASTM A 653/A 653M, minimum thickness of bare metal to CSDMA, Table 1 - Thickness for Component Parts.

.3 Reinforced core: panels soldered to insulated core.

.1 Polyurethane core: rigid cellular modified polyisocyanurate boards, with a density of 32 kg/m³, to the CGSB 51-GP-21M Standard. Insulation meeting the thermal resistance rating (RSI) specified in the performance requirements.

.2 Strengthened around the edges every 150 mm.

.4 Finish

.1 Prefinished doors, with factory-applied facing. Colour to be determined with the CCG Representative and the professional on this project.

.5 Fabrication

.1 Doors and frames must be fabricated in accordance with CSDMA specifications.

.2 Doors and frames must be fabricated according the maximum front dimensions and profiles indicated.

.3 Doors and frames must be cut, strengthened, drilled and bored as needed to fit necessary mortised hardware using templates furnished by the finish fit hardware vendor. Frames must be strengthened as needed to fit surface-mounted hardware.

.4 Thermally broken doors must have an insulated core and the exterior components must be separated from the interior ones by a continuous rupture member with a lock seam.

.5 Thermally broken door frames must have a continuous rupture membrane with a lock seam that separates the exterior components from the interior

ones.

.6 The thermal break must be made of extruded rigid PVC to CGSB 41-GP-19Ma.

.7 Doors and frames must be insulated.

.2 Composite Doors (for entrance vestibules).

.1 Description: composite doors with weather strip and stainless steel hardware.

.2 Construction – flush doors: materials to Section 06 80 00 – Composite Fabrications.

.3 Stainless steel hardware.

.4 Simple locking mechanism in two different places, ideally of stainless steel or, if not, of galvanized steel.

.3 Hardware

.1 Locks and Bolts

.1 Reamed and pre-assembled locks and bolts to CAN/CGSB-69.17.

.2 Mortised locks and bolts to CAN/CGSB-69.29.

.3 Lever handles: design resistant to intensive use.

.4 Grade 1 mortise deadlock with thumbturn on interior side, SCHLAGE L460 model, in 630 satin-finished stainless steel. The cylinder must be compatible with MEDECO cylinders. The CCG will provide these MEDECO cylinders because they are from controlled keys. The Maker must install the cylinders before delivery of the shelters.

.5 Stainless steel hardware.

.2 Butts and hinges to CAN/CGSB-69.18.

.3 Emergency door openers to CAN/CGSB-69.19

.4 Door fittings (closers) to CAN/CGSB-69.20.

.5 Secondary locks and related products to CAN/CGSB-69.21.

.6 Other hardware to CAN/CGSB-69.32.

.1 Door stops.

.2 Noise attenuators.

.7 Thresholds: sized to full width of opening and conforming to barrier-free design requirements.

8 Weather stripping.

.1 Studs and lintel: extruded aluminum frame with seal.

.2 Door sweep: extruded aluminum frame with seal.

.9 Astragal to design requirements adapted to configuration of door.

.4 Sealants:

.1 Application conforming to manufacturer’s recommendations.

.2 Compatibility: Provide gaskets and other related materials that are compatible with each other and with the substrates applied in the service and application conditions set out in

these specifications.

.3 Choose a colour that matches the jointing materials.

.4 Choose sealants based on thermal expansion of the elements exposed to temperature variations.

.5 Choose sealants that exceed the elasticity and adhesion criteria described in the following standards: CAN/CGSB 19-GP-5M, CAN/CGSB 19-GP-14M, CAN/ONGC-19.13-M87 (category 25), CAN/ONGC-19.17-M90 and CAN/ONGC-19.24-M90.

3. EXECUTION

3.1 MANUFACTURER'S INSTRUCTIONS

.1 Compliance: comply with manufacturer's written requirements, recommendations and specifications, including available technical bulletins, instructions in product catalogues, instructions on product packaging, and product data sheets.

3.2 EXTERIOR SERVICE DOORS

.1 Galvanized Steel Doors.

.1 Install doors and frames in accordance with the CSDMA installation guide. Install templates for hardware and apply sealing according to manufacturer's instructions.

.2 Install components plumb, square and level and at the proper height.

.3 Attach anchors and connectors to adjacent structures so as not to impede thermal movement.

.4 Maintain the continuity of the thermal insulation and air and vapour seals.

.3 Composite Doors.

.1 Install doors and hardware in accordance with manufacturer's written instructions.

.2 Adjust hardware to operate properly.

.3 Once building has been constructed, readjust the doors and hardware and make sure they operate smoothly as planned.

.4 Sealants:

.1 Do not apply sealants to joint surfaces treated with sealer, curing compound, water repellent, or other coatings unless tests have been performed to ensure compatibility of materials. Remove coatings as required.

.2 Prepare surfaces in accordance with manufacturer's directions.

.3 Prime sides of joints in accordance with sealant manufacturer's instructions immediately prior to caulking.

.4 Apply bond breaker tape where required to manufacturer's

instructions.

.5 Install joint filler to achieve correct joint depth and shape, with approximately 30% compression.

.6 Apply sealant between door frames and contiguous elements of the building and the base of the threshold.

.7 Tool exposed surfaces before skinning begins to give slightly concave shape.

.8 Clean adjacent surfaces immediately and leave Work neat and clean.

.9 Remove excess and droppings, using recommended cleaners as work progresses.

.10 Remove masking tape after initial set of sealant.

.5 Adjust the weather stripping to ensure a tight seal.

.6 Adjust moving parts so that the doors operate smoothly.

3.3 FIELD QUALITY CONTROL

.1 Manufacturer's Inspection.

.1 Obtain written report from manufacturer confirming compliance of Work, in handling, installing, applying, protecting and cleaning of Work.

.2 Provide manufacturer's field services consisting of product use recommendations and periodic site visits for inspection of product installation in accordance with manufacturer's instructions.

END OF SECTION

1. GENERAL

1.1 RELATED REQUIREMENTS

.1 Section 2 06 10 00.01 – Rough Carpentry (Short Form)

.2 Section 06 71 00 – Structural Composite Shapes and Plates

.3 Section 06 80 00 - Composite Fabrications

1.2 REFERENCES

.1 National Building Code of Canada (NBC)

.2 American Society for Testing and Materials International (ASTM)
- .1 ASTM C 645-14, Standard Specification for Non-Structural Steel Framing Members
- .2 ASTM C754-14, Standard Specification for Installation of Steel Framing Members to Receive Screw-Attached Gypsum Panel Products
- .3 ASTM C 1047-14a, Standard Specification for Accessories for Gypsum Wallboard and Gypsum Veneer Base

.3 Canadian General Standards Board (CGSB)
- .1 CAN/CGSB-51.34-[M86 (R1998), Vapour Barrier, Polyethylene Sheet, for Use in Building Construction
- .2 CAN/CGSB-71. 25-[M88] Adhesive, for Bonding Drywall to Wood Framing and Metal Studs

.4 Underwriters Laboratories of Canada (ULC)
- .1 CAN/ULC-S101, Standard Methods of Fire Endurance Tests of Building Construction and Materials
- .2 CAN/ULC-S102, Standard Method of Test for Surface Burning Characteristics of Building Materials and Assemblies

1.3 DESIGN AND PERFORMANCE REQUIREMENTS

.1 Fire-Resistance in Survival Section
- .1 The assembly fire resistance rating must be based on tested assemblies from NBC, NRC, ULC or WH.
  - .1 Fire separation rated at least 1 hour for the partition separating the section with electronic equipment from the survival section; non-flammable materials; surface flame-spread rating of 25 or less and smoke development rating of 300 or less.
  - .2 Ensure that the interior door affixed to that wall maintains the necessary fire resistance. Employees who may be sleeping in the survival section must be properly protected.

.2 Plan for the use of an inert gas fire suppression system like NOVEC1230 in the generating-set shelter. The type of gas is yet to be confirmed.

.3 Interior partitions must enable the CCG to affix equipment, tools,

kitchen cabinets, bookcases, etc., anywhere on the walls. For an overview of how the walls will be used, refer to Annex E - Photographic Survey of Elements to Be Secured to Shelter Walls for the various sections of the shelters as well as the proposed inside fit-out drawing. The content of the inside fit-out drawing is for information purposes only.

.4 Selection of the interior partition type (composite or plywood boards and sheets) will be based on cost-efficiency and these design requirements.

1.4 SUBMITTALS FOR APPROVAL/ INFORMATION

.1 Provide submittals in accordance with Section 01 33 00 - SUBMITTAL PROCEDURES.

.2 Technical Data
- .1 Submit design data in accordance with Section 01 33 00 - SUBMITTAL PROCEDURES.
- .2 Provide product data and other details from the manufacturer's or vendor's specifications that can be used to describe the proposed products. Additionally, provide a document proving that the products in question conform to the relevant standards indicated in the performance criteria defined in Part 2 of this section.
- .3 Provide manufacturer’s recommendations on handling, storage, installation, or application of elements and products, as well as on protective measures and cleaning.

.3 Detail Drawings
- .1 Submit detail drawings to indicate elevations, partition modules, materials, components, finishes, doors, firestopping (where applicable), fastening to adjacent structures and assembly details.
- .2 The free height for the interior must be at least 2,875 mm.

.4 Closeout Submittals: Submit necessary maintenance data for incorporation into Building Management Manual (BMM).

.5 Samples
- .1 Submit two (2) samples of the proposed products for Work under this section, in accordance with Section 01 33 – SUBMITTAL PROCEDURES. The samples will allow the CCG Representative to choose the forms, patterns, textures and colours of surfaces among the product range of the manufacturer/vendor and, once examined and accepted, will become the standard of quality to which the Work will be held. One of the two samples submitted in each case will be returned with a mark indicating it has been accepted.

.6 Quality Assurance
- .1 Test Reports: Submit certified test reports from approved independent testing laboratories indicating compliance with

specifications for fire-rating.

1.5 QUALITY ASSURANCE

.1 Build mock-ups in accordance with Sections A0010 – GENERAL REQUIREMENTS and 01 45 00 – QUALITY CONTROL.

2. PRODUCTS

2.1 MATERIALS

.1 Interior Partitions – Select among the following assemblies:

.1 Wallboard Partitions on Steel Framing

.1 Post and structural member framing system: to ASTM C 645, fabricated using hot-dip galvanized sheet steel with a minimum thickness of 0.835 mm, allowing wall panels to be screwed in.

.2 Plywood sheathing to Section 06 10 00.01 or composite wall panels to Sections 06 71 00 and 06 80 00.

.2 Wallboard Partitions on Composite Framing

.1 Tube post framing: materials to Section 06 71 00.

.2 Plywood sheathing to Section 06 10 00.01 or composite wall panels to Sections 06 71 00 and 06 80 00.

3. Composite Sandwich Panel Partitions

.1 Comply with Section 06 80 00.

2.2 PERFORMANCE OF WORK

.1 Materials: Capable of meeting stipulated performance criteria; functionally compatible with adjacent materials and elements; conforming to minimum requirements and relevant standards cited in the following paragraphs of this section: 1.1 – RELATED REQUIREMENTS; 1.2 – REFERENCES; and 1.3 DESIGN AND PERFORMANCE REQUIREMENTS.

3. EXECUTION

3.1 MANUFACTURER'S INSTRUCTIONS

1. Comply with the manufacturer's written requirements, recommendations and specifications, including any available technical bulletin, concerning handling, storage, installation, adjustment, protection and cleaning of the supplied products and the structure created.

3.2 SOURCE QUALITY CONTROL

.1 Qualification of Installer/Vendor

.1 Obtain a qualification certificate provided by the manufacturer indicating that the installer holds at least five (5) years of experience with product installation.

3.3 APPLICATION

.1 Install interior partitions and accessories in accordance with manufacturer's written instructions, product data, reference standards and authorities having jurisdiction.

END OF SECTION

1. GENERAL

1.1 SUMMARY

.1 Section Includes
- .1 Materials, fabrication and performance criteria for prefabricated buildings.

.2 Related Requirements
- .1 Section B2020 – Exterior Windows
- .2 Section B2030 – Exterior Doors
- .3 Section C1010 – Interior Partitions
- .4 Section 06 10 00.01 – Rough Carpentry (Short Form)
- .5 Section 06 71 00 – Structural Composite Shapes and Plates
- .6 Section 06 80 00 - Composite Fabrications
- .7 Section 09 65 19 – Flooring
- .8 Section 09 70 00 – Resilient Flooring
- .9 Section 09 91 23 – Interior Painting

1.2 REFERENCES

.1 Justice Canada (JUS)
- .1 Canadian Environmental Protection Act (CEPA), 1999, c. 33.
- .2 Transportation of Dangerous Goods Act, 1992 (TDGA), c. 34.

.2 Health Canada/Workplace Hazardous Materials Information System (WHMIS).
- .1 Material Safety Data Sheets (MSDS).

.3 National Research Council of Canada (NRC) / Institute for Research in Construction (IRC)
- .1 Construction Technology Update, Number 9 - 1997, Evolution of Wall Design for Controlling Rain Penetration.
- .2 Construction Technology Update, Number 17 - 1998, Pressure Equalization in Rainscreen Wall Systems.
- .3 Construction Technology Update, Number 34 - 1999, Designing Exterior Walls According to the Rainscreen Principle.
- .4 National Building Code 2015 (NBC).

.4 Standards Council Of Canada
- .1 CAN/ULC-S101-04, Fire Endurance Tests of Building Construction and Materials.
- .2 CAN/ULC S102.2-10, Method of Test for Surface Burning Characteristics of Flooring, Floor Coverings, and Miscellaneous Materials and Assemblies.
- .3 CAN/ULC-S104-15, Standard Method for Fire Tests of Door Assemblies.

.5 Information on generating sets, goosenecks, etc.: refer to project drawings. The eight (8) goosenecks must be supplied, as must the four (4) steel anchor plates. Three must be affixed to the floor structure without compromising the tightness of the resilient flooring surface (ref: Section 09 70 00). The fourth will merely be placed on the ground in the workshop section.

.6 Electric toilet – Technical information available in Annex F.
- .1 The electric toilet was purchased by the CCG and its installation is part of this Contract.
- .2 The fabrication drawings must illustrate the location of the electric toilet as well as its pipes, openings in the walls and floor, etc., all of which must be approved by the CCG before fabrication of the shelter begins.

.7 Air exchanger – Technical information available in Annex G.
- .1 The air exchanger was purchased by the CCG and its installation is part of this Contract.
- .2 The fabrication drawings must illustrate the location of the air exchanger as well as its conduits, openings in the walls, etc., all of which must be approved by the CCG before fabrication of the shelter begins.

.8 CommScope and Roxtec CRL type cable entries – Technical information available in Annex H and in project drawings.

.9 Three insulated sleeves for generator exhaust outlets – capable of withstanding a temperature of 650°C (1200°F), details to be supplied after Contract award, around May 2019.

.10 Insulated and uninsulated sleeves for cables, conduits and pipes must be provided and installed in the locations indicated in the project drawings. Additional technical information available in Annex K.

.11 Master ground plate (double plate) to be supplied and installed in accordance with the information in Contract Drawings.

.12 Supply and install the cable troughs (150 x 150 mm) in both shelters based on indications in Contract Drawings.

1.3 SYSTEM DESCRIPTION

.1 Provide shelter and shed structure and enclosure to physical dimensions shown on the following drawings. Interior dimensions must be respected, including net height (distance between floor finish and ceiling finish: 2,875 mm). Finally, ensure that the exterior mass of the shelters does not pose a problem for land and marine transport of the shelters and sheds pursuant to current statutes, codes, standards, regulations and policies, notably those of the federal and provincial governments.

.2 Building occupancy as defined by National Building Code of Canada (NBC) is Group F, Division 3, Low-Hazard Industrial Occupancies.

.3 Generally, the shelters are intended to enclose:
- .1 Generating sets and workshop.
- .2 Electronic equipment and workshop.
- .3 A survival area with a room, electric toilet, meal area and kitchen cabinets (without a sink).
- .4 Although several components appear on the project drawings, not all are to be supplied. However, the Maker must understand the use for which the shelters and sheds are intended so that their design and fabrication can reflect that use.

.4 Three (3) sheds of which two (2) will be used for petroleum-related equipment and the other for electronic equipment maintenance.
- .1 Storage of petroleum products and/or spent oil, as well as equipment for filling tanks.
- .2 Storage for decontamination kit (ref. Annex A).
- .3 Storage for spare parts, industrial sweeping machine, etc,
- .4 Provide natural ventilation for all sheds.

.5 Goosenecks for air inlets and outlets:
- .1 Two (2) air inlets and four (4) air outlets for the generating-set shelter.
- .2 One (1) air inlet and one (1) air outlet for the electronics section.
- .3 One (1) air inlet and one (1) air outlet for the air exchanger in the survival section. One (1) vent for the toilet.
- .4 One (1) air inlet and one (1) air outlet for each shed (5 goosenecks).
- .5 All goosenecks must be detachable to facilitate various transport until the Heath Point site is reached and must be tight once affixed to the shelters and sheds.

.6 Six (6) composite entrance vestibules with corresponding doors. The doors on the entrance vestibules must be of the same size as those for the shelters but must be 75 mm wider for the sheds. All doors must open toward the outside on an angle of at least 90 degrees without contacting an obstacle (guardrails, in particular) and allow for easy access:
- .1 Four (4) entrance vestibules for the exterior entrances/exits of the shelters.

.2 Two (2) entrance vestibules for the sheds (only for petroleum equipments).

.7 One (1) entry for coaxial cables in the electronics shelter next to the existing outside cable tray system.

.8 Five conduit outlets in the electronics shelter and the generating-set shelter for electrical power supply (63 mm Ø).

.9 Three (3) outlets for the generators' exhaust pipes.

.10 Five outlets for the power supply conduits to the pumping station for the diesel and jet A tanks (63 mm Ø) and two 75 mm Ø outlets for the generators' diesel pipes.

.11 One outlet for cables from the charging rack in the generating-set shelter next to the double doors. This outlet must be installed so as to be accessible in the entrance vestibule corresponding to these doors.

.12 Three (3) outlets for outside lighting.

.13 Ground plates: One double plate must be supplied and installed under the coaxial cable entry in the electronics section and in a shed.

1.4 DESIGN CRITERIA

.1 The design of the system components must allow thermal expansion of components exposed to temperature differences of 70°C in order to prevent deformation, breaks in seals, needless loading of fastening devices and damage from other causes.

.2 Ensure total absence of condensation on interior surfaces of shelters under following minimum conditions:
- .1 Interior: 24°C, 30% RH, still air;
- .2 Exterior: -30°C in 60 km/h wind.

.3 Ensure that the shelters and sheds are weathertight against inclement weather and the weather conditions specific to Heath Point, Anticosti Island.

.4 Provide for positive drainage of condensation occurring within wall construction and water entering at joints, to exterior face of wall in accordance with "Rain Screen Principles", as described by NRC/IRC.

.5 Vapour seal shelter enclosure to withstand, without failure, design RH at design ambient temperature condition, maintained against interior atmospheric pressure of 250 Pa.

.6 Design shelters to NBC for load calculations, based on their respective locations.
- .1 In addition to uniform live load, design for full live load on leeward half of building frame and zero live load on

windward half.

.2 Factor in loads from snow and rain on roof with the wind coefficient, slope coefficient (brooming) and accumulation coefficient.

.7 Design shelter enclosure structure to accommodate, by means of expansion joints, movement in wall and structural movements without permanent distortion, damage to infills, racking of joints, breakage of seals, water penetration or glass breakage.

.8 Design, assemble and secure building elements to shelter frame to ensure stresses in sealants and seals are within sealant manufacturer's recommended maximum.

.9 Design shelter components to comply with thermal resistance values under the NBC.

.10 Design shelter assembly to permit easy replacement and disassembly of components.

.11 Allow for ceiling, piping, conduit and other interior dead loads imposed on this structure, including generating sets and their vibrations during operation and start-up.

.12 Allow for dead loads to be suspended from ceiling, particularly in the electronics shelter.

.1 The cable tray system in the electronics section must be 305 mm (12 inches) wide by 102 mm (4 inches) high with a bar every 152 mm (6 inches) and in 3 m long sections. T&B model: AH1412L06-3.

.1 The cable tray system must be secured in two directions. Provide the ceiling reinforcement and fastening strips necessary for its future installation.

.13 Access units, doors, and windows to sizes and locations indicated. These components must also be weatherproof, insulated and weatherstripped. Ensure that the fire-rated door between the survival and electronics sections is fire-rated for at least one (1) hour, to CAN/ULC-S104, and meets the recommendations of the professional in charge of shelter and shed design.

.14 Design assemblies for survival shelter components to fire and smoke separation requirements.

.1 Fire separations a minimum of one (1) hour.

.15 Ensure a minimum free height inside shelters (from flooring finish to ceiling finish) of 2,875 mm.

.16 Design floor of generating-set shelter so that a containment basin that is 50 mm in height from the base of door thresholds on the inside is created throughout the shelter. On the walls, the migration of the liquid membrane must be 100 mm. Provide and apply flooring to Section 09 70 00 – RESILIENT FLOORING.

.17 Ensure that wall edges and joints are at least 300 mm from any openings (doors, windows, inlets, outlets, goosenecks, and vents).

.18 Provide the positioning of the planned equipment and design the compatible anchoring systems or interface base to withstand the specified loads.

.19 Provide jacking/hoisting locations for handling and for road and marine transport to the Lévis and Heath Point sites based on the weight of the shelters with installed accessories and all the electrical supply and distribution, furnishings and kitchen furniture, including cabinets and counters. Most of these elements will be installed by the general manufacturer rather than the Maker for this project. Refer to Annex C for the list of elements to be supplied and installed in the fabrication project.

.20 Provide jacking/hoisting points and methods of fastening the structures to the foundations for temporary storage of the shelters and sheds in Lévis as well as for their final installation at Heath Point. Adjust the foundation anchor points so that the generating-set shelter is lower in consideration of the containment basin.

.21 Sheds:

.1 Dimensions conforming to the Contract Drawings.

.2 Three sheds:

.1 One with double doors that are raised with respect to the walkway so that the 1.2 m x 1.2 m *Justrite* containment basin, or an equivalent one, can be laid on the floor and so that upper surface is at the same level as the door to facilitate handling of 205 L (45 gal) barrels.

.2 The other with a standard door fitted out to be compatible with the content of the decontamination kit (subject to Annex H as a reference), also with containment basin and tablets.

.3 Electronic equipments parts: tablet, standard door and no containment basin.

.3 The doors of the entrance vestibule must be 75 mm wider so the shed doors can open to at least 90 degrees.

.4 Provide an interior finish so that accessories can be hung (for nailing, screwing).

.5 Provide two 400 mm deep shelves in each shed. These must be soundly secured.

.6 The roof may be sloped where the highest point would be equal to the shelter roof and the lowest point must not be less than 2.5 m.

.7 Provide natural adequate ventilation in each shed with an inlet and outlet without compromising tightness (to snow and water). Three goosenecks are required.

.22 Design entrance vestibules and corresponding doors conforming to Sections 06 80 00 – COMPOSITE FABRICATIONS and B2030 –

EXTERIOR DOORS, with stainless steel hardware.

.23 Design goosenecks for the air inlets and outlets with materials conforming to Section 06 80 00. Design the shelter–gooseneck assemblies so that these can be assembled and dismantled, in order to make transport easier.

.24 Provide the cable entry opening in the electronics section to accept the following cable connection systems: Roxtec CRL (4 in. in diameter) and CommScope 204673-8 (with eight (8) entrances).

.25 Provide openings for electrical line inlets and outlets between the shelters, an outside power outlet and luminaires, diesel pipes and electrical power for the tanks.

.26 Use water-repellent and rot-proof materials for all structural and cladding components of the shelters, sheds and accessories.

.27 Provide an interior finish so that accessories can be hung in each shelter (for nailing, screwing). This may be a framing or other system that allows for mechanical hanging every 200 or 250 mm (vertically and horizontally). Plywood can also be used as long as the composition of the firewall factors in this finish.

.28 Supply and install insulated and uninsulated sleeves in the cable troughs.

.29 All design parameters must explicitly appear on the first page of the set of drawings, signed and stamped, including load at the supports, as well as a table of parts with their weight and mass. This information will be used for land and marine transport and for installation.

.30 Everything must be designed by an architect or an engineer licensed in Canada and all documents must signed and stamped.

1.5 PERFORMANCE REQUIREMENTS

.1 The shelters must have an air and vapour seal system and a continuous, complementary and compatible thermal insulation system.

.2 The shelter enclosures must include an outer and inner siding, an air and vapour barrier system and thermal insulation.

.1 Components must be sturdy enough to serve as an interior finish.

.3 Shelter walls and their components must be designed so that there is as little air infiltration as possible caused by the dynamic pressure from air on the exterior walls including windows, glazing, doors and other interruptions in airtightness. When subjected to a differential pressure of 75 Pa, the airtightness system must not show an infiltration rate greater than 0.01 L/s/m².

.4 Shelter walls and their components must be designed so that there is as little air infiltration as possible caused by the static pressure from air on the exterior walls including windows, glazing, doors and other interruptions in airtightness. When subjected to one hour of wind pressure with an occurrence of once in 10 years, under the NBC, the airtightness system must not show an infiltration rate greater than 0.01 L/s/m².

.5 There must be no break in the materials or seals.

.6 The walls must permit thermal movement of the components caused by temperature variations within a range of -30 to 40 degrees Celsius without buckling, rupture of seals, abnormal stress to fastenings, or any other harmful effects.

.7 Expansion joints must be made to accommodate play in the wall system and between the walls and shelter frame caused by shifting of the frame and dynamic loads on the members and thus prevent such damage as permanent warping of members, cracks in joints and deterioration of fillers (joint backing), breakage of seals and water infiltration.

.8 Framing elements must be designed to withstand permanent loads and wind load calculated in accordance with the National Building Code of Canada (NBC) so that deflection does not exceed [1/360] of the span.

.9 Watertightness: the exterior of the facade and the wall panels must be designed in keeping with the rainscreen principle defined by the National Research Council of Canada and must prevent water infiltration into the interior systems.

.10 Ensure that condensation which forms inside the walls and rainwater which penetrates through joints is effectively channelled to the outer surface of the walls, in keeping with the rainscreen principle defined by the NRC's Institute for Research in Construction (IRC). Water channelled to the outer surface must not damage the finish, nor must it cause puddles or icicles to form.

.11 Ensure total absence of condensation on interior surfaces of shelters under following conditions:
- .1 Interior: temperature of 24 degrees Celsius, 30% relative humidity, still air.
- .2 Exterior: temperature of -30 degrees Celsius, 60 km/h wind.

.12 Shelter enclosures must be sufficiently sealed against vapour to withstand, without failing, the relative humidity used for the design, at the ambient temperature used for the design, when the inside atmospheric pressure is 250 Pa.

.13 All shelter walls, ceilings and floors must have thermal resistance ratings conforming to the NBC.

.14 Transfer through the walls must not exceed 3 ng/ Pa.s.m².

.15 Maximum deflection for roofing under full specified live load: 1/360 of clear span.

.16 Maintain following tolerances for shelter structure and enclosure elements.
- .1 Maximum variation from plane or location shown on shop drawings: 1 mm/1 m of length.
- .2 Maximum offset from true alignment between two adjacent members abutting end to end, in line: 1 mm.

.17 Sealants
- .1 Select sealing products based on conditions in the location where the products are to be used; carefully follow the manufacturer's instructions for applying the product.
- .2 Sealing products must not be used to mask or rectify errors, design flaws or manufacturing defects.
- .3 The colour of the sealing product must match the colour of the adjacent surfaces. Provide sealant resistant to ultra-violet degradation or fading.

.18 Floors
- .1 Maximum deflection for the joists/beams or sandwich panels subject to specific excess loads is 1/360 of the span.
- .2 Floors must be designed to bear the specific weight of the planned mechanical equipment, but the uniform dead loads must not be less than 3.6 kPa greater than the self-weight of the floor.
- .3 Bases and other mounting pads must be provided for the mechanical equipment, as well as sleeves for cable glands, cable trays and other integrated mechanical and electrical devices.
- .4 The construction must reduce vibrations from mechanical equipment.
- .5 Design the floors of the generating-set shelter to bear a load of 1,500 kg per generating set, excluding the steel anchor plates. Consider the presence of a fourth generating set in the workshop section.

.19 Construction Elements to Counter Lateral and Vertical Stress
- .1 Interior walls must neither be weight-bearing nor intended to resist lateral stress so that the building can be subsequently altered, where necessary.
- .2 Exterior walls must be designed so that the planned openings can be made.
- .3 Reinforcing elements must be installed in the walls to allow for mounting of elements or equipment and fit-out of openings.
- .4 Lateral stress from wind and earthquakes must be countered by braced framing all around the shelters or

using a moment connection structure built into the walls.

.20 Fire and Smoke Separation for the Survival Shelter

.1 The assembly fire resistance rating must be based on tested assemblies from NBC, NRC, ULC or WH.

.2 Asbestos-free materials and systems combined with tested assemblies approved by competent authorities must provide effective protection against the spread of fire, smoke and fumes, the water used for fire suppression and, when designed for that purpose, against the spread of fluids.

.3 The materials and systems used must provide a fire rating (increase in temperature and flame propagation) at least equal to the fire rating of the walls, floors and other nearby structures.

.4 The design of combined or composite systems must reflect the technical restrictions and assessments associated with the ULC, FM or WH systems that have been approved by the competent authorities.

.1 The materials and systems used must provide a fire rating (increase in temperature and flame propagation) conforming to that indicated in the NBC and protect against the spread of flames, smoke and fumes.

.5 The putties and sealants used for horizontal and vertical joints must be self-smoothing and of a type that will not collapse.

.6 Products must have a compressive strength that enables them to maintain their integrity based on ULC tests on vertical surfaces and must also provide support for openings in floors.

.7 The products used must be compatible with waterproofing membranes and with dissimilar coatings and finishes covering the adjacent floors, walls and ceilings.

.8 Interior partitions conforming to Section C1010.

.21 Consider that a NOVEC1230 type fire suppression system will be installed in the generating-set area. The Maker is not required to supply or install this system. However, the shelter must be perfectly tight in order for that system to be efficient. The Maker must hire and pay a specialized firm to conduct tightness tests.

.22 VOC measurements for styrene must not exceed five (5) ppm in the survival area (shelter for survival purposes and electronic equipment).

1.6 SUBMITTALS FOR APPROVAL/ INFORMATION

.1 Provide submittals in accordance with Section 01 33 00 - SUBMITTAL PROCEDURES.

.2 Technical Data

.1 Submit technical data required for the following.
  .1 Sealants.
  .2 Sealing tape.
  .3 Adhesives.
  .4 Prefabricated joints.
.2 Specify the instructions for application of caulks and sealing tape.

.3 Submit shop drawings stamped and signed by a qualified engineer or architect licensed in Canada, for assemblies, components and connections designed by Maker. A statement to this effect may be included on drawings.

.5 Indicate plans and grid lines, structural members and connection details, bearing and anchorage details, roof cladding, wall cladding, framed openings, accessories, schedule of materials and finishes, camber and loadings, and fasteners.

.6 Indicate detailed description and location of mechanical, electrical and other systems in Work.

.7 Describe requirements of other systems of components related to this Work but provided by others.
  .1 Obtain the information needed to describe the work in question in an appropriate manner, including details of the placement of and constraints on these components.

.8 Submit erection drawings to CCG Representative for approval, before fabrication.

.9 Indicate erection dimensions and methods.

.10 Manufacturer's inspection reports: Submit to the CCG Representative the manufacturer's written reports within three (3) days of the date of inspecting the Work for compliance, as indicated in paragraph 3.2 – FIELD QUALITY CONTROL of PART 3 – EXECUTION.

1.7 QUALITY ASSURANCE

.1 Shop meetings: When services supplied by the Maker encompass quality control for the Work, as indicated in paragraph 3.2 – FIELD QUALITY CONTROL of PART 3 – EXECUTION, plan shop visits at the following stages:
  .1 After delivery and storage of products, and when preparatory Work is complete, but before installation begins.
  .2 Twice during progress of Work, at 25% and 60% completion.
  .3 Once Work is complete, tightness tests of both shelters before delivery from the shop to the Lévis site.
  .4 Provisional and final acceptance at the CCG site in Lévis.

.2 The CCG reserves the right to conduct inspections at any time

during the preparatory work and during fabrication of the shelters, sheds and accessories as well as during delivery.

2. PRODUCTS

2.1 MATERIALS

.1 Construction materials: conforming to Sections:
- .1 06 10 00.01 – ROUGH CARPENTRY (Short Form)
- .2 06 71 00 – STRUCTURAL COMPOSITE SHAPES AND PLATES
- .3 06 80 00 – COMPOSITE FABRICATIONS
- .4 09 21 16 – GYPSUM BOARD ASSEMBLIES
- .5 09 65 19 – FLOORING
- .6 09 70 00 – RESILIENT FLOORING
- .7 09 91 23 – INTERIOR PAINTING

.2 Windows: conforming to Section B2020.

.3 Doors: conforming to Section B2030.

.4 Interior Partitions: conforming to Section C1010.

.5 Sealants:
- .1 Application conforming to manufacturer's recommendations.
- .2 Compatibility: Provide gaskets and other related materials that are compatible with each other and with the substrates applied in the service and application conditions set out in these specifications.
- .3 Choose a colour that matches the jointing materials.
- .4 Choose sealants based on thermal expansion of the elements exposed to temperature variations.
- .5 Choose sealants that exceed the elasticity and adhesion criteria described in the following standards: CAN/CGSB 19-GP-5M, CAN/CGSB 19-GP-14M, CAN/ONGC-19.13-M87 (category 25), CAN/ONGC-19.17-M90 and CAN/ONGC-19.24-M90.

2.2 ASSEMBLY

.1 Maintain air, vapour and thermal barrier throughout shelter enclosure elements.

.2 Complete envelope assembly with exterior skin, glass units, access units, air/vapour seal system, thermal insulation and interior finish.

.3 Accurately fit and rigidly frame together joints, corners and mitres.
- .1 Match components carefully to produce continuity of line and design.
- .2 Make joints and connections toward exterior weathertight.
- .3 Provide hairline joints for materials in contact.

.4 Co-ordinate location of visible joints.

2.3 FINISHES

.1 Interior Finish:
- .1 Colour: Pale, white, beige or grey shades. Present colours and CCG Representative will make final choice.
- .2 Finish: easy-to-clean semi-gloss.
- .3 Floors: slip-resistant.
- .4 Floors of shelter for generating sets and survival conforming to Section 09 70 00 – RESILIENT FLOORING.
- .5 Antistatic floor for the electronics section conforming to Section 09 65 19 – FLOORING.

.2 Exterior Finish
- .1 Submit finish for approval by CCG Representative.
- .2 Finish: semi-gloss.
- .3 Colour: White.
  - .1 With bright yellow strips at the junction between walls and roofs. This strip, in the vertical and horizontal axes, must be at least 200 mm each and be found all around the shelters.

3. EXECUTION

3.1 VENDOR'S INSTRUCTIONS

1. Comply with the vendor's written requirements, recommendations and specifications, including any available technical bulletin, concerning handling, storage, installation, adjustment, protection and cleaning of the supplied products and the structure created.

3.2 FIELD QUALITY CONTROL

.1 Vendor Field Inspections.
- .1 Obtain vendor's written reports under this section certifying that the Work is compliant as regards handling, installation, application, protection and cleaning, and submit reports on field services, as indicated in paragraph 1.6 – SUBMITTALS FOR APPROVAL/ INFORMATION in PART 1.
- .2 Hire vendor's field services consisting of product use recommendations and periodic site visits for inspection of product installation in accordance with vendor instructions.
- .3 Plan for shop visits to inspect Work as indicated in PART 1 under the QUALITY ASSURANCE paragraph.

.2 Qualification of Installer/Vendor
- .1 Obtain a qualification certificate provided by the manufacturer indicating that the installer holds at least five

(5) years of experience with product installation.

3.3 CLEANING

.1 Remove excess sealant by moderate use of low VOC mineral spirits or other solvent as directed by sealant vendor.

.2 Clean surfaces.

3.4 PROTECTION

.1 Provide protection to finished surfaces with strippable coatings, strippable wrappers, plywood or sheet materials as required before acceptance of Work.

END OF SECTION

1. GENERAL

1.1 RELATED SECTIONS

.1 This section is general in nature and presents information that may be related to all sections of the tender document.

1.2 REFERENCES

.1 AutoCAD Standard, Computer-Aided Design and Drafting Protocol (Fisheries and Oceans Canada).found in Annex D.

1.3 ADMINISTRATIVE CONSIDERATIONS

.1 Submit to CCG Representative submittals listed for review. Submit promptly and in orderly sequence to not cause delay in Work. Failure to submit in ample time is not considered sufficient reason for extension of Contract Time and no claim for extension by reason of such default will be allowed.

.2 Do not proceed with Work affected by requirement to submit documents and samples until review of all parts is complete.

.3 Present shop drawings, product data, samples and mock-ups in metric units (SI).

.4 Where items or information is not produced in metric units (SI), converted values are acceptable.

.5 Documents must be reviewed and samples must be examined before they are submitted to the CCG Representative. Such preliminary review and examination constitute confirmation by Maker that the requirements applicable to the work have been or will be determined and verified and that every document and sample submitted has been reviewed or examined and found to conform to the work requirements and Contract Documents. Submittals not stamped, signed, dated and identified as to specific project will be returned without being examined and considered rejected.

.6 At the time the documents and samples are submitted, the CCG Representative must be informed in writing of any discrepancies between the documents and samples and the requirements set out in the Contract Documents, and reasons for the discrepancies must be given.

.7 Verify field measurements and affected adjacent Work are co-ordinated.

.8 The fact that the documents and samples submitted are being examined by the CCG Representative does not relieve the Maker in any way of its obligation to submit complete and accurate items.

.9 Maker's responsibility for deviations in submission from requirements of Contract Documents is not relieved by CCG Representative's

review.

.10 Keep one reviewed copy of each submission at fabrication site.

1.3 SHOP DRAWINGS AND PRODUCT DATA

.1 The term "shop drawings" means drawings, diagrams, illustrations, schedules, performance charts, brochures and other data which are to be provided by Maker to illustrate details of a portion of Work.

.2 Submit shop drawings bearing stamp and signature of qualified professional engineer or architect registered or licensed in Canada.

.3 Indicate materials, methods of construction and attachment or anchorage, erection diagrams, connections, explanatory notes and other information necessary for completion of Work. Where articles or equipment attach or connect to other articles or equipment, indicate that such items have been co-ordinated, regardless of Section under which adjacent items will be supplied and installed. Indicate cross references to design drawings and specifications.

4. All shop drawings for shelters and sheds, entrance vestibules and goosenecks must be must submitted when 50%, 95% and 100% complete for comment by the CCG Representative.

.5 Allow 10 days for the CCG Representative's review of each submission.

.6 Adjustments made on shop drawings by the CCG Representative are not intended to change Contract Price. If adjustments affect value of Work, state such in writing to the CCG Representative prior to proceeding with Work.

.7 The Maker must make the changes to the shop drawings requested by the CCG Representative in accordance with the requirements set out in the Contract Documents. When resubmitting, notify the CCG Representative in writing of revisions other than those requested.

.8 Accompany each submission with transmittal letter containing:
- .1 date;
- .2 project name and number;
- .3 name and address of the Maker;
- .4 identification and quantity of each shop drawing, product data and sample;
- .5 other pertinent data.

.9 Submittals include:
- .1 date of production and dates of revisions;
- .2 project name and number;
- .3 name and address of:
  - .1 subcontractor;
  - .2 vendor;
  - .3 Maker;
- .4 Maker’s stamp, signed by the Maker’s designated

representative certifying that the documents submitted are approved, that the measurements taken on site have been verified and that everything meets the requirements set out in the Contract Documents;

.5 pertinent details of the portions of work concerned:

.1 fabrication details and materials;

.2 layout or configuration, with dimensions, including dimensions measured on site, as well as leeway and clearances;

.3 assembly and adjustment details;

.4 performance characteristics;

.5 reference standards;

.6 operating weight;

.7 wiring diagrams;

.8 single line and schematic diagrams;

.9 relationship to adjacent work.

.10 After the CCG Representative's review, distribute copies of shop drawings and product data.

.11 Submit two (2) electronic copies of the shop drawings required under the technical sections of the specifications and in accordance with the requirements of the CCG Representative: one signed and stamped PDF version and the other an unsigned AutoCAD version conforming to the reference standard.

.12 Submit one electronic copy of product data sheets or manufacturer's documentation requested in specification sections and as requested by CCG Representative where shop drawings will not be prepared due to standardized manufacture of product.

. 13 Submit one (1) electronic copy of the test reports prescribed in the technical sections of the specifications and as required by the CCG Representative.

.1 Report signed by authorized official of testing laboratory that material, product or system identical to material, product or system to be provided has been tested in accordance with specified requirements.

.2 Testing must have been within 3 years of date of Contract award for project.

.14 Submit one (1) electronic copy of the certificates required in the technical sections of the specifications and as required by the CCG Representative.

.1 Statements printed on manufacturer's letterhead and signed by responsible officials of manufacturer of product, system or material attesting that product, system or material meets specification requirements.

.2 Certificates must be dated after award of project Contract complete with project name.

.15 Submit one (1) electronic copy of manufacturer's instructions, as prescribed in the technical sections of the specifications and required

by the CCG Representative.

.1 Pre-printed material describing installation of product, system or material, including special notices and Material Safety Data Sheets concerning impedances, hazards and safety precautions.

.16 Submit one (1) electronic copy of manufacturer's field testing reports, as prescribed in the technical sections of the specifications and required by the CCG Representative.

.1 Documentation of the testing and verification actions taken by the manufacturer's representative to confirm compliance of installed products, materials, equipment or systems with the manufacturer's instructions.

.17 Submit one (1) electronic copy of the operation and maintenance data, as prescribed in the technical sections of the specifications and required by the CCG Representative.

.18 Delete information not applicable to project.

.19 Supplement standard information to provide details applicable to project.

.20 If upon review by CCG Representative, no errors or omissions are discovered or if only minor corrections are made, fabrication and supply may proceed. If shop drawings are rejected, noted copy to be returned and resubmission of corrected shop drawings, through same procedure indicated above, must be performed before fabrication and installation of Work may proceed.

.15 The review of shop drawings by Public Services and Procurement Canada (PSPC) is for sole purpose of ascertaining conformance with general concept.

.1 This review must not mean that PSPC approves detail design inherent in shop drawings, responsibility for which must remain with Maker submitting same, and such review must not relieve Maker of responsibility for errors or omissions in shop drawings or of responsibility for meeting requirements of construction and Contract Documents.

.2 Without restricting generality of foregoing, Maker is responsible for dimensions to be confirmed and correlated at job site, for information that pertains solely to fabrication processes or to techniques of construction and installation and for co-ordination of Work of sub-trades.

1.4 SAMPLES

.1 Submit for review samples in duplicate as requested in respective specification sections. Label samples with origin and intended use.

.2 The Maker must send the samples prepaid to the office of the CCG Representative.

.3 Notify the CCG Representative in writing, at time of submission of

deviations in samples from requirements of Contract Documents.

.4 Where colour, pattern or texture is criterion, submit full range of samples.

.5 Adjustments made on samples by the CCG Representative are not intended to change Contract Price. If adjustments affect value of Work, state such in writing to the CCG Representative prior to proceeding with Work.

.6 Make changes in samples which the CCG Representative may require, consistent with Contract Documents.

.7 Reviewed and accepted samples will become standard of workmanship and material against which installed work will be verified.

1.5 MOCK-UPS

.1 Construct mock-up in accordance with Section 01 45 00 – QUALITY CONTROL.

END OF SECTION

1. GENERAL

1.1 RELATED REQUIREMENTS

.1 This section is general in nature and presents information that may be related to all sections of the tender document.

1.2 INSPECTION

.1 Allow CCG Representative access to Work at all times. If part of Work is in preparation at locations other than fabrication shop, allow access to such Work whenever it is in progress.

.2 Give timely notice requesting inspection if Work is designated for special tests, inspections or approvals by CCG Representative's instructions, or law of Place of Work. The Maker is entirely responsible for co-ordinating and paying the specialized firms for conducting tightness tests on the two shelters and for all other inspections designated elsewhere in Contract Documents.

.3 If Maker covers or permits to be covered Work that has been designated for special tests, inspections or approvals before such is made, uncover such Work, have inspections or tests satisfactorily completed and make good such Work.

.4 CCG Representative may order any part of Work to be examined if Work is suspected to be not in accordance with Contract Documents. If, upon examination such work is found not in accordance with Contract Documents, the Maker must correct such Work and pay cost of examination and correction. If such Work is found in accordance with Contract Documents, CCG Representative will pay cost of examination and replacement.

1.3 INDEPENDENT INSPECTION AGENCIES

.1 Independent Inspection/Testing Agencies other than those identified as being the Maker's responsibility will be engaged by CCG Representative. The cost of such services will then be covered by the CCG Representative, except in the following cases:

.1 Inspection and testing required by laws, ordinances, rules, regulations or orders of public authorities.
.2 Inspection and testing performed exclusively for Maker's convenience.
.3 Testing, adjustment and adjustment of conveying systems and mechanical and electrical equipment and systems.
.4 Shop tests and certificates of compliance.
.5 Tests specified to be carried out by Maker under the supervision of CCG Representative.
.6 Tightness tests for the two shelters described in A0010 – GENERAL REQUIREMENTS.

.2 Provide equipment required for executing inspection and testing by appointed agencies.

.3 Employment of inspection/testing agencies does not relax responsibility to perform Work in accordance with Contract Documents.

.4 If defects are revealed during inspection and/or testing, appointed agency will request additional inspection and/or testing to ascertain full degree of defect. Correct defect and irregularities as advised by CCG Representative at no cost to CCG Representative. Pay costs for retesting and re-inspection.

1.4 ACCESS TO FABRICATION SITE

.1 Allow inspection/testing agencies access to manufacturing and fabrication plants.

.2 Co-operate to provide reasonable facilities for such access.

1.5 PROCEDURES

.1 Notify appropriate agency and CCG Representative in advance of requirement for tests, in order that attendance arrangements can be made.

.2 Submit samples and/or materials required for testing, as specifically requested in specifications. Submit with reasonable promptness and in orderly sequence to not cause delays in Work.

.3 Provide labour and facilities to obtain and handle samples and materials at fabrication site. Provide sufficient space to store test samples.

1.6 REJECTED WORK

.1 Remove defective Work, whether as the result of poor workmanship, use of defective products or damage and whether incorporated in Work or not, which has been rejected by CCG Representative as failing to conform to Contract Documents. Replace or re-execute in accordance with Contract Documents.

.2 If in opinion of CCG Representative it is not expedient to correct defective Work or Work not performed in accordance with Contract Documents, CCG Representative will deduct from Contract Price difference in value between Work performed and that called for by Contract Documents, amount of which will be determined by CCG Representative.

1.7 REPORTS

.1 Submit one (1) copy of inspection and test reports to CCG Representative.

1.8 TESTS AND MIX DESIGNS

.1 Make available to the CCG Representative the test and mix design reports required or prepared by the Maker (mixes for resin, caulks, adhesives, etc.).

.2 The cost of tests and mix designs beyond those called for in Contract

Documents or beyond those required by law of Place of Work must be appraised by the CCG Representative.

1.9 MOCK-UPS

.1 Prepare mock-ups specifically requested in specifications. Include for Work of sections required to provide mock-ups.

.2 Fabricate mock-ups in the different locations approved by the CCG Representative and designated in the section concerned.

.3 Prepare mock-ups for CCG Representative's review with reasonable promptness and in an orderly sequence, so as not to cause any delay in Work.

.4 Failure to prepare mock-ups in ample time is not considered sufficient reason for an extension of Contract Time and no claim for extension by reason of such default will be allowed.

.5 Specification section identifies whether mock-up may remain as part of Work or if it is to be removed and when.

1.10 SHOP TESTING

.1 Submit shop test certificates as required under specification sections.

END OF SECTION

1. GENERAL

1.1 RELATED REQUIREMENTS

.1 This section is general in nature and presents information that may be related to all sections of the tender document.

1.2 REFERENCES

.1 Within text of each specifications section, reference may be made to reference standards.

.2 If there is question as to whether products or systems are in conformance with applicable standards, CCG Representative reserves right to have such products or systems tested to prove or disprove conformance. These tests are the responsibility of the Maker.

1.3 QUALITY

.1 Products, materials, equipment and articles incorporated in Work must be new, not damaged or defective, and of best quality for purpose intended. If requested, furnish evidence as to type, source and quality of products provided.

.2 Procurement policy is to acquire, in cost effective manner, items containing highest percentage of recycled and recovered materials practicable consistent with maintaining satisfactory levels of competition. Make reasonable efforts to use recycled and recovered materials and in otherwise utilizing recycled and recovered materials in execution of work.

.3 Products found to be defective before the Work is completed, within five years of the date of provisional acceptance at the CCG site in Lévis, will be refused, regardless of the conclusions of prior inspections. Inspection does not relieve the Maker of its responsibility, but is simply a precaution against oversight or error. The Maker must remove and replace defective products at its own expense and be responsible for the resulting delays and expenses.

.4 Should disputes arise as to quality or fitness of products, decision rests strictly with CCG Representative based upon requirements of Contract Documents.

.5 Unless otherwise indicated in specifications, maintain uniformity of manufacture for any particular or like item throughout building.

.6 Permanent labels, trademarks and nameplates on products are not acceptable in prominent locations, except where required for operating instructions, or when located in mechanical or electrical rooms.

1.4 AVAILABILITY

.1 In event of failure to notify CCG Representative at commencement of Work and should it subsequently appear that Work may be delayed for such reason, CCG Representative reserves right to substitute more readily available products of similar character, at no increase in Contract Price or Contract Time.

1.5 STORAGE, HANDLING AND PROTECTION

.1 Handle and store products in manner to prevent damage, adulteration, deterioration and soiling and in accordance with vendor's instructions when applicable.

.2 Store packaged or bundled products in original and undamaged condition with vendor's seal and labels intact. Do not remove from packaging or bundling until required in Work.

.3 Store products subject to damage from weather in weatherproof enclosures.

.4 Mineral fillers for incorporation into mortar, slurry or sealants must remain dry and clean. Store on wooden platforms and cover with waterproof tarpaulins during inclement weather.

.5 Store and mix paints, gel and resin coating in heated and ventilated room. Remove rags soaked with flammable substances and other combustible debris from site daily. Take every precaution necessary to prevent spontaneous combustion.

.6 Remove and replace damaged products at own expense and to satisfaction of CCG Representative.

.7 Touch up damaged factory finished surfaces to CCG Representative's satisfaction. Use touch-up materials to match original. Do not paint over name plates.

.8 Provide the protections necessary for storage of all components at the Lévis site for a period of two (2) years.

1.6 TRANSPORTATION

.1 Pay costs of transportation of products required in performance of Work.

1.7 MANUFACTURER'S INSTRUCTIONS

.1 Unless otherwise indicated in specifications, install, fabricate or erect products in accordance with manufacturer's instructions. Do not rely on labels or enclosure provided with products. Obtain written instructions directly from manufacturer.

.2 Notify CCG Representative in writing of conflicts between specifications and manufacturer's instructions, so that CCG Representative will establish course of action.

.3 Improper installation or erection of products, due to failure in complying with these requirements, authorizes CCG Representative to require removal and re-installation at no increase in Contract Price or Contract Time.

1.8 QUALITY OF WORK

.1 The Work must be of the highest possible quality, executed by workers experienced and skilled in their respective trades. Immediately notify CCG Representative if required Work is such as to make it impractical to produce required results.

.2 Do not employ anyone unskilled in their required duties. The CCG Representative reserves right to require dismissal of workers deemed incompetent or careless.

.3 Decisions as to standard or fitness of Quality of Work in cases of dispute rest solely with CCG Representative, whose decision is final.

1.9 LOCATION OF FIXTURES

.1 Inform CCG Representative of conflicting installation. Install as directed.

1.10 FASTENINGS – GENERAL

.1 Provide metal fastenings and accessories in same texture, colour and finish as adjacent materials, unless indicated otherwise, except where stainless steel fastenings are used.

.2 Prevent electrolytic action between dissimilar metals and materials.

.3 Use non-corrosive steel fasteners and anchors for securing exterior work, unless stainless steel or other material is specifically requested in affected specification Section.

.4 Space anchors within individual load limit or shear capacity and ensure they provide positive permanent anchorage. Wood plugs or plugs made of any other organic material are not acceptable.

.5 Keep exposed fastenings to a minimum, space evenly and install neatly.

.6 Fastenings which cause spalling or cracking of material to which anchorage is made are not acceptable.

1.11 FASTENINGS – EQUIPMENT

.1 Use fastenings of standard commercial sizes and patterns with material and finish suitable for service.

.2 Use heavy hexagon heads, semi-finished unless otherwise specified. Use No. 304 stainless steel for exterior areas.

.3 Bolts may not project more than one diameter beyond nuts.

.4 Use plain type washers on equipment, sheet metal and soft gasket lock type washers where vibrations occur. Use resilient washers with stainless steel.

1.12 PROTECTION OF WORK IN PROGRESS

.1 Prevent overloading of parts of building. Do not cut, drill or sleeve load bearing structural member, unless specifically indicated, without written approval of CCG Representative. Do not otherwise penetrate a bearing structural member with any other component not shown on the drawings provided in this document.

END OF SECTION

1. GENERAL

1.1 SUMMARY

.1 Section Includes
- .1 This section concerns only the portions of the Building Management Manual (BMM) provided to the CCG Representative by the Maker before provisional acceptance of the project.

.3 Acronyms
- .1 BMM - Building Management Manual.
- .2 Cx - Commissioning.
- .3 HVAC - Heating, ventilation and air conditioning.
- .4 PI - Product information.
- .5 PV - Performance verification.
- .6 TAB - Testing, adjusting and balancing.
- .7 WHMIS - Workplace Hazardous Materials Information System.

1.2 GENERAL REQUIREMENTS

.1 Letter-size paper (216 mm x 279 mm).

.2 Methodology used for the update.

.3 Professional-quality drawings, diagrams and schematic representations.

.4 Data and information on electronic media in an accepted format approved by the CCG Representative.

.5 Also submit an electronic version of the final document.

1.3 APPROVALS

.1 Before beginning, co-ordinate requirements to prepare and submit data and information to the CCG Representative for approval.

1.4 GENERAL INFORMATION

.1 Provide the CCG Representative with the information below to be included in the appropriate parts and sections of the BMM.
- .1 Exhaustive list of the names, addresses, telephone and fax numbers for the Maker and subcontractors who took part in execution of the Work.
- .2 Brief descriptions of the architectural and structural systems.
- .3 Description of the building's operating conditions in emergencies and when enhanced security is required.
- .4 Identification of the management system for system and component maintenance.
- .5 Information on operation and maintenance of the architectural and structural systems.
- . 6 Operations and Maintenance (O&M) Manual.
- .7 Final commissioning plan.
- .8 Completed commissioning checklists.
- .9 Completed product information (PI) and performance

verification (PV) report forms, reviewed and approved by the CCG Representative.

.10 Commissioning reports.

1.5 CONTENT OF OPERATIONS AND MAINTENANCE MANUAL

.1 The CCG Representative will examine and approve the O&M Manual format and presentation within 10 weeks of Contract award.

.2 The manual must contain the relevant brochures and documentation from vendors on the products and systems installed as part of the work.

.3 It must be organized to facilitate manipulation of the data in the BMM and contain the documents listed below.

.4 Required completed product information (PI) forms, as well as the relevant data and information from other sources, as necessary.

.5 Directory of information for the installed systems and components.

.6 Required approved shop drawings, technical data and maintenance data.

.7 The Maker's data and recommendations on fabrication, installation, commissioning, operation and maintenance, and decommissioning processes for systems and components, and on staff training material.

.8 List of spare parts, special tools and replacement material with indication of storage location.

.9 Relevant information concerning the warranty (or warranties).

.10 Inspection certificates with a summary of expiration dates, for the elements requiring periodic recertification.

.11 Information on maintenance program, including the following.

.1 Recommended method and frequency of maintenance.

.2 Information on component removal, repair and replacement, in particular the material required to perform Work, jacking/hoisting locations, and inlets and outlets.

1.6 PERSONAL SAFETY COMPLIANCE MANUAL

.1 Document Includes – The manual must cover the following information.

.1 All potential emergencies, including fires and smoke, electrical outages and chemical spills.

.2 Emergency instructions in the event of fire, electrical outages and major equipment breakdown.

.3 Names and addresses of the resource persons to contact in an emergency.

.4 Document that is easy to access and easy to understand even for users without any technical knowledge.

1.7 REFERENCE DOCUMENTS TO BE INSERTED IN RELATED SCHEDULES

.1 Provide the CCG Representative with the reference documents for the installed systems, including the following.

- .1 General Documentation
  - .1 Commissioning Plan - Final version.
  - .2 WHMIS information guide.
  - .3 Approved and as-built drawings and specifications.
  - .4 Commissioning instructions.
  - .5 References to specifications sections.
- .2 Architecture and Structural Documents
  - .1 Inspection certificates and construction permits.
  - .2 Register of rooftop anchors.
  - .3 Performance control reports.

1.8 LANGUAGE

.1 Separate binders must be used for the English and French versions of the BMM.

1.9 USE OF CURRENT TECHNOLOGY

.1 Use current document creation technology to facilitate document access at all times and updates and to be compatible with user requirements.

.2 Obtain approval from the CCG Representative before beginning Work.

END OF SECTION

1. GENERAL

1.1 SUMMARY

.1 Section Includes
- .1 The following requirements apply if the Maker decides to use plywood to finish the interior. Supply and install plywood for the walls and ceilings, fascia backing and other wood elements approved in advance by the CCG. No wood may be used in the shelter and shed structures.

1.2 REFERENCES

.1 ASTM International
- .1 ASTM A 123/A 123M-09, Standard Specification for Zinc (Hot-Dip Galvanized) Coatings on Iron and Steel Products.
- .2 ASTM A 653/A 653M-11, Standard Specification for Steel Sheet, Zinc-Coated (Galvanized) or Zinc-Iron Alloy-Coated (Galvannealed) by the Hot-Dip Process.

.2 CSA International
- .1 CSA B111-1974(R2003), Wire Nails, Spikes and Staples.
- .2 CSA O121-08, Douglas Fir Plywood.
- .3 CSA O141-05(R2009), Softwood Lumber.
- .4 CSA O151-F09, Canadian Softwood Plywood.
- .5 CSA O325-07, Construction Sheathing.
- .6 CAN/CSA-Z809-08, Sustainable Forest Management.

.3 Forest Stewards Council (FSC)
- .1 FSC-STD-01-001-2004, FSC. Principle and Criteria for Forest Stewardship.

.4 Health Canada – Workplace Hazardous Materials Information System (WHMIS).
- .1 Material Safety Data Sheets (MSDS).

.5 National Lumber Grades Authority (NLGA).
- .1 Standard Grading Rules for Canadian Lumber 2008.

.6 National Research Council (NRC).
- .1 National Building Code of Canada, 2015 (NBC).

.7 South Coast Air Quality Management District (SCAQMD), California State.
- .1 SCAQMD Rule 1113-A2011, Architectural Coatings.
- .2 SCAQMD Rule 1168-A2005, Adhesive and Sealant Applications.

.8 Sustainable Forestry Initiative (SFI).
- .1 SFI-2010-2014 Standard Requirements.

2. PRODUCTS

2.1 CONSTRUCTION LUMBER

.1 Construction lumber (cannot be used for the shelter or shed structures): unless stipulated otherwise, softwood, S4S (surfaced on 4 sides), with no more than 19% humidity, in accordance with the following standards and guidelines:
- .1 CAN/CSA-O141.
- .2 NLGA Standard Grading Rules for Canadian Lumber.

2.2 PANEL MATERIALS

.1 Douglas fir plywood (DFP): to CSA O121, standard construction.

.2 Canadian softwood plywood (CSP): to CSA O151, standard construction, face finished for paint.

.3 Plywood, OSB and wood based composite panels: to CAN/ CSA O325.

2.3 ACCESSORIES

.1 Nails, spikes and staples: to CSA B111.

.2 Bolts: 12.5 mm diameter unless indicated otherwise, complete with nuts and washers.

3. EXECUTION

3.1 INSTALLATION

.1 Comply with requirements of NBC supplemented by the minimum requirements of the following paragraphs.

.2 Install furring and blocking as required to space-out and support wall and ceiling finishes, facings, and other required work.

.3 Align and plumb faces of furring and blocking to tolerance of 1:600.

.4 Install rough bucks, nailers and linings to rough openings as required to provide backing for frames and other work.

3.2 ERECTION

.1 Frame, anchor, fasten, tie and brace members to provide necessary strength and rigidity.

.2 Countersink bolts where necessary to provide clearance for other work.

END OF SECTION

1. GENERAL

1.1 SUMMARY

.1 Section Includes: commercially available structural composite shapes and plates processed by the Maker.

.2 No odour from the composite materials must be perceptible inside the shelters.

1.2 RELATED SECTIONS

.1 Section 01 33 00 - Submittal Procedures.

.2 Section 06 80 00 - Composite Fabrications.

1.3 REFERENCES

.1 American Society for Testing and Materials International (ASTM).
- .1 ASTM D4385-13, Standard Practice for Classifying Visual Defects in Thermosetting Reinforced Plastic Pultruded Products.
- .2 ASTM E84-16, Standard Test Method for Surface Burning Characteristics of Building Materials.

.2 CGSB 41-GP-6M-83, Sheets, Thermosetting Polyester Plastics, Glass Fiber Reinforced.

.3 National Electrical Manufacturers Association (NEMA).
- .1 NEMA LI1-1998, Industrial Laminating Thermosetting Products.

1.4 SUBMITTAL PROCEDURES

.1 Technical data
- .1 Submit manufacturer’s printed product literature, specifications, and data sheets in accordance with Section 01 33 00– SUBMITTAL PROCEDURES.
- .2 Submit the relevant WHMIS Material Safety Data Sheets (MSDS) in accordance with Section 01 33 00 – SUBMITTAL PROCEDURES. The MSDS must indicate the VOC content of resins, adhesives, solvents and cleaning products.

.2 Samples
- .1 Submit samples to requirements of Section 01 33 00– SUBMITTAL PROCEDURES.
- .2 Submit two (2) samples showing details for joint, edges, cutouts, and postformed profiles.

.3 Vendor's Instructions
- .1 Submit the vendor's installation instructions.

.4 Closeout Submittals.
- .1 Provide the necessary maintenance data for the materials used and attach to the BMM (Section 01 91 51).

1.5 QUALITY ASSURANCE

.1 Test Reports: Certified test reports showing compliance with specified performance characteristics and physical properties.

.2 Certificates: Product certificates signed by manufacturer certifying materials comply with specified performance characteristics and criteria and physical requirements.

.3 Pre-installation Meetings: Conduct pre-installation meeting to verify project requirements, manufacturer's installation instructions and manufacturer's warranty requirements.

.4 The materials included in this section must be supplied by a manufacturer with ISO-9001 certification.

1.6 DESIGN CRITERIA

.1 Design the structures, including connections, in accordance with the applicable construction codes and standards, where applicable.

.2 Design structural elements to withstand applied loads in accordance with the criteria in Section F1010 – SPECIAL PREFABRICATED CONSTRUCTION.

.3 Design connections to transfer loads.

.4 Materials to ASTM E84 standard, Class A, surface flame-spread rating of 25 or less and smoke-development index of 450 or less.

1.7 TRANSPORT, STORAGE AND HANDLING

.1 Storage and Protection of Laminates

.1 Deliver, store and handle in accordance with Section 01 61 00 - COMMON PRODUCT REQUIREMENTS.

.2 Where materials are stored and laid, maintain an ambient temperature of 20 degrees Celsius and a 25% to 60% humidity level, unless indicated otherwise by the manufacturer.

1.8 WASTE MANAGEMENT AND DISPOSAL

.1 Divert recyclable or reusable materials to nearest used building materials facility.

.2 Divert unused adhesives, coatings, resins, sealants and caulking to a special waste collection site.

2. PRODUCTS

2.1 MATERIALS

.1 Raw materials must comply with Section 06 80 00.

.2 Visual quality of pultruded shapes must comply with ASTM D4385.

.3 Structural shapes and plates must be fabricated using the pultrusion process:

- .1 A synthetic surfacing veil must surround the fibreglass reinforcement.
- .2 Fibreglass roving must be used inside for longitudinal strength. Continuous fibreglass mats or sewn reinforcements must be used for volume resistance.

.4 Use a compatible resin coating to seal the cut ends and exposed holes.

.5 Exposed surfaces must be smooth and consistent with ASTM D4385.

.6 Sheet materials must comply with the NEMA LI1 standard, Type GPO-2 or GPO-3; **or** with CGSB 41-GP-6M, Type 2 (a), Grade B.

END OF SECTION

1. GENERAL

1.1 SUMMARY

.1 Section Includes: composite components fabricated by the vendor.

1.2 REFERENCES

.1 CGSB 41-GP-6M-83, Sheets, Thermosetting Polyester Plastics, Glass Fiber Reinforced.

.2 American Society for Testing and Materials International, ASTM E84-16 – Standard Test Method for Surface Burning Characteristics of Building Materials.

1.3 SUBMITTAL PROCEDURES

.1 Technical Data

.1 Submit manufacturer's printed product literature, specifications, and data sheets in accordance with Section 01 33 00– SUBMITTAL PROCEDURES.

.2 Submit the relevant WHMIS Material Safety Data Sheets (MSDS) in accordance with Section 01 33 00 – SUBMITTAL PROCEDURES. The MSDS must indicate the VOC content of resins, adhesives, solvents and cleaning products.

.2 Samples

.1 Submit samples to requirements of Section 01 33 00– SUBMITTAL PROCEDURES.

.2 Submit two (2) samples showing details for joint, edges and cutouts.

.3 Manufacturer's Instructions:

.1 Submit casting instructions provided by manufacturer.

.4 Closeout Submittals.

.1 Provide the required maintenance data for the materials used and attach to the BMM per Section 01 91 51, BUILDING MANAGEMENT MANUAL.

1.4 QUALITY ASSURANCE

.1 Test Reports: Certified test reports showing compliance with specified performance characteristics and physical properties.

.2 Certificates: Product certificates signed by manufacturer certifying materials comply with specified performance characteristics and criteria and physical requirements.

.3 Pre-installation Meetings: Conduct pre-installation meeting to verify project requirements, manufacturer's installation instructions and manufacturer's warranty requirements.

1.5 DESIGN CRITERIA

.1 Design the components to be fabricated, including the joints, in accordance with the applicable construction codes and standards, where applicable.

.2 Design the components to be fabricated to withstand the applied loads. Deflection in any direction must not exceed L/240 for structural elements, unless indicated otherwise in the drawings and in the Supplementary Conditions.

.3 Joints must be designed to transfer loads.

.41 Use materials conforming to CGSB 41-GP-6M.
.1 Type 2 (a), Grade B.

1.6 TRANSPORT, STORAGE AND HANDLING

.1 Storage and Protection of Materials and Components

.1 Deliver, store and handle in accordance with manufacturer's written instructions and Section 01 61 00 - COMMON PRODUCT REQUIREMENTS.
.2 Where materials are stored and laid, maintain an ambient temperature of 20 degrees Celsius and a 25% to 60% humidity level, unless indicated otherwise by the manufacturer.

1.7 WASTE MANAGEMENT AND DISPOSAL

.1 Divert recyclable or reusable materials to nearest used building materials facility.

.2 Divert unused adhesives, coatings, resins, sealants and caulking to a special waste collection site.

2. PRODUCTS

2.1 MANUFACTURER'S INSTRUCTIONS

1. Compliance: Comply with the manufacturer's written requirements, recommendations and specifications, including any available technical bulletin, concerning handling, storage, installation, adjustment, formulation, protection and cleaning of the supplied products and the structure created.

2.2 MATERIALS

.1 Raw Materials:

.1 White gelcoat, resistant to discolouration from sun exposure,

temperature variances and weather conditions.

.2 Type E 250 to 600 g/m^2 fibreglass mat.

.3 Type E 400 to 850 g/m^2 fibreglass woven reinforcement or non-crimp fabric (NCF).

.4 Type E fibreglass roving for the casting process.

.5 Corrosion-resistant polymer resin suitable for the casting process chosen by the Maker and compatible with the reinforcements used.

.6 Heat-insulating structural synthetic foam core.

.2 Materials assembled to ASTM E84 Standard, Class A, surface flame-spread rating of 25 or less and smoke-development index of 450 or less.

2.3 CASTING

.1 The casting process chosen by the Maker must be approved by the CCG Representative before Work begins.

.2 Casts and tools suitable for the Maker's chosen casting process.

.3 Cast raw materials in accordance with the vendor's instructions.

.4 Comply with the reinforcement percentages determined by the structural calculations for each component.

.5 After casting, no dry fibreglass filaments must be visible on any surface. All surfaces must be smooth and uniform, without evidence of irregular fibre orientation, interlaminar spaces, porosity, or resin-dense areas.

.6 Use a compatible resin coating to seal the cut ends and exposed holes.

.7 As necessary and in accordance with the resin vendor's recommendations, postform the components to guarantee their performance and eliminate residual VOCs.

END OF SECTION

1. GENERAL

1.1 SECTION INCLUDES

.1 Supply and install tiles and vinyl baseboards in the area of the electronic equipment only.

.2 Supply and apply wax.

1.2 REFERENCES

.1 American Society for Testing and Materials International (ASTM)
- .1 ASTM F1066-04 (2010), Standard Specification for Vinyl Composition Floor Tile.
- .2 ASTM F1344-12e1, Standard Specification for Rubber Floor Tile.

.2 Canadian General Standards Board (CGSB)
- .1 CAN/CGSB-25.20-95, Surface Sealer for Floors.
- .2 CAN/CGSB-25.21-95, Detergent-Resistant Floor Polish.

.3 South Coast Air Quality Management District (SCAQMD), California State
- .1 SCAQMD Rule 1168-A2011, Adhesives and Sealants Applications.

1.3 SAMPLES

.1 Submit samples to requirements of Section 01 33 00– SUBMITTAL PROCEDURES.

.2 Submit two samples of tile flooring with the required dimensions and two baseboard samples.

1.4 CLOSEOUT SUBMITTALS

.1 Provide the necessary instructions for maintenance of resilient flooring and attach to the BMM.

1.5 ENVIRONMENTAL REQUIREMENTS

.1 Maintain minimum 20°C temperature for ambient air and application surface for 48 hours before, during and for 48 hours after completion of the Work.

2. PRODUCTS

2.1 MATERIALS

.1 *Antistatic vinyl tiles*: to ASTM F1066, Composition 1- non asbestos, Class 2 through pattern tile, 3 mm in depth and 300 mm^2, in colour selected by CCG Representative.
- .1 Acceptable products: Armstrong SDT or approved equivalent, colour: fossil grey 51956.

.2 Resilient baseboards: straight, grooved vinyl, measuring at least 1200

mm in length x 100 mm in height x 3 mm in depth, with premoulded end pieces and angles for grooved baseboards only, of colour such as Johnsonite Grey 48 WG or an approved equivalent.

.3 Primers and adhesives: recommended by flooring manufacturer, for specific material on applicable substrate, above, on or below grade.

.4 Sub-floor filler and leveller: two-component latex filler that does not require water, as recommended by flooring manufacturer for use with their product.

.5 Metal edge strips must be aluminium extruded, smooth, mill finish with lip to extend under floor finish, shoulder flush with top of adjacent floor finish.

.6 Wax: type recommended by flooring manufacturer.

3. EXECUTION

3.1 INSPECTION

.1 Ensure floors are dry by using test methods recommended by flooring manufacturer.

3.2 SURFACE TREATMENT

.1 Remove sub-floor ridges and bumps. Fill low spots, cracks, joints, holes and other defects with sub-floor filler.

.2 Prime and seal sub-floor to flooring manufacturer's printed instructions.

3.3 TILE FLOORING APPLICATION

.1 Provide a high ventilation rate, with maximum outside air, during installation and for 48 hours after installation. If possible, vent directly to the outside. Do not let contaminated air circulate through a district or whole building air distribution system. Maintain extra ventilation for at least one month following building occupation.

.2 Apply adhesive uniformly using recommended trowel in accordance with flooring manufacturer’s instructions. Do not spread more adhesive than can be covered by flooring before initial set takes place.

.3 Lay flooring with joints parallel to building lines to produce symmetrical tile pattern. Border tiles minimum half tile width.

.4 Terminate flooring at centre line of door in openings where adjacent floor finish or color is dissimilar.

.5 Install metal edge strips at unprotected or exposed edges where flooring terminates.

3.4 BASE INSTALLATION

.1 Lay out base to keep number of joints to a minimum. Base joints at maximum length available on the market or at internal or premoulded corners.

.2 Clean substrate and prime with one coat of adhesive.

.3 Apply adhesive to back of base.

.4 Set base against wall and floor surfaces tightly by using 3 kg hand roller.

.5 Install straight and level to variation of 1:1000.

.6 Scribe and fit to door frames and other obstructions. Use premoulded end pieces at flush doorframes.

.7 Cope internal corners. Use premoulded corner units for right angle external corners. Use formed straight base material for external corners of other angles and provide at least 300 mm for each wing. Wrap around toeless base at external corners.

3.5 CLEANING / INITIAL WAXING

.1 Remove excess adhesive from floor, base and wall surfaces without damage.

.2 Clean, seal and wax floor and base surface to flooring manufacturer's printed instructions.

3.6 PROTECTION OF FINISHED SURFACES

.1 Protect new floors until final waxing.

END OF SECTION

1. GENERAL

1.1 REFERENCES

.1 American Society for Testing and Materials International (ASTM)
- .1 ASTM D412-16, Standard Test Methods for Vulcanized Rubber and Thermoplastic Elastomers—Tension
- .2 ASTM D882-12, Standard Test Method for Tensile Properties of Thin Plastic Sheeting
- .3 ASTM D624-C, Standard Test Method for Tear Strength of Conventional Vulcanized Rubber and Thermoplastic Elastomers
- .4 ASTM D1621-16, Standard Test Method for Compressive Properties of Rigid Cellular Plastics
- .5 ASTM D4060-14, Standard Test Method for Abrasion Resistance of Organic Coatings by the Taber Abraser
- .6 ASTM D2240, Standard Test Method for Rubber Property—Durometer Hardness
- .7 ASTM D2794-93, Standard Test Method for Resistance of Organic Coatings to the Effects of Rapid Deformation (Impact)
- .8 ASTM D471-16, Standard Test Method for Rubber Property—Effect of Liquids
- .9 ASTM D543-14, Standard Practices for Evaluating the Resistance of Plastics to Chemical Reagents

1.2 PERFORMANCE REQUIREMENTS

.1 Select and apply products and floor coatings so as to create seamless, continuous flooring that meets the following performance criteria.
- .1 Minimum tensile strength 13 MPa with roughly 400% elongation to ASTM D412.
- .2 Minimum elasticity module: 70 MPa, to ASTM D882.
- .3 Minimum tear strength: 80 N/mm, to ASTM D624-C.
- .4 Minimum compressive strength: 2.5 MPa (10%), to ASTM D1621.
- .5 Abrasion resistance for 1,000 cycles, 1,000 g load – maximum weight loss values by wheel type to ASTM D4060:
  - .1 CS-10 type wheel: 18 mg
  - .2 CS-17 type wheel: 24 mg
  - .3 H-18 type wheel: 325 mg
- .6 Hardness: 45 to 55 Shore D to ASTM D2240.
- .7 Minimum impact strength to ASTM D2794:
  - .1 to 25°C: 16 Joules
  - .2 to -20°C: 10 Joules
- .8 Minimum water absorption, 24 hours at ambient temperature: 1.7% to ASTM D471.
- .9 Chemical resistance, maximum absorption, immersion for one (1) month to ASTM D543:
  - .1 engine oil: 0.18%
  - .2 transmission oil: 0.7%

1.3 SUBMITTALS FOR APPROVAL/ INFORMATION

.1 Provide submittals in accordance with Section 01 33 00 - SUBMITTAL PROCEDURES.

.2 Samples: Submit two (2) representative samples of flooring for approval, manufactured using a substrate representing that on which it is to be applied.

.3 Quality Assurance: Submit the following documents.

- .1 Test Reports: Submit certified test reports from approved independent testing laboratories indicating compliance with specifications for specified performance characteristics and physical properties.
- .2 Certificates: Submit product certificates signed by manufacturer certifying materials comply with specified performance characteristics and criteria and physical requirements.
- .3 Instructions: Submit manufacturer's installation instructions.
- .4 Manufacturer's Field Reports: Manufacturer's field reports specified.

.4 Maintenance Data: Provide the necessary maintenance data and attach to the BMM.

1.4 QUALITY ASSURANCE

.1 Manufacturer's qualifications: The manufacturer of the specified product must have instituted, at least 10 years ago, a technical training, certification and assistance program for an organized national network of "Approved Applicators for Floors" involving periodic recertification of participants.

.2 Maker's qualification: The Maker must be among the manufacturer's "Approved Applicators for Floors" for the specified product and have completed a training program on applying a two-component resin coating for horizontal indoor surfaces.

- .1 At the discretion of the CCG Representative, bids may be accepted from contractors that are not among the manufacturer's "Approved Applicator for Floors" for the specified product. Such contractors must provide the CCG Representative with five (5) reference projects for which they successfully applied the specified product under conditions similar to those of this project.

.3 Warranty: The manufacturer's Approved Applicator for Floors for the specified product and the manufacturer must provide the CCG Representative with a joint warranty covering the installation and product governed by these specifications for a period of two (2) full years from the date of delivery of the shelters to the Lévis site.

.4 Construct mock-up in accordance with Section 01 45 00 – Quality Control.

1.5 TRANSPORT, STORAGE AND HANDLING

.1 Products must be stored in original and undamaged condition with manufacturer's seal and labels intact.

.2 The expiry date must be indicated on all packaging for epoxy resin or polyurethane resin products; the CCG Representative must be notified when the date indicated on the packaging of the delivered products is imminent.

.3 Products must be stored to protect against weather conditions at the temperatures recommended by the manufacturer.

1.6 PLACE OF USE

.1 The liquid waterproofing membrane must be used to cover the SEAMLESS floors and bases of the following surfaces: the entire generating-set shelter (including the leak detection pit), including the survival section of the second shelter, including the room, toilet area and living space. The bases must be no higher than 100 mm, except under the door sills, where a minimum 50 mm migration will be required for the generating-set shelter to create a tight containment basin.

2. PRODUCTS

2.1 ELIGIBLE MAKERS AND MANUFACTURERS

.1 Polyflex 201 high-performance membrane or an approved equivalent.

.2 Sikabond Construction Adhesive: Seal around generating-set fastening, screw holes and imperfections as well as the intersection between the floor and walls with a 10 mm diameter radius.

.3 PU Polyflex 111, a polyurethane, 100% solids primer.

.4 Substitutions: Use of a product other than that specified will be considered provided the Maker submits its request in writing to the CCG Representative at least seven (7) days prior to bid closing.

2.2 POLYFLEX TECHNICAL DATA

.1 High-performance elastomeric membrane. The membrane consists of isocyanate prepolymers that react with aminated polyols. The two liquid components react to form a prepolymer membrane when mixed and applied using a spray gun and plural component heated pump. Comply with manufacturer’s recommendations.

.1 Colour: volcanic ash (grey)

.2 Type of cure: 2 components

.3 Binder: polyurethane and amine
.4 Solids by volume: 100%
.5 Solids by weight: 100%
.6 Theoretical coverage: 1 mil: 1604 ft^2/gal
.7 D.F.T. 25 microns: 149 m^2 /gal
.8 Film width: mils: 80 microns
.9 Recommended D.F.T.: 75-2500
.10 Viscosity: 500-600 CPS @ 25°C (77°F)
.11 Density: 0.98/1.04
.12 Flash point: 200°C (500°F)
.13 Tack free: 10-30 sec.
.14 Elongation up to 800%

3. EXECUTION

3.1 EXAMINATION OF SURFACES

.1 Before Work commences, the manufacturer of the floor system must inspect the substrate surfaces and notify the Maker of the shelters, the professional responsible for design, and the CCG Representative of any unsatisfactory condition. Correction must be made at no expenses and the drawings amended.

3.2 PREPARATION – GENERAL

.1 The surface must be clean and sound. Remove dust, foreign matter, coatings and disintegrated materials from the surface using an appropriate mechanical method. Create a surface profile in accordance with recommendations by the manufacturer of the products to be applied.

3.3 APPLICATION

.1 In accordance with manufacturer's instructions.

.2 Properly clean surface.

.3 Apply appropriate filler to cracks, depressions, and low sections so that the horizontality deviation does not exceed 1:500. Let dry.

.4 Where applicable, follow with application of a primer to the surface based on manufacturer's recommendations.

.5 Apply coating based on the required thickness and rate to achieve Work consistent with the prescribed performance criteria.

3.4 CLEANING

.1 Clean the coated surface in accordance with the manufacturer's instructions before submitting Work for approval by the CCG Representative.

END OF SECTION

1. GENERAL

1.1 SUMMARY

.1 Section Includes
- .1 Materials, products and methods for applying paint to new indoor substrates, except for finishes that do not require paint (e.g., gelcoat, PVC, factory finishes, etc.).

1.2 REFERENCES

.1 Justice Canada (Jus)
- .1 Canadian Environmental Protection Act (CEPA), 1999, c. 33.

.2 Environmental Protection Agency (EPA)
- .1 EPA Test Method for Measuring Total Volatile Organic Compound Content of Consumer Products, Method 24 - 1995, (for Surface Coatings).

.3 Health Canada/Workplace Hazardous Materials Information System (WHMIS)
- .1 Material Safety Data Sheets (MSDS).

.4 Master Painters Institute (MPI)
- .1 MPI Architectural Painting Specifications Manual, 2004.

.5 National Fire Code of Canada, 2015

.6 Society for Protective Coatings (SSPC)
- .1 SSPC Painting Manual, Volume Two, 8th Edition, Systems and Specifications Manual.

.7 Transport Canada (TC).
- .1 Transportation of Dangerous Goods Act, 1992 (TDGA), c. 34.

1.3 SUBMITTALS

.1 Submittals in accordance with Section 01 33 00 – SUBMITTAL PROCEDURES.

.2 Technical data
- .1 Submit product data and instructions for each paint product to be used.
- .2 Submit product data for the use and application of paint thinner.
- .3 Submit sample(s).

1.4 ENVIRONMENTAL REQUIREMENTS

.1 Additional Interior Application Requirements
- .1 Apply paint finishes when temperature at location of installation can be satisfactorily maintained within manufacturer’s recommendations.

2. PRODUCTS

2.1 MATERIALS

.1 Paint materials for paint systems to be products of single manufacturer.

.2 Conform to latest MPI requirements for interior painting work including preparation and priming or sealing.

.3 Finish coat: 100% acrylic latex, VOC level E3, velvet finish like MPI 144 ref. Sico 853 series (walls)

.4 Finish coat: 100% acrylic latex, VOC level E3, velvet finish like MPI 143 ref. Sico 851 series (ceilings)

.5 Approved anticorrosion primer for metal, VOC level E2, MPI 135 ref. Sico 926-260 (steel doors and frames)

.6 Anticorrosion finish coat for metal: Corrostop ref. Sico 635 series (steel doors and frames)

.7 Alkyd primer/sealer and stain killer like Sico Expert 890-114 (walls)

.8 Paints, coatings, adhesives, solvents, cleaning products, lubricants and other products used must have the following features:
- .1 water-based, water soluble clean-up;
- .2 non-flammable, biodegradable;
- .3 manufactured without compounds that contribute to depletion of the ozone layer in the upper atmosphere;
- .4 contain no methylene chloride (dichloromethane), chlorinated hydrocarbons or toxic metal pigments;
- .5 total suspended solids (TSS) in undiluted production plant effluent in excess of 15 mg/L to a natural watercourse or a sewage treatment facility lacking secondary treatment.

2.2 COLOURS

.1 Pale, white, beige or grey shades.

.2 Finish: easy-to-clean semi-gloss (gloss/sheen rating 5)

.3 Selection of colours and finishes will be from manufacturer’s full range of colours.

2.3 GLOSS/SHEEN RATINGS

.1 Paint gloss is defined as sheen rating of applied paint, in accordance with following values:

	Gloss at 60 degrees	Sheen at 85 degrees
Gloss rating 1 – Matte finish	max. 5	max. 10
Gloss rating 2 – Velvet finish	max. 10	10 to 35
Gloss rating 3 – Eggshell finish	10 to 25	10 to 35
Gloss – rating 4 – Satin finish	20 to 35	min. 35
Gloss rating 5 – Semi-gloss finish, traditional	35 to 70	
Gloss rating 6 – Gloss finish, traditional	70 to 85	
Gloss rating 7 – High-gloss finish	max. 85	

.2 The gloss level of painted surfaces must conform to the surface finish nomenclature.

3. EXECUTION

3.1 MANUFACTURER'S INSTRUCTIONS

1. Compliance: Conform to manufacturer's written recommendations or instructions, including product bulletins and technical data and instructions on product handling, storage and application.

3.2 INSPECTION

.1 Investigate existing substrates for problems related to proper and complete preparation of surfaces to be painted. Report to CCG Representative damage, defects, unsatisfactory or unfavourable conditions before proceeding with work.

3.3 PREPARATION

.1 Clean and prepare indoor surfaces:
- .1 Remove dust, dirt, and other surface debris by vacuuming, wiping with dry, clean cloths or compressed air.
- .2 After scrubbing the surfaces, rinse them with clean water until all foreign residue is removed.
- .3 Allow surfaces to drain completely and allow to dry thoroughly.

.2 Apply primer, paint, or pretreatment as soon as possible after cleaning and before deterioration occurs.

.3 Sand and remove the dust from surfaces between coats, as necessary, to ensure proper adherence of next coat.

.4 Clean metal surfaces to be painted by removing rust, loose mill scale, welding slag, dirt, oil, grease and other foreign substances. Remove traces of blast products from surfaces, pockets and corners to be painted using clean brushes followed by vacuum cleaning.

3.4 APPLICATION

.1 Method of application to be as approved by CCG Representative. Apply paint by brush or roller. Conform to manufacturer's application instructions unless specified otherwise.

.2 Brush and Roller Application.
- .1 Apply paint in uniform layer using brush and/or appropriate roller.
- .2 Work paint into cracks, crevices and corners.

.3 Apply each coat of paint so as to obtain a continuous, uniformly thick coat. Repaint thin spots or bare areas before next coat of paint is applied.

.4 Allow surfaces to dry and set after cleaning and between coats; observe the minimum wait time recommended by the manufacturer.

.5 Sand and dust between coats to remove visible defects.

3.5 RESTORATION

.1 Clean and reinstall hardware items removed before undertaking painting operations.

.2 Remove protective coverings and warning signs as soon as practical after operations cease.

.3 Remove splatters from exposed surfaces that were not painted. Remove smears and spatter immediately as operations progress, using compatible solvent.

.4 Protect freshly completed surfaces from paint droppings and dust to approval of CCG Representative

END OF SECTION

APPENDICES

A. Decontamination Kit

B. Geotechnical Study for the VHF Communications Tower, 1984

C. Summary of Deliverables

D. CCG Drafting Standard

E. Photographic Survey of Elements to Be Secured to Shelter Walls

F. Technical Data Sheets for Electric Toilet (Survival Shelter)

G. Technical Data Sheets for Air Exchanger (Survival Shelter)

H. Photographic Survey of Current Site at Heath Point and Lévis

I. Entrances for Coaxial Cables, Electrical Conduits, Pipes for Diesel, Etc.

J. Insulated and Uninsulated Sleeves for Electrical Cables (Interior Partitions)

K. Insulated Sleeves for Generator Exhaust Pipes

L. Proposed Fit-Up for Survival Section (Beyond Contract Scope, CCG Requirements)

The Work under this contract consists of, but is not limited to. Some documents must be issued in both official languages. If no mention, the documents can be produced only in French. Finally, all drawings must strictly follow the CCG drawing standard.

1. Design and fabrication of the composite material shelters (specifications and drawings be issued in both official languages). Validation of all openings is required by the CCG prior to the manufacture of the shelters.
2. Design and fabrication of three composite materials sheds, two of which have a containment basin. The specifications and drawings be issued in both official languages. Validation of all openings is required by the CCG prior to the manufacture of the sheds.
3. Design and fabrication of composite materials goosenecks (11) and gantries (6). A procedure written in both language shall be provided to the CCG representative to secure these delivered components separately from shelters and sheds to preserve their solidity and their waterproofing.
4. Composite material parts to make: parts for the existing cable tray, parts for guardrails and the extension ot the gallery and of the walkway.
5. Supply and install the doors, windows, outlets exhausts (3), electrical raceway with uninsulated or insulated sleeves, cables entries, pipes entries and outlets for outdoor lights.
6. Design and construction of the temporary foundations for the two shelters and the three sheds. Their height will be confirmed by CCG representative after the design of the shelters and sheds.
7. Design the permanent foundations of the shelters and sheds (specifications and drawings be issued in both official languages). Their height will be confirmed by CCG representative after the design of the shelters and sheds.
8. Supply composite material or stainless steel hardware and fasteners needed + 10%.
9. Installation of the electrical toilet and air exchanger furnished by CGG following the maker specifications and the contract drawings. The maker is responsible to supply any parts needed to complete the installation, excepted the electrical part installed by the Contractor in Autumn 2020.
10. Conduct the tightness tests for the two shelters with a specialised company paid by the maker, For the test, consider that a NOVEC 1230 will be installed.. Give a copy of the French report to the CCG representative.
11. Preparation and handling of shelters, sheds, and accessories for transportation to the CCG site. No assets, materials should be put on the ground: supply temporary foundations and palettes needed. The maker has to respect the comments from CCG representative when he will arrive at the CCG site.

12. Write and deliver instruction for handling, preparing and transporting shelters,sheds and other parts (documents issued in both official languages).
13. Transmission of all technical information required in contract documents in a timely manner. Without limitation:
    a. The drawings and specifications for all composite material assets and parts (shelters, sheds, extensions, guardrails, hardware, etc.) (in both official languages).
    b. Shop drawings
    c. The specifications and drawings for the design of temporary foundations and the as built (in both official languages).
    d. The specifications and drawings for the construction of the permanent foundations (in both official languages)
    e. Photographic survey made during this project.
    f. As built for the shelters, sheds, extensions and other accessories (in both official languages)
    g. Building management manual for shelters and sheds
    h. Quality controle manual from the maker
    i. Five years warranty document (including parts and labour)

Technical information will be provided after contract award by CCG representative.

You can see the layout that the CCG intends to carry out in the survival section on the contract drawings. No furniture, cabinets are to be provided in this contract.

CAD PRODUCED DRAWING
PRODUIT PAR DAO

inches / pouces

REPORT ANY ERRORS OR OMISSIONS TO ILS MANAGER
SIGNALER LES ERREURS OU LES OMISSIONS AU GESTIONNAIRE SLI

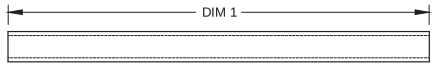

DIA. INT. SUPÉRIEUR AU DIA. PIÈCE #3 /
INT. DIA. SUPERIOR TO ITEM #3 DIA.

4 TUBE PVC TUBE

Échelle / Scale : 1:3

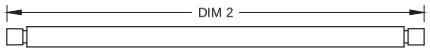

EPKRISER (HARGER)

3 TIGE D'ESPACEMENT / SPACING ROD

Échelle / Scale : 1:3

DIM 1 :
ÉPAISSEUR DES MURS FINIS + 50 mm /
FINISHED WALLS TICKNESS + 50 mm.

DIM 2 :
ÉPAISSEUR DES MURS FINIS + 150 mm /
FINISHED WALLS TICKNESS + 150 mm.

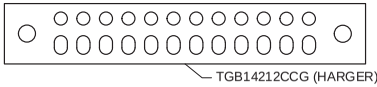

TGB14212CCG (HARGER)

2 PLAQUE DE MALT EXTÉRIEURE / OUTSIDE GROUND BAR (HARGER MODEL)

Échelle / Scale : 1:4

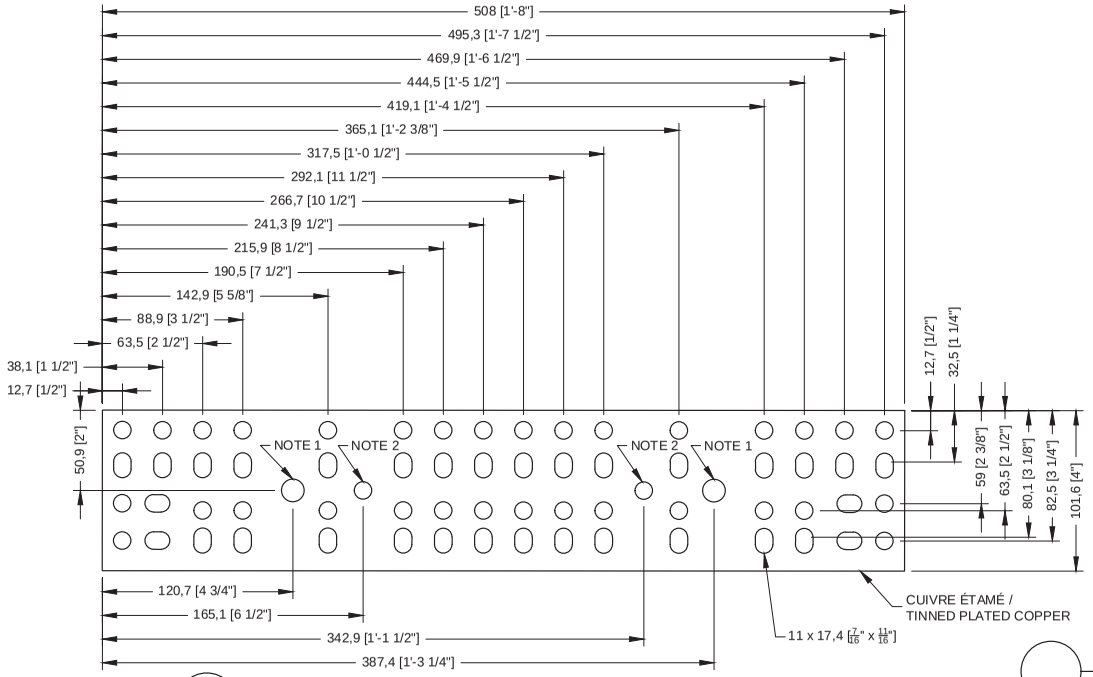

1 PLAQUE DE MALT INTÉRIEURE / INSIDE GROUNDING PLATE (CCG/GCC MODEL)

Échelle / Scale : 1:3

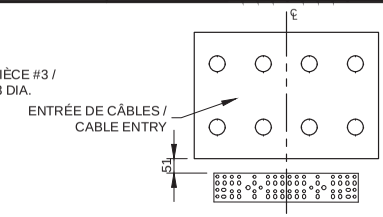

REF.: 09152-B036-E_03.dwg

MONTAGE MURAL / WALL MOUNTING

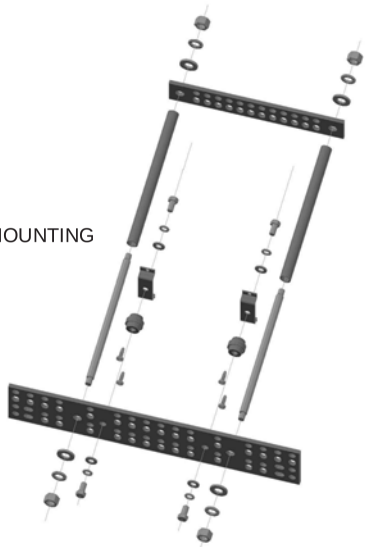

VUE D'ENSEMBLE / GENERAL ARRANGEMENT

Échelle / Scale : 1:8

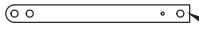

EPKGSSS (HARGER)

5 SHRINK TAPE TOGETHER (HARGER)

Échelle / Scale : AUCUNE / NONE

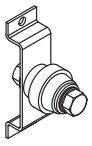

WBKT1KIT

ENSEMBLE DE MONTAGE MURAL INTÉRIEUR / INSIDE WALL MOUNTING KIT

Échelle / Scale : 1:3

REF. : CM085-015-AS (SECTEUR GRANDS-LACS / GREAT LAKES SECTOR)

Fisheries and Oceans Canada / Pêches et Océans Canada
Canadian Coast Guard / Garde côtière Canadienne

Vendor / Sous-traitant

#KIT : TEPKCCGNS
MARQUE : HARGER

NOTE 1 : TROUS POUR TIGES D'ESPACEMENT (EPKRISER) / SPACING RODS HOLES (EPKRISER)

NOTE 2 : TROUS POUR ENSEMBLE DE MONTAGE MURAL / WALL MOUNTING KIT HOLES

NOTE 3 : LE NUMÉRO DE PIÈCE DE L'ENSEMBLE EST SPÉCIFIQUE À LA GCC. DOIT ÊTRE SPÉCIFIÉ LORS DE LA COMMANDE / THE PART NUMBER OF THE ASSEMBLY IS SPECIFIC TO CCG. MUST BE SPECIFIED WHEN ORDERING.

rev	description	by / par	date
1	AJOUT SPÉCIFICATIONS	LV	2019-04-11
0	POUR/FOR CONSTRUCTION	LV	2013-12-17

Asset - Actif
ÉQUIPEMENTS NORMALISÉS / STANDARDIZED EQUIPMENTS
SCTM / MCTS

Drawing - Dessin
BARRE DE MALT MAÎTRESSE / MASTER GROUND BAR

		date
drawn - dessiné	SLI	2013-12-17
designed - conception	L. VANDAL	2013-12-10
checked - vérifié	L. VANDAL	2013-12-17
approved - approuvé		

CCG ref. no. - no. réf. GCC	scale - échelle INDIQUÉE/SHOWN	
drawing no. - no. dessin 09123	sheet-feuille 01/01	rev 1

ANSI B

File / Fichier: 09123.DWG - Printed / Imprimé: 2019/04/15 12:14

09123

millimeters / millimètres

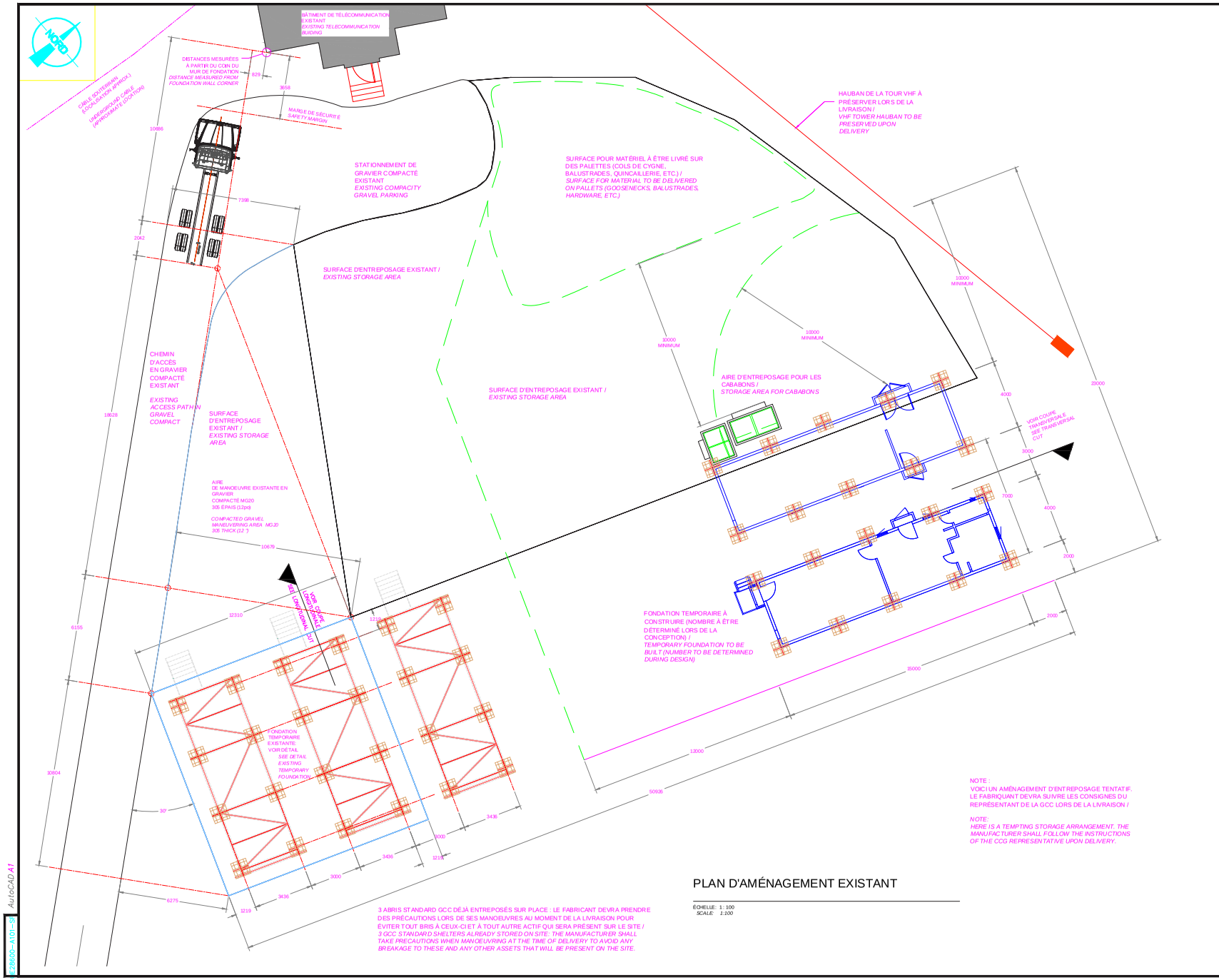

NOTE :
VOICI UN AMÉNAGEMENT D'ENTREPOSAGE TENTATIF. LE FABRIQUANT DEVRA SUIVRE LES CONSIGNES DU REPRÉSENTANT DE LA GCC LORS DE LA LIVRAISON /

NOTE:
HERE IS A TEMPTING STORAGE ARRANGEMENT. THE MANUFACTURER SHALL FOLLOW THE INSTRUCTIONS OF THE CCG REPRESENTATIVE UPON DELIVERY.

3 ABRIS STANDARD GCC DÉJÀ ENTREPOSÉS SUR PLACE : LE FABRICANT DEVRA PRENDRE DES PRÉCAUTIONS LORS DE SES MANOEUVRES AU MOMENT DE LA LIVRAISON POUR ÉVITER TOUT BRIS À CEUX-CI ET À TOUT AUTRE ACTIF QUI SERA PRÉSENT SUR LE SITE /
3 GCC STANDARD SHELTERS ALREADY STORED ON SITE: THE MANUFACTURER SHALL TAKE PRECAUTIONS WHEN MANOEUVRING AT THE TIME OF DELIVERY TO AVOID ANY BREAKAGE TO THESE AND ANY OTHER ASSETS THAT WILL BE PRESENT ON THE SITE.

PLAN D'AMÉNAGEMENT EXISTANT

ÉCHELLE: 1: 100
SCALE: 1:100

Pêches et Océans Canada / Fisheries and Oceans Canada
Garde côtière / Coast Guard

Services techniques
Systèmes électroniques et informatiques
Informations techniques et graphiques

101 Boul. Champlain (dépôt 18)
Québec (Québec) G1K 7Y7

no. projet: no. dessin:

Révision	Description	Par/By	Date
0	TEMPORAIRE POUR HEATH-POINT	2019-02	JDM

A: Numéro du détail / Detail no.
B: Feuille sur laquelle le détail est référé / Location drawing no.
C: Feuille sur laquelle le détail est dessiné / Drawing no.

Toute modification doit être rapportée à:
All modification must be reported to:

GARDE CÔTIÈRE, RÉGION LAURENTIENNE
SERVICES TECHNIQUES
Systèmes électroniques et informatiques
Informations Techniques et Graphiques

Dossier: File:

LÉVIS
SITE DE TÉLÉCOMMUNICATION
TELECOMMUNICATION SITE

Dessin: Drawing:

(LAUZON)
IMPLANTATION TEMPORAIRE
DES ABRIS SCTM
TEMPORARY SHELTERING SCTM
LÉVIS (LAUZON)

		Date
Conçu par: Designed by:	—	
Dessiné par: Drawn by:	D. BOULET	2012/10/26
Vérifié par: Verified by:	L. VANDAL	2012/10/26
Approuvé par: Approved by:	L. VANDAL	2012/10/26

No. dossier: File no.:
Échelle: Scale: INDIQUÉE

No. dessin: Drawing no.: QE28600-A101-SF_TEMP-HEATH-POINT
No. feuille: Sheet no.: AE-01

QE28600-A101-SF
AutoCAD A1

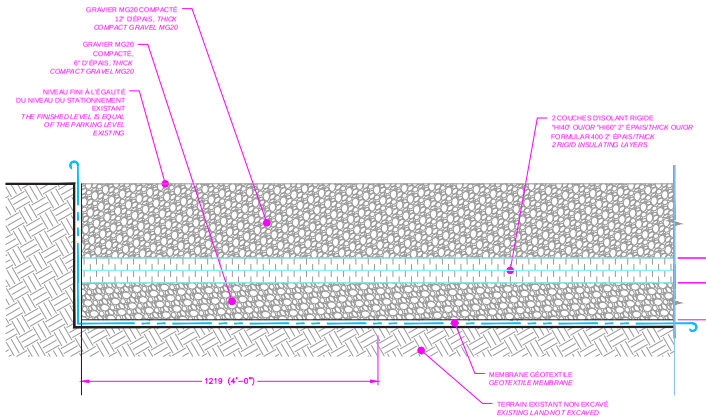

AIRE D'AMÉNAGEMENT POUR ENTREPOSAGE

ÉCHELLE: 1 : 10

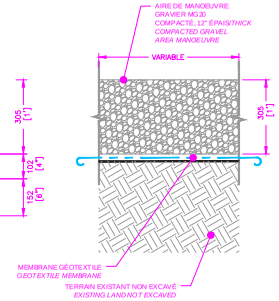

AIRE DE MANOEUVRE

ÉCHELLE: 1 : 10
SCALE: 1:10

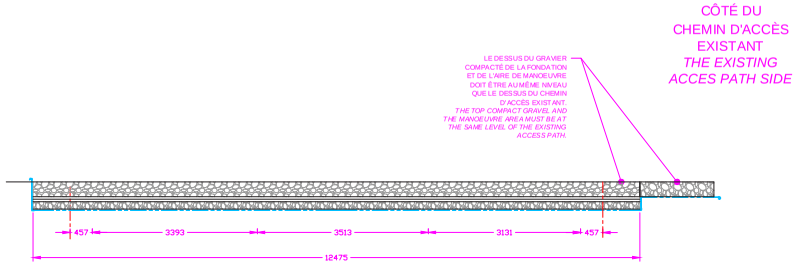

COUPE LONGITUDINALE
LONGITUDINAL SECTION

ÉCHELLE: 1 : 50
SCALE: 1:50

Pêches et Océans Canada — Fisheries and Oceans Canada
Garde côtière — Coast Guard

Services techniques
Systèmes électroniques et informatiques
Informations techniques et graphiques

101 Boul. Champlain (dépôt 18)
Québec (Québec) G1K 7Y7

no. projet: — no. dessin:

Révision	Description	Par/By	Date
0	TEMPORAIRE POUR HEATH-POINT	2019-02	JDM

A: Numéro du détail
Detail no.
B: Feuille sur laquelle le détail est référé
Location drawing no.
C: Feuille sur laquelle le détail est dessiné
Drawing no.

Toute modification doit être rapportée à:
All modification must be reported to:

GARDE CÔTIÈRE, RÉGION LAURENTIENNE
SERVICES TECHNIQUES
Systèmes électroniques et informatiques
Informations Techniques et Graphiques

Dossier: / File:

(SITE DE LAUZON) LÉVIS

SITE DE TÉLÉCOMMUNICATION
TELECOMMUNICATION SITE

Dessin: / Drawing:

PLAN D'AMÉNAGEMENT
DU SITE DE LA GCC À LÉVIS
(LAUZON)
TEL QUE CONSTRUIT

		Date
Conçu par: / Designed by:	_	
Dessiné par: / Drawn by:	D. BOULET	2012/10/26
Vérifié par: / Verified by:	L. VANDAL	2012/10/26
Approuvé par: / Approved by:	L. VANDAL	2012/10/26

No. dossier: / File no.:
Échelle: / Scale: INDIQUÉE
No. dessin: / Drawing no.: QE28600-A101-SF_TEMP-HEATH-POINT
No. feuille: / Sheet no.: AF-02

QE28600-A101-SF

AutoCAD A1

CAD PRODUCED DRAWING
PRODUIT PAR DAO

inches 0 1

pouces 3 4

REPORT ANY ERRORS OR OMISSIONS TO ILS MANAGER
SIGNALER LES ERREURS OU LES OMISSIONS AU GESTIONNAIRE SLI

NOTES :

- LES PORTIQUES DOIVENT ÊTRE INSTALLÉS QUE SUR LE SITE FINAL.
- FINITION INTÉRIEURE DES CABANONS : CONTRE-PLAQUÉ AVEC PEINTURE RÉSISTANTE AUX PRODUITS PÉTROLIERS.

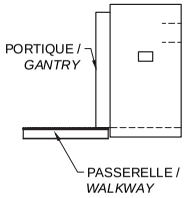

CABABON 1 ET 2 /
SHED 1 AND 2

DIMENSIONS DES COLS DE CYGNE ET DES PORTES / GOOSENECK AND DOOR SIZES			
IDENTIFICATION	DIMENSIONS mm	OUVERTURES NETTES / NET OPENING mm	GRILLAGE ANTI-OISEAU / NON-BIRDS SCREEN 1/2" X 1/2"
AAA EXT.	2160H X 1818L		
BBB EXT.	2160H X 1000L		
CCC	200H X 300L X 200P	200 X 300	OUI / YES
DDD	200H X 300L	200 X 300	OUI / YES
AAA INT.	2032H X 1500L		
BBB INT.	2032H X 860L		

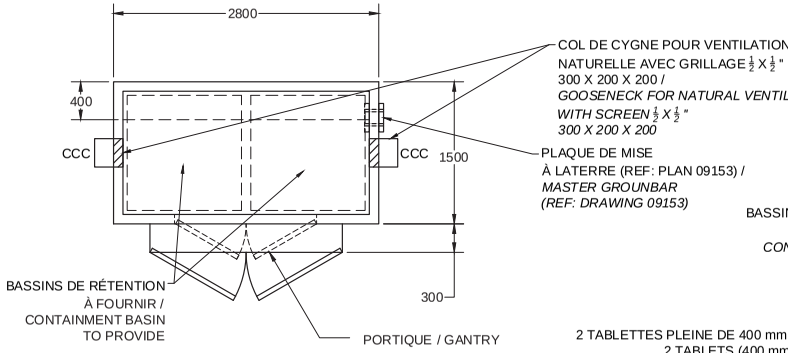

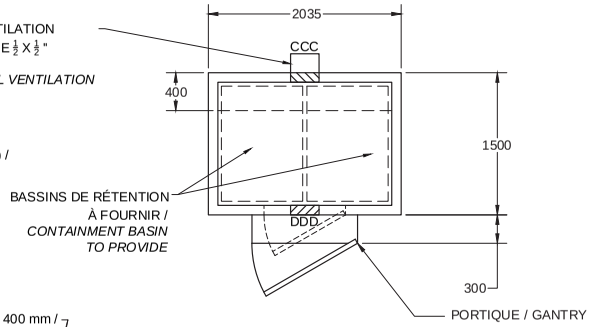

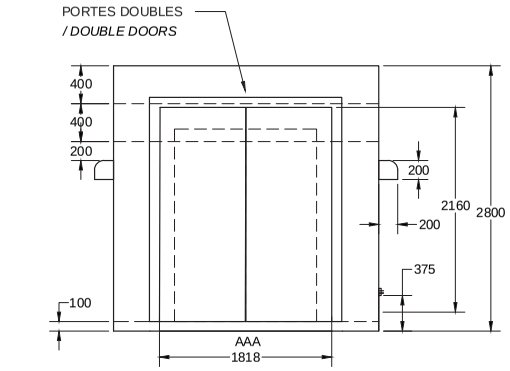

CABANON 1 / SHED 1

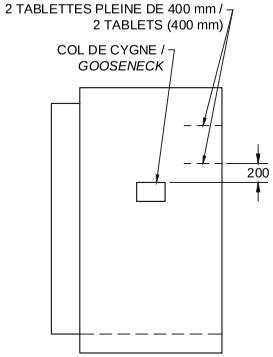

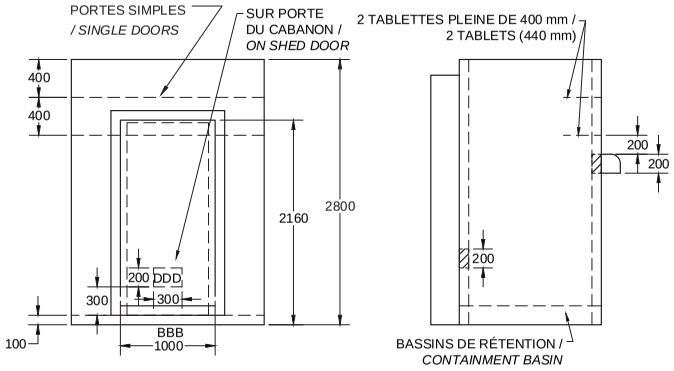

CABANON 2 / SHED 2

Fisheries and Oceans Canada / Pêches et Océans Canada
Canadian Coast Guard / Garde côtière Canadienne

Vendor / Sous-traitant

rev	description	by par	date
0	ÉMIS POUR APPEL D'OFFRES / ISSUED FOR TENDER	JDM	2019-01-03

Asset - Actif

HEATH POINTE

SITE DE TÉLÉCOMMUNICATIONS
- TELECOMMUNICATIONS SITE

Drawing - Dessin

CABANON 1 ET 2 - SHEDS 1 AND 2

drawn - dessiné: GDT	date: 2019-01-04
designed - conception: MAT-COMP - R. LANGLOIS - S. PAGÉ	date: 2017-09-15
checked - vérifié: J. DE MONTIGNY	date
approved - approuvé: J. DE MONTIGNY	date
CCG ref. no. - no. réf. GCC: DMYA8055-855	scale - échelle: 1:50
drawing no. - no. dessin: QE85500-B101-CA	sheet-feuille: U1-01 / rev: 0

QE85500-B101-CA

ANSI B

File / Fichier: QE85500-B101-CA.DWG - Printed / Imprimé: 2019/05/16 2:43

QE85500-B101-CA

4 3 millimeters 0 1 2 3 millimètres 5 6 7 8 2 1

CAD PRODUCED DRAWING
PRODUIT PAR DAO

inches / pouces

REPORT ANY ERRORS OR OMISSIONS TO ILS MANAGER
SIGNALER LES ERREURS OU LES OMISSIONS AU GESTIONNAIRE SLI

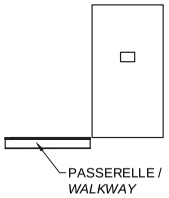

CABABON 3 /
SHED 3

DIMENSIONS DES COLS DE CYGNE ET DES PORTES / GOOSENECK AND DOOR SIZES			
IDENTIFICATION	DIMENSIONS mm	OUVERTURES NETTES / NET OPENING mm	GRILLAGE ANTI-OISEAU / NON-BIRDS SCREEN 1/2" X 1/2"
EEE	2134H X 914L		
FFF	200H X 300L X 200P	200 X 300	OUI / YES

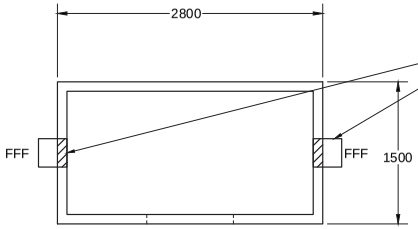

COL DE CYGNE POUR VENTILATION
NATURELLE AVEC GRILLAGE $\frac{1}{2}$ X $\frac{1}{2}$ "
300 X 200 X 200 /
GOOSENECK FOR NATURAL VENTILATION
WITH SCREEN $\frac{1}{2}$ X $\frac{1}{2}$ "
300 X 200 X 200

SANS PORTIQUE /
WITHOUT GANTRY

ENTRÉE DE CONDUIT
1 REQUIS /
ENTRY SEAL PIPIE
1 REQUIRED
ROTEX RS OMP SEAL SIZE 100 Ø63mm

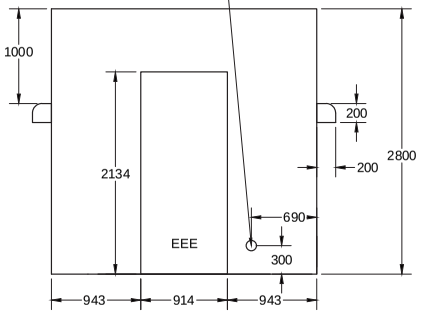

COL DE CYGNE /
GOOSENECK

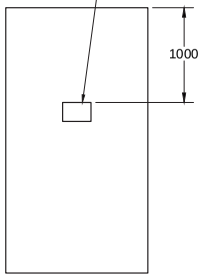

CABANON 3 / SHED 3

Fisheries and Oceans Canada / Pêches et Océans Canada
Canadian Coast Guard / Garde côtière Canadienne

Vendor / Sous-traitant

rev	description	by par	date
0	ÉMIS POUR APPEL D'OFFRES / ISSUED FOR TENDER	JDM	2019-01-03

Asset - Actif

HEATH POINTE

SITE DE TÉLÉCOMMUNICATIONS
- TELECOMMUNICATIONS SITE

Drawing - Dessin

CABANON 3 - SHED 3

		date
drawn - dessiné	GDT	2019-01-04
designed - conception	MAT-COMP - R. LANGLOIS - S. PAGÉ	2017-09-15
checked - vérifié	J. DE MONTIGNY	
approved - approuvé	J. DE MONTIGNY	

CCG ref. no. - no. réf. GCC	DMYA8055-855
scale - échelle	1:50
drawing no. - no. dessin	QE85500-B101-CA
sheet-feuille	U2-02
rev	0

QE85500-B101-CA

File / Fichier: QE85500-B101-CA.DWG - Printed / Imprimé: 2019/05/16 2:43

ANSI B

millimeters / millimètres

CAD PRODUCED DRAWING
PRODUIT PAR DAO

inches 0 1 — pouces 3 4

REPORT ANY ERRORS OR OMISSIONS TO ILS MANAGER
SIGNALER LES ERREURS OU LES OMISSIONS AU GESTIONNAIRE SLI

MATÉRIEL À FOURNIR / MATERIAL TO BE SUPPLIED				
QUINCAILLERIE / HARDWARE				
NO	NO DE PIECE / PART NO	DESCRIPTION	MATERIAU / MATERIAL	QTE / QTY
1	CORNIÈRE / ANGLE	80x80x10x120	FIBRE DE VERRE / FIBREGLASS	4
2	PLAQUE / PLATE 1	225x225x12	FIBRE DE VERRE / FIBREGLASS	2
3	91315A235	TREADED ROD, 5/8"-11 MACMASTER OR EQUIVALENT	FIBRE DE VERRE / FIBREGLASS	4
4	91332A035	SQUARE NUT, 5/8"-11 MCMASTER OR EQUIVALENT	FIBRE DE VERRE / FIBREGLASS	8
5	91525A366	OVERSIZE WASHER 5/8" MCMASTER OR EQUILVALENT	ACIER INOXYDABLE 316 / STAINLESS STEEL 316	8
6	90715A185	NYLON INSERT LOCKNUT 5/8"-11 MCMASTER OR EQUILVALENT	ACIER INOXYDABLE 316 / STAINLESS STEEL 316	8

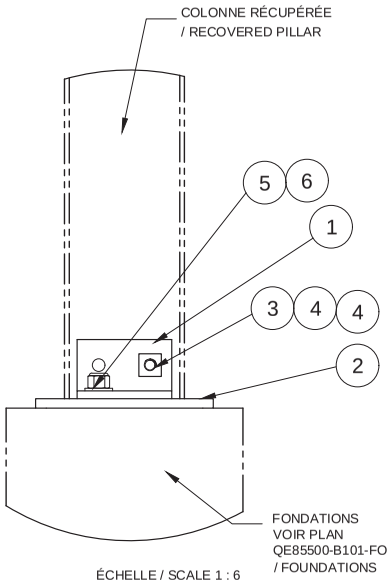

ÉCHELLE / SCALE 1 : 6

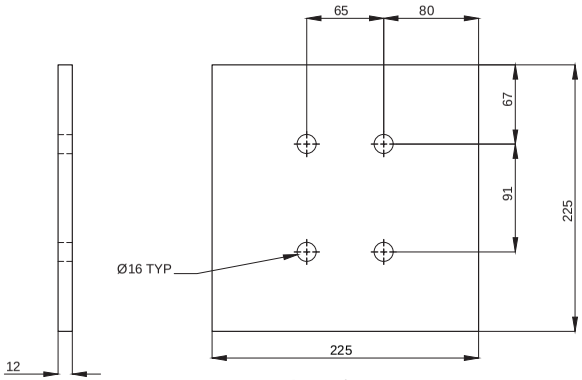

PLAQUE / PLATE 1
ÉCHELLE / SCALE 1 : 4

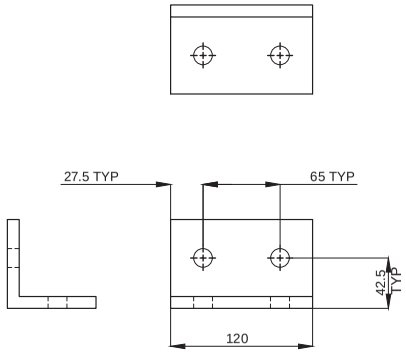

CORNIÈRE / ANGLE
ÉCHELLE / SCALE 1 : 4

Fisheries and Oceans Canada / Pêches et Océans Canada
Canadian Coast Guard / Garde côtière Canadienne

Vendor / Sous-traitant

rev	description	by par	date
0	ÉMIS POUR APPEL D'OFFRES / ISSUED FOR TENDER	JDM	2019-01-03

Asset - Actif

HEATH POINTE

SITE DE TÉLÉCOMMUNICATIONS
- TELECOMMUNICATIONS SITE

Drawing - Dessin
RESTAURATION DE DEUX COLONNES DE L'ÉTAGÈRE À CÂBLE DU PYLÔNE HAUBANÉ VHF -
RESTORATION OF THE CABLE SHELF PILLARS

		date
drawn - dessiné	GDT	2019-01-04
designed - conception	MAT-COMP - R. LANGLOIS - S. PAGÉ	2018-03-18
checked - vérifié	J. DE MONTIGNY	
approved - approuvé	J. DE MONTIGNY	

CCG ref. no. - no. réf. GCC	DMYA8055-855	scale - échelle	AS SHOWN
drawing no. - no. dessin	QE85500-B101-CO	sheet-feuille	AD-01
		rev	0

QE85500-B101-CO

ANSI B

File / Fichier: QE85500-B101-CO.DWG - Printed / Imprimé: 2019/05/16 2:45

millimeters 0 1 2 3 — millimètres 5 6 7 8

4 3 2 1

A B C

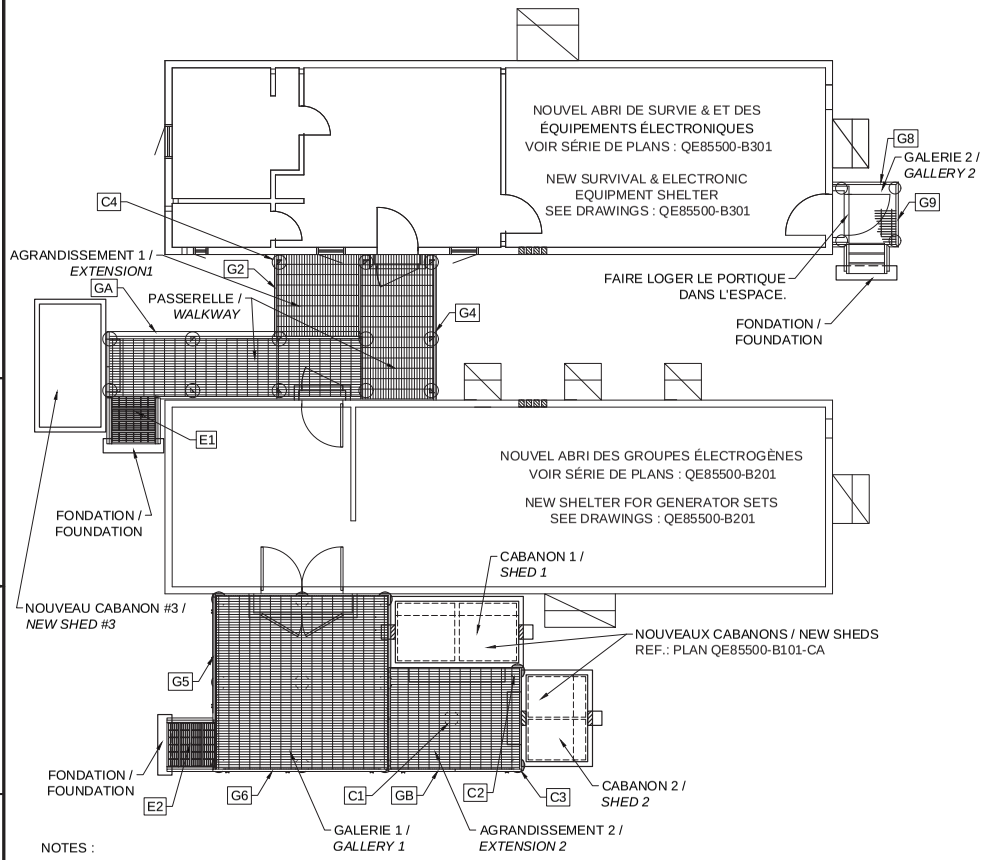

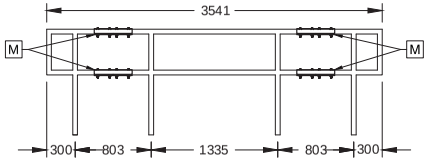

DÉTAIL - GA (G1 MODIFIÉ) / DETAIL - GA (MODIFIED G1)

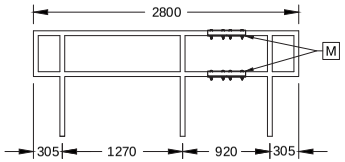

DÉTAIL - GB (G7 MODIFIÉ) / DETAIL - GB (MODIFIED G7)

M : PIÈCES À FOURNIR POUR MODIFIER LE GARDE-CORPS.
CONSULTER LE PLAN QE85500-B101-PA 02/02 /
PARTS TO SUPPLY FOR THE GUARDRAILS MODIFICATIONS.
SEE THE QE85500-B101-PA 02/02 DRAWING

NOTES :

1. LES GARDE-CORPS QUI ONT UNE IDENTIFICATION IDENTIQUE AU PLAN QE85500-B101-EN-AV NE SUBISSENT AUCUNE MODIFICATION (G2, G4, G5, G6, G8 ET G9).
2. LES GARDE-CORPS GA ET GB PROVIENNENT DE LA MODIFICATION DES GARDE-CORPS G1 ET G7. FOURNIR LE MATÉRIEL POUR CE FAIRE.
3. TROIS NOUVELLES COLONNES POUR SUPPORTER L'AGRANDISSEMENT 2 (C1, C2 ET C3) ET UNE SEULE POUR L'AGRANDISSEMENT 1 (C4).
4. AUCUNE MODIFICATION À APPORTER À LA GALERIE 2. FAIRE EN SORTE QUE LA PORTE DU PORTIQUE PUISSE OUVRIR À 90 DEGRÉS TOUT EN RESPECTANT LES DIMENSIONS DE LA GALERIE 2.

1. THE GUARDRAILS WITH THE SAME IDENTIFICATION AS SHOWN ON QE85500-B101-EN-AV DON'T CHANGE (G2, G4, G5, G6, G8 ET G9).
2. THE GUARDRAILS GA AND GB COME FROM THE CHANGES OF THE GUARDRAILS G1 AND G7. SUPPLY THE MATERIALS TO THAT END.
3. THREE NEW FIBERGLASS COLUMNS FOR THE ENLARGEMENT 2 (C1, C2 AND C3) AND ONLY ONE FOR THE ENLARGEMENT 1 (C4).
4. NOTHING TO DO WITH THE GALLERY 2. TO BE SURE THAT THE GANTRY DOOR OPENS TO 90 DEGREES IN THE SAME GALLERY 2 SIZES.

Fisheries and Oceans Canada / Pêches et Océans Canada
Canadian Coast Guard / Garde côtière Canadienne

Vendor / Sous-traitant

rev	description	by par	date
0	ÉMIS POUR APPEL D'OFFRES / ISSUED FOR TENDER	JDM	2019-01-03

Asset - Actif

HEATH POINTE

SITE DE TÉLÉCOMMUNICATIONS - TELECOMMUNICATIONS SITE

Drawing - Dessin

NOUVELLE CONFIGURATION ABRIS, PASSERELLES, GALERIES ET CABANONS

drawn - dessiné: GDT	date: 2019-01-10	
designed - conception: J. DE MONTIGNY	date: 2019-01-10	
checked - vérifié: J. DE MONTIGNY	date	
approved - approuvé: J. DE MONTIGNY	date	
CCG ref. no. - no. réf. GCC: DMYA8055-855	scale - échelle: 1:100	
drawing no. - no. dessin: QE85500-B101-EN	sheet-feuille: B-01	rev: 0

QE85500-B101-EN

ANSI B

File / Fichier: QE85500-B101-EN.DWG - Printed / Imprimé: 2019/05/16 2:45

NOTES :

LA GCC DÉSIRE RÉCUPÉRER LES PASSERELLES, GALERIES, ESCALIERS ET GARDE-CORPS POUR LA NOUVELLE CONFIGURATION DU SITE À HEATH-POINTE. CONSULTER LE PLAN QE85500-B101-EN AFIN DE VOIR LES PIÈCES À FABRIQUER ET À FOURNIR DANS LE CADRE DU PRÉSENT CONTRAT /

THE CCG WISHES TO RECOVER THE GATEWAYS, GALLERIES, STAIRCASES AND RAILING FOR THE NEW CONFIGURATION OF THE SITE AT HEATH-POINTE. CONSULT THE PLAN QE85500-B101-EN IN ORDER TO SEE THE PARTS TO BE MANUFACTURED AND PROVIDED UNDER THIS AGREEMENT.

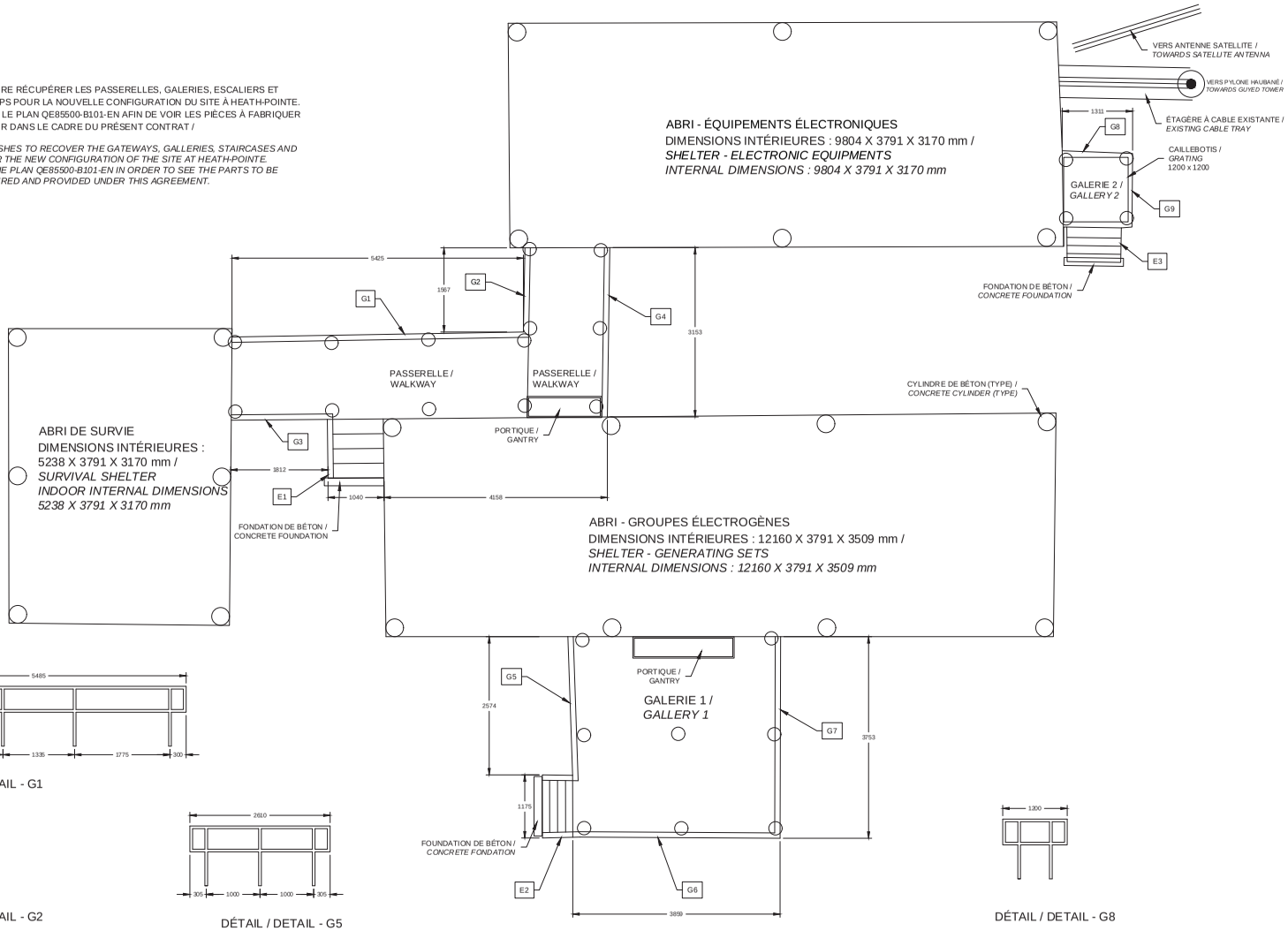

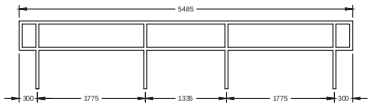

DÉTAIL / DETAIL - G1

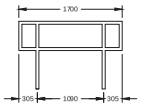

DÉTAIL / DETAIL - G2

DÉTAIL / DETAIL - G5

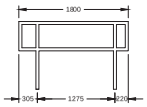

DÉTAIL / DETAIL - G3

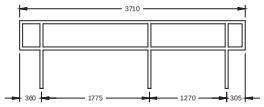

DÉTAIL / DETAIL - G6

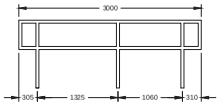

DÉTAIL / DETAIL - G4

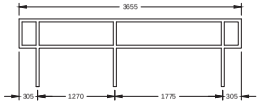

DÉTAIL / DETAIL - G7

DÉTAIL / DETAIL - G8

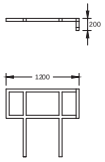

DÉTAIL / DETAIL - G9

Pêches et Océans Canada | Fisheries and Oceans Canada

Garde côtière | Coast Guard

Direction des Services techniques intégrés
Infrastructures maritimes et civiles
Génie civil

101, Boul. Champlain
Québec, QcG1K 7Y7

Révision	Description	Par/By	Date
1	GÉNÉRAL	JDM	2019-03

A: Numéro du détail / Detail no.
B: Feuille sur laquelle le détail est référé / Location drawing no.
C: Feuille sur laquelle le détail est dessiné / Drawing no.

Toute modification doit être rapportée à: / All modifications must be reported to:

Garde côtière, région du Québec
Direction des Services techniques intégrés

Informations Techniques et Graphiques

Dossier: / File:

POINTE-HEATH

ÎLE ANTICOSTI

Dessin: / Drawing:

CONFIGURATION ACTUELLE / CURRENT CONFIGURATION
ABRIS, GALERIES, PASSERELLE, ESCALIERS, GARDE-CORPS EXISTANTS
CURRENT SHELTERS, GALLERIES, WALKWAY, STAIRS, GUARDRAILS

		Date
Conçu par: / Designed by:	J. DEMONTIGNY	2019-03
Dessiné par: / Drawn by:	SLI	2019-03
Vérifié par: / Verified by:	J. DEMONTIGNY	2019-03
Approuvé par: / Approved by:	J. DEMONTIGNY	2019-03

No. dossier: / File no.:

Échelle: / Scale: 1:125

No. dessin: / Drawing no.: QE85500-B101-EN-AV

No. feuille: / Sheet no.: A-01

QE85500-B101-EN-AV

QE85500-B101-EN-AV.DWG 2019/05/16 02:46 AutoCAD A1

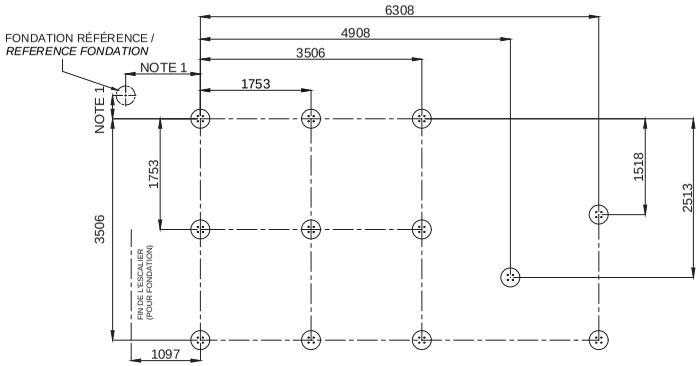

VUE EN PLAN FONDATIONS POUR GALERIE - ABRI GROUPES ÉLECTROGÈNES /
FOUNDATION PLAN VIEW FOR GALLERY - GENERATOR SETS SHELTER
1:75

NOTES

1. DIMENSIONS À DÉTERMINER SELON L'EMPLACEMENT DES FONDATIONS DE L'ABRI
2. CHOISIR LE TYPE DE FONDATION SELON LA NATURE DU SOL EN PLACE OU SELON LES RECOMMANDATIONS DU RAPPORT GÉOTECHNIQUE.
3. LES PENTES D'EXCAVATION DOIVENT ÊTRE SÉCURITAIRES ET DÉTERMINER SELON LES RECOMMANDATIONS DU RAPPORT GÉOTECHNIQUE.
4. S'IL Y A PRÉSENCE DE STRUCTURES EXISTANTES (ABRIS, PYLÔNES, ETC.) À PROXIMITÉ DES EXCAVATIONS, L'ENTREPRENEUR DEVRA CONCEVOIR, FOURNIR ET INSTALLER TOUS LES ÉLÉMENTS NÉCESSAIRE À LA STABILISATION DES PAROIS.
5. SE RÉFÉRER AU DOCUMENT "CONCEPTION ET FABRICATION DE NOUVEAUX ABRIS ET CABANONS, HEATH POINTE - ANTICOSTI - DEVIS DE PERFORMANCE" POUR LE DÉTAIL DE L'ÉTENDUE DES TRAVAUX.

NOTES

1. DIMENSIONS TO BE DETERMINED ACCORDING TO THE LOCATION OF THE SHELTER FOUNDATIONS
2. CHOOSE THE FOUNDATION TYPE THE NATURE OF THE SOIL IN PLACE OR THE GEOTECHNICAL REPORT.
3. EXCAVATION SIDE SLOPES SHALL BE SAFE AND ACCORDING TO THE GEOTECHNICAL REPORT.
4. IF THERE ARE EXISTING STRUCTURES NEAR THE EXCAVATIONS, THE CONTRACTOR SHALL DESIGN, FURNISH AND INSTALL THE ITEMS REQUIRED TO STABILIZE THE EXCAVATION WALLS.
5. REFER TO THE DOCUMENT "DESIGN AND FABRICATION OF NEW SHELTERS AND FIBERGLASS ACCESSORIES, HEATH POINTE - ANTICOSTI - PERFOMANCE" SPECIFICATIONS" FOR DETAIL SCOPE WORK.

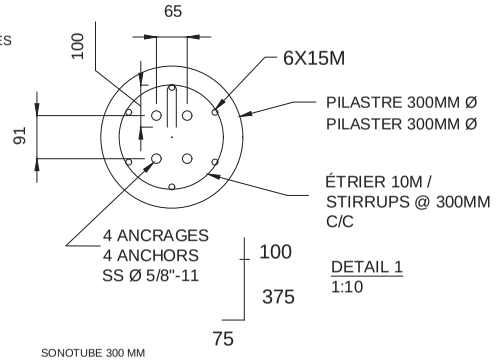

DETAIL 1
1:10

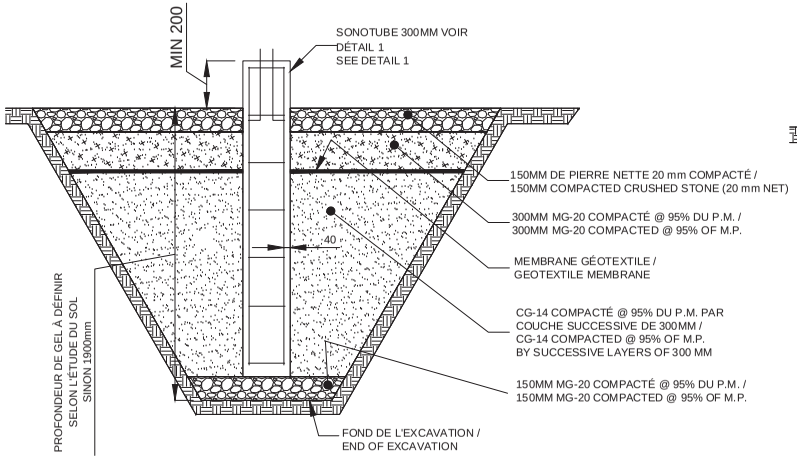

COUPE TYPE DE FONDATION DANS LE SOL MEUBLE /
FOUNDATION TYPICAL SECTION LOOSE SOIL
1:30

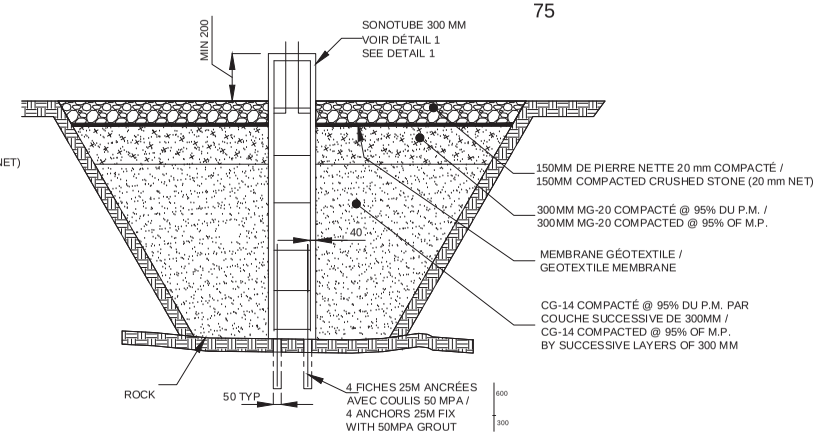

COUPE TYPE DE FONDATION AU ROC /
FOUNDATION TYPICAL SECTION ON THE ROCK
1:30

Fisheries and Oceans Canada / Pêches et Océans Canada
Canadian Coast Guard / Garde côtière Canadienne

Vendor / Sous-traitant

POUR INFORMATION SEULEMENT /
FOR INFORMATION ONLY

rev	description	by par	date
0	ÉMIS POUR CONSTRUCTION / ISSUED FOR CONSTRUCTION	JDM	2019-01-03

Asset - Actif

HEATH POINTE

SITE DE TÉLÉCOMUNICATIONS - TELECOMMUNICATIONS SITE

Drawing - Dessin
FONDATIONS POUR GALERIE DE L'ABRI DES GROUPES ÉLECTROGÈNES ET FONDATIONS ENDOMMAGÉES DE L'ÉTAGÈRE À CÂBLES
- FOUNDATIONS FOR GALLERY AND DAMAGED FOUNDATIONS OF THE CURRENT CABLE TRAY

drawn - dessiné	GDT — date 2019-01-04
designed - conception	MAT-COMP - R. LANGLOIS - S. PAGÉ — date 2017-09-25
checked - vérifié	J. DE MONTIGNY — date
approved - approuvé	J. DE MONTIGNY — date
CCG ref. no. - no. réf. GCC	DMYA8055-855
scale - échelle	TEL QU'INDIQ.
drawing no. - no. dessin	QE85500-B101-FO
sheet-feuille	AG-01
rev	0

ANSI B

QE85500-B101-FO

File / Fichier: QE85500-B101-FO.DWG - Printed / Imprimé: 2019/05/16 2:47

CAD PRODUCED DRAWING
PRODUIT PAR DAO

inches 0 1 — pouces 3 4

REPORT ANY ERRORS OR OMISSIONS TO ILS MANAGER
SIGNALER LES ERREURS OU LES OMISSIONS AU GESTIONNAIRE SLI

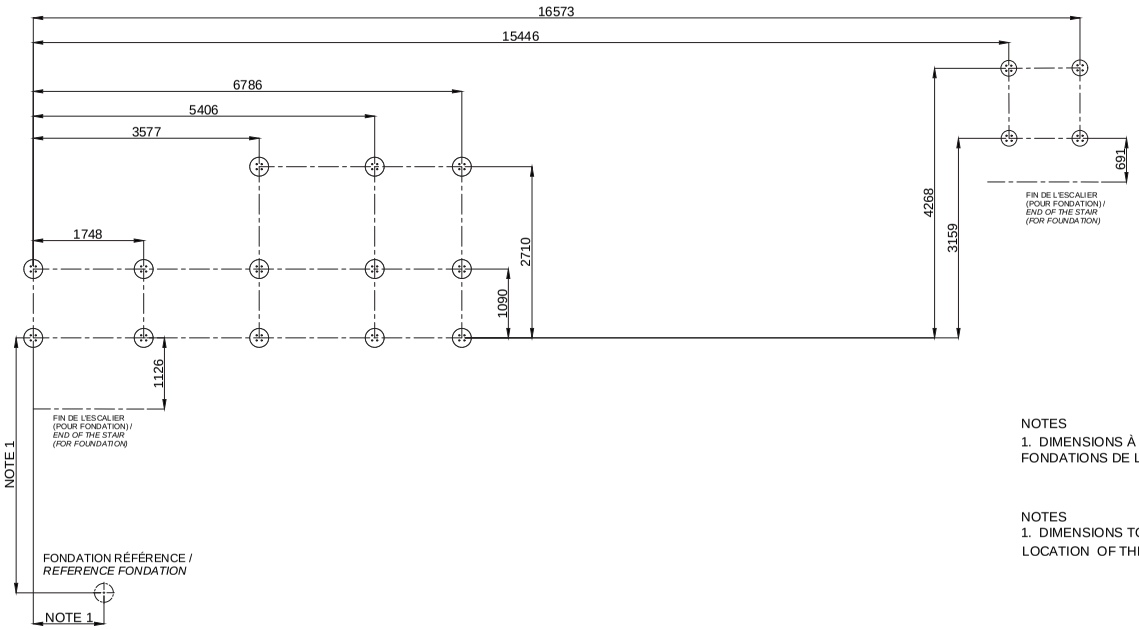

NOTES
1. DIMENSIONS À DÉTERMINER SELON L'EMPLACEMENT DES FONDATIONS DE L'ABRI

NOTES
1. DIMENSIONS TO BE DETERMINED ACCORDING TO THE LOCATION OF THE SHELTER FOUNDATIONS

VUE EN PLAN FONDATIONS POUR PASSERELLE ET GALERIE #2 - ABRI GROUPES ÉLECTROGÈNES / FOUNDATION PLAN VIEW FOR WALKWAY AND GALLERY #2 - GENERATOR SETS SHELTER
1:75

Fisheries and Oceans Canada / Pêches et Océans Canada
Canadian Coast Guard / Garde côtière Canadienne

Vendor / Sous-traitant

POUR INFORMATION SEULEMENT / FOR INFORMATION ONLY

rev	description	by par	date
0	ÉMIS POUR CONSTRUCTION / ISSUED FOR CONSTRUCTION	JDM	2019-01-03

Asset - Actif
HEATH POINTE
SITE DE TÉLÉCOMUNICATIONS - TELECOMMUNICATIONS SITE

Drawing - Dessin
FONDATIONS POUR LES COLONNES ADDITIONELLES (PASSERELLE ET GALERIE #2)
- NEW FOUNDATIONS (GATEWAY AND GALLERY #2)

drawn - dessiné: GDT	date: 2019-01-04
designed - conception: MAT-COMP - R. LANGLOIS - S. PAGÉ	date: 2017-09-25
checked - vérifié: J. DE MONTIGNY	date
approved - approuvé: J. DE MONTIGNY	date
CCG ref. no. - no. réf. GCC: DMYA8055-855	scale - échelle: TEL QU'INDIQ.
drawing no. - no. dessin: QE85500-B101-FO	sheet-feuille: AH-02 / rev: 0

QE85500-B101-FO

File / Fichier: QE85500-B101-FO.DWG - Printed / Imprimé: 2019/05/16 2:47

ANSI B

millimeters 0 1 2 3 — millimètres 5 6 7 8

4 3 2 1

CAD PRODUCED DRAWING
PRODUIT PAR DAO

inches / pouces

REPORT ANY ERRORS OR OMISSIONS TO ILS MANAGER
SIGNALER LES ERREURS OU LES OMISSIONS AU GESTIONNAIRE SLI

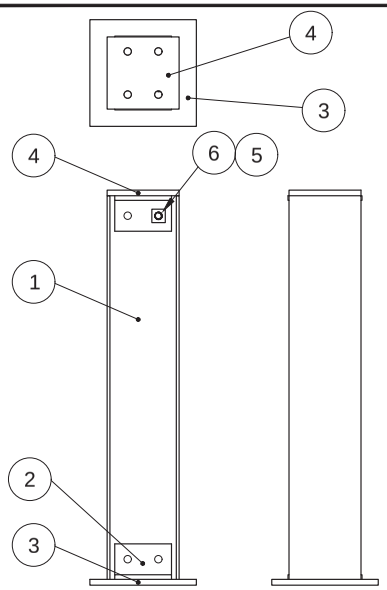

ASSEMBLAGE / ASSEMBLY

ÉCHELLE / SCALE 1:10

PLAQUE / PLATE 2
ÉCHELLE / SCALE 1 : 4

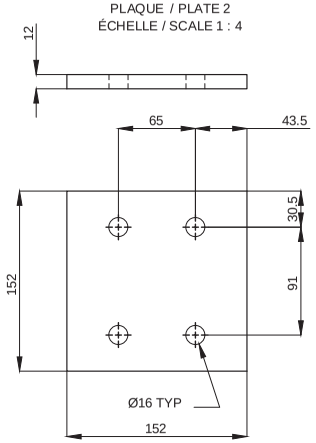

PLAQUE / PLATE 1
ÉCHELLE / SCALE 1 : 4

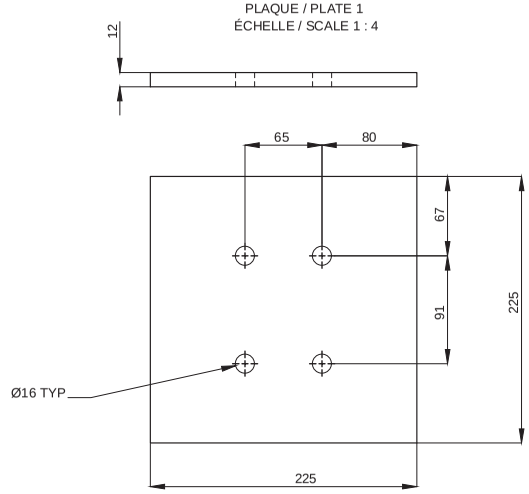

COLONNE / PILLAR

ÉCHELLE / SCALE 1:10

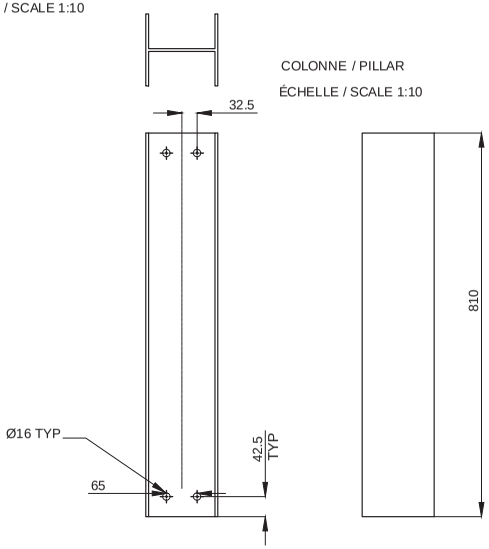

TOLERANCES GÉNÉRALES / GENERAL TOLERANCES:

LONGUEURS / LENGTH ± 1 MM
POSITIONS DES TROUS / HOLE LOCATIONS ± 0.5MM

PIÈCES À FOURNIR / PARTS TO SUPPLY

NO	NUMERO DE PIECE / PART NO	DESCRIPTION	QTE / QTY
1	COLONNE / PILLAR	H BEAM 152X152X6X710	4
2	CORNIÈRE / ANGLE	FIBERGLASS 80x80x10x120, FEUILLE 4	16
3	PLAQUE / PLATE 1	FIBERGLASS 225x225x12	4
4	PLAQUE / PLATE 2	FIBERGLASS 152x152x12	4
5	91315A235	FIBERGLASS TREADED ROD, 5/8"-11 MACMASTER OR EQUIVALENT	16
6	91332A035	FIBERGLASS SQUARE NUT, 5/8"-11 MCMASTER OR EQUIVALENT	16

* NOTE : L'ENTREPRENEUR DOIT RÉCUPÉRER LES NEUF (9) COLONNES EN MATERIAUX COMPOSITES EXISTANTES DE LA GALERIE #1, LES DOUZE (12) COLONNES DE LA PASSERELLE ET LES QUATRE (4) COLONNES DE LA GALERIE #2 SUR LE SITE. ELLES NE SONT DONC PAS À FOURNIR DANS LE PRÉSENT CONTRAT.

Fisheries and Oceans Canada / Pêches et Océans Canada
Canadian Coast Guard / Garde côtière Canadienne

Vendor / Sous-traitant

rev	description	by par	date
0	ÉMIS POUR APPEL D'OFFRES / ISSUED FOR TENDER	JDM	2019-01-03

Asset - Actif

HEATH POINTE

SITE DE TÉLÉCOMMUNICATIONS - TELECOMMUNICATIONS SITE

Drawing - Dessin

COLONNE DE GALERIE #1 ET PASSERELLE
ABRI GROUPES ÉLECTROGÈNES - GALLERY PILLAR

drawn - dessiné: GDT — date: 2019-01-04
designed - conception: MAT-COMP - R. LANGLOIS - S. PAGÉ — date: 2017-09-22
checked - vérifié: J. DE MONTIGNY — date:
approved - approuvé: J. DE MONTIGNY — date:

CCG ref. no. - no. réf. GCC: DMYA8055-855
scale - échelle: INDIQUÉE
drawing no. - no. dessin: QE85500-B101-GA
sheet-feuille: AA-05
rev: 0

QE85500-B101-GA

ANSI B

File / Fichier: QE85500-B101-GA_05.DWG - Printed / Imprimé: 2019/05/16 2:50

QE85500-B101-GA

millimeters / millimètres

MATÉRIAUX POUR LES DEUX AGRANDISSEMENTS DE GALERIE:

1. ÉLÉMENTS DE STRUCTURE PROFILÉS ET CAILLEBOTIS : MATÉRIAUX COMPOSITES FABRIQUÉS PAR PULTRUSION, À BASE DE FIBRE DE VERRE ET RÉSINE POLYESTER ISOPHTALIQUE OU VINYLESTER RÉSISTANT AU FEU ET CONFORMES À LA NORME ASTM E84, CLASSE A, INDICE DE PROPAGATION DE LA FLAMME DE 25 OU MOINS.

2. PROPRIÉTÉS MINIMALES REQUISES :

PROPERTY	TEST METHOD	VALUE
FLEXURAL STRENGTH	ASTM-D-790	LONGITUDINAL 37,000 PSI
		TRANSVERSE 10,000 PSI
FLEXURAL MODULUS	ASTM-D-790	LONGITUDINAL 2E6 PSI
		TRANSVERSE 1E6 PSI
COMPRESSIVE STRENGTH	ASTM-D-695	LONGITUDINAL 37,500 PSI
		TRANSVERSE 20,000 PSI
TENSILE STRENGTH	ASTM-0-638	37,500 PSI
MODULUS OF ELASTICITY		2.8E6 PSI
SHEAR STRENGTH	ASTM-D-732	7,000 PSI

3. CAILLEBOTIS DE 25MM DE HAUT, AYANT UN MAXIMUM D'OUVERTURE DE 60% FABRIQUÉS PAR PULTRUSION. SÉLECTIONNER LES ATTACHES DE CAILLEBOTIS COMPATIBLES ET RECOMMANDÉES PAR LE FOURNISSEUR (FIBERGRATE OU ÉQUIVALENT). LE CAILLEBOTIS PEUT ÊTRE EN PLUSIEURS PARTIES EN AUTANT QUE CHACUNE D'ELLES SOIT FIXÉE PAR AU MOINS QUATRE (4) ATTACHES.

4. BOULONNERIE ET ATTACHES EN ACIER INOXYDABLE 316 OU FIBRE DE VERRE.

MATERIALS FOR THE TWO GALLERY EXTENSIONS :

1. STRUCTURAL MEMBERS AND GRATINGS: PULTRUDED, FIBERGLASS AND ISOPHTHALIC POLYESTER OR VINYLESTER COMPOSITE MATERIALS, FIRE-RESISTANT IN ACCORDANCE WITH ASTM E84, CLASS A, FLAME SPREAD RATING OF 25 OR LESS.

2. REQUIRED MINIMUM PROPERTIES :

PROPERTY	TEST METHOD	VALUE
FLEXURAL STRENGTH	ASTM-D-790	LONGITUDINAL 37,000 PSI
		TRANSVERSE 10,000 PSI
FLEXURAL MODULUS	ASTM-D-790	LONGITUDINAL 2E6 PSI
		TRANSVERSE 1E6 PSI
COMPRESSIVE STRENGTH	ASTM-D-695	LONGITUDINAL 37,500 PSI
		TRANSVERSE 20,000 PSI
TENSILE STRENGTH	ASTM-0-638	37,500 PSI
MODULUS OF ELASTICITY		2.8E6 PSI
SHEAR STRENGTH	ASTM-D-732	7,000 PSI

3. GRATING 25MM HIGH, HAVING A MAXIMUM OPENING OF 60% MADE BY PULTRUSION. SELECT COMPATIBLE GRATING TIES RECOMMENDED BY THE SUPPLIER (FIBERGRATE OR EQUIVALENT). THE GRATING MAY BE IN SEVERAL PARTS AS LONG AS EACH OF THEM IS FIXED BY AT LEAST FOUR (4) FASTENERS.

4. NUTS AND FASTENERS IN 316 STAINLESS STEEL OR FIBERGLASS

Fisheries and Oceans Canada / Pêches et Océans Canada
Canadian Coast Guard / Garde côtière Canadienne

Vendor / Sous-traitant

rev	description	by par	date
0	ÉMIS POUR APPEL D'OFFRES / ISSUED FOR TENDER	JDM	2019-01-03

Asset - Actif

HEATH POINTE

SITE DE TÉLÉCOMMUNICATIONS - TELECOMMUNICATIONS SITE

Drawing - Dessin

MODIFICATIONS DE LA GALERIE ET AJOUT D'UNE EXTENSION - MODIFICATIONS OF THE GALLERY AND EXTENSIONS

drawn - dessiné	GDT	date 2019-01-04
designed - conception	MAT-COMP - R. LANGLOIS - S. PAGÉ	date 2017-09-22
checked - vérifié	J. DE MONTIGNY	date
approved - approuvé	J. DE MONTIGNY	date
CCG ref. no. - no. réf. GCC	DMYA8055-855	scale - échelle AUCUNE
drawing no. - no. dessin	QE85500-B101-GA	sheet-feuille V-01 / rev 0

ANSI B

QE85500-B101-GA

File / Fichier: QE85500-B101-GA_01.DWG - Printed / Imprimé: 2019/05/16 2:48

CAD PRODUCED DRAWING
PRODUIT PAR DAO

inches 0 1 — pouces 3 4

REPORT ANY ERRORS OR OMISSIONS TO ILS MANAGER
SIGNALER LES ERREURS OU LES OMISSIONS AU GESTIONNAIRE SLI

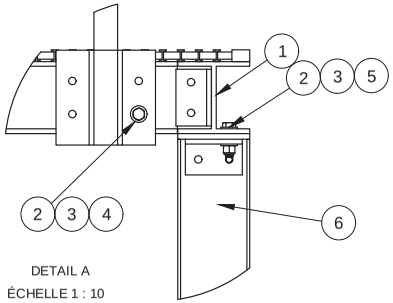

DETAIL A
ÉCHELLE 1 : 10

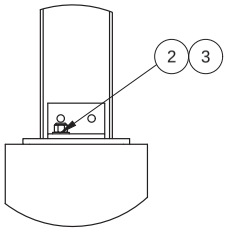

DETAIL B
ÉCHELLE 1 : 10

PIÈCES À FOURNIR / PARTS TO SUPPLY

NO.	NUMERO DE PIECE / PART NO	DESCRIPTION	MATERIAU / MATERIAL	QTE / QTY
1	CARDE-CORPS GÉNÉRIQUE TRONQUÉ EXISTANT / GENERIC TRUNCATED GUARD	GARDE-CORPS RÉCUPÉRÉ DE LA PASSERELLE TRONQUÉE / RECOVERED GUARD OF THE TRUNCATED GATEWAY	FIBRE DE VERRE / GLASS FIBER	1
2	CORNIÈRE / ANGLE 50x50x6MM	CORNIÈRE D'ACCOUPLEMENT / COUPLING ANGLE 400MM LONG.	FIBRE DE VERRE / GLASS FIBER	4
3	MCMASTER 90107A051OU/OR EQUIVALENT	SS WASHER, OVERSIZED, 3/8" SCREW SIZE, 1" OD, 0.04"- 0.06" THICKNESS	STAINLESS STEEL 316	16
4	MCMASTER 90715A145 OU/OR EQUIVALENT	SS NYLON-INSERT LOCKNUT, SUPER-CORROSION-RESISTANT, 3/8"-16	STAINLESS STEEL 316	8
5	MCMASTER 92198A637 OU/OR EQUIVALENT	SS STEEL HEX HEAD SCREW, 3/8"-16 THREAD SIZE, 3-1/4" LONG	STAINLESS STEEL 316	8
6	COLONNE / PILLAR	QE85500-B101-GA	MATÉRIAUX COMPOSITES	4

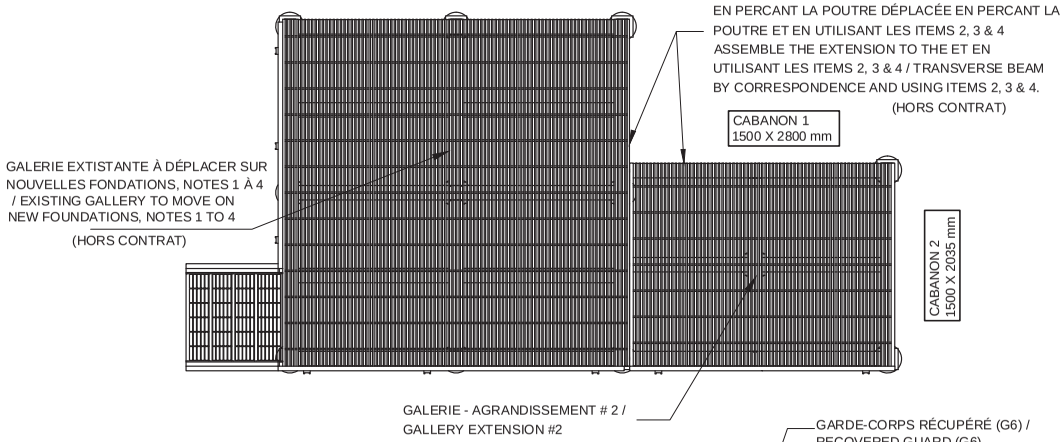

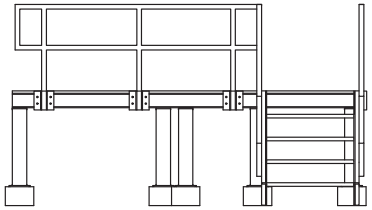

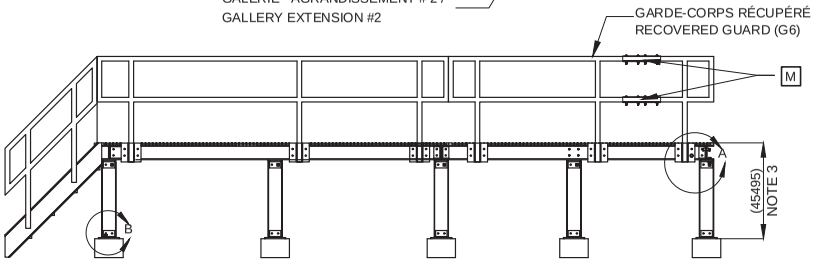

Fisheries and Oceans Canada / Pêches et Océans Canada
Canadian Coast Guard / Garde côtière Canadienne

Vendor / Sous-traitant

rev	description	by par	date
0	ÉMIS POUR APPEL D'OFFRES / ISSUED FOR TENDER	JDM	2019-01-03

Asset - Actif

HEATH POINTE

SITE DE TÉLÉCOMMUNICATIONS - TELECOMMUNICATIONS SITE

Drawing - Dessin
MODIFICATION DE PASSERELLE, GALERIE ET GARDE-CORPS - MODIFICATION OF WALKWAY, GALLERY AND GUARD RAIL

drawn - dessiné	GDT	date 2019-01-04
designed - conception	MAT-COMP - R. LANGLOIS - S. PAGÉ	date 2017-09-22
checked - vérifié	J. DE MONTIGNY	date
approved - approuvé	J. DE MONTIGNY	date
CCG ref. no. - no. réf. GCC	DMYA8055-855	scale - échelle 1:50
drawing no. - no. dessin	QE85500-B101-GA	sheet-feuille X-02 / rev 0

ANSI B

QE85500-B101-GA

File / Fichier: QE85500-B101-GA_02.DWG - Printed / Imprimé: 2019/05/16 2:48

millimeters 0 1 2 3 — millimètres 5 6 7 8

4 3 2 1

CAD PRODUCED DRAWING
PRODUIT PAR DAO

inches / pouces

REPORT ANY ERRORS OR OMISSIONS TO ILS MANAGER
SIGNALER LES ERREURS OU LES OMISSIONS AU GESTIONNAIRE SLI

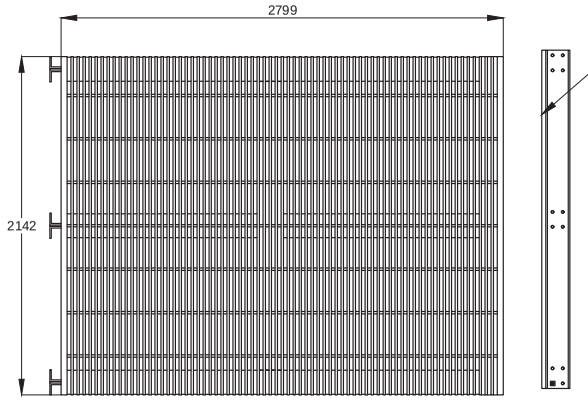

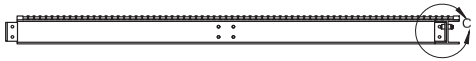

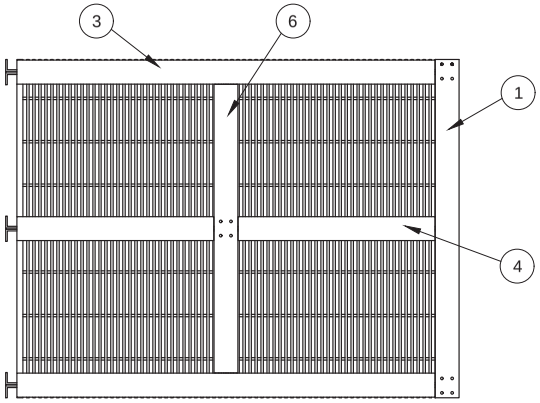

AGRANDISSEMENT 2 / EXTENSION 2

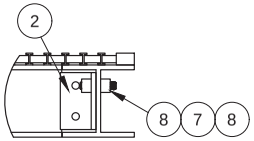

DETAIL C
ÉCHELLE / SCALE 1 : 10

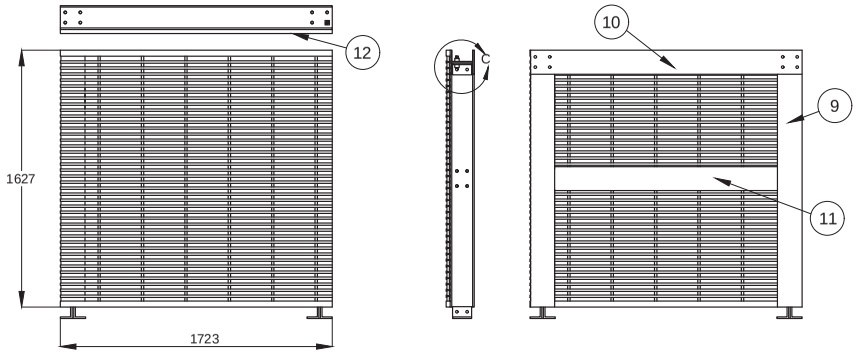

AGRANDISSEMENT 1 / EXTENSION 1

AGRANDISSEMENT 1 - PIÈCES À FOURNIR / EXTENSION 1 - PARTS TO SUPPLY

NO	NO DE PIECE / PART NO	DESCRIPTION	QTE / QTY
2	CORNIÈRE / ANGLE	FIBERGLASS 80x80x10x120, FEUILLE 4	12
5	CAILLEBOTIS / GRATING	1627X1723X25, NOTE 8	1
7	91315A235	MACMASTER OR EQUIVALENT	20
8	91332A035	FIBERGLASS SQUARE NUT, 5/8"-11 MACMASTER OR EQUIVALENT	40
9	POUTRE / BEAM 9	H BEAM 152X152X10X1627	2
10	POUTRE / BEAM 10	H BEAM 152X152X10X1723	1
11	POUTRE / BEAM 11	H BEAM 152X152X10X1411 FIBERGLASS TREADED ROD, 5/8"-11	1

AGRANDISSEMENT 2 - PIÈCES À FOURNIR / EXTENSION 2 - PARTS TO SUPPLY

NO	NO DE PIECE / PART NO	DESCRIPTION	QTE / QTY
1	POUTRE / BEAM 1	H BEAM 152X152X10X2142	1
2	CORNIÈRE / ANGLE	FIBERGLASS 80x80x10x120, FEUILLE 4	20
3	POUTRE / BEAM 3	H BEAM 152X152X10X2790	2
4	POUTRE / BEAM 4	H BEAM 152X152X10X1390	2
5	CAILLEBOTIS / GRATING	2142X2799X25, NOTE 8	1
6	POUTRE / BEAM 6	H BEAM 152X152X10X1972	1
7	91315A235	FIBERGLASS TREADED ROD, 5/8"-11 MACMASTER OR EQUIVALENT	40
8	91332A035	FIBERGLASS SQUARE NUT, 5/8"-11 MACMASTER OR EQUIVALENT	80

Fisheries and Oceans Canada / Pêches et Océans Canada
Canadian Coast Guard / Garde côtière Canadienne

Vendor / Sous-traitant

rev	description	by par	date
0	ÉMIS POUR APPEL D'OFFRES / ISSUED FOR TENDER	JDM	2019-01-03

Asset - Actif

HEATH POINTE

SITE DE TÉLÉCOMMUNICATIONS - TELECOMMUNICATIONS SITE

Drawing - Dessin

EXTENSION DE GALERIE ET PASSERELLE - GALLERY AND WALKWAY EXTENSION

drawn - dessiné	GDT	date 2019-01-04
designed - conception	MAT-COMP - R. LANGLOIS - S. PAGÉ	date 2017-09-22
checked - vérifié	J. DE MONTIGNY	date
approved - approuvé	J. DE MONTIGNY	date
CCG ref. no. - no. réf. GCC	DMYA8055-855	scale - échelle 1:30
drawing no. - no. dessin	QE85500-B101-GA	sheet-feuille Y-03 / rev 0

ANSI B

QE85500-B101-GA

File / Fichier: QE85500-B101-GA_03.DWG - Printed / Imprimé: 2019/05/16 2:48

millimeters / millimètres

CAD PRODUCED DRAWING
PRODUIT PAR DAO

inches / pouces

REPORT ANY ERRORS OR OMISSIONS TO ILS MANAGER
SIGNALER LES ERREURS OU LES OMISSIONS AU GESTIONNAIRE SLI

POUTRE / BEAM 1

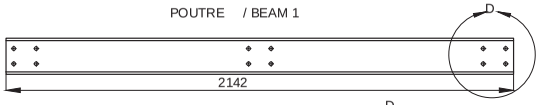

POUTRE / BEAM 10

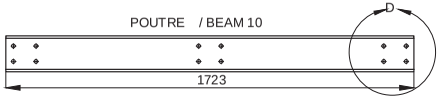

POUTRE / BEAM 3

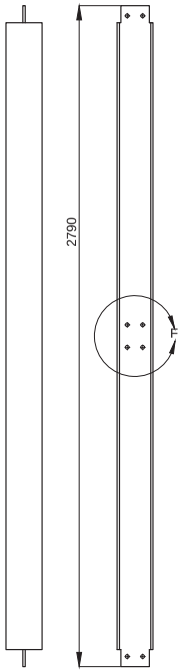

POUTRE / BEAM 9

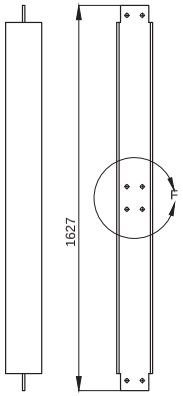

POUTRE / BEAM 4

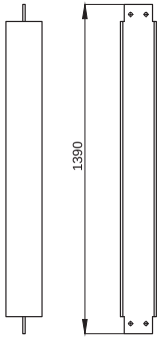

POUTRE / BEAM 11

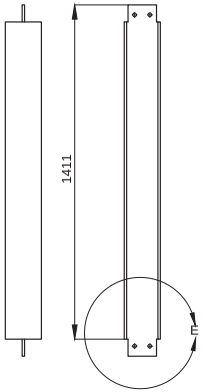

POUTRE / BEAM 6

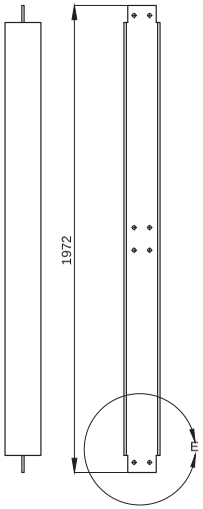

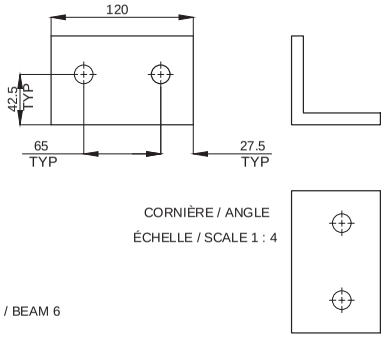

CORNIÈRE / ANGLE

ÉCHELLE / SCALE 1 : 4

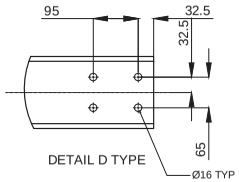

DETAIL D TYPE

ÉCHELLE / SCALE 1 : 10

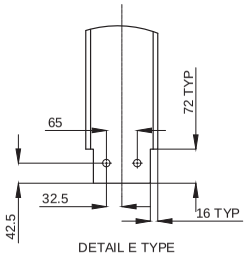

DETAIL E TYPE

ÉCHELLE / SCALE 1 : 10

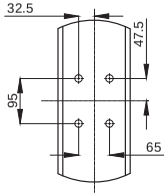

DETAIL F TYPE

ÉCHELLE / SCALE 1 : 10

TOLERANCES GÉNÉRALES / GENERAL TOLERANCES:

LONGUEURS / LENGTH	± 1 MM
POSITIONS DES TROUS / HOLE LOCATIONS	± 0.5MM

Fisheries and Oceans Canada / Pêches et Océans Canada
Canadian Coast Guard / Garde côtière Canadienne

Vendor / Sous-traitant

rev	description	by par	date
0	ÉMIS POUR APPEL D'OFFRES / ISSUED FOR TENDER	JDM	2019-01-03

Asset - Actif

HEATH POINTE

SITE DE TÉLÉCOMMUNICATIONS - TELECOMMUNICATIONS SITE

Drawing - Dessin

EXTENSION DE GALERIE ET PASSERELLE PIECES À FOURNIR - GALLERY AND WALKWAY EXTENSION PARTS TO BE FURNISHED

drawn - dessiné	date GDT 2019-01-04
designed - conception	date MAT-COMP - R. LANGLOIS - S. PAGÉ 2017-09-22
checked - vérifié	date J. DE MONTIGNY
approved - approuvé	date J. DE MONTIGNY
CCG ref. no. - no. réf. GCC	scale - échelle 1:20
drawing no. - no. dessin	sheet-feuille Z-04 / rev 0

QE85500-B101-GA

ANSI B

File / Fichier: QE85500-B101-GA_04.DWG - Printed / Imprimé: 2019/05/16 2:49

QE85500-B101-GA

millimeters / millimètres

CAD PRODUCED DRAWING
PRODUIT PAR DAO

inches 0 1

pouces 3 4

REPORT ANY ERRORS OR OMISSIONS TO ILS MANAGER
SIGNALER LES ERREURS OU LES OMISSIONS AU GESTIONNAIRE SLI

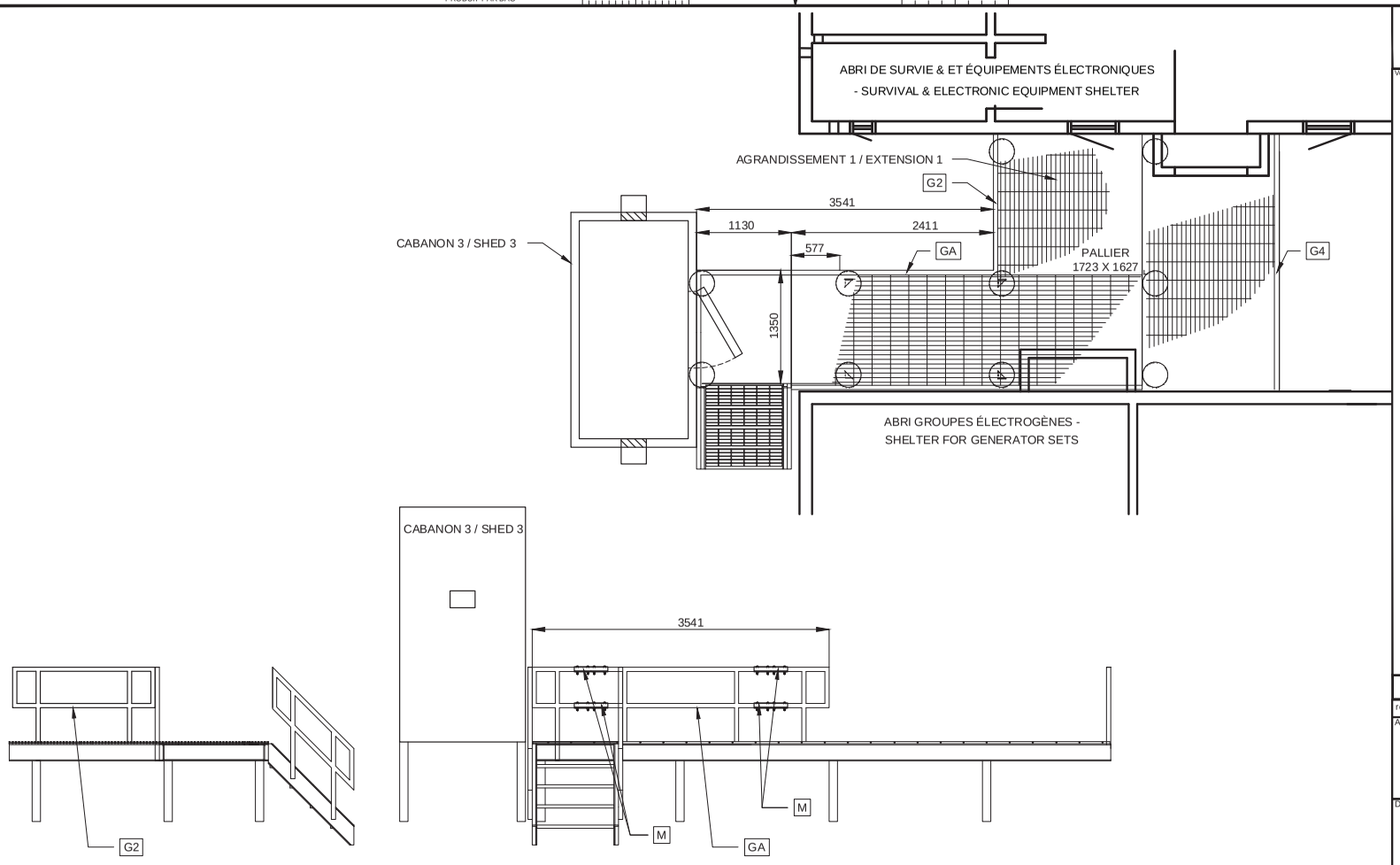

MODIFICATION PASSERELLE /
MODIFICATION OF GATEWAY

Fisheries and Oceans Canada / Pêches et Océans Canada
Canadian Coast Guard / Garde côtière Canadienne

Vendor / Sous-traitant

rev	description	by par	date
0	ÉMIS POUR APPEL D'OFFRES / ISSUED FOR TENDER	JDM	2019-01-03

Asset - Actif

HEATH POINTE

SITE DE TÉLÉCOMMUNICATIONS
- TELECOMMUNICATIONS SITE

Drawing - Dessin

MODIFICATION DE PASSERELLE
ET GARDE-CORPS -
MODIFICATION OF GATEWAY
AND GUARD RAIL

drawn - dessiné: GDT	date: 2019-01-04
designed - conception: MAT-COMP - R. LANGLOIS - S. PAGÉ	date: 2017-09-22
checked - vérifié: J. DE MONTIGNY	date
approved - approuvé: J. DE MONTIGNY	date
CCG ref. no. - no. réf. GCC: DMYA8055-855	scale - échelle: 1:50
drawing no. - no. dessin: QE85500-B101-PA	sheet-feuille: AB-01 / rev: 0

QE85500-B101-PA

ANSI B

File / Fichier: QE85500-B101-PA_01.DWG - Printed / Imprimé: 2019/05/16 2:50

millimeters 0 1 2 3 — millimètres 5 6 7 8

4 3 2 1

A B C

CAD PRODUCED DRAWING
PRODUIT PAR DAO

inches / pouces

REPORT ANY ERRORS OR OMISSIONS TO ILS MANAGER
SIGNALER LES ERREURS OU LES OMISSIONS AU GESTIONNAIRE SLI

PIÈCES À FOURNIR / PARTS TO SUPPLY

NO.	NUMERO DE PIECE / PART NO	DESCRIPTION	MATERIAU / MATERIAL	QTE / QTY	À FOURNIR / TO SUPPLY
1	GARDE-CORPS GÉNÉRIQUE TRONQUER / GENERIC TRUNCATED GUARD	GARDE-CORPS EXISTANT RÉCUPÉRÉ / RECOVERED GUARD	FIBRE DE VERRE / GLASS FIBER	2	NON / NO
2	CORNIÈRE / ANGLE 50x50x6MM	CORNIÈRE D'ACCOUPLEMENT / COUPLING ANGLE 400MM LONG.	FIBRE DE VERRE / GLASS FIBER	16	OUI / YES
3	MCMASTER 90107A051OU/OR EQUIVALENT	SS WASHER, OVERSIZED, 3/8" SCREW SIZE, 1" OD, 0.04"- 0.06" THICKNESS	STAINLESS STEEL 316	64	OUI / YES
4	MCMASTER 90715A145 OU/OR EQUIVALENT	SS NYLON-INSERT LOCKNUT, SUPER-CORROSION-RESISTANT, 3/8"-16	STAINLESS STEEL 316	32	OUI / YES
5	MCMASTER 92198A637 OU/OR EQUIVALENT	SS STEEL HEX HEAD SCREW, 3/8"-16 THREAD SIZE, 3-1/4" LONG	STAINLESS STEEL 316	32	OUI / YES

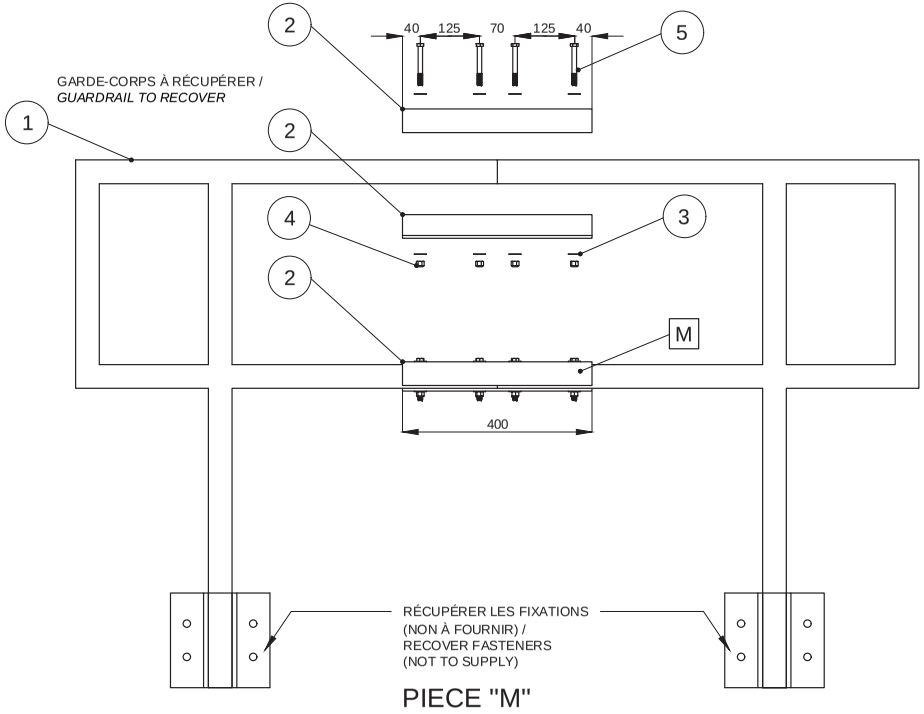

PIECE "M"

Fisheries and Oceans Canada / Pêches et Océans Canada
Canadian Coast Guard / Garde côtière Canadienne

Vendor / Sous-traitant

rev	description	by par	date
0	ÉMIS POUR APPEL D'OFFRES / ISSUED FOR TENDER	JDM	2019-01-03

Asset - Actif

HEATH POINTE

SITE DE TÉLÉCOMMUNICATIONS - TELECOMMUNICATIONS SITE

Drawing - Dessin

MODIFICATION TYPE DES DEUX GARDE-CORPS - TYPE
MODIFICATION OF TWO GUARDRAILS

		date
drawn - dessiné	GDT	2019-01-04
designed - conception	MAT-COMP - R. LANGLOIS - S. PAGÉ	2017-09-22
checked - vérifié	J. DE MONTIGNY	
approved - approuvé	J. DE MONTIGNY	

CCG ref. no. - no. réf. GCC	DMYA8055-855	scale - échelle	1:10
drawing no. - no. dessin	QE85500-B101-PA	sheet-feuille	AC-02
		rev	0

ANSI B

File / Fichier: QE85500-B101-PA_02.DWG - Printed / Imprimé: 2019/05/16 2:51

QE85500-B101-PA

millimeters / millimètres

CAD PRODUCED DRAWING
PRODUIT PAR DAO

REPORT ANY ERRORS OR OMISSIONS TO ILS MANAGER
SIGNALER LES ERREURS OU LES OMISSIONS AU GESTIONNAIRE SLI

ÉLÉVATION ARRIÈRE /
REAR ELEVATION

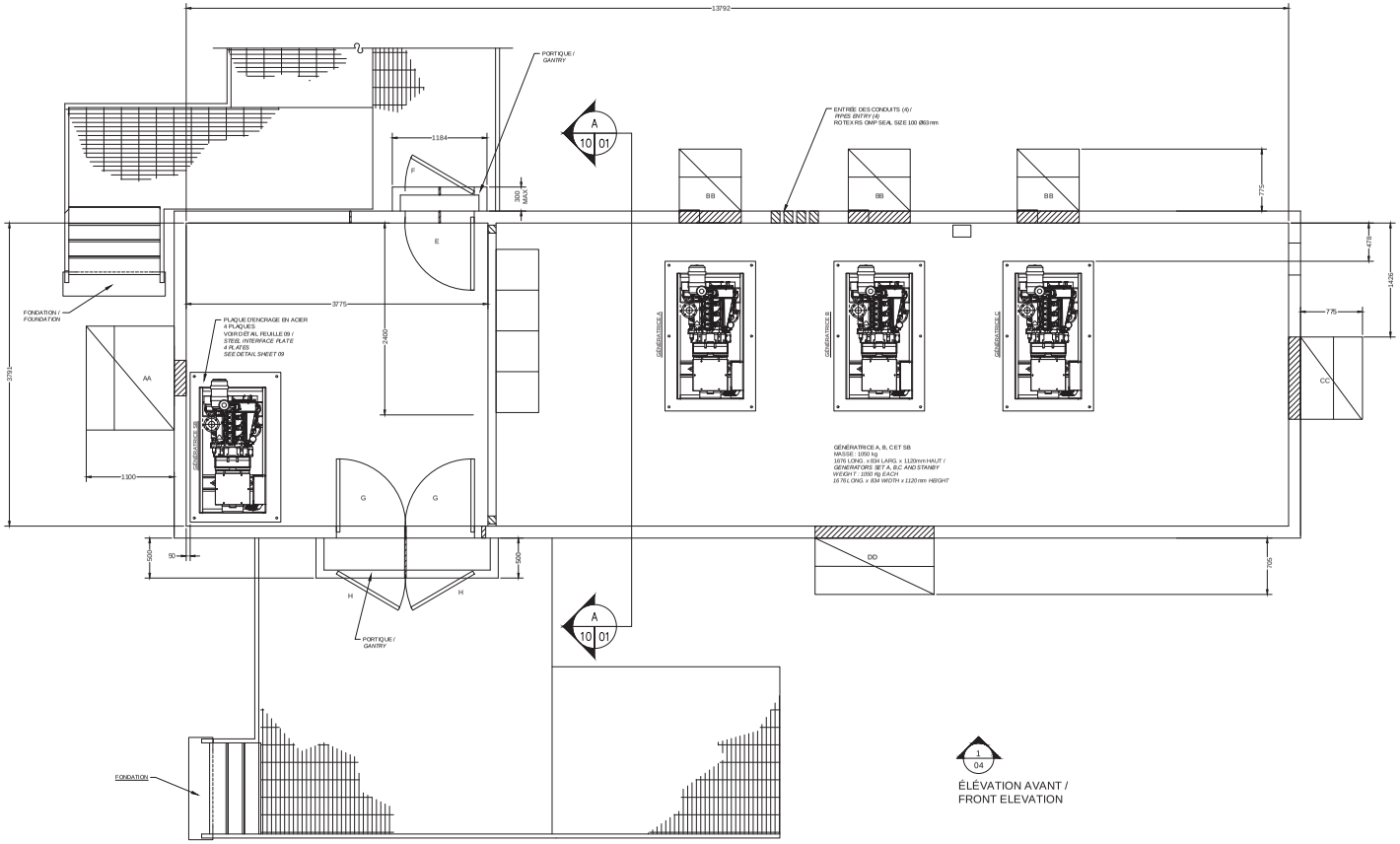

PROFIL GAUCHE /
LEFT PROFILE

PROFIL DROIT /
RIGHT PROFILE

ÉLÉVATION AVANT /
FRONT ELEVATION

DIMENSIONS DES COLS DE CYGNE ET DES PORTES / *GOOSENECK AND DOORS SIZES*			
IDENTIFICATION	DIMENSIONS mm	OUVERTURES NETTES / OPENINGS mm	GRILLAGE ANTI-OISEAU / NON-BIRDS SCREEN 1/2" X 1/2"
AA	1300H X 1300L X 1100P	445 X 445	OUI / YES
BB	775H X 775L X 775P	775 X 775	OUI / YES
CC	775H X 1029L X 775P	1029 X 775	OUI / YES
DD	705H X 1409L X 705P	1409 X 705	OUI / YES
E	2134H X 914L	2134H X 914L	N/A
F	2134H X 914L	2134H X 914L	N/A
G	2134H X 914L	2134H X 914L	N/A
H	2134H X 914L	2134H X 914L	N/A

NOTES GÉNÉRALES APPLICABLES AUX DEUX ABRIS:

1. AJUSTER LES DIMENSIONS DES OUVERTURES SELON LES STANDARDS DE PORTES ET FENÊTRES CHOISIES.
2. S'ASSURER D'UNE HAUTEUR LIBRE MINIMALE À L'INTÉRIEUR DES DEUX ABRIS DE 2875 mm À PARTIR DU REVÊTEMENT DU PLANCHER JUSQU'AU FINI DU PLAFOND.
3. CÂBLE PLÂT EN CUIVRE 0.004" X 2" X 10.5' #A811A26F50 DE ERICO OU #1181-2X18 DE 3 m INSTALLÉ ET COLLÉ SOUS LES TUILES ANTISTATIQUES. LE CÂBLE PLÂT DEVRA ÊTRE RELIÉ À LA PLAQUE DE MALT VIA UN CÂBLE #6 VERT. LE RACCORDEMENT DU CÂBLE VERT #6 AU CÂBLE PLAT DEVRA ÊTRE FAIT VIA UN TERMINAL #LCCX6-38D-6 D E PANDUIT. VALIDER LA POSITION DU CÂBLE AVEC LE REPRÉSENTANT DE LA GCC AVANT DE L'INSTALLER (SECTION ÉQUIPEMENTS ÉLECTRONIQUES).
4. LORS DE LA CONCEPTION DES ABRIS, VALIDER LES DIMENSIONS ET LES POSITIONS DE TOUTES LES OUVERTURES DONT CELLES POUR LA VENTILLATION. TOUTES LES COTES INDIQUÉES AUX PLAN SONT À TITRE INDICATIF À L'EXEPTION DE LA HAUTEUR LIBRE (2875 mm) ET LES DIMENSIONS INTÉRIEURES DES PIÈCES.
5. LA GCC FOURNIRA LES SPÉCIFICATIONS TECHNIQUES DE LA TOILETTE ÉLECTRIQUE ET DE L'ÉCHANGEUR D'AIR DÉJÀ ACHETÉS POUR PERMETTRE LEUR INSTALLATION DANS LE PRÉSENT CONTRAT (SECTION SURVIE) - VOIR ANNEXE AU DEVIS. CECI EXCLUT LE RACCORDEMENT ÉLECTRIQUE.
6. MANCHONS ISOLÉS DE TYPE FIRESTOP - READY SLEEVE - MODÈLE FS401.
7. LES NOUVEAUX PORTIQUES DOIVENT S'INSÉRER SUR LES PASSERELLES ET LES GALERIES SANS CONFLIT AVEC LES GARDE-CORPS ET ESCALIERS.

GENERALE NOTES FOR THE TWO SHELTERS:

1. *ADJUSTING THE OPENING SIZES ACCORDING TO THE STANDARD OF DOORS AND WINDOWS CHOSEN.*
2. *ENSURE A MINIMUM CLEARANCE INSIDE OF THE TWO SHELTERS OF 2875mm BETWEEN THE FINISHED CEILING AND FLOOR.*
3. *FLAT COPPER CABLE 0.004" X 2" X 10.5' #A811A26F50FROM ERICO OR 1181-2 X 18 X 3m INSTALLED AND GLUED UNDER THE ANTISTATIC TILES. VERIFY THE CABLE LOCATION WITH THE REPRESENTATION OF THE CCG BEFORE THE INSTALLATION (ELECTRONIC EQUIPMENTS SECTION).*
4. *DURING THE DESIGN OF SHELTERS, VALIDATE THE SIZES AND LOCATION OF ALL OPENINGS INCLUDING THOSE FOR VENTILLATION. ALL IS INDICATIVE ON DRAWINGS EXCEPTED FOR THE CLEARANCE (2875 mm) AND THE INNER DIMENSIONS OF EACH ROOM.*
5. *THE CCG WILL PROVIDE THE TECHNICAL SPECIFICATION FOR THE ELECTRIC TOILET AND AIR EXCHANGER BOUGHT TO EXPLAIN THEIR INSTALLATION IN THIS CONTRACT. (SURVIVAL SECTION). SEE ANNEX IN SPECIFICATIONS. EXCLUDED THE ELECTRICAL CONNECTION.*
6. *INSULATED SLEEVES FIRESTOP TYPE - READY SLEEVE - FS401 MODEL.*
7. *THE NEW GANTRIES MUST BE INSERTED ON THE WALKWAY OR ON THE GALLERY WITHOUT CONFLICT WITH GUARDRAILS AND STAIRS.*

Fisheries and Oceans Canada / Pêches et Océans Canada
Canadian Coast Guard / Garde côtière Canadienne

Vendor Information / Sous-traitant

rev	description	by par	date
0	POUR SOUMISSION	JDM	2019-04

Asset - Actif

HEATH POINTE

SITE DE TÉLÉCOMMUNICATIONS - TELECOMMUNICATIONS SITE

Drawing - Dessin

ABRI GROUPES ÉLECTROGÈNES - SHELTER FOR GENERATORS SETS ENCOMBREMENT PLANCHERS ET COLS DE CYGNE

designed - conception: J. DE MONTIGNY — date: 2018-12-19
drawn - dessiné: GDT — date:
checked - vérifié: J. DE MONTIGNY — date:
approved - approuvé: J. DE MONTIGNY — date:

CCG ref. no. - no. réf. GCC: DMYA8055-855 — scale - échelle: 1:30
drawing no. - no. dessin: QE85500-B201 — sheet-feuille: K-01 — rev-rév: 0

A1

QE85500-B201

File / Fichier: QE85500-B201.DWG - Printed / Imprimé: 2019/05/16 2:36

CAD PRODUCED DRAWING
PRODUIT PAR DAO

REPORT ANY ERRORS OR OMISSIONS TO ILS MANAGER
SIGNALER LES ERREURS OU LES OMISSIONS AU GESTIONNAIRE SLI

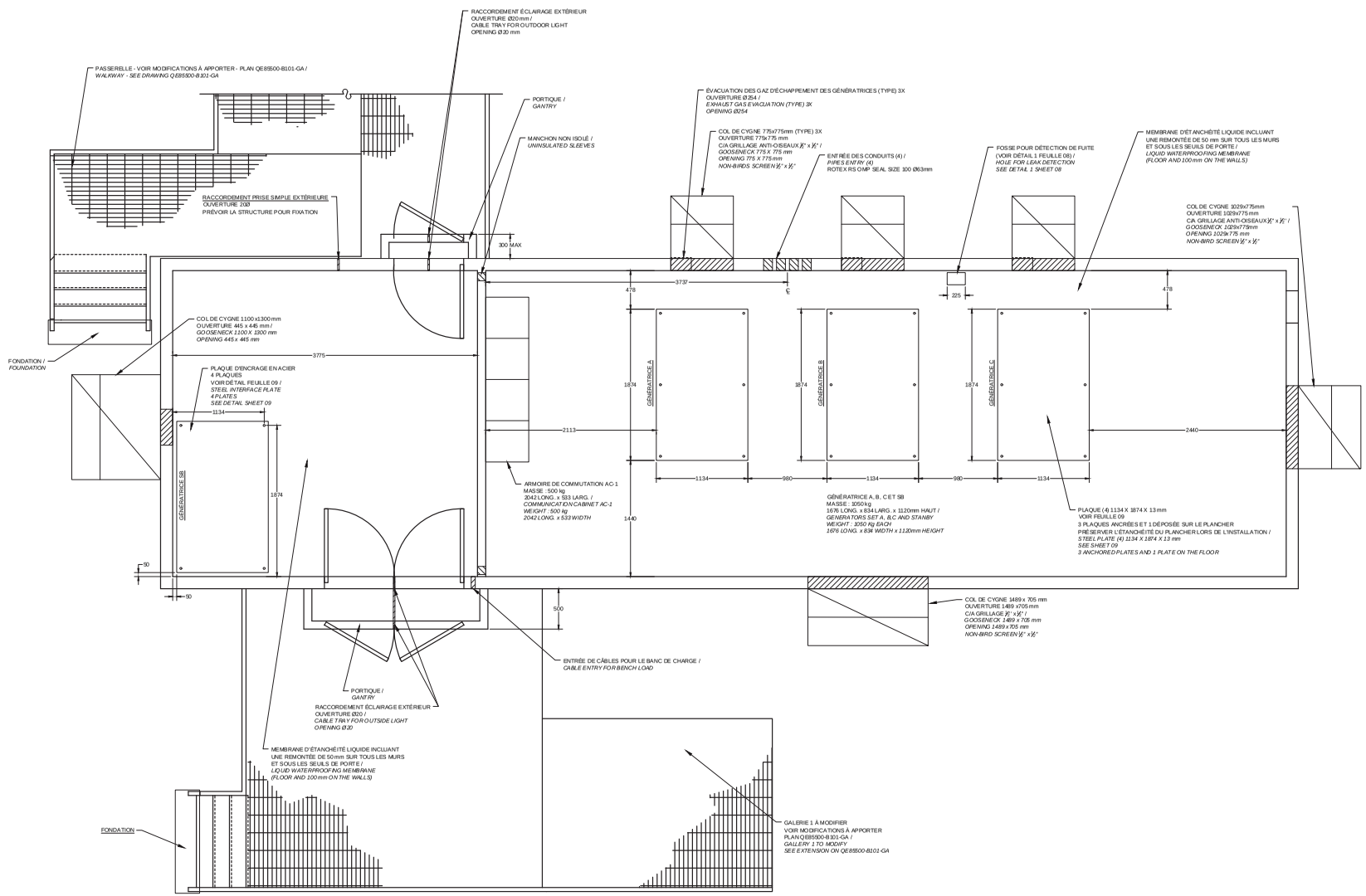

1 VUE EN PLAN / PLAN VIEW

ÉCHELLE / SCALE : 1:25

Fisheries and Oceans Canada / Pêches et Océans Canada
Canadian Coast Guard / Garde côtière Canadienne

Vendor Information / Sous-traitant

rev	description	by / par	date
0	POUR SOUMISSION	JDM	2019-04

Asset - Actif

HEATH POINTE

SITE DE TÉLÉCOMMUNICATIONS - TELECOMMUNICATIONS SITE

Drawing - Dessin

ABRI GROUPES ÉLECTROGÈNES - SHELTER FOR GENERATORS SETS ENCOMBREMENT DE PLANCHER ET OUVERTURES MURALES

designed - conception: J. DE MONTIGNY — date: 2018-12-19
drawn - dessiné: GDT — date:
checked - vérifié: J. DE MONTIGNY — date:
approved - approuvé: J. DE MONTIGNY — date:

CCG ref. no. - no. réf. GCC: DMYA8055-855
scale - échelle: 1:25
drawing no. - no. dessin: QE85500-B201
sheet feuille: L-02
rev-rév: 0

A1

QE85500-B201

File / Fichier: QE85500-B201.DWG - Printed / Imprimé: 2019/05/16 2:36

CAD PRODUCED DRAWING
PRODUIT PAR DAO

REPORT ANY ERRORS OR OMISSIONS TO ILS MANAGER
SIGNALER LES ERREURS OU LES OMISSIONS AU GESTIONNAIRE SLI

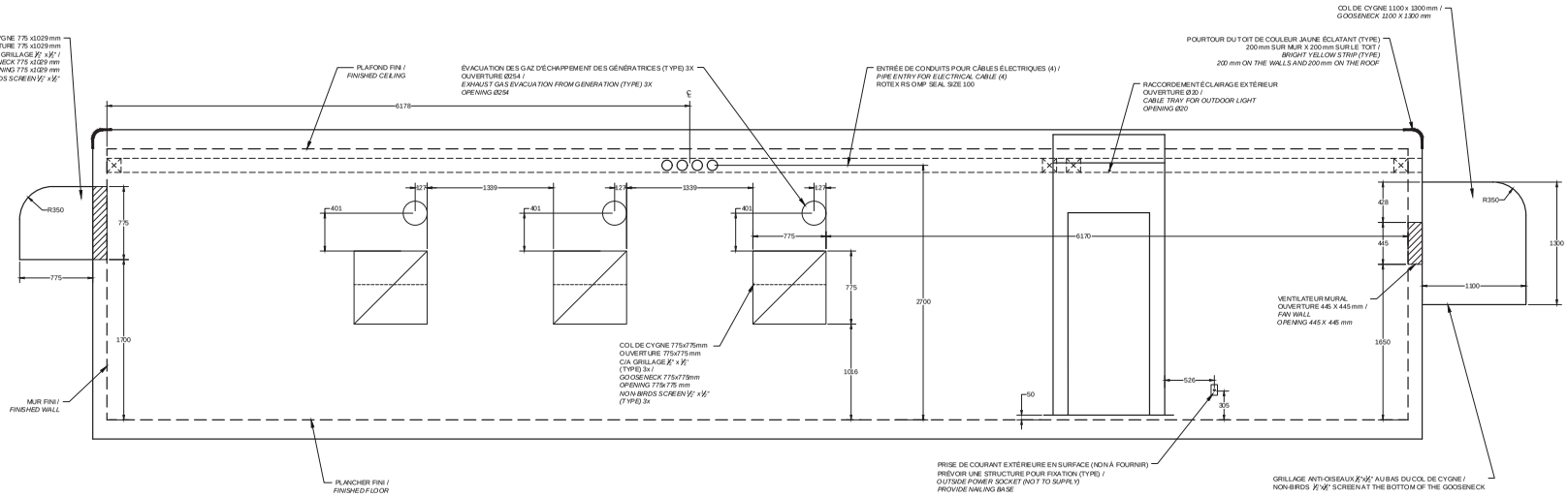

1 VUE ÉLÉVATION ARRIÈRE / REAR ELEVATION VIEW

ÉCHELLE / SCALE : 1:25

Fisheries and Oceans Canada / Pêches et Océans Canada
Canadian Coast Guard / Garde côtière Canadienne

Vendor Information / Sous-traitant

rev	description	by par	date
0	POUR SOUMISSION	JDM	2019-04

Asset - Actif

HEATH POINTE

SITE DE TÉLÉCOMMUNICATIONS - TELECOMMUNICATIONS SITE

Drawing - Dessin

ABRI GROUPES ÉLECTROGÈNES - OUVERTURES MURALES / SHELTER FOR GENERATORS SETS WALL OPENINGS

designed - conception: J. DE MONTIGNY — date: 2018-12-19
drawn - dessiné — date
checked - vérifié — date: J. DE MONTIGNY
approved - approuvé — date: J. DE MONTIGNY

CCG ref. no. - no. réf. GCC: DMYA8055-855
scale - échelle: 1:25
drawing no. - no. dessin: QE85500-B201
sheet-feuille: M-03
rev-rév: 0

A1

QE85500-B201

File / Fichier: QE85500-B201.DWG - Printed / Imprimé: 2019/05/16 2:36

CAD PRODUCED DRAWING
PRODUIT PAR DAO

REPORT ANY ERRORS OR OMISSIONS TO ILS MANAGER
SIGNALER LES ERREURS OU LES OMISSIONS AU GESTIONNAIRE SLI

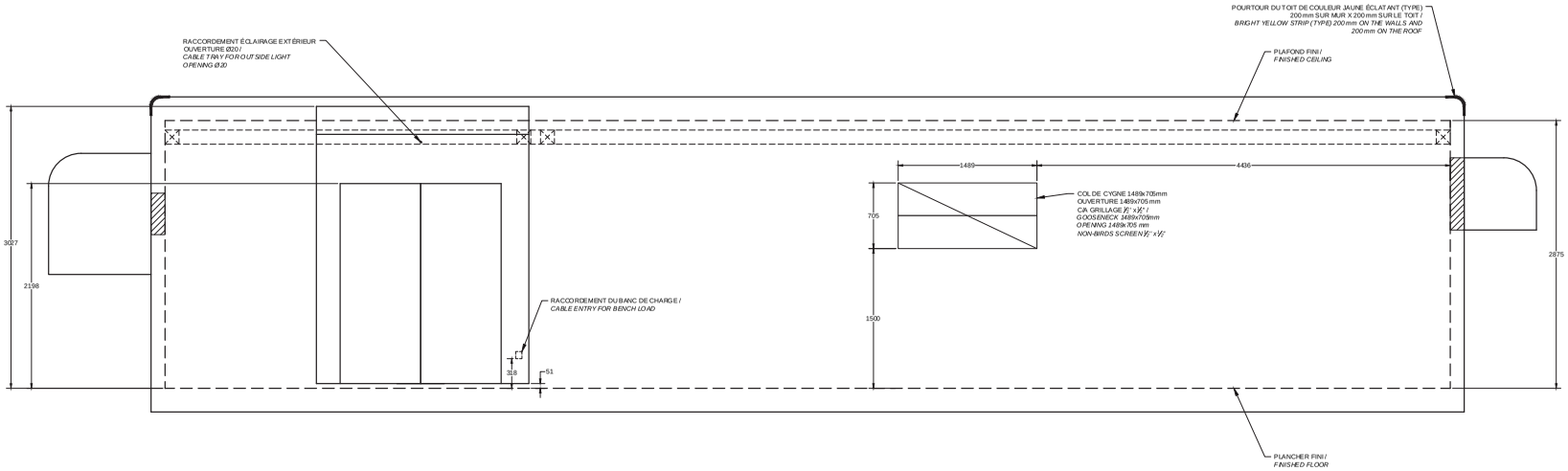

1 VUE ÉLÉVATION AVANT / FRONT ELEVATION VIEW

ÉCHELLE / SCALE : 1:25

Fisheries and Oceans Canada / Pêches et Océans Canada
Canadian Coast Guard / Garde côtière Canadienne

Vendor Information / Sous-traitant

rev	description	by par	date
0	POUR SOUMISSION	JDM	2019-04

Asset - Actif

HEATH POINTE

SITE DE TÉLÉCOMMUNICATIONS - TELECOMMUNICATIONS SITE

Drawing - Dessin

ABRI GROUPES ÉLECTROGÈNES - OUVERTURES MURALES / SHELTER FOR GENERATORS SETS WALL OPENINGS

designed - conception: J. DE MONTIGNY — date: 2018-12-19
drawn - dessiné: GDT — date:
checked - vérifié: J. DE MONTIGNY — date:
approved - approuvé: J. DE MONTIGNY — date:

CCG ref. no. - no. réf. GCC: DMYA8055-855
scale - échelle: 1:25
drawing no. - no. dessin: QE85500-B201
sheet feuille: N-04
rev-rév: 0

A1

QE85500-B201

File / Fichier: QE85500-B201.DWG - Printed / Imprimé: 2019/05/16 2:36

CAD PRODUCED DRAWING
PRODUIT PAR DAO

REPORT ANY ERRORS OR OMISSIONS TO ILS MANAGER
SIGNALER LES ERREURS OU LES OMISSIONS AU GESTIONNAIRE SLI

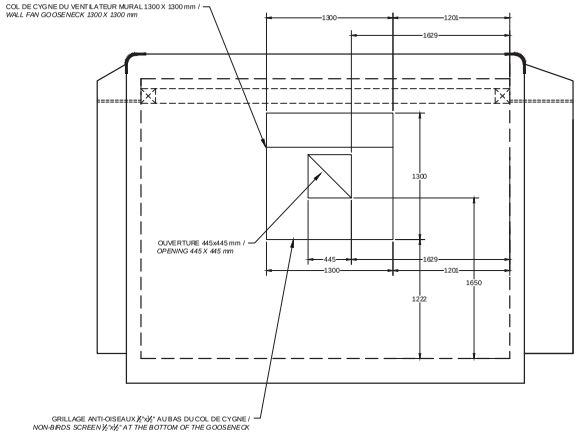

1 PROFIL GAUCHE / LEFT PROFILE

ÉCHELLE / SCALE : 1:25

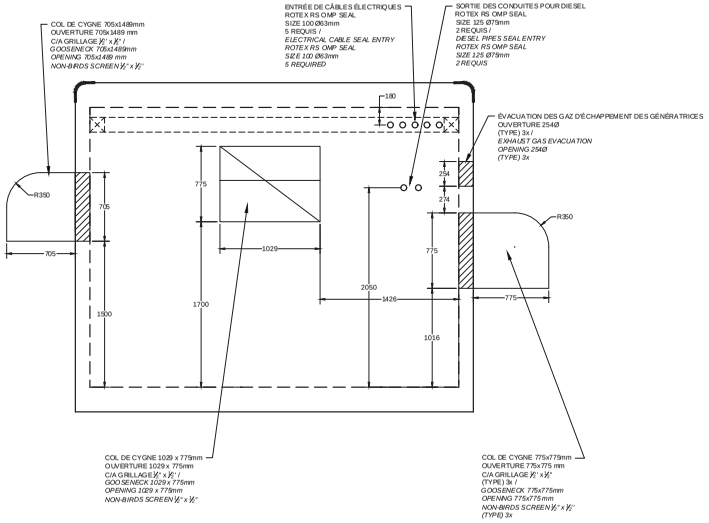

2 PROFIL DROIT / RIGHT PROFILE

ÉCHELLE / SCALE : 1:25

Fisheries and Oceans Canada / Pêches et Océans Canada
Canadian Coast Guard / Garde côtière Canadienne

Vendor Information / Sous-traitant

rev	description	by par	date
0	POUR SOUMISSION	JDM	2019-04

Asset - Actif

HEATH POINTE

SITE DE TÉLÉCOMMUNICATIONS - TELECOMMUNICATIONS SITE

Drawing - Dessin

ABRI GROUPES ÉLECTROGÈNES - OUVERTURES MURALES / SHELTER FOR GENERATORS SETS WALL OPENINGS

designed - conception: J. DE MONTIGNY — date: 2018-12-19
drawn - dessiné: GDT — date:
checked - vérifié: - — date:
approved - approuvé: - — date:

CCG ref. no. - no. réf. GCC: DMYA8055-855 — scale - échelle: 1:25
drawing no. - no. dessin: QE85500-B201 — sheet feuille: O-05 — rev-rév: 0

A1

QE85500-B201

File / Fichier: QE85500-B201.DWG - Printed / Imprimé: 2019/05/16 2:36

millimeters / millimètres

CAD PRODUCED DRAWING
PRODUIT PAR DAO

REPORT ANY ERRORS OR OMISSIONS TO ILS MANAGER
SIGNALER LES ERREURS OU LES OMISSIONS AU GESTIONNAIRE SLI

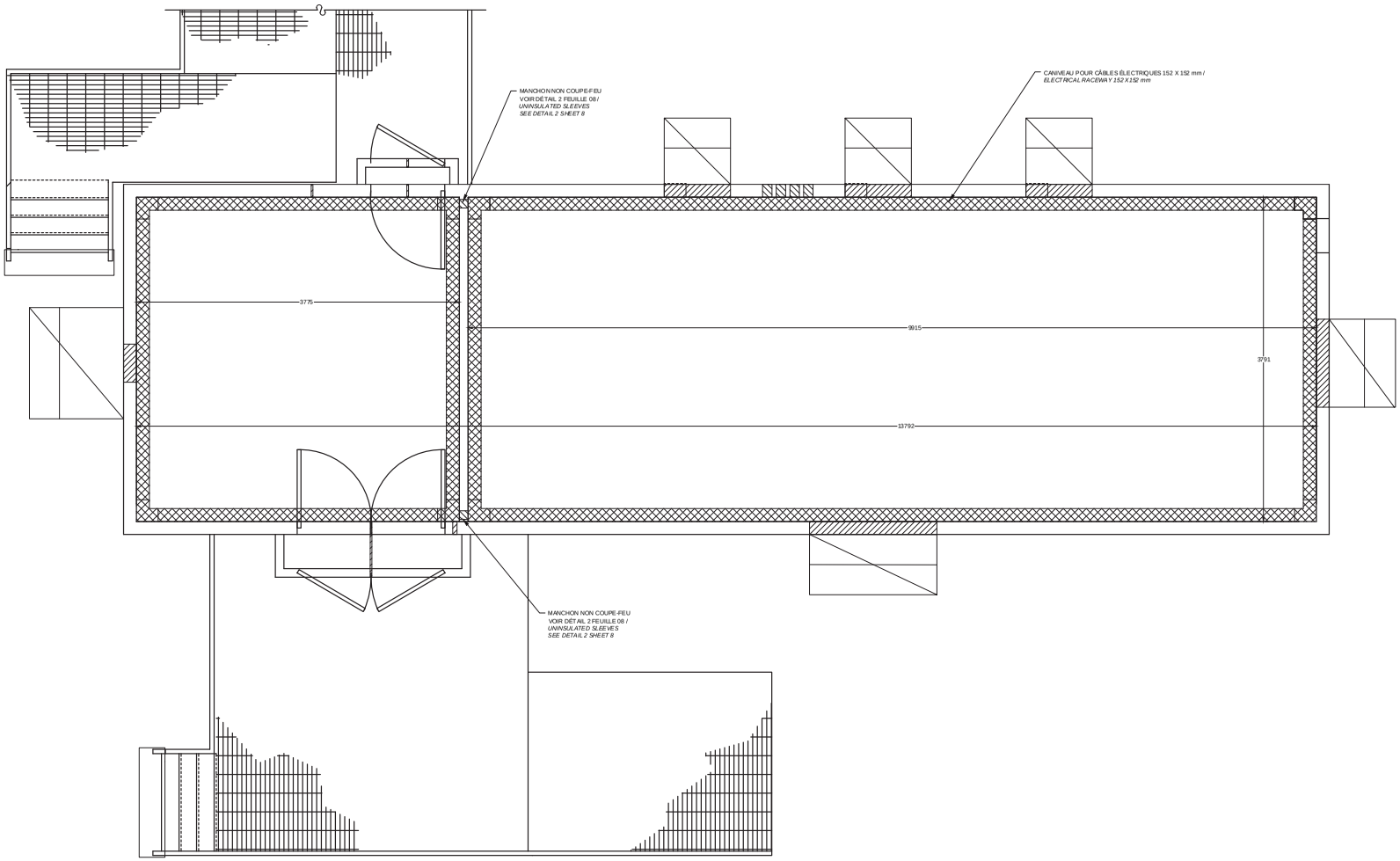

1 VUE EN PLAN / PLAN VIEW

ÉCHELLE / SCALE : 1:25

Fisheries and Oceans Canada / Pêches et Océans Canada
Canadian Coast Guard / Garde côtière Canadienne

Vendor Information / Sous-traitant

rev	description	by par	date
0	POUR SOUMISSION	JDM	2019-04

Asset - Actif

HEATH POINTE

SITE DE TÉLÉCOMMUNICATIONS - TELECOMMUNICATIONS SITE

Drawing - Dessin

ABRI GROUPES ÉLECTROGÈNES - CANIVEAUX ÉLECTRIQUES / SHELTER FOR GENERATORS SETS ELECTRICAL RACEWAY

designed - conception: J. DE MONTIGNY — date: 2018-12-19
drawn - dessiné: GDT — date:
checked - vérifié: J. DE MONTIGNY — date:
approved - approuvé: J. DE MONTIGNY — date:

CCG ref. no. - no. réf. GCC: DMYA8055-855
scale - échelle: 1:25
drawing no. - no. dessin: QE85500-B201
sheet-feuille: P-06
rev-rév: 0

A1

QE85500-B201

File / Fichier: QE85500-B201.DWG - Printed / Imprimé: 2019/05/16 2:36

CAD PRODUCED DRAWING
PRODUIT PAR DAO

REPORT ANY ERRORS OR OMISSIONS TO ILS MANAGER
SIGNALER LES ERREURS OU LES OMISSIONS AU GESTIONNAIRE SLI

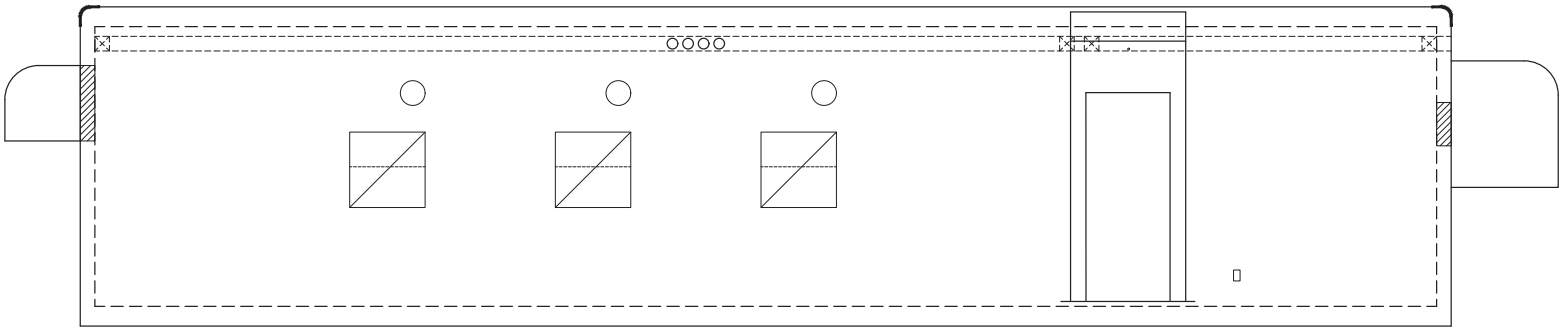

1 VUE ÉLÉVATION ARRIÈRE / REAR ELEVATION

ÉCHELLE / SCALE : 1:25

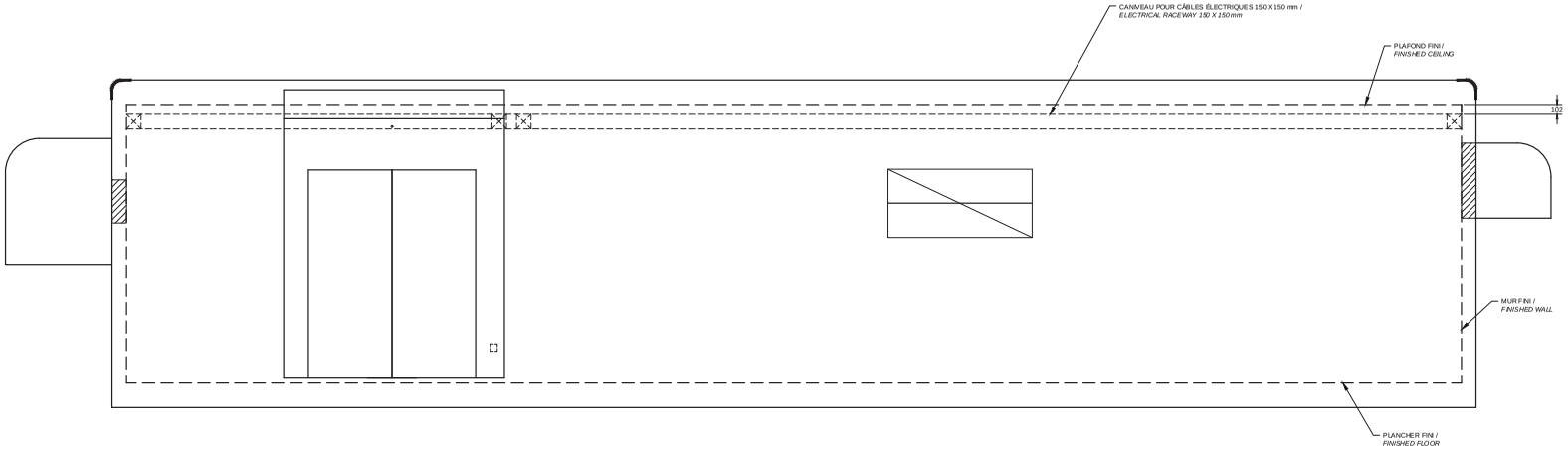

2 VUE ÉLÉVATION AVANT / FRONT ELEVATION VIEW

ÉCHELLE / SCALE : 1:25

Fisheries and Oceans Canada / Pêches et Océans Canada
Canadian Coast Guard / Garde côtière Canadienne

Vendor Information / Sous-traitant

rev	description	by par	date
0	POUR SOUMISSION	JDM	2019-04

Asset - Actif

HEATH POINTE

SITE DE TÉLÉCOMMUNICATIONS - TELECOMMUNICATIONS SITE

Drawing - Dessin

ABRI GROUPES ÉLECTROGÈNES - CANIVEAUX / SHELTER FOR GENERATORS SETS RACEWAY

designed - conception: J. DE MONTIGNY — date: 2018-12-19
drawn - dessiné: GDT — date:
checked - vérifié: J. DE MONTIGNY — date:
approved - approuvé: J. DE MONTIGNY — date:

CCG ref. no. - no. réf. GCC: DMYA8055-855
scale - échelle: 1:25
drawing no. - no. dessin: QE85500-B201
sheet-feuille: Q-07
rev-rév: 0

A1

QE85500-B201

File / Fichier: QE85500-B201.DWG - Printed / Imprimé: 2019/05/16 2:36

QE85500-B201

CAD PRODUCED DRAWING
PRODUIT PAR DAO

REPORT ANY ERRORS OR OMISSIONS TO ILS MANAGER
SIGNALER LES ERREURS OU LES OMISSIONS AU GESTIONNAIRE SLI

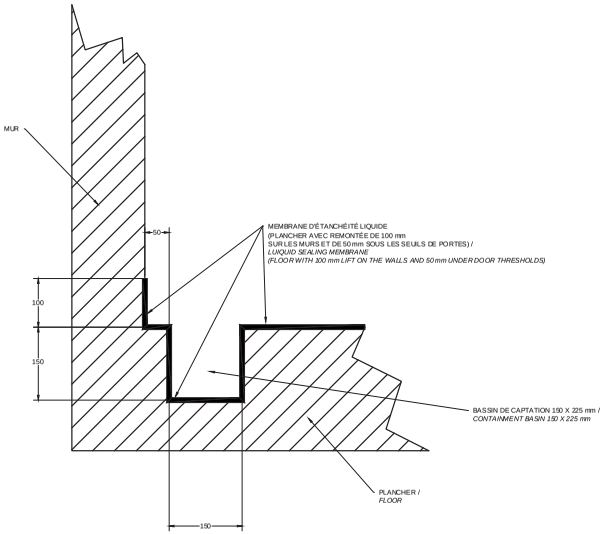

1 DÉTAIL / DETAIL
ÉCHELLE / SCALE : 1:5

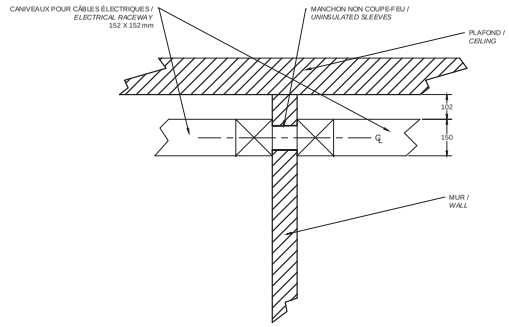

2 DÉTAIL - VUE EN ÉLÉVATION / ELEVATION VIEW
ÉCHELLE / SCALE : 1:10

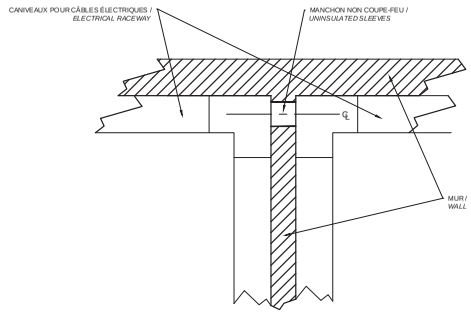

3 DÉTAIL - VUE EN PLAN / DETAIL - PLAN VIEW
ÉCHELLE / SCALE : 1:10

Fisheries and Oceans Canada / Pêches et Océans Canada
Canadian Coast Guard / Garde côtière Canadienne

Vendor Information / Sous-traitant

rev	description	by par	date
0	POUR SOUMISSION	JDM	2019-04

Asset - Actif

HEATH POINTE

SITE DE TÉLÉCOMMUNICATIONS - TELECOMMUNICATIONS SITE

Drawing - Dessin

ABRI GROUPES ÉLECTROGÈNES - DÉTAILS / SHELTER FOR GENERATORS SETS - DETAILS

designed - conception: J. DE MONTIGNY — date: 2018-12-19
drawn - dessiné: GDT — date:
checked - vérifié: J. DE MONTIGNY — date:
approved - approuvé: J. DE MONTIGNY — date:

CCG ref. no. - no. réf. GCC: DMYA8055-855
scale - échelle: 1:25
drawing no. - no. dessin: QE85500-B201
sheet-feuille: R-08
rev-rév: 0

A1

QE85500-B201

File / Fichier: QE85500-B201.DWG - Printed / Imprimé: 2019/05/16 2:36

CAD PRODUCED DRAWING
PRODUIT PAR DAO

REPORT ANY ERRORS OR OMISSIONS TO ILS MANAGER
SIGNALER LES ERREURS OU LES OMISSIONS AU GESTIONNAIRE SLI

PLAQUE D'ENCRAGE EN ACIER TYPE ENTRE LES GROUPES ÉLECTROGÈNES ET LE PLANCHER DE L'ABRI
/ INTERFACE PLATE FOR GENERATOR SETS.

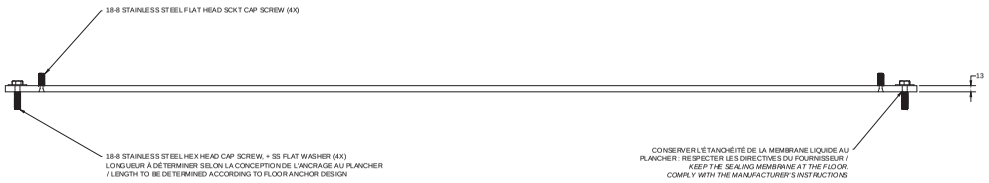

NOTE :
LA CONFIGURATION DES QUATRE (4) PLAQUES POURRAIT CHANGER SELON
LE MODÈLE DES GÉNÉRATRICES RETENU PAR LA GCC /
THE FOUR (4) PLATES SET UP COULD BE CHANGED BY THE CCG
GENERATORS SETS CHOICE

Fisheries and Oceans Canada / Pêches et Océans Canada
Canadian Coast Guard / Garde côtière Canadienne

Vendor Information / Sous-traitant

rev	description	by par	date
0	POUR SOUMISSION	JDM	2019-04

Asset - Actif

HEATH POINTE

SITE DE TÉLÉCOMMUNICATIONS - TELECOMMUNICATIONS SITE

Drawing - Dessin

ABRI GROUPES ÉLECTROGÈNES - PLAQUE D'ENCRAGE EN ACIER / SHELTER FOR GENERATORS SETS STEEL INTERFACE PLATE

designed - conception: J. DE MONTIGNY — date: 2018-12-19
drawn - dessiné: GDT — date:
checked - vérifié: J. DE MONTIGNY — date:
approved - approuvé: J. DE MONTIGNY — date:

CCG ref. no. - no. réf. GCC: DMYA8055-855
scale - échelle: 1:5
drawing no. - no. dessin: QE85500-B201
sheet feuille: S-09
rev-rév: 0

A1

QE85500-B201

File / Fichier: QE85500-B201.DWG - Printed / Imprimé: 2019/05/16 2:36

CAD PRODUCED DRAWING
PRODUIT PAR DAO

REPORT ANY ERRORS OR OMISSIONS TO ILS MANAGER
SIGNALER LES ERREURS OU LES OMISSIONS AU GESTIONNAIRE SLI

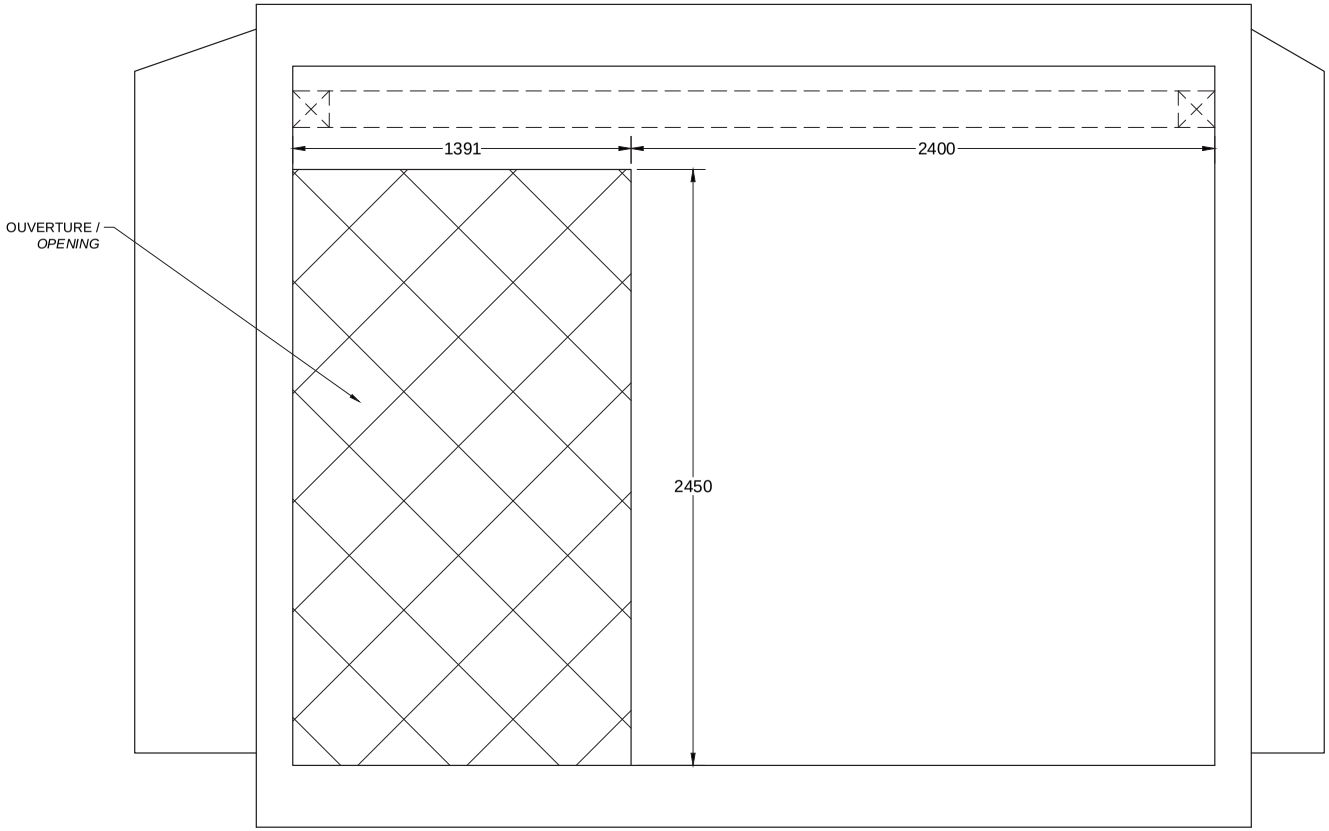

A
10 01
COUPE - SECTION

Fisheries and Oceans Canada / Pêches et Océans Canada
Canadian Coast Guard / Garde côtière Canadienne

Vendor Information / Sous-traitant

rev	description	by par	date
0	POUR SOUMISSION	JDM	2019-04

Asset - Actif

HEATH POINTE

SITE DE TÉLÉCOMMUNICATIONS - TELECOMMUNICATIONS SITE

Drawing - Dessin

ABRI GROUPES ÉLECTROGÈNES - MUR SÉPARATEUR / SHELTER FOR GENERATORS SETS SEPARATION

designed - conception: J. DE MONTIGNY — date: 2018-12-19
drawn - dessiné: GDT — date: -
checked - vérifié: - — date: -
approved - approuvé: - — date: -

CCG ref. no. - no. réf. GCC: DMYA8055-855
scale - échelle: 1:25
drawing no. - no. dessin: QE85500-B201
sheet-feuille: T-10
rev-rév: 0

QE85500-B201

File / Fichier: QE85500-B201.DWG - Printed / Imprimé: 2019/05/16 2:37

A1

QE85500-B201

CAD PRODUCED DRAWING
PRODUIT PAR DAO

REPORT ANY ERRORS OR OMISSIONS TO ILS MANAGER
SIGNALER LES ERREURS OU LES OMISSIONS AU GESTIONNAIRE SLI

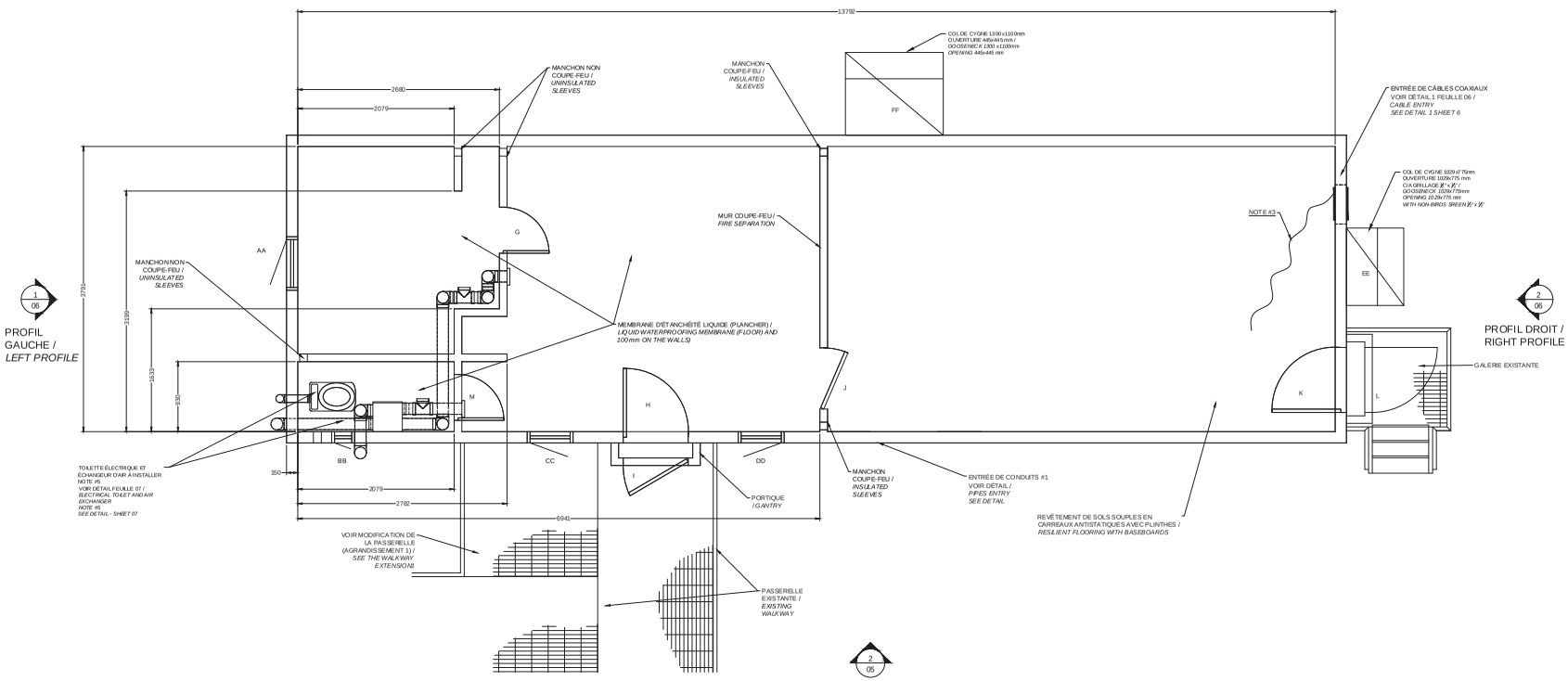

NOTES GÉNÉRALES APPLICABLES AUX DEUX ABRIS:

1. AJUSTER LES DIMENSIONS DES OUVERTURES SELON LES STANDARDS DE PORTES ET FENÊTRES CHOISIES.
2. S'ASSURER D'UNE HAUTEUR LIBRE MINIMALE À L'INTÉRIEUR DES DEUX ABRIS DE 2875 mm À PARTIR DU REVÊTEMENT DU PLANCHER JUSQU'AU FINI DU PLAFOND.
3. CÂBLE PLÂT EN CUIVRE 0.004" X 2" X 10.5' #A811A26F50 DE ERICO OU #1181-2X18 DE 3 m INSTALLÉ ET COLLÉ SOUS LES TUILES ANTISTATIQUES. LE CÂBLE PLÂT DEVRA ÊTRE RELIÉ À LA PLAQUE DE MALT VIA UN CÂBLE #6 VERT. LE RACCORDEMENT DU CÂBLE VERT #6 AU CÂBLE PLAT DEVRA ÊTRE FAIT VIA UN TERMINAL #LCCX6-38D-6 DE PANDUIT. VALIDER LA POSITION DU CÂBLE AVEC LE REPRÉSENTANT DE LA GCC AVANT DE L'INSTALLER (SECTION ÉQUIPEMENTS ÉLECTRONIQUES).
4. LORS DE LA CONCEPTION DES ABRIS, VALIDER LES DIMENSIONS ET LES POSITIONS DE TOUTES LES OUVERTURES DONT CELLES POUR LA VENTILLATION. TOUTES LES COTES INDIQUÉES AUX PLAN SONT À TITRE INDICATIF À L'EXEPTION DE LA HAUTEUR LIBRE (2875 mm) ET LES DIMENSIONS INTÉRIEURES DES PIÈCES.
5. LA GCC FOURNIRA LES SPÉCIFICATIONS TECHNIQUES DE LA TOILETTE ÉLECTRIQUE ET DE L'ÉCHANGEUR D'AIR DÉJÀ ACHETÉS POUR PERMETTRE LEUR INSTALLATION DANS LE PRÉSENT CONTRAT (SECTION SURVIE) - VOIR ANNEXE AU DEVIS. CECI EXCLUT LE RACCORDEMENT ÉLECTRIQUE.
6. MANCHONS ISOLÉS DE TYPE FIRESTOP - READY SLEEVE - MODÈLE FS401.
7. LES NOUVEAUX PORTIQUES DOIVENT S'INSÉRER SUR LES PASSERELLES ET LES GALERIES SANS CONFLIT AVEC LES GARDE-CORPS ET ESCALIERS.

GENERALE NOTES FOR THE TWO SHELTERS:

1. *ADJUSTING THE OPENING SIZES ACCORDING TO THE STANDARD OF DOORS AND WINDOWS CHOSEN.*
2. *ENSURE A MINIMUM CLEARANCE INSIDE OF THE TWO SHELTERS OF 2875mm BETWEEN THE FINISHED CEILING AND FLOOR.*
3. *FLAT COPPER CABLE 0.004" X 2" X 10.5' #A811A26F50FROM ERICO OR 1181-2 X 18 X 3m INSTALLED AND GLUED UNDER THE ANTISTATIC TILES. VERIFY THE CABLE LOCATION WITH THE REPRESENTATION OF THE CCG BEFORE THE INSTALLATION (ELECTRONIC EQUIPMENTS SECTION).*
4. *DURING THE DESIGN OF SHELTERS, VALIDATE THE SIZES AND LOCATION OF ALL OPENINGS INCLUDING THOSE FOR VENTILLATION. ALL IS INDICATIVE ON DRAWINGS EXCEPTED FOR THE CLEARANCE (2875 mm) AND THE INNER DIMENSIONS OF EACH ROOM.*
5. *THE CCG WILL PROVIDE THE TECHNICAL SPECIFICATION FOR THE ELECTRIC TOILET AND AIR EXCHANGER BOUGHT TO EXPLAIN THEIR INSTALLATION IN THIS CONTRACT. (SURVIVAL SECTION). SEE ANNEX IN SPECIFICATIONS. EXCLUDED THE ELECTRICAL CONNECTION.*
6. *INSULATED SLEEVES FIRESTOP TYPE - READY SLEEVE - FS401 MODEL.*
7. *THE NEW GANTRIES MUST BE INSERTED ON THE WALKWAY OR ON THE GALLERY WITHOUT CONFLICT WITH GUARDRAILS AND STAIRS.*

DIMENSIONS DES COLS DE CYGNE, PORTES ET FENÊTRES / GOOSENECKS, DOORS AND WINDOWS SIZES

IDENTIFICATION	DIMENSIONS mm	OUVERTURES NETTES mm / OPENING mm	GRILLAGE ANTI-OISEAU 1/4" X 1/4"
AA	711 X 813		AVEC MOUSTIQUAIRE / WITH SCREEN
BB	305 X 610		AVEC MOUSTIQUAIRE / WITH SCREEN
CC	610 X 914		AVEC MOUSTIQUAIRE / WITH SCREEN
DD	610 X 914		AVEC MOUSTIQUAIRE / WITH SCREEN
EE	775H X 1029L X 775P	1029 X 775	OUI / YES
FF	1300H X 1300L X 1100P	445 X 445	OUI / YES
G	2134 X 711		
H	2134 X 914		
I	2134 X 914	AJUSTER LE GARDE DE LA PASSERELLE	
J	2134 X 914		
K	2134 X 914		
L	2134 X 914		
M	2134 X 610		

Fisheries and Oceans Canada / Pêches et Océans Canada
Canadian Coast Guard / Garde côtière Canadienne

Vendor Information / Sous-traitant

rev	description	by par	date
0	POUR SOUMISSION	JDM	2019-04

Asset - Actif

HEATH POINTE

SITE DE TÉLÉCOMMUNICATIONS - TELECOMUNICATIONS SITE

Drawing Title

ABRI DE SURVIE & ÉQUIPEMENTS ÉLECTRONIQUES - VUE D'ENSEMBLE / SURVIVAL & ELECTRONIC EQUIPMENT SHELTER OVERVIEW

designed - conception: P. DAGENAIS — date: 2018-12-12
drawn - dessiné: GDT — date:
checked - vérifié: J. DE MONTIGNY — date:
approved - approuvé: J. DE MONTIGNY — date:
CCG ref. no. - no. réf. GCC: DMYA8055-855 — scale - échelle: 1:30
drawing no. - no. dessin: QE85500-B301 — sheet feuille: C-01 — rev-rév: 0

A1

QE85500-B301

File / Fichier: QE85500-B301.DWG - Printed / Imprimé: 2019/05/16 2:33

CAD PRODUCED DRAWING
PRODUIT PAR DAO

REPORT ANY ERRORS OR OMISSIONS TO ILS MANAGER
SIGNALER LES ERREURS OU LES OMISSIONS AU GESTIONNAIRE SLI

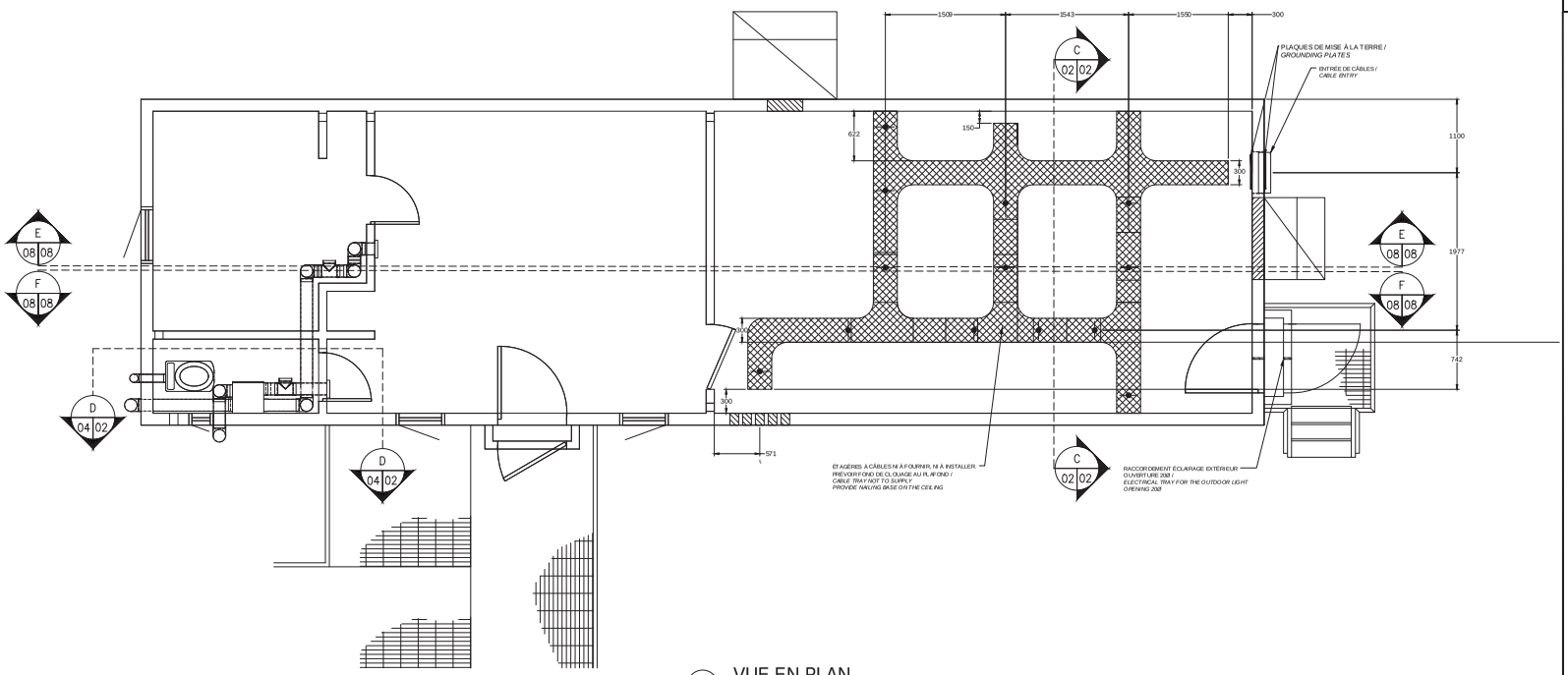

1 VUE EN PLAN
Scale: 1:30

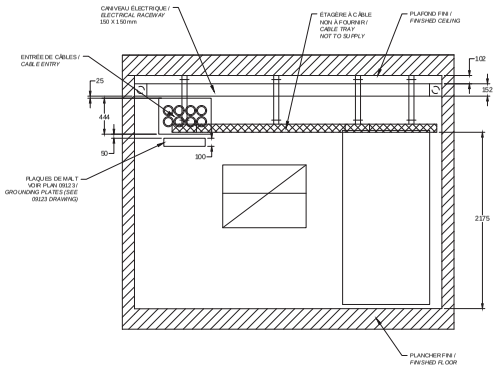

C 02 02 COUPE - SECTION

Fisheries and Oceans Canada / Pêches et Océans Canada
Canadian Coast Guard / Garde côtière Canadienne

Vendor Information / Sous-traitant

rev	description	by par	date
0	POUR SOUMISSION	JDM	2019-04

Asset - Actif

HEATH POINTE

SITE DE TÉLÉCOMMUNICATIONS - TELECOMUNICATIONS SITE

Drawing - Dessin

ABRI DE SURVIE & ÉQUIPEMENTS ÉLECTRONIQUES - ÉTAGÈRE A CÂBLES / SURVIVAL & ELECTRONIC EQUIPMENT SHELTER - CABLE TRAY

designed - conception	J. DE MONTIGNY	date 2018-12-19
drawn - dessiné	GDT	date
checked - vérifié	J. DE MONTIGNY	date
approved - approuvé	J. DE MONTIGNY	date
CCG ref. no. - no. réf. GCC	DMYA8055-855	scale - échelle 1:30
drawing no. - no. dessin	QE85500-B301	sheet-feuille D-02 / rev-rév 0

QE85500-B301

File / Fichier: QE85500-B301.DWG - Printed / Imprimé: 2019/05/16 2:33

A1

millimeters / millimètres

CAD PRODUCED DRAWING
PRODUIT PAR DAO

REPORT ANY ERRORS OR OMISSIONS TO ILS MANAGER
SIGNALER LES ERREURS OU LES OMISSIONS AU GESTIONNAIRE SLI

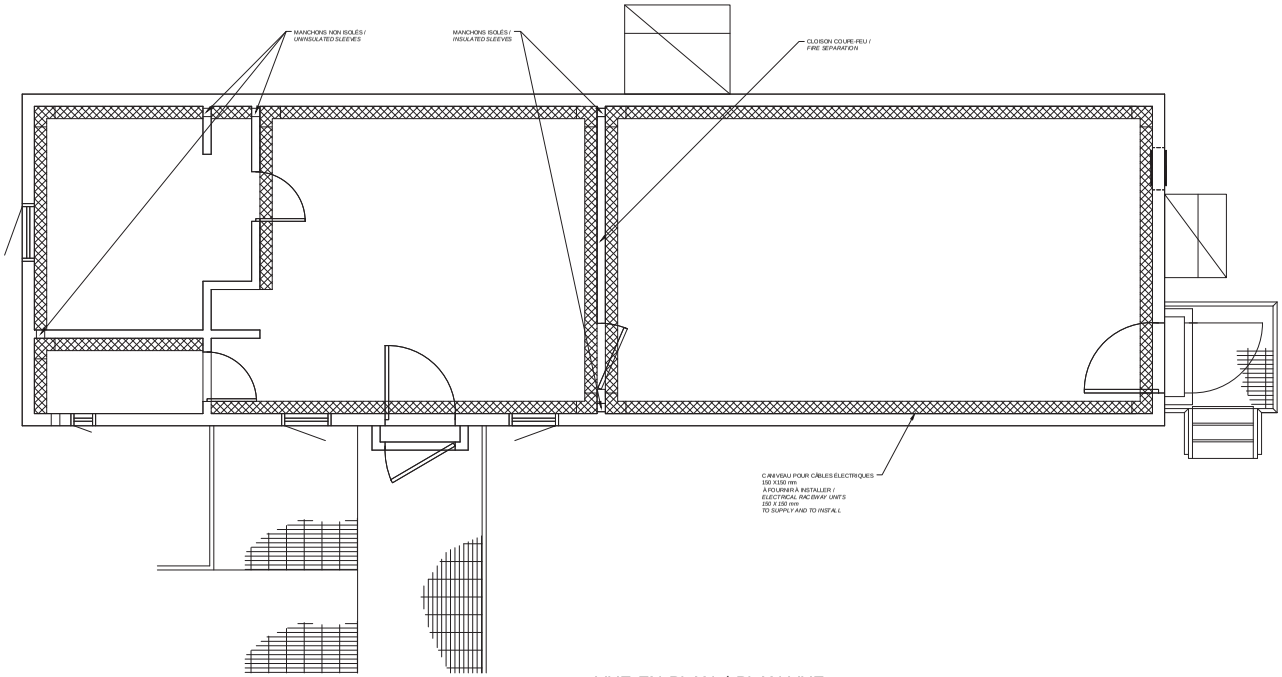

1 VUE EN PLAN / PLAN VUE

ÉCHELLE / SCALE: 1:30

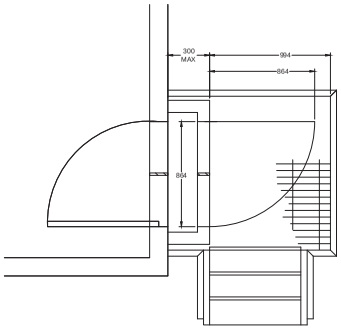

2 DÉTAIL - VALIDATION DU PORTIQUE ET DE LA PORTE PAR RAPPORT À LA GALERIE / DETAIL - VALIDATION OF THE GANTRY VERSUS GALLERY

ÉCHELLE / SCALE: 1:20

Fisheries and Oceans Canada / Pêches et Océans Canada
Canadian Coast Guard / Garde côtière Canadienne

Vendor Information / Sous-traitant

rev	description	by par	date
0	POUR SOUMISSION	JDM	2019-04

Asset - Actif

HEATH POINTE

SITE DE TÉLÉCOMMUNICATIONS - TELECOMUNICATIONS SITE

Drawing - Dessin

ABRI DE SURVIE & ÉQUIPEMENTS ÉLECTRONIQUES - CANIVEAU ÉLECTRIQUE / SURVIVAL & ELECTRONIC EQUIPMENT SHELTER - ELECTRICAL RACEWAY UNITS

designed - conception	date
J. DE MONTIGNY	2018-12-19
drawn - dessiné	date
GDT	
checked - vérifié	date
J. DE MONTIGNY	
approved - approuvé	date
J. DE MONTIGNY	
CCG ref. no. - no. réf. GCC	scale - échelle
DMYA8055-855	1:30
drawing no. - no. dessin	sheet-feuille / rev-rév
QE85500-B301	E-03 / 0

A1

QE85500-B301

File / Fichier: QE85500-B301.DWG - Printed / Imprimé: 2019/05/16 2:33

millimeters / millimètres

CAD PRODUCED DRAWING
PRODUIT PAR DAO

REPORT ANY ERRORS OR OMISSIONS TO ILS MANAGER
SIGNALER LES ERREURS OU LES OMISSIONS AU GESTIONNAIRE SLI

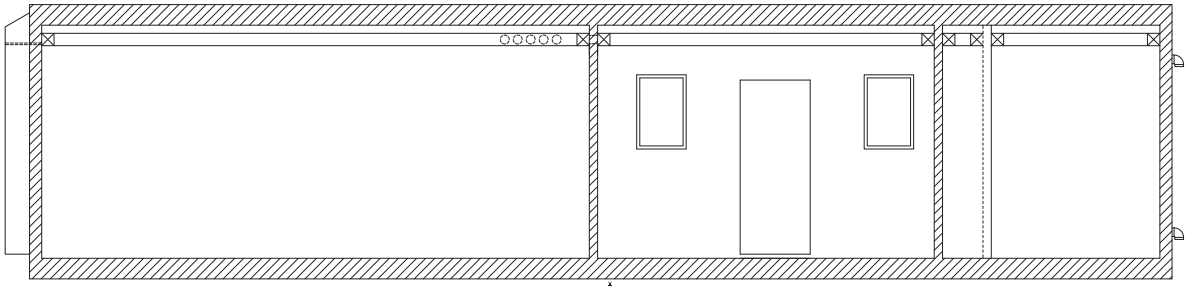

E 08 08 COUPE - SECTION

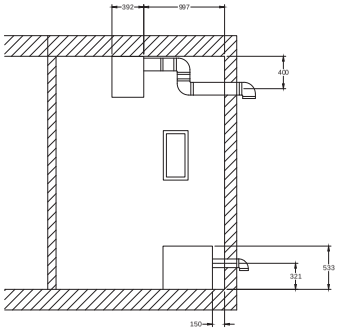

D 04 02 COUPE - SECTION

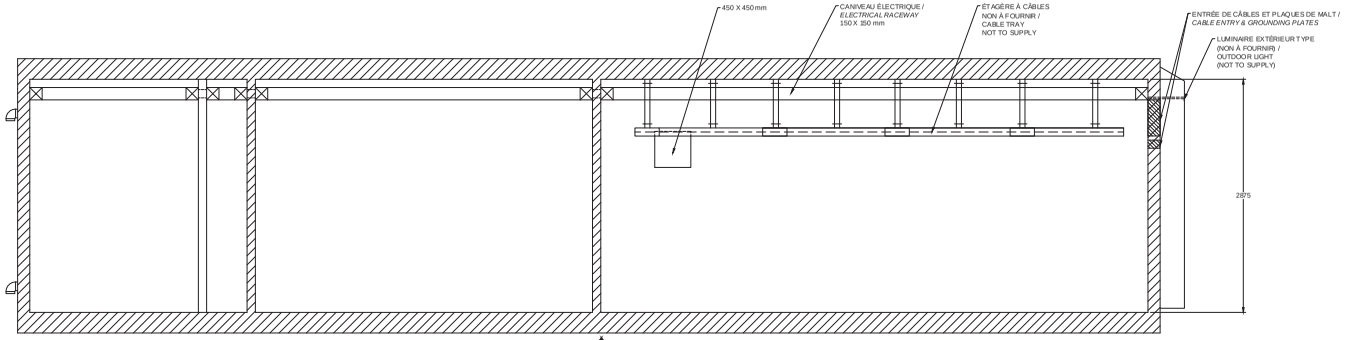

F 08 08 COUPE - SECTION

Fisheries and Oceans Canada / Pêches et Océans Canada
Canadian Coast Guard / Garde côtière Canadienne

Vendor Information / Sous-traitant

rev	description	by par	date
0	POUR SOUMISSION	JDM	2019-04

Asset - Actif

HEATH POINTE

SITE DE TÉLÉCOMMUNICATIONS - TELECOMUNICATIONS SITE

Drawing - Dessin

ABRI DE SURVIE & ÉQUIPEMENTS ÉLECTRONIQUES - COUPES D-D, E-E, F-F / SURVIVAL & ELECTRONIC EQUIPMENT SHELTER SECTIONS D-D, E-E, F-F

designed - conception: J. DE MONTIGNY — date: 2018-12-19
drawn - dessiné: GDT — date:
checked - vérifié: J. DE MONTIGNY — date:
approved - approuvé: J. DE MONTIGNY — date:

CCG ref. no. - no. réf. GCC: DMYA8055-855
scale - échelle: 1:30
drawing no. - no. dessin: QE85500-B301
sheet-feuille: F-04
rev-rév: 0

A1

QE85500-B301

File / Fichier: QE85500-B301.DWG - Printed / Imprimé: 2019/05/16 2:33

CAD PRODUCED DRAWING
PRODUIT PAR DAO

REPORT ANY ERRORS OR OMISSIONS TO ILS MANAGER
SIGNALER LES ERREURS OU LES OMISSIONS AU GESTIONNAIRE SLI

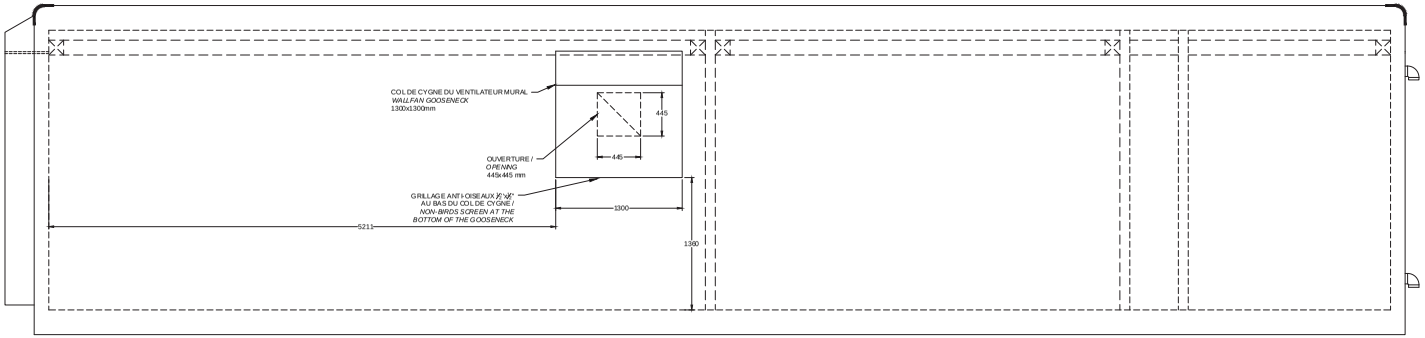

1 VUE ÉLÉVATION ARRIÈRE / REAR ELEVATION VIEW

ÉCHELLE / SCALE : 1:25

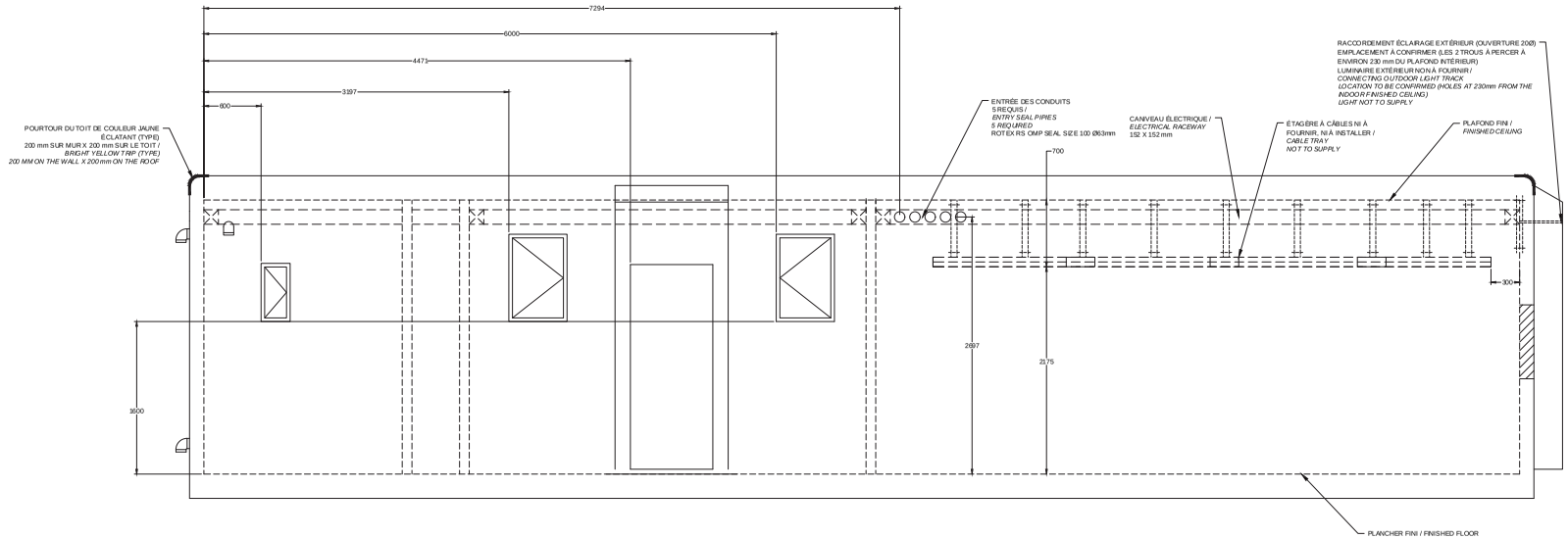

2 VUE ÉLÉVATION AVANT / FRONT ELEVATION VIEW

ÉCHELLE / SCALE : 1:25

Fisheries and Oceans Canada / Pêches et Océans Canada
Canadian Coast Guard / Garde côtière Canadienne

Vendor Information / Sous-traitant

rev	description	by par	date
0	POUR SOUMISSION	JDM	2019-04

Asset - Actif

HEATH POINTE

SITE DE TÉLÉCOMMUNICATIONS - TELECOMUNICATIONS SITE

Drawing - Dessin

ABRI DE SURVIE & ÉQUIPEMENTS ÉLECTRONIQUES - OUVERTURES MURALES / SURVIVAL & ELECTRONIC EQUIPMENT SHELTER WALL OPENINGS

designed - conception	date
J. DE MONTIGNY	2018-12-19
drawn - dessiné	date
GDT	
checked - vérifié	date
J. DE MONTIGNY	
approved - approuvé	date
J. DE MONTIGNY	
CCG ref. no. - no. réf. GCC	scale - échelle
DMYA8055-855	1:25
drawing no. - no. dessin	sheet-feuille / rev-rév
QE85500-B301	G-05 / 0

A1

QE85500-B301

File / Fichier: QE85500-B301.DWG - Printed / Imprimé: 2019/05/16 2:33

CAD PRODUCED DRAWING
PRODUIT PAR DAO

REPORT ANY ERRORS OR OMISSIONS TO ILS MANAGER
SIGNALER LES ERREURS OU LES OMISSIONS AU GESTIONNAIRE SLI

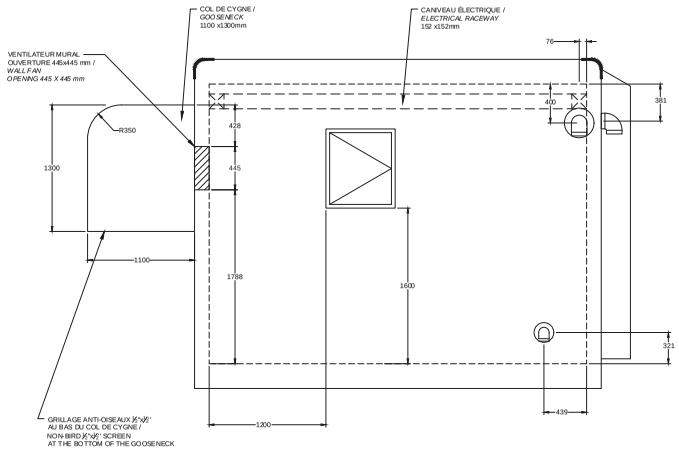

1 PROFIL GAUCHE / LEFT PROFILE

ÉCHELLE / SCALE : 1:25

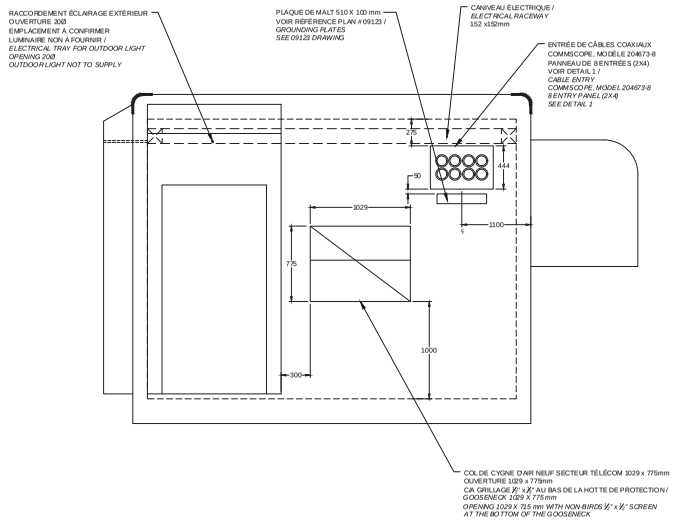

2 PROFIL DROIT / RIGHT PROFILE

ÉCHELLE / SCALE : 1:25

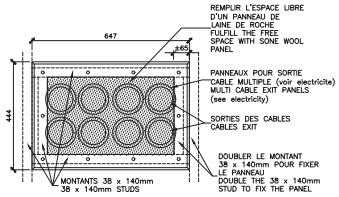

1 MULTI EXIT PANEL ELEVATION
06/06 ELEVATION PANNEAU MULTI–SORTIES

ECHELLE: 1=10 SCALE : 1=10

Fisheries and Oceans Canada / Pêches et Océans Canada
Canadian Coast Guard / Garde côtière Canadienne

Vendor Information / Sous-traitant

rev	description	by par	date
0	POUR SOUMISSION	JDM	2019-04

Asset - Actif

HEATH POINTE

SITE DE TÉLÉCOMMUNICATIONS - TELECOMUNICATIONS SITE

Drawing - Dessin

ABRI DE SURVIE & ÉQUIPEMENTS ÉLECTRONIQUES - OUVERTURES MURALES / SURVIVAL & ELECTRONIC EQUIPMENT SHELTER WALL OPENING

designed - conception: J. DE MONTIGNY — date: 2018-12-19
drawn - dessiné: GDT — date:
checked - vérifié: J. DE MONTIGNY — date:
approved - approuvé: J. DE MONTIGNY — date:

CCG ref. no. - no. réf. GCC: DMYA8055-855
scale - échelle: 1:25
drawing no. - no. dessin: QE85500-B301
sheet feuille: H-06
rev-rév: 0

A1

QE85500-B301

File / Fichier: QE85500-B301.DWG - Printed / Imprimé: 2019/05/16 2:33

CAD PRODUCED DRAWING
PRODUIT PAR DAO

REPORT ANY ERRORS OR OMISSIONS TO ILS MANAGER
SIGNALER LES ERREURS OU LES OMISSIONS AU GESTIONNAIRE SLI

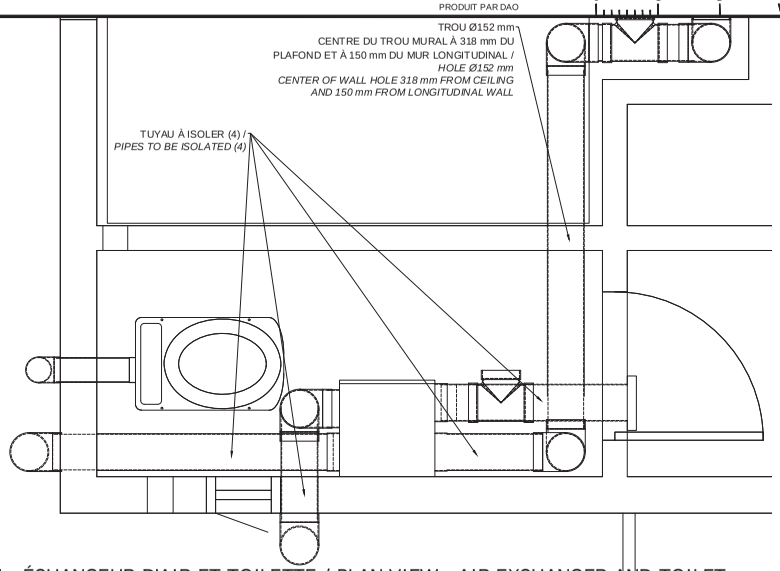

1 PLAN - ÉCHANGEUR D'AIR ET TOILETTE / PLAN VIEW - AIR EXCHANGER AND TOILET

ÉCHELLE / SCALE : 1:10

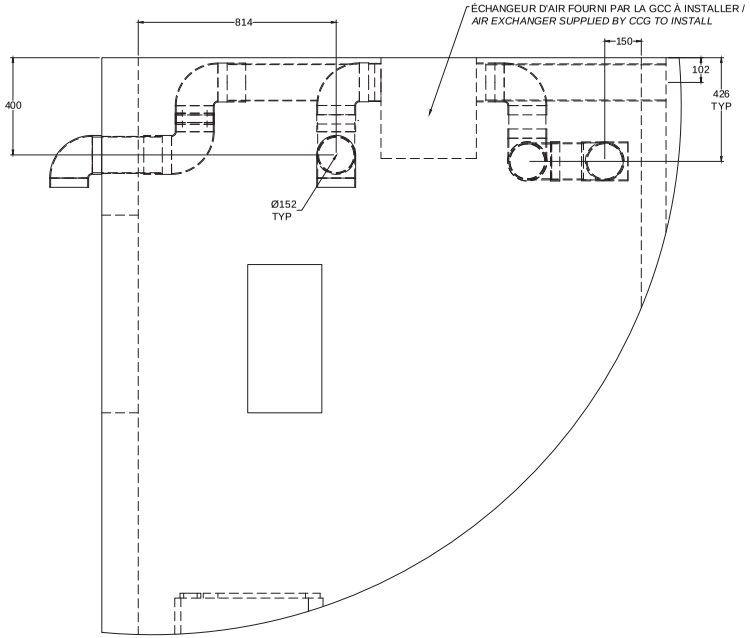

2 ÉLÉVATION - ÉCHANGEUR D'AIR / ELEVATION VIEW - AIR EXCHANGER

ÉCHELLE / SCALE : 1:10

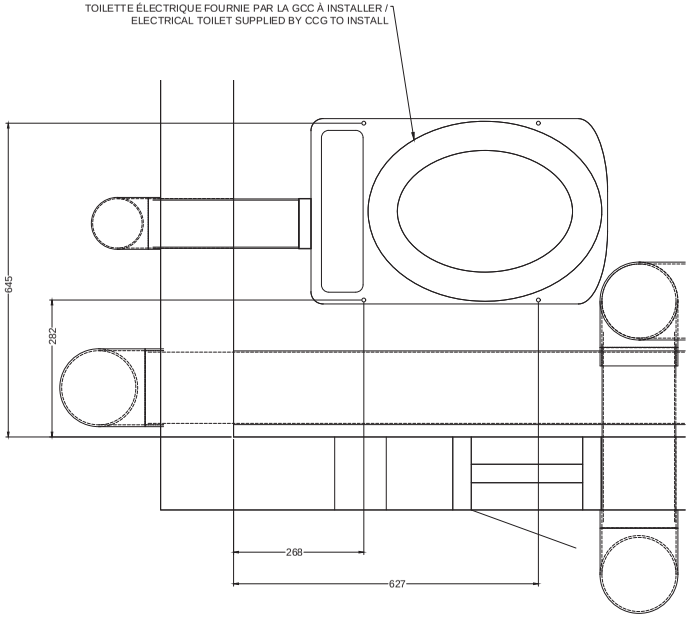

3 PLAN - FIXATION TOILETTE / PLAN VIEW - TOILET FASTENERS

ÉCHELLE / SCALE : 1:5

Fisheries and Oceans Canada / Pêches et Océans Canada
Canadian Coast Guard / Garde côtière Canadienne

Vendor Information / Sous-traitant

rev	description	by par	date
0	POUR SOUMISSION	JDM	2019-04

Asset - Actif

HEATH POINTE

SITE DE TÉLÉCOMMUNICATIONS - TELECOMUNICATIONS SITE

Drawing - Dessin

ABRI DE SURVIE & ÉQUIPEMENTS ÉLECTRONIQUES - TOILETTE ET ÉCHANGEUR D'AIR / SURVIVAL & ELECTRONIC EQUIPMENT SHELTER TOILET & AIR EXCHANGER

designed - conception: J. DE MONTIGNY — date: 2018-12-19
drawn - dessiné: GDT — date:
checked - vérifié: J. DE MONTIGNY — date:
approved - approuvé: J. DE MONTIGNY — date:

CCG ref. no. - no. réf. GCC: DMYA8055-855 — scale - échelle: 1:10
drawing no. - no. dessin: QE85500-B301 — sheet feuille: I-07 — rev-rév: 0

A1

QE85500-B301

File / Fichier: QE85500-B301.DWG - Printed / Imprimé: 2019/05/16 2:33

CAD PRODUCED DRAWING
PRODUIT PAR DAO

REPORT ANY ERRORS OR OMISSIONS TO ILS MANAGER
SIGNALER LES ERREURS OU LES OMISSIONS AU GESTIONNAIRE SLI

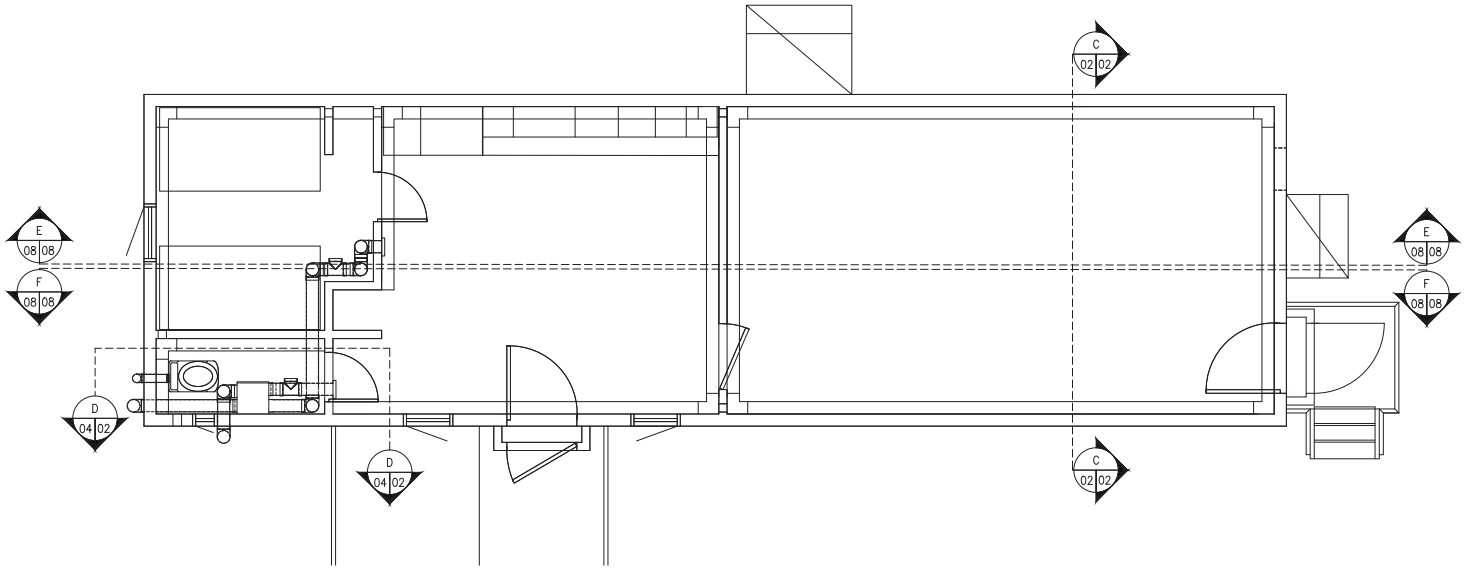

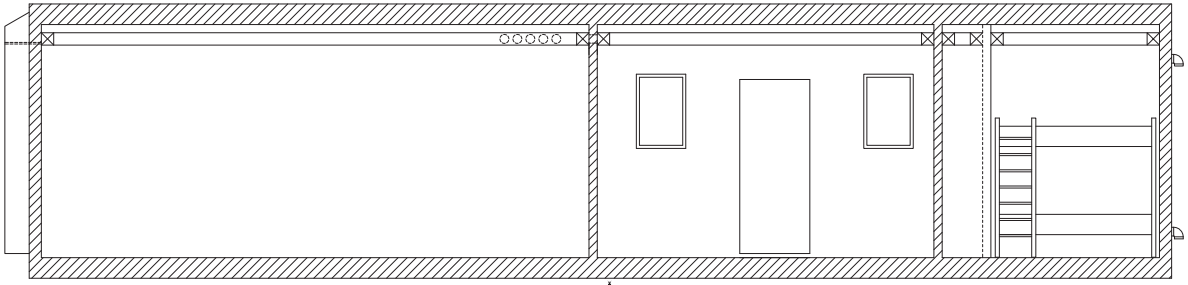

E 08 08 COUPE - SECTION

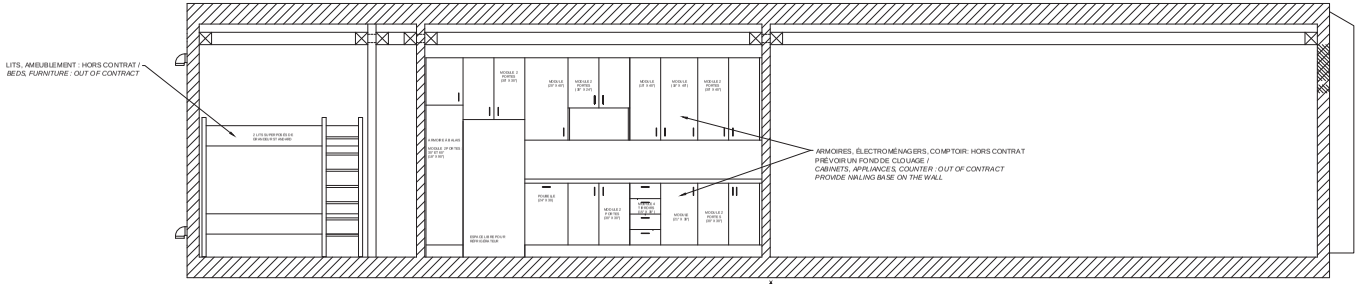

F 08 08 COUPE - SECTION

Fisheries and Oceans Canada / Pêches et Océans Canada
Canadian Coast Guard / Garde côtière Canadienne

Vendor Information / Sous-traitant

POUR INFORMATION SEULEMENT /
FOR INFORMATION ONLY

rev	description	by par	date
0	POUR SOUMISSION	JDM	2019-04

Asset - Actif

HEATH POINTE

SITE DE TÉLÉCOMMUNICATIONS - TELECOMUNICATIONS SITE

Drawing - Dessin

ABRI DE SURVIE & ÉQUIPEMENTS ÉLECTRONIQUES - MOBILIER / SURVIVAL & ELECTRONIC EQUIPMENT SHELTER FURNITURE

designed - conception: L. VANDAL — date: 2018-08-06
drawn - dessiné: GDT — date: 2018-08-06
checked - vérifié: L. VANDAL — date:
approved - approuvé: L. VANDAL — date:

CCG ref. no. - no. réf. GCC: DMYA8055-855
scale - échelle: 1:30
drawing no. - no. dessin: QE85500-B101-01
sheet-feuille: J-08
rev-rév: 0

A1

QE85500-B101-01

File / Fichier: QE85500-B101.DWG - Printed / Imprimé: 2019/05/16 2:34

millimeters / millimètres