TECHNICAL MANUAL

FOR

WFS1R-P (PSE)TYPE SEAL

IMPERIAL

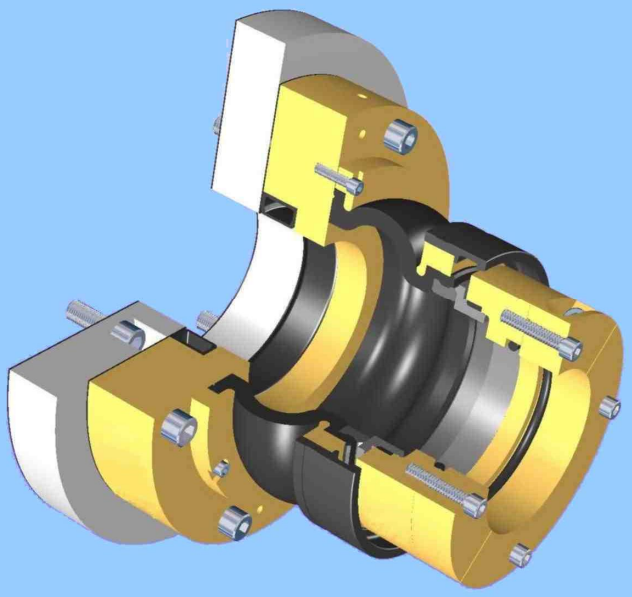

Enviroguard PSE Inboard Seal

for Water Lubrication Systems

Based on Tabulated G.A. Drawing:

H76214

CONTENTS

There are no shortcuts to safe working – always observe the following

Do's

- Wear personal protective equipment (PPE) such as hard hats, safety boots, ear defenders and high visibility clothing.
- Ensure the work area is clutter free and well lit.
- Check for obstructions and other slip or trip hazards (i.e. cables, spills).
- Inform others in the vicinity of your intention to work and estimated duration.
- Fill out any risk assessments or partake in any training pertinent to the site or job; prior to commencement.
- Observe any additional health and safety information relating to specific site hazards.
- Observe manual handling good practice.
- Read and observe safety data sheets requirements relating to chemical use.

Don'ts

- Take unnecessary risks
- Work alone, unless absolutely necessary.
- Ignore additional risks – i.e. welding, grinding or painting operations; all pose unique hazards to personnel not directly engaged in these activities.
- Use electrically powered tools in wet or damp conditions.
- Assume PPE and any safety equipment is fit for use – check first for correct operation and integrity, before using
- Work at height; unless harnessed/attached and have undertaken the appropriate training.
- Place fingers or hands where they may become pinched or trapped, manual intervention to be avoided during shaft movement or periods when shaft/seal could move.

1. INTRODUCTION.

1.1. The equipment described in this manual and the materials selected are the result of many years of research and experience in this field.

1.2. However, the care and attention paid during installation, testing, operations and maintenance, do to a large extent determine the long-term operational reliability of the equipment**.**

1.3. Whilst it is our policy to permit the installation and maintenance of this equipment to be carried out by 3rd parties (in accordance with the guidance contained within this Technical Manual) we would always recommend that one of our Service Engineers is present to oversee any installation or maintenance.

1.4. **When using this manual refer to the general arrangement drawing(s) in Section 15, which give the dimensions and data for the correct assembly and operation of the equipment.**

1.5. There is no automatic provision to up-date this manual. However, the supply of a complete new assembly will be accompanied by the latest revision/issue Manual and Drawing(s).

1.6. For further assistance please contact your local Wärtsilä office or go to www.wartsila.com .

2. DESCRIPTION OF THE EQUIPMENT.

2.1. Enviroguard PSE seals are high performance elastomer radial face type seals.

2.2. The PSE seal described in this Technical Manual is a Partially-split Inboard unit for use with Water lubrication systems in Fixed or Controllable Pitch Propeller applications.

2.3. The original supply non-split Silicon Carbide face and seat may be replaced with "split" spares during a seal overhaul without disturbance of the shaft and/or propeller.

2.4. Designed for high speed, operating in shallow or dirty waters, the PSE seal offers a robust, reliable, stern seal solution.

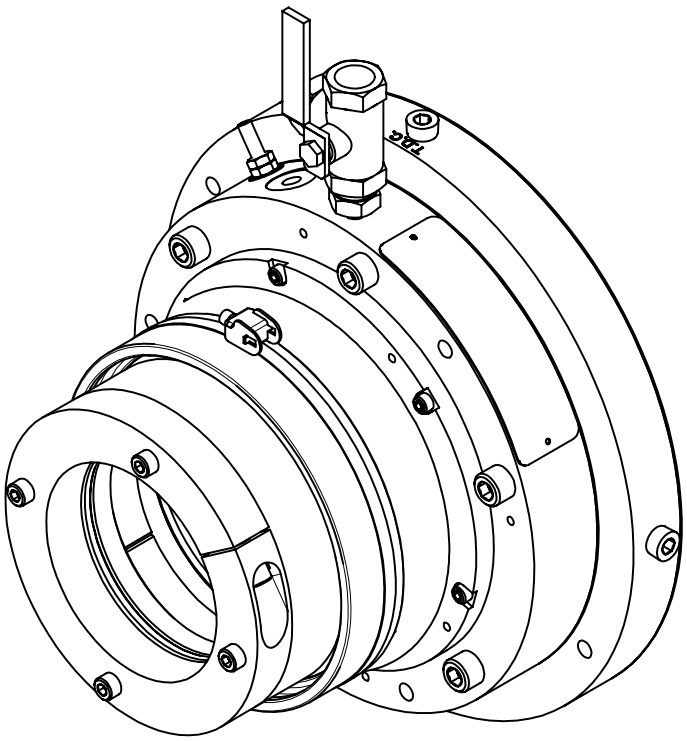

2.5. The ***PSE*** stern tube seal design provides:

- A statically mounted elastomer body capable of accepting a high degree of axial and radial movements, misalignment and vibration.
- Hard wearing long life Silicon Carbide Face and Seat components.
- An improved design safety and maintenance Inflatable Seal (IS) providing a large radial clearance, when un-inflated.
- Bronze main components offering high corrosion resistance, and:

- A "Partially Split" construction allowing fitting of replacement face and seat components without removal or disturbance of either the shaft or propeller.

2.6. The high performance materials used with the resilient mounting of both the face and seat - which have "lapped" surfaces - provides the following benefits.

- Replacement Face and Seat can be fitted without shaft removal.
- Reliable.
- Accommodates misalignment, vibration and axial and radial shaft movements.
- No liner required.
- High Abrasion resistance of Face and Seat.
- No galvanic corrosion.
- Extended life expectancy and service intervals.
- Low through life costs.

2.7. This combination provides a simple but very effective sealing arrangement capable of accommodating both radial and axial shaft movements, resulting in a "High performance - low maintenance" sealing solution.

3. STORAGE AND HANDLING.

3.1. All assemblies and components have been carefully inspected before shipment.

3.2. Each component is suitably packed and protected to prevent damage or deterioration during shipment, transit or storage. Any specific storage or handling requirements will be clearly identified on the package label(s).

3.3. Goods should be examined on receipt to verify the contents and their condition.

3.4. Wärtsilä UK limited shall be immediately advised of any damage or discrepancy in the scope of supply. Damage clearly due to handling in transit should be notified to the carrier; and copied to Wärtsilä UK limited

3.5. Keep goods in their original packing until just prior to installation in order to best protect them.

3.6. If goods have to be stored for long periods, they should be kept in their original packing, stored flat and unobstructed in a dry, cool and dark environment. To maximise life expectancy for rubber components, do not expose to direct sunlight or sources of Ultra Violet (UV) light or high concentrations of Ozone.

3.7. Care must be taken during handling to prevent any mechanical damage occurring due to dropping, crushing etc. Particular care and attention should be paid to the cleanliness of running / sealing surfaces of the silicon carbide face and seat. Despite being extremely hard, these components are also extremely brittle.

The silicon carbide face and seat will be specifically protected by packaging within their transit boxes

This protection should be left in place at all times unless conducting an inspection or actually installing the items – remove with care.

4. PREPARATION.

4.1. Remove all burrs and sharp edges from the shaft in the area the seal will be fitted. The surface of the shaft, local to the seal, should be clean and to the diameter and tolerance specified on the G.A. Drawing.

4.2. Ensure that all mating faces with the seal, i.e. the end face of the stern tube / housing / adaptor and the propeller shaft are machined to the following parameters:

Surface finish	▽	**- 250 µ in Ra or finer (Sterntube/Housing)** **- 32 µ in Ra or finer (Shaft in area of O-cord and Drive Clamp Ring)**
Flatness	▱	**0·003".**
Perpendicularity	⊥	**0·014"FIM (Measured outside the bolting P.C.D.)**
Concentricity	◎	**0.020"**

The forward end of the stern tube / housing / adaptor plate must be machined to accept the mounting ring securing screws as detailed on the G.A. Drawing.

4.3. All mating surfaces should be clean with no debris or old joint material, etc. present.

4.4. Make sure that the end of the bearing does not stand proud of the stern tube or housing as this could distort the mounting ring / inflatable seal.

4.5. It is **essential** that the running surfaces of the face and seat are protected at all times during storage, transit and installation to promote correct operation of the assembled unit. Even minor damage to these surfaces can promote leakage.

5. HEAD TANK LOCATION.

In a normal open water lubrication application, there will not be a "header tank" as such.

The flush water for the bearing/seal will normally be provided from a pumped system.

Details shall be as per the following figure:

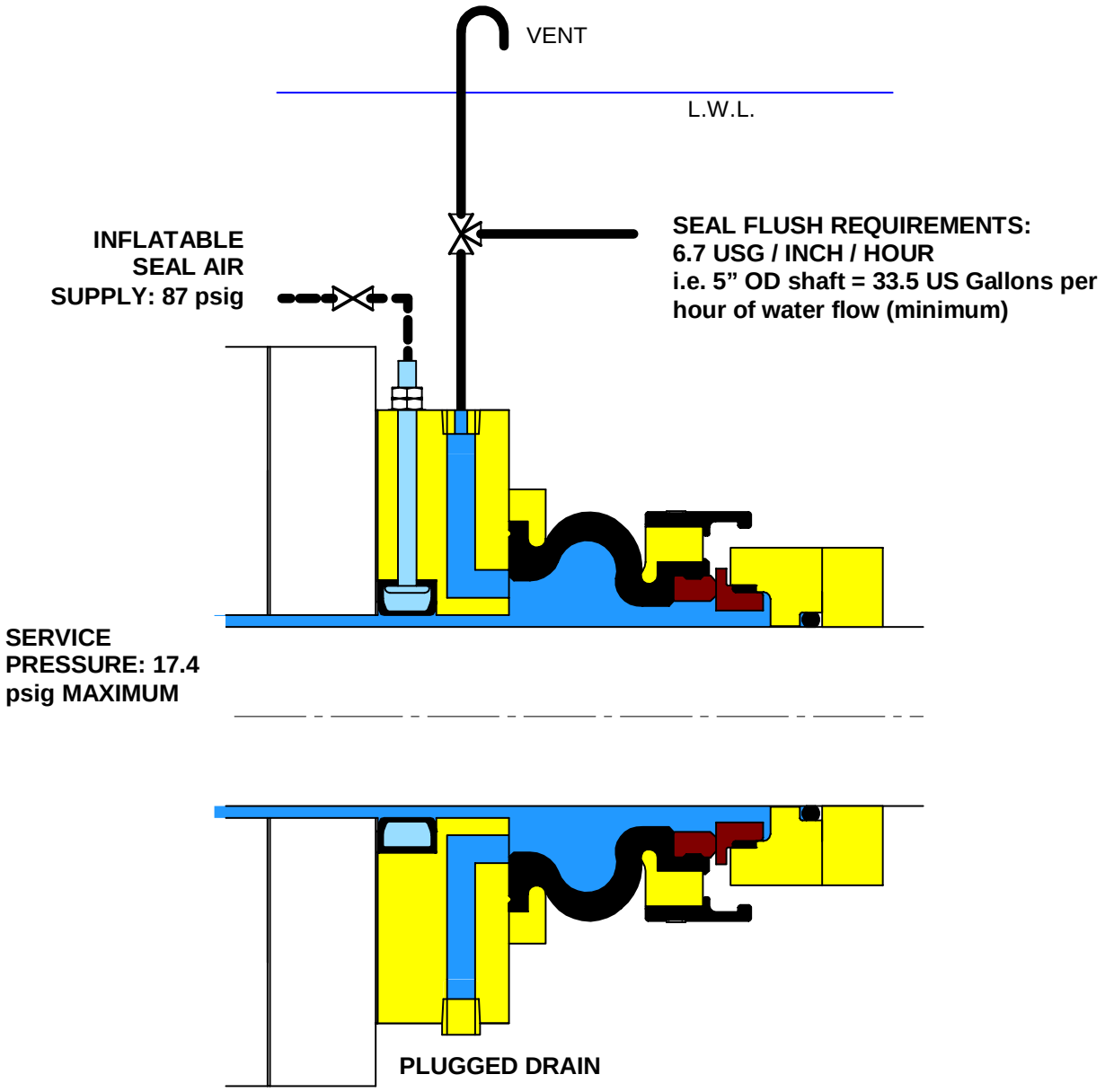

Note: For flush/cooling water filtration see Section 6.4.

6. SPECIAL INTERFACING REQUIREMENTS.

When installed, the PSE Inboard seal interfaces with various elements and components around it.

Ensuring that the interfacing requirements are met is essential to the successful installation, operation and performance of the seal.

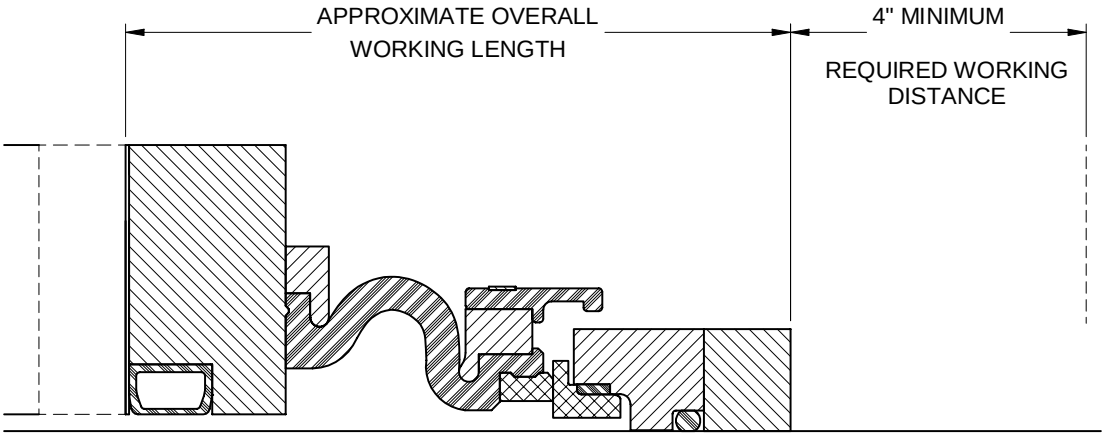

Four areas of interfacing are relevant.

6.1. The Bore/I.D. of the seat and drive clamp ring assemblies to the shaft.

The seal will be supplied with the bore of both assemblies sized to suit the stated shaft diameter.

6.2. The Mounting ring interface.

The surface of the Stern tube (or the optional adaptor plate) to which the Mounting Ring is to be fitted must comply with the requirements of Section 4 (preparation).

The mounting surface must be prepared in accordance with the G.A. drawing with regard to tapped holes for the mounting of the PSE seal to it.

The inner diameters of the stern tube (or adaptor plate if fitted) in way of the inflatable/maintenance seal plus the mounting ring itself are all directly related to the seal size in question. The shaft diameter must be as stated (ordered) and within the tolerance shown on the G.A. Drawing.

6.3. Axial Space.

Though the Inboard PSE seal does not require a "specific" Axial Space into which to fit, the space must be sufficient for installation and access.

Check that inboard of the stern tube forward surface (or the surface to which the seal is to be fitted); there is sufficient clear and unobstructed parallel shaft available to fit the seal.

The length required is the Approximate Overall length of the seal (as shown on the G.A. Drawing for the particular seal size) plus the compression to be applied to achieve the working length and working space to build/fit the seal.

The compression will not normally be stated on the drawing but it is usually circa 0.40” across all seal sizes.

Thus the "Axial Space" required to install the seal is the approximate overall length (which includes the 0.040” joint) plus 0.40” compression, plus a maintenance distance (of approximately 4”).

6.4. Service connections.

All connections and services (seal flush water, vent and air supply) as detailed on the G.A. drawing shall be provided.

(Section 5 and Section 7.9. also make reference to the service connections).

Water flush filtration requirements:

Recommended filtration for Water flush:

Clear water	basic strainer / screen
Dirty water	300µm filter

This is imperative to ensure the long term reliability of the seal. A pumped (positive displacement) constant source is preferred over a scooped supply.

7. INSTALLATION.

(Refer to relevant Drawing(s) - see Attachments - Section 15)

(Part number references are based on G.A. Drawing H76214 positions).

7.1. General Advice

- The PSE seal is designed to be installed with the Propeller shaft removed, withdrawn or de-coupled, to allow the non-split elements of the seal to be fitted. The Installation procedure is based upon fitting the seal in cartridge / main assembly form, over an exposed / withdrawn shaft.

- As referenced in the Sections "Preparation" and "Interfacing" (4 & 6) the components that the PSE seal will interface with, must be arranged/prepared as described in these Sections.

- The **spare** Silicon Carbide Interface components (face and seat) use “cracked” butts, which ensure their positive alignment during assembly (surfaces ‘knit’ together due to unique crack propagation geometry at each fracture).

7.2. Warning.

✳ The Silicon Carbide Interface components must be handled with extreme care. Be careful not to chip edges / surfaces, (especially at the butt surfaces of ***split*** spares – this will promote water leakage).

✳ ***An inflatable seal must not be left unattended when in service.***

7.3. Order of Component Assembly.

1. Adaptor plate assembly **(if fitted).**

2. Mounting ring and bellows assemblies (3 + 2) – the static part of the seal assembly – fitted as a cartridge unit (with the compression tooling assembly (CT) in place), to the Adaptor plate (or Sterntube if adaptor not fitted).

3. Seat Housing Assembly - **minus** O-cord. (1)

4. Seat Housing – O-cord. (1-4)

5. Drive Clamp Ring Assembly. (4)

6. Splashguard and clamp. (2-5/2-6)

7. Service Connections.

7.4. Adaptor Plate.

An adaptor plate can be supplied if required (extra cost option). This is fitted between the Stern tube / Bulk head and the PSE seal Mounting Ring (3-1). The adaptor plate can be supplied for the following reasons.

- The adaptor plate is supplied to ensure the bore of the stern tube/ bulkhead is equal to the mounting ring bore.
- The adaptor plate can be used for retrofits where the existing mounting holes are not compatible with the supplied seal.
- To provide a water flush connection for the bearing. The bearing flush water supply is often split to supply the seal as well.

7.4.1. If the adaptor plate is to be used then it must be installed over the shaft at this stage. When using the adaptor plate for retrofits the adaptor plate shall be drilled (by the yard / customer / end user) to suit the existing mounting positions. Wärtsilä UK limited are not responsible for the drilling of the supplied adaptor plate by third parties, or any subsequent rectification to paint work or similar associated features etc.

7.4.2. For applications where an adaptor plate is supplied fit the gasket, to the Stern tube / bulkhead. Then position the adaptor plate onto the Stern tube using the customer supplied Screws, having pre-applied thread lock.

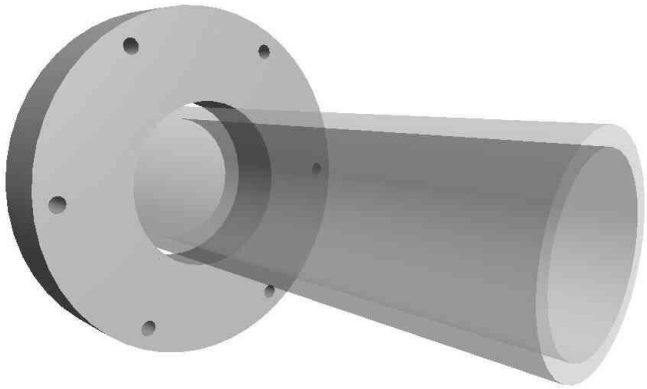

7.4.1 Centralise the Adaptor plate to the shaft to within 0.020” concentricity.

7.4.3. Tighten the mounting screws in an even, progressive and diametrically opposite sequence.

7.5. Static part of the Seal Assembly.

The Mounting Ring, Bellows and Face assemblies are supplied as an assembled unit (with the compression tooling fitted).

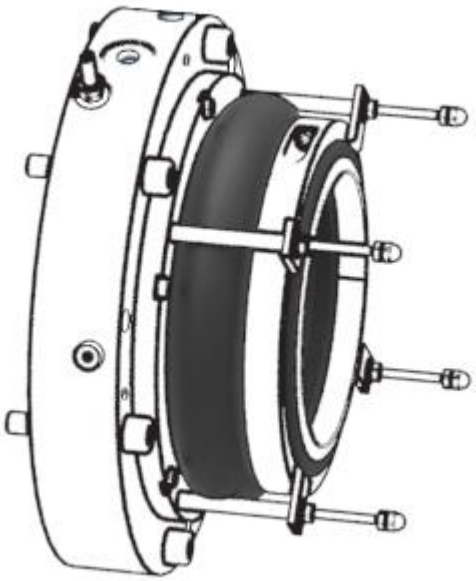

Ensure that the exposed shaft is perfectly clean before proceeding further.

7.5.1. Orientate the mounting Ring (3-1) to position its top dead centre position at “TDC”. Refer to the G.A. Drawing for the positions of connections, fasteners etc, also the mounting ring will be stamped TDC.

7.5.2. Now fit the gasket (3-6), to the stern tube / adaptor plate. Then position the Mounting Ring (correctly orientated for TDC) onto the stern tube / adaptor plate using the main securing Screws (3-3), having applied thread lock to them. Take extreme care to prevent the silicon carbide face from contacting the shaft during installation, as this is likely to cause damage.

7.5.3. Centralise the Mounting Ring (3-1) to the Shaft to ≤ 0.020” concentricity.

7.5.4. Tighten the screws (3-3) in an even, progressive and diametrically opposite sequence. Finally, tighten the fasteners to the torque value shown in the G.A. Drawing.

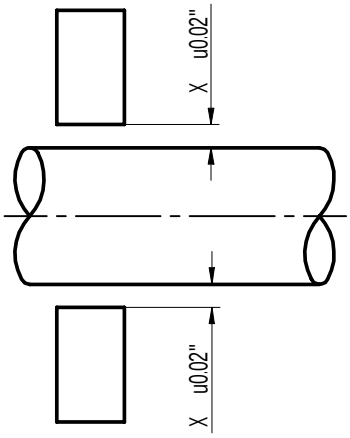

Note: With the emergency Inflatable Seal (IS) fitted into the mounting ring, it shall be tested at this stage. Connect a suitable foot / hand pump or other satisfactory means of inflation to the air supply connection on the mounting ring and pressurise to the activation pressure shown on the G.A. drawing of 87 psi(g) maximum.

The emergency seal should blow down fully and evenly to tightly contact the propeller shaft all round.

This test is to determine that the Inflatable Seal activates. Next conduct a pressure test on the Inflatable seal as described in Testing; section 8.1

When the Inflatable Seal has been successfully tested, remove the pressure and/or the pump and confirm that the Inflatable Seal retracts into the mounting ring recess.

7.6. Seat Housing Assembly.

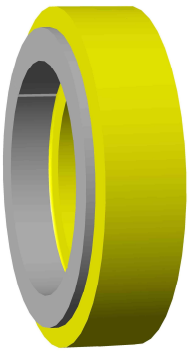

7.6.1. Confirm that the seat (1-1) is fitted fully into its sealing strip (1-3) within the seat housing (1-2). Very carefully fit the seat housing (1-2) over the shaft.

7.6.2. Clean both Face and Seat Interface Surfaces with a non-chlorinated solvent cleaner.

Check and re-confirm that both Face and Seat Interface surfaces are clean and undamaged.

7.6.3. Carefully push the Seat Housing (1-2) up to the Face (2-2) so that the Seat (1-1) and Face (2-2) are lightly contacting each other.

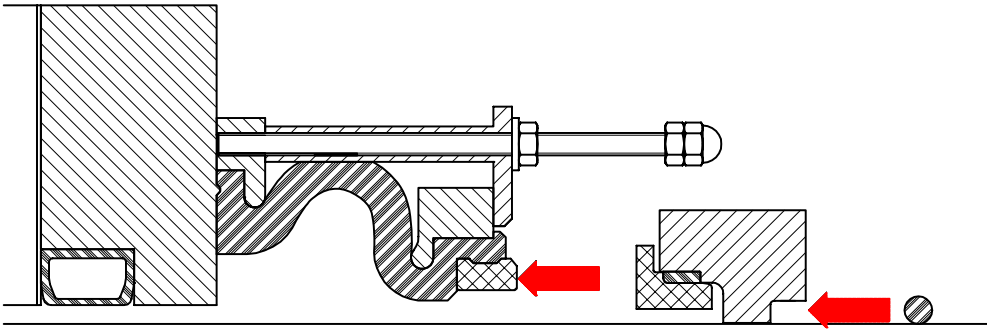

7.6.4. Fit the O-cord (1-4) around the shaft, and with the butts pressed together, fit it into its recess in the seat housing (1-2). There is no need to "join" the O-cord, as the length of the cord ensures that the butts will be in compression when fitted. However, if desired in order to aid the fitting of the O-cord, it may be joined using CyanoAcrylate (adhesive). Ensure the bond has integrity and that there is no step at the butts. Any dried glue can be carefully removed using a fine grade abrasive paper.

Do <u>not</u> cut or shorten the O-Cord!

7.7. Drive Clamp Ring Assembly (DCR).

7.7.1. Fit the Drive Clamp Ring – *DCR* (4-1) over the shaft, correctly orientated to the Seat Housing (1-2). The surface that contacts the Seat Housing (1-2) will be of a better finish towards the seat O-cord. Orientate the DCR correctly and slide it along the shaft until it contacts the Seat Housing.

Note: A wedge may be inserted at the butt to ease installation if necessary.

Ensure that the O-cord (1-4) was fitted into the recess in the Seat Housing and did not become trapped between it and the Clamp Ring.

7.7.2. Apply a suitable liquid thread locker (supplied) to the threads of the Drive Clamp Ring butt screw (4-2) and insert and lightly tighten it so that the Drive Clamp Ring just grips the shaft.

Note: Remove the wedge (if used) referenced above before tightening the butt screw.

7.7.3. Rotate the Drive Clamp Ring so that the holes in the DCR for the Drive Screws (1-5) are aligned with the tapped holes in the forward end of the Seat Housing (1-2).

7.7.4. Enter the Drive Screws (1-5), (having applied a suitable liquid thread lock) with so that they loosely fit through the Drive Clamp Ring and engage into the tapped holes in the Seat Housing (1-2).

Carefully and evenly tighten the Drive screws (1-5) until they are securely holding the Drive Clamp Ring (4-1) to the Seat Housing (1-2).

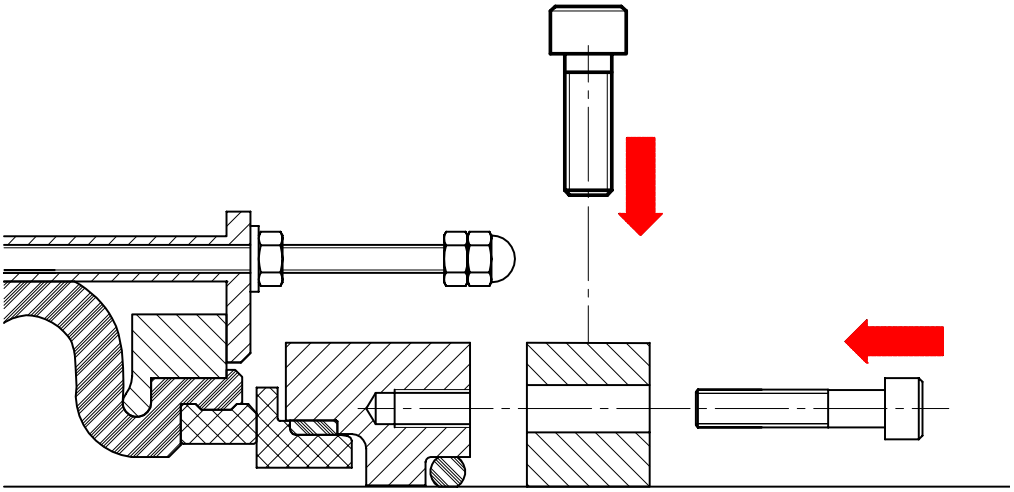

7.7.5. Carefully and evenly fully tighten the Drive Clamp Ring butt screw (4-2) to the torque shown on the G.A. Drawing.

7.7.6. Undo and remove the Compression Tooling Assembly (CT). Disassemble, clean and store it for re-use in the toolbox supplied with the Seal.

7.8. Seat Alignment.

7.8.1. Using a clock gauge on the Seat Housing (1-2) aft vertical surface, and with the turning gear engaged, slowly rotate the shaft to check the swash/alignment of the Seat Housing. It should be within 0.020" T.I.R. (Total Indicator Reading).

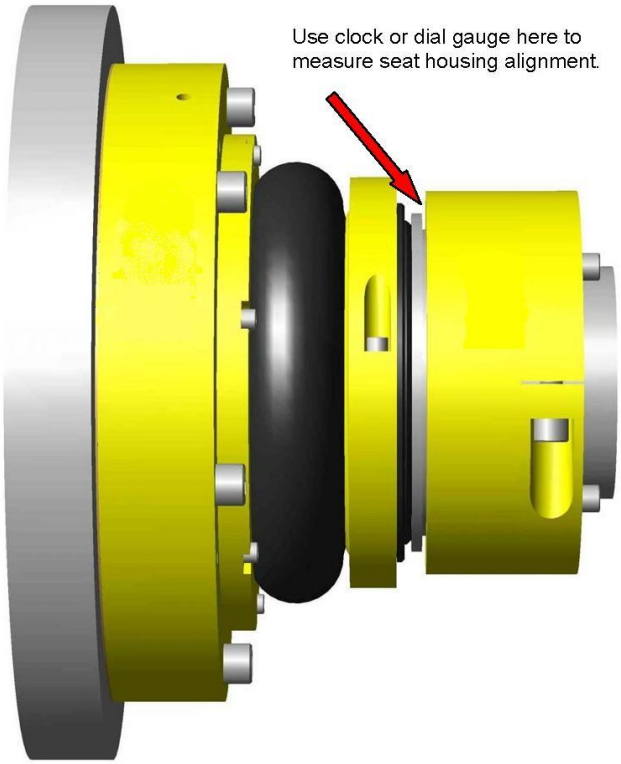

If it is not, carefully loosen the Drive Clamp Ring butt screw and adjust the DCR by lightly tapping it with a mallet until the Seat Housing is correctly aligned. When within tolerance, re-torque the DCR butt screw (4-2) to the torque shown on the G.A. Drawing, then re-check the compression / alignment reading (adjust again if necessary).

7.9. Service Connections.

7.9.1. Referring to the G.A. Drawing, connect the services to the mounting ring (3-1) as listed below.

- Seal water flush / vent connection in the mounting ring at TDC. Fit the Reducer (9-2) and the 3-way Valve (9-1).
- The drain port in the mounting ring, on the horizontal at 90º to the vent at TDC, is normally plugged.
- A single air connection to the Inflatable seal in the mounting ring.

All connections are identified on the relevant G.A. Drawing

7.9.2. Before connection, ensure that all service pipelines are clean and clear of particulate debris such as internal scale etc.

7.9.3. It is important that water and air are provided to the seal in the quantity and pressure as defined by the G.A. Drawing.

Water flush filtration requirements:

Recommended filtration for Water flush:

Clear water	basic strainer / screen
Dirty water	300µm filter

A pumped (positive displacement) constant source is preferred over a scooped supply.

7.9.4. Where the seal is **not** being connected to a permanent vent system, the vent connection at TDC in the mounting ring (3-1) must be plugged using the plug (3-7) supplied, **after** the seal has been fully flooded and all trapped air allowed to escape.

All threaded joints shall be sealed using PTFE tape or a proprietary thread sealing compound (not supplied).

7.10. Splash guard.

7.10.1. The guard (2-5) supplied should now be fitted using the Splash guard clamp (2-6) in accordance with the arrangement shown on the G.A.

7.10.2. The splash guard is supplied split and must be fitted around the face clamp (2-3). A clamp ring (2-6) to holds the guard in place; the rubber section locates around the face clamp as shown on the G.A. drawing.

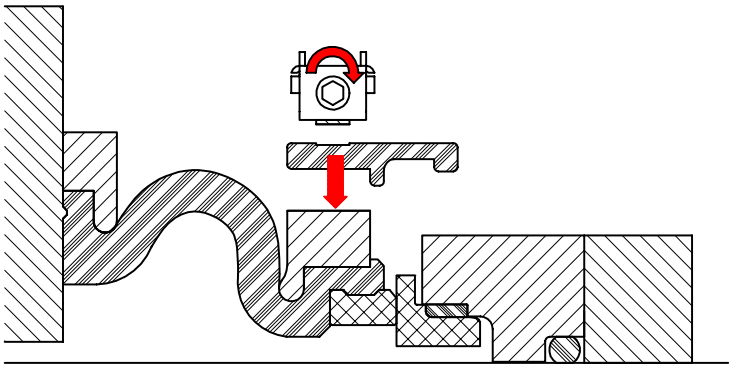

Fit the splash guard with the split at TDC and the hole at BDC, to route leakage to the bilge.

Fit the clamp (2-6) to the groove in the O.D. of the splash guard, and tighten it so that it secures the splash guard (2-5) in position on the face clamp (2-3).

8. TESTING.

8.1. Emergency Inflatable Seal.

The emergency seal may be operated by air or a suitable liquid.

Refer to Section 7.9. (Service Connections) regarding pipe work connections.

Test the inflatable using pressure to the maximum figure on the G.A. Drawing.

Test the inflatable (refer to Section 7.5.4.) and check that the seal is hard against the shaft all round.

With the inflatable seal activated, carry out a pressure drop test by closing the supply valve. The pressure may drop very slowly, however if there is a rapid loss of pressure, the connections, and if necessary the inflatable seal, should be examined.

8.2. Main Seal.

After the Seal had been fitted and compressed, and with the flush connections made as per Section 7.9, proceed to test the main seal as follows:

With the air supply to the inflatable seal on (at the activation pressure as stated on the G.A. Drawing), apply water pressure to the main seal via the water flush connection (Maximum 17.4 psi(g) as per the General Arrangement Drawing). A small leakage between the face and seat is acceptable on static test; this will decrease once the seal has 'run-in'.

9. NORMAL OPERATION.

During normal operation with the PSE seal functioning within parameters, all conditions should be stable.

★**NOTE:** "Prolonged" periods of slow running (less than 15 RPM) shall be avoided if at all possible.

9.1. Stable Operating Conditions.

9.1.1. Water ingress within acceptable limits.

9.1.2. No noticeable signs of the seal overheating

9.1.3. Bearing temperature(s) normal.

9.2. Routine checks that should be conducted.

9.2.1. Check for leakage regularly.

9.2.2. Check for signs of overheating regularly.

9.2.3. Check for flush water flow rate to the seal / bearing regularly.

9.2.4. Check the position (open / closed) of the flush water supply valve(s) daily.

9.2.5. Check the position and condition of the air supply valve daily (if connected to a permanently pressurised system).

9.2.6. Check the bearing / stern tube temperature daily.

9.2.7. Check the operation of any supply pumps, filters etc. (if fitted) on a daily basis.

9.2.8. Check the flush water flow alarm's (if fitted) weekly for correct operation.

9.2.9. Check the seal overall length 3 monthly (★shaft stopped and locked).

9.2.10. Check the torque of the drive clamp ring butt screws 3 monthly (shaft stopped and locked).

9.2.11. Check function and performance of the inflatable seal every 6 months (shaft stopped and locked).

10. LUBRICATION SYSTEM

For a PSE Inboard water lubricated seal, see below:

This defines the requirements of the system with respect to pressures and required differentials as well as flow rates.

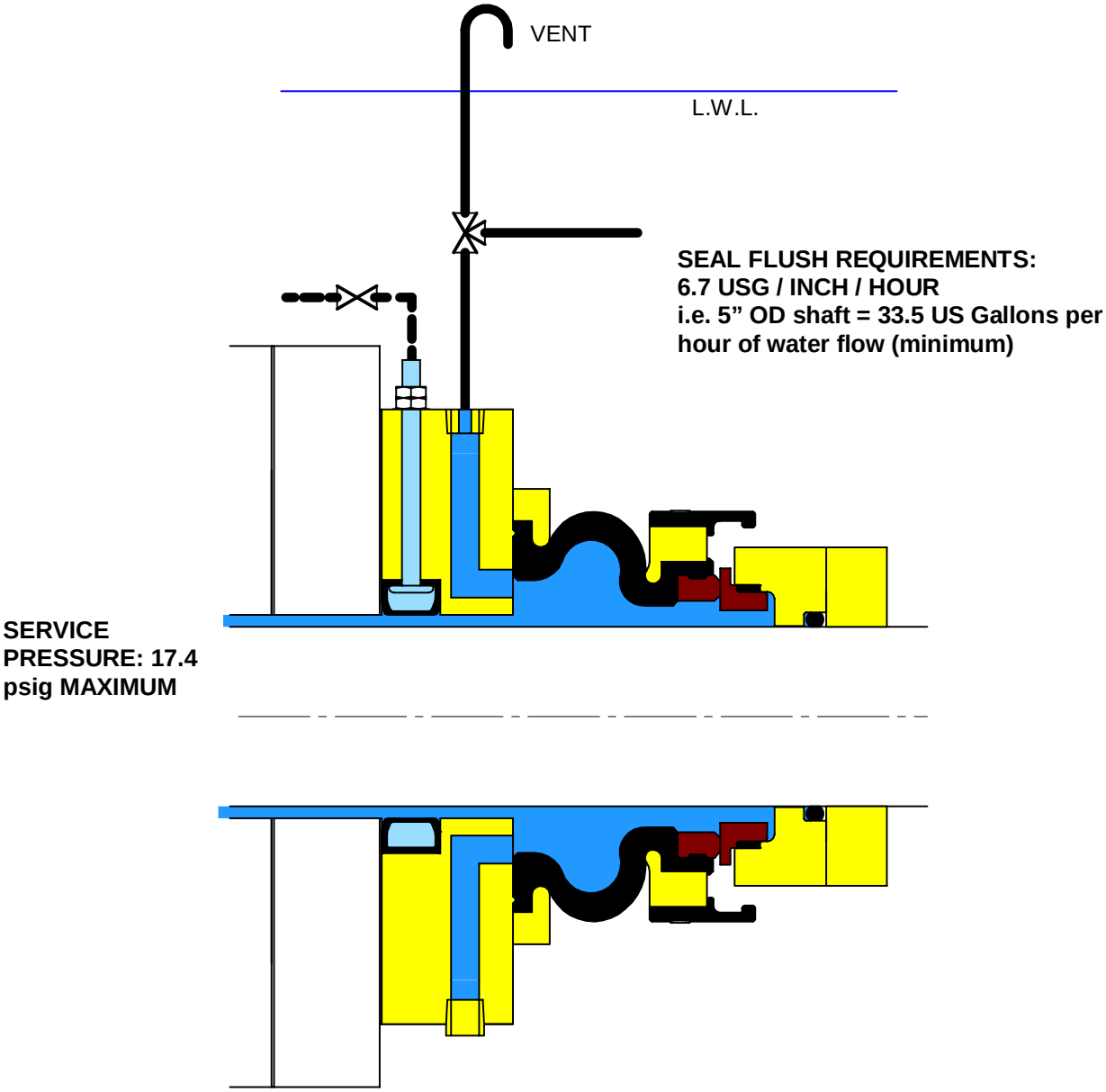

Note:

Seal flush: 6.7 USG / inch / hour. For example a 5" seal would require 33.5 USG per hour continuous water flow.

For flush / cooling water filtration see Section **11**.

11. RECOMMENDED LUBRICANT LIST.

For a PSE Inboard seal used in an "open water" lubrication system there are obviously no recommended lubricants.

The PSE inboard water lubricated seal is designed to work equally well on sea water or fresh (river or lake) water or on a mixture (estuarine) of these.

What is important is that the flow rate (steady supply) stated on the G.A. Drawing (which is a minimum figure) is maintained at all times when the propeller shaft is dynamic (rotating).

This figure (minimum flow rate) relates to the requirements of the PSE seal alone unless specific reference is made to or shown relating to bearing requirements.

Recommended filtration for Water flush:

Clear water	basic strainer / screen
Dirty water	300µm filter

A pumped (positive displacement) constant source is preferred over a scooped supply.

12. PROBLEM SOLVING - Level 'A'

12.1. Any problems with the PSE (open water) inboard seal will normally manifest themselves in one of two ways:

a) Water leakage from the seal.

b) Over heating of the seal.

(Refer to the associated causes and corrective actions in Section 12.4 and 12.5).

12.2. Evidence that either of the above has occurred will be demonstrated in one of the following ways. (Also refer to the associated problem solving flow charts in Section 12.3 as indicated below).

i) Excessive water leakage during routine inspection of the seal (flow chart 12.3.2.).

ii) A high level alarm warning from the bilge alarm (Flow chart 12.3.3.)

iii) A low flow in the flush supply activating the low flow alarm if one is fitted (Flow chart 12.3.4.)

iv) A high bearing / stern tube temperature alarm. (Flow chart 12.3.5).

12.3. "Flow Charts".

Explanations of the above, including cause, affect and corrective actions now follow:

12.3.1. Normal Operation.

For Normal Operating Conditions, refer to Section 9 (in conjunction with Head Tank location shown in Section 5).

Note: - As referenced in Section 9 (normal operation), “prolonged” periods of slow speed running (less than 15 min^{-1}) shall be avoided if at all possible.

12.3.2. SEA WATER LEAKAGE.

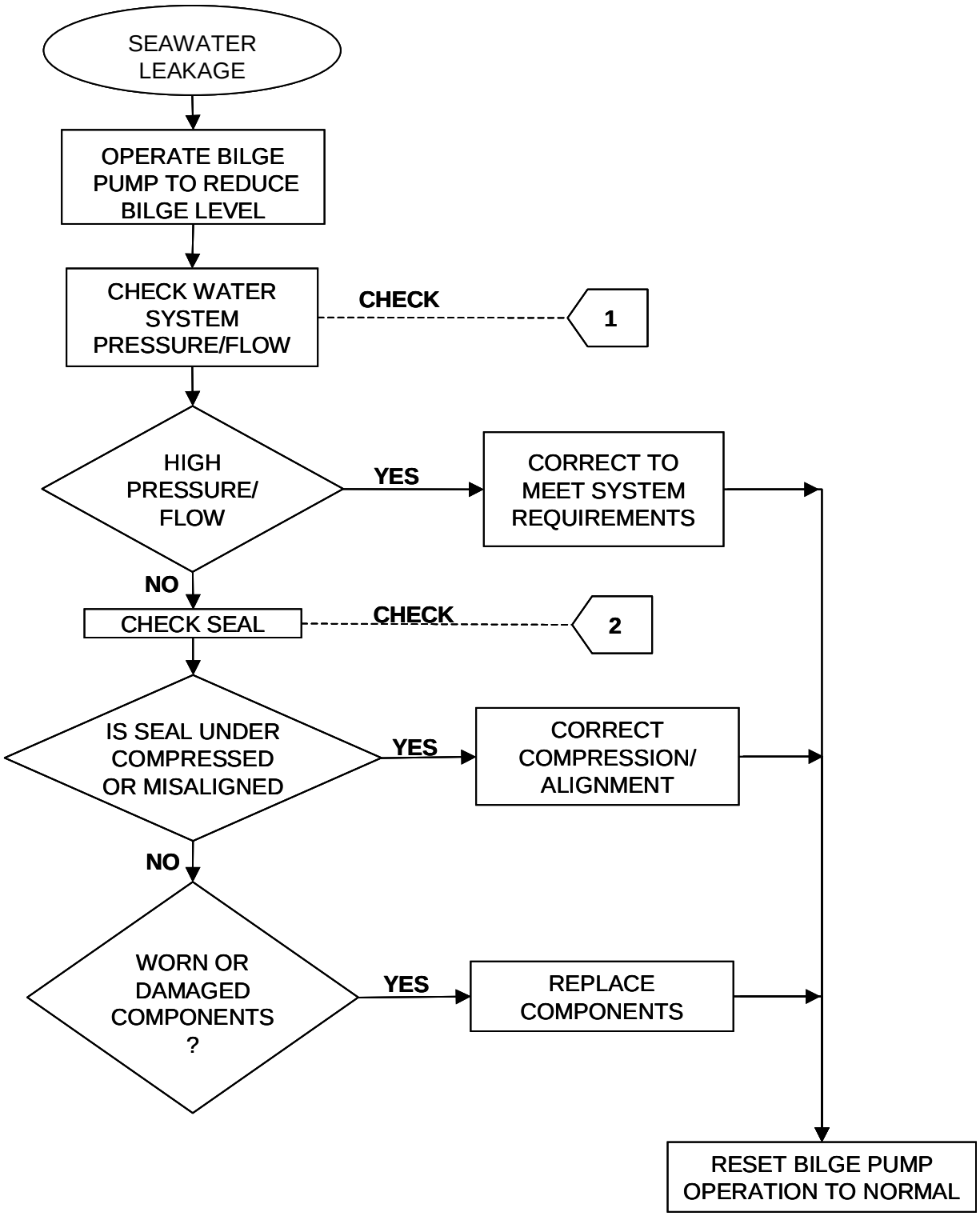

12.3.3. BILGE HIGH LEVEL ALARM.

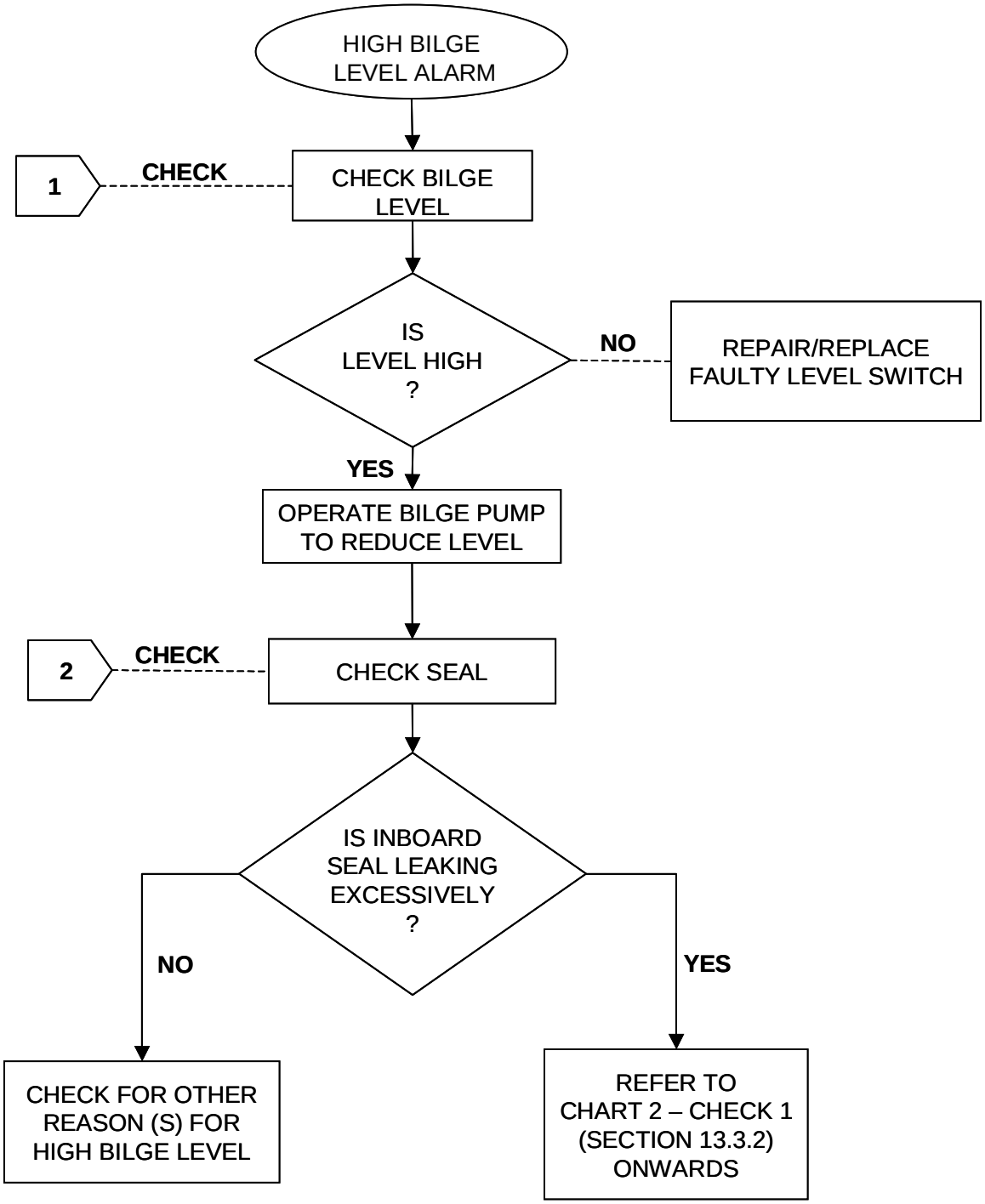

12.3.4. LOW FLUSH SUPPLY FLOW ALARM.

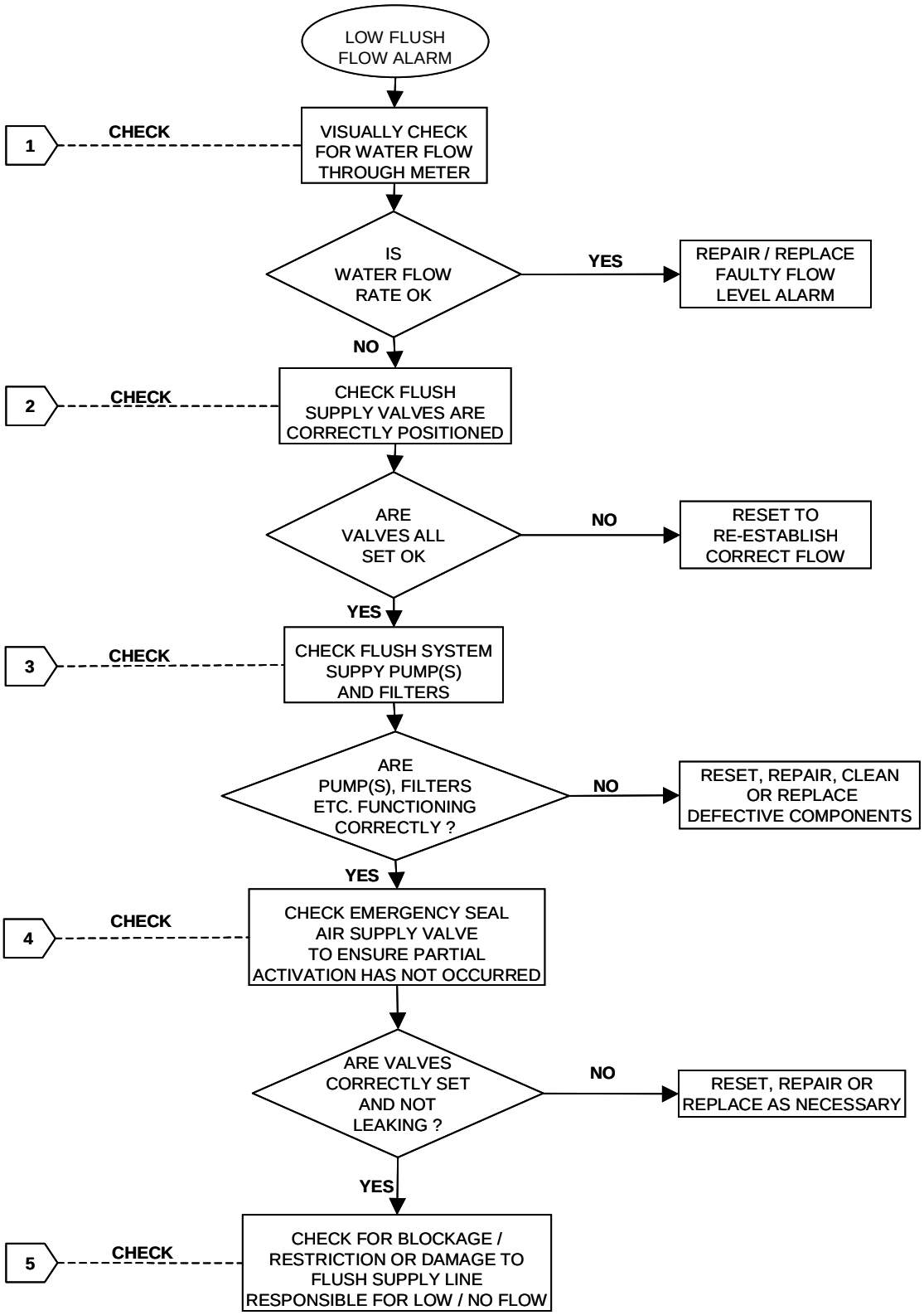

12.3.5. HIGH BEARING/STERNTUBE TEMPERATURE

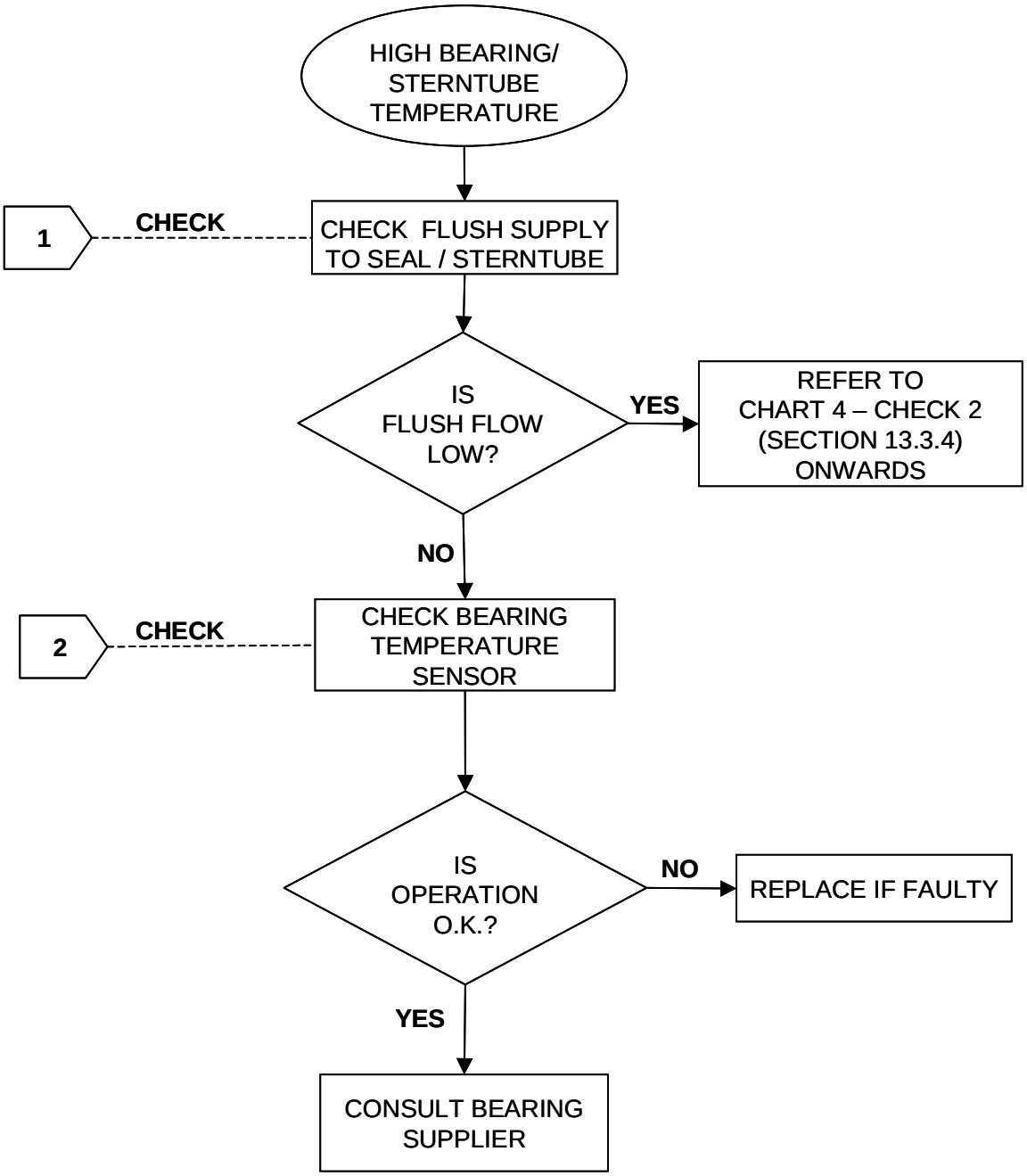

12.4. SECTION "A" - WATER LEAKAGE FROM THE SEAL.

Water leakage from the Inboard seal may be due to one or more causes. For each, a suggested course of corrective actions follows:

CAUSE		*CORRECTIVE ACTION*	
A1	Water pressure/flow too high	a	Reduce to that stated in the Technical Manual.
A2	Loss of seal compression due to age or wear	a	As a temporary measure, reset the fitting compression by re-setting the seat housing and drive clamp ring - using compression tooling until components can be replaced.
		b	Replace the component(s) responsible for the loss of compression.
A3	Insufficient compression due to installation or axial shaft movement	a	Establish the correct compression by resetting - the seat housing and drive clamp ring using the compression tooling.
		b	Determine and rectify the causes of excessive shaft movement.
A4	Excessive swash/misalignment of the seat housing.	a	Reduce to that stated in the Technical Manual.
A5	Debris between the Face and Seat.	a	Carefully remove any debris. If no damage has occurred a good seal should be re-established. If damage has occurred - refer to A6.
A6	Damage to the inboard seal.	a	If the seal is damaged and is leaking then proceed as for A2a having first checked and carefully removed any debris.
		b	Replace damaged components as soon as is possible.

12.5. SECTION "B" - EVIDENCE OF OVERHEATING OF THE SEAL.

As for Water Leakage, Overheating may be due to one or more causes. For each, a suggested course of corrective actions follows:

CAUSE		*CORRECTIVE ACTION*	
B1	Water pressure/flow too low.	a	Increase to that stated in the Technical Manual.
B2	Loss of Water Flush.	a	Check and re-set all flush supply valves to correct position/operation.
		b	Check supply pump(s) and filters etc. for correct operation.
		c	Check Inflatable seal air supply to ensure it is isolated or disconnected, and the Inflatable seal has not become partially activated.
		d	Check for blockage/restriction or damage to the Flush supply line(s) causing low/no flow.
B3	Excessive compression due to installation or axial shaft movement.	a	As for "A" 3a.
		b	As for "A" 3b.

NOTE: Where corrective actions involving material replacement refurbishment or adjustment have rectified a situation, then any "temporary" measures taken such as changes in lubricant pressures should be reverted to normal.

NOTE: If these Problem Solving measures fail to rectify a situation, then assistance and further advice should be sought via one of the contact addresses given in the front of the Technical Manual.

13. MAINTENANCE.

(Refer to relevant drawing(s) - see attachments - Section 15)

(Part number references are based on G.A. drawing H76214 positions).

13.1. The need for "maintenance" may be determined by several factors that are performance related. Alternatively, though the performance of the equipment may be perfectly satisfactory, maintenance may be carried out as part of a planned/preventative schedule. Overhaul of the equipment may also be carried out because it is part of a system or assembly that is itself needing or due for maintenance.

13.2. Factors that normally determine the need for maintenance are:

13.2.1. Performance: -

Water leakage through the seal.

13.2.2. Wear: -

Wear is normally associated with the "face" and "seat" in a face type seal.
However due to the extreme Durability and resistance to abrasion of Silicon Carbide materials used for these components in the PSE seal, wear will normally only be a factor in the most extreme of circumstances.

Normally a water lubricated seal operating "deep sea" experiences low levels of wear, however, operation in abrasive conditions, may lead to higher wear rates than when operating in clean water.

13.2.3. Damage: -

The seal can be damaged due to debris or physical intervention, however with an Inboard Seal this is not a common reason for Maintenance.

13.2.4. Age: -

The face and seat elements have no limitation with regard to age. Their service life will be governed by performance, wear" or damage. The life limit for the PSE elastomer components, (the O-cord, seat sealing strip, inflatable seal and bellows) is 10 years (elapsed time - not just operation) and renewal must be carried out every 2nd 4/5 year docking. However, it is good practice to replace all elastomer components on a 4/5-year basis co-incident with a major overhaul/docking of the vessel.

Periodic replacement of the PSE bellows is necessary because on assembly the bellows is compressed in order to provide the necessary closing force between the face and seat. Elastomers lose their elasticity over a period of time and the bellows may develop a "permanent set" with a subsequent loss of closing force.

The Inflatable seal, even if it has never been used, only tested, should as an **"emergency"** seal be replaced routinely every 4/5 years, although again, it has a maximum life "limit" of 10 years.

13.3. General Advice.

To replace or carry out maintenance on the PSE seal or any of its components, the propeller shaft will normally need to be de-coupled or withdrawn to allow removal of any non-split items.

However, It is possible to conduct an **in-situ** overhaul, **without removal of or disturbance / de-coupling of the propeller shaft**. It is expected that two methods of maintenance / refurbishment will actually be conducted:-

In-Situ - Overhaul, **without removal of or disturbance / de-coupling of the propeller shaft**. The seal can be maintained in two levels.

- **Replacement of wearing components.** This involves the replacement of the non-split original supply face and seat (2-2 and 1-1) with special **split** spares along with the seat sealing strip and seat housing O-cord – all contained in the **Service Kit-A** (5), as shown on the G.A. Drawing.
- **Replacement of wearing & working components.** This involves the replacement of wearing components as Service Kit-A and all working components specifically the bellows and inflatable seal (2-1 and 3-5) – all contained in the **Service Kit-C** (8), as shown on the G.A. drawing. The bellows are replaced with a special joined/bonded bellows – **however,** this item must be re-bonded using a **specialist hot bonding jig**. This hot bonding procedure should only be carried out by a Wärtsilä UK limited qualified service engineer. The Inflatable seal is also replaced **in-situ**, but it **must** (a) be hot bonded as per the bellows and (b) **the vessel must be out of the water.**

Workshop Overhaul, **with the shaft removed or de-coupled.**

- **Replacement of wearing components.** This involves the replacement of the non-split original supply face and seat (2-2 and 1-1) with non-split spares along with the seat sealing strip and seat housing O-cord – all contained in the **Service Kit-D (10),** as shown on the G.A. Drawing.
- **Replacement of wearing & working components.** This involves the replacement of all wearing and working components, and the rebuilding of the seal into cartridge assemblies, using non-split spares – all contained in **Service Kit-B** (6), as shown on the G.A. Drawing.

Note: If the shaft is to be moved or removed - the PSE Seal must first be disassembled.

None of the PSE seal components or assemblies are considered to be re-furbishable as such. Repair or maintenance is by component replacement.

A new seal face or seat should not be run against a previously used seat or face that exhibits any evidence of wear or grooving. One or both interfaces should be replaced where any signs of wear are evident.

All elastomers (including the Inflatable Seal) should, as referenced above, be replaced every 4/5 years during routine overhaul / dry-docking. Also, if any elastomer is disturbed, it should be replaced.

Fasteners should always be replaced (as a set) if a single one exhibits signs of damage, wear or stress.

Routinely – it is recommended that all fasteners are replaced every 8/10 years, especially any “butt” screws and the “drive“ screws.

If re-alignment of the seat is required while in service – inflate the emergency seal, fit the compression tooling, and align the seat as described in Section **7.8.1**.

Procedures for both in-Situ and Workshop refurbishment of the PSE Seal now follow:

13.4. In-Situ Disassembly.

13.4.1. As stated earlier, with the propeller shaft still fitted and connected, a certain level of refurbishment / replacement can be conducted.

Service Kit-A (5); comprises of the Face (2-2) and Seat (1-1) replacement with **split** spares (plus the Seat Sealing Strip (1-3) and the Seat Housing O-cord (1-4)),

Service Kit-C (8); is the same as service kit ‘A’ but also comprises of Bellows (2-1), inflatable seal (3-5), joint (3-6), and splash guard (2-5) replacement with **split** spares. The bellows and inflatable seal have to be cut and hot bonded (a vulcanisation process) around the shaft.

If the Mounting Ring (3-1) has been fitted with an adaptor plate, then unless the adaptor plate joint requires renewal, the adaptor plate can remain connected to the stern tube.

13.4.2. The hot bonding of the bellows / inflatable seal require specialist bonding tooling and should only be carried out by a qualified Wärtsilä service engineer.

13.4.3. Before removing any bonded / non-split item from an in-situ assembly, **ensure** that replacement spares are available along with the means to bond them.

13.4.4. Shut down and isolate all services that connect to the seal or bearing.

If the in-situ work is **in-water**, the Inflatable air supply service must of course be left connected and the seal inflated.

An inflatable seal must not be left unattended when in service.

13.4.5. Undo the splashguard clamp (2-6) and remove the splashguard (2-5) from around the face clamp (2-3).

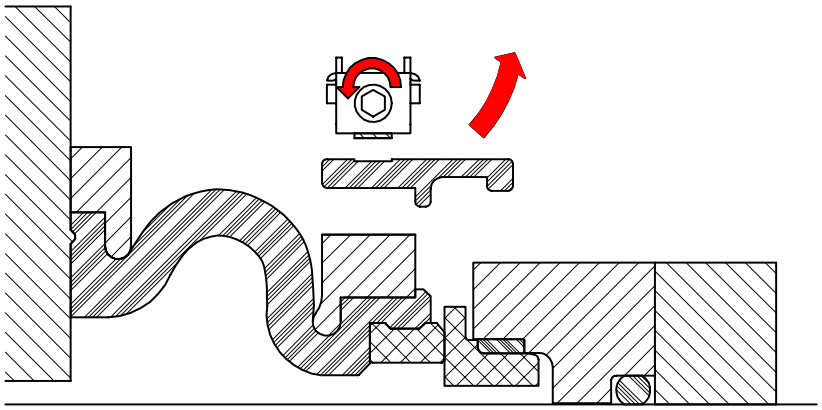

13.4.6. Next fit the Compression Tooling (CT) as follows in order to stabilise the seal during the first stage of disassembly.

- Fit the compression tool studding assembly (CT-2) through the compression tools (CT-1) and into the equi-spaced tapped holes in the bellows clamp (3-2). Ensure that the hooked ends of the compression tools (CT-1) locate over the face clamp (2-3) as shown on the G.A. drawing.

- Tighten the nuts (on the studding) evenly and progressively until the compression tools go “solid” against the bellows clamp.

13.4.7. Undo and remove the drive screws (1-5), which secure the seat housing to the drive clamp ring.

Next undo and remove the drive clamp ring butt screw and slide the slackened drive clamp ring (4-1) forward along the shaft.

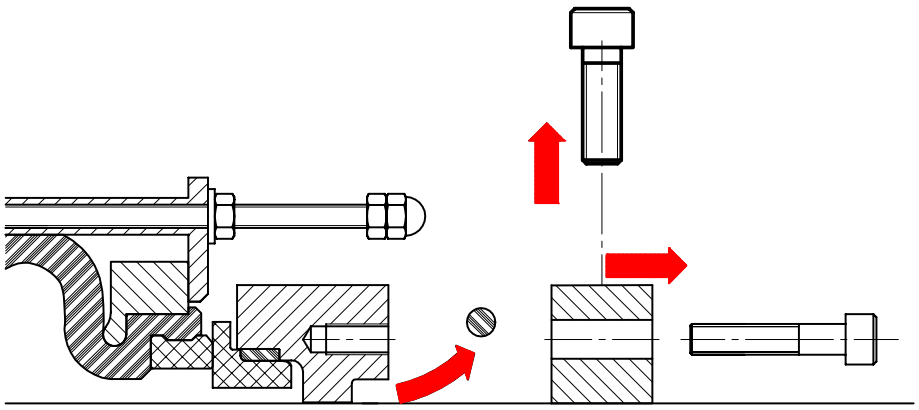

13.4.8. Remove and discard the now exposed seat housing O-cord (1-4). Then slide the seat Housing (1-2) along the propeller shaft so that both the face (2-2) and the seat (1-1) are now exposed. There is no need to split and remove the seat housing (1-2) from the shaft. However, if so desired, this can be achieved by undoing and removing the seat housing butt screws (1-6). When separating the two halves of the seat housing (1-2), ensure the alignment dowels (1-7) are not damaged.

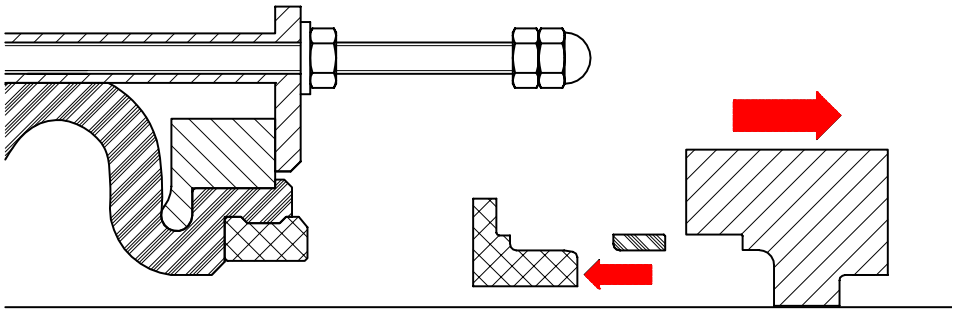

13.4.9. Having ensured that suitable replacement (**split**) spares are available, cut or break the seat (1-1), remove the pieces taking care not to touch the sharp edges exposed. Remove and discard the seat sealing strip (1-3).

13.4.10. With the seat and seat housing moved / removed, carefully remove the compression tooling, then undo and remove the face clamp butt screws (2-4). Once again, having ensured that a suitable replacement **split** spare is available, remove the Face (2-2) from the Bellows (2-1), and remove the face (2-2) from around the shaft.

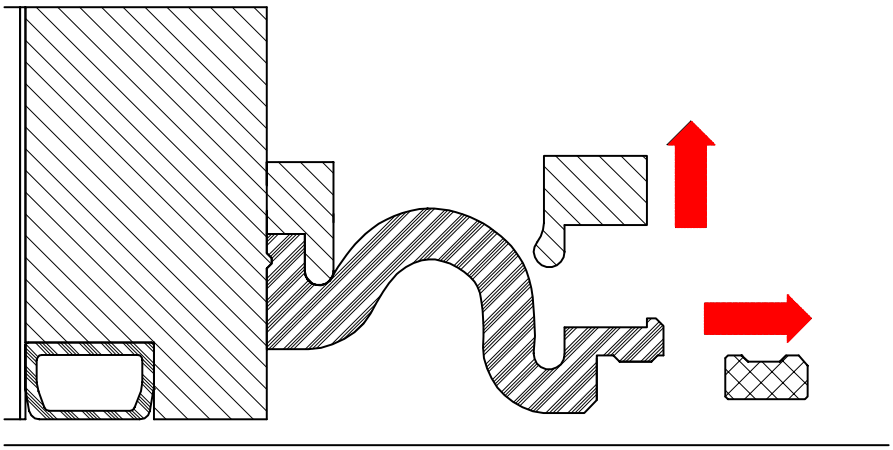

This completes the necessary disassembly requirements for Service Kit A. The seal can now be reassembled. Go to **13.5.6**.

13.4.11. The following continuation steps describe the necessary disassembly requirements for Service Kit C **ONLY**. This procedure should only be carried out if the means to bond the replacement bellows and inflatable seal around the shaft are available along with a Wärtsilä UK limited service engineer.

13.4.12. Undo and remove the bellows clamp screws (3-4), and separate the bellows clamp (3-2) from the bellows. Next cut and remove the Bellows from the shaft.

13.4.13. To replace the Inflatable Seal (3-5) the **vessel MUST be out of the water**, before it can be removed. Undo and remove the mounting ring screws (3-3) and release the mounting ring from the adaptor plate / stern tube. Then remove and discard the mounting ring joint (3-6).

Undo and remove the nuts and washer holding the air inlet tube tight to the Mounting Ring.

Ease the old Inflatable seal off of the shaped end of the air inlet tube then cut and remove it from the shaft.

13.5. In-Situ Reassembly.

Re-assembly is basically a reversal of the disassembly procedure using **split** spares. The first few steps describe the necessary reassembly requirements for Service Kit C **ONLY**.

13.5.1. The hot bonding procedure for the following should only be carried out by a Wärtsilä certified service engineer.

For bonding the Inflatable Seal (8-6) around the shaft refer to document **TDS 19/009**. (Refer also to **TDS 19/002** for bonding jig sizes).

For bonding the Bellows (8-5) around the shaft refer to manual **TM-FSE-HB**. (Refer also to **TDS 19/002** for bonding jig sizes).

13.5.2. Insert the Inflatable Seal (8-6) into its recess in the Mounting Ring (3-1) and manipulate the flanged end of the air inlet tube (which is loose in the Mounting Ring) through the hole in the Inflatable Seal. Hold the air inlet tube in place with the washer and nuts.

Re-fit the Mounting Ring to the stern tube (or adaptor plate if fitted), with a new split Joint (8-7), in a similar manner to that described in "Installation" sections **7.5.1** to **7.5.4**.

13.5.3. The new hot bonded Bellows will require fitting into the Bellows Clamp (3-2). Ensure both items are perfectly clean and undamaged then fit the flanged end of the Bellows (8-5) through the Bellows Clamp (3-2) as shown on the G.A. Drawing.

13.5.4. Confirm that the location on the Mounting Ring (3-1) where the Bellows (8-5) and Bellows Clamp (3-2) fit is perfectly clean.

Locate the Bellows and Bellows Clamp against the Mounting Ring and secure with the screws (3-4) having first applied a suitable liquid thread lock (supplied). Tighten the screws in an even, progressive and diagonal sequence to the torque specified on the G.A. Drawing.

13.5.5. This completes the necessary reassembly requirements for Service Kit C only. The following continuation steps describe the reassembly requirements with the Bellows secured to the Mounting Ring for both Service Kit A and C.

13.5.6. Carefully place the two halves of the (spare-**split**) Silicon Carbide Face (5-1) around the shaft, orientated as shown on the G.A. Drawing.

Ensure that the “cracked” butts of the Face halves perfectly align (i.e. “knit” together)

Carefully push the Face (5-1) into the recess of the front of the Bellows.

Ensure that the Face is fully entered into the recess and is contacting the Bellows on its O.D. and back surfaces as shown in the G.A. Drawing.

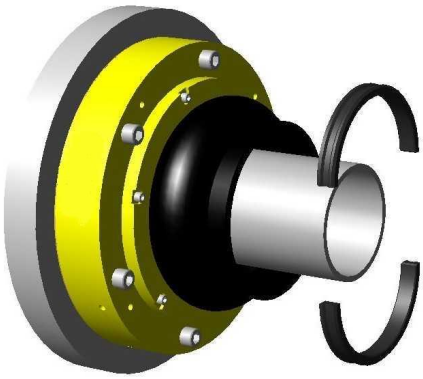

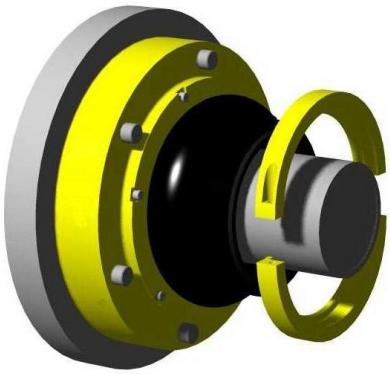

13.5.7. Place both halves of the Face Clamp (2-3) around the Bellows assembly (orientate the Clamp Ring as shown on the G.A. Drawing).

13.5.8. Apply liquid thread lock (supplied) to the threads of the Face Clamp butt screws (2-4) and lightly tighten them.

13.5.9. Re-check the face. It is imperative that no step is detectable at the butt joins.

13.5.10. Tighten the Face Clamp butt screws (2-4) evenly and progressively (maintaining an even gap at the butts) to the torque value shown on the G.A. Drawing.

13.5.11. Fit the compression tool studding assembly (CT-2) through the compression tools (CT-1) and into the equi-spaced tapped holes in the bellows clamp (3-2). Ensure that the hooked ends of the compression tools (CT-1) locate over the face clamp (2-3) as shown on the G.A. drawing.

Tighten the nuts (on the studding) evenly and progressively until the compression tools go “solid” against the bellows clamp.

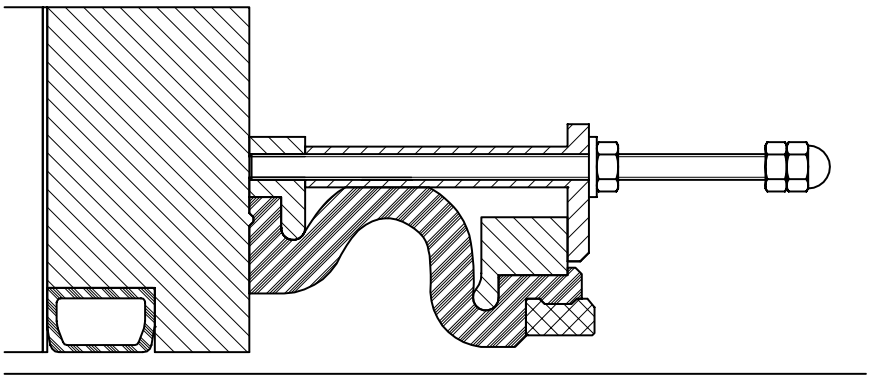

The fitting compression is automatically set by the Compression Tooling.

13.5.12. Thoroughly clean the shaft surface over which the seal will be re-assembled. Clean and apply a coating of a weak soapy water solution to the recess in the seat housing (1-2).

Insert the Sealing Strip (5-3) into the recess ensuring that the radiused edge of the strip is outboard and on the inner diameter.

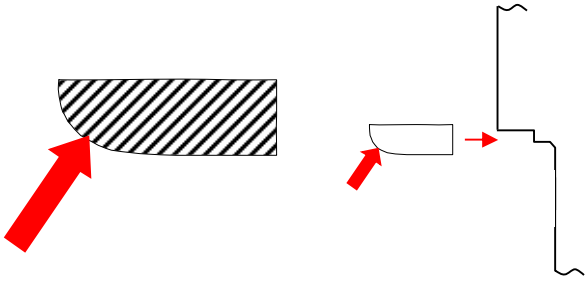

13.5.13. The Sealing Strip is provided over length (see below). To overcome the "apparent" excess length, the strip ends should be butted together in the recess (**not** glued or bonded) and the excess rubber slowly worked around whilst exerting light pressure on the loop.

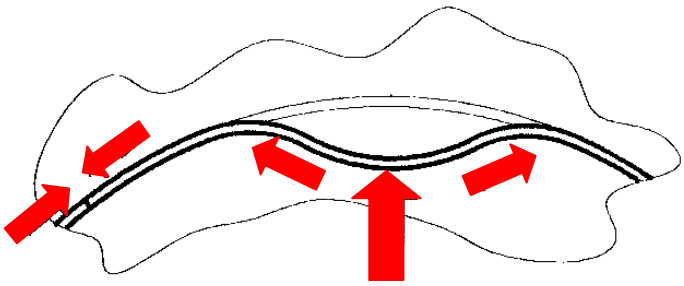

NOTE: As above, the Sealing Strip is supplied over length to ensure that the ends butt hard together and that the strip fully supports the seat. The sealing strip shall **not** be cut or shortened.

13.5.14. Before fitting the Seat (5-2) into the Sealing Strip (5-3), apply a coating of a weak soapy water solution to the exposed surfaces of the Sealing Strip.

13.5.15. Carefully place both halves of the spare **split** silicon carbide Seat (5-2) around the shaft correctly orientated to the Seat Housing (1-2) as shown on the G.A. Drawing.

13.5.16. Bring both halves of the “cracked” (**split** spare) Seat (5-2) together to form a perfect ring and insert the joined seat into the Sealing Strip (5-3). Arrange the seat in the sealing strip so that the split in the sealing strip is **not** co-incident with either of the butt joins in the split Seat.

13.5.17. Ensure that the Seat (5-2) is fully inserted into the Sealing Strip (5-3) and that the butts are perfectly aligned with no detectable step being apparent.

It is very important that the two halves should be perfectly flat.

13.5.18. Clean both Face and Seat interface surfaces with a non-chlorinated solvent cleaning.

Check and re-confirm that both face and seat Interface surfaces are flat, clean and undamaged.

13.5.19. Carefully push the Seat Housing aft so that the Seat (5-2) and Face (5-1) are lightly contacting each other.

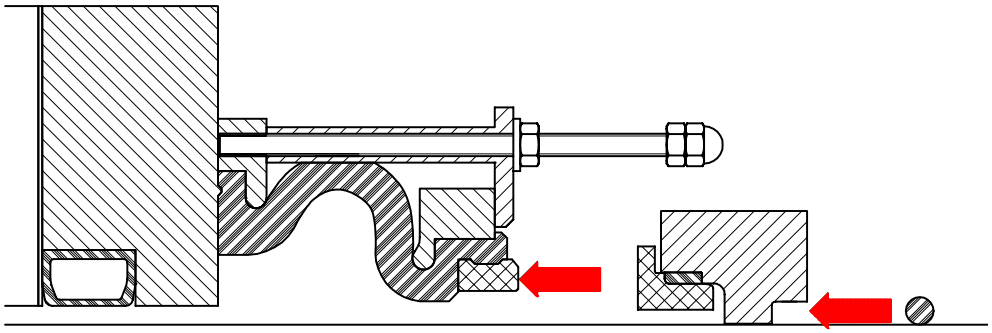

13.5.20. Fit the O-cord (5-4) around the shaft, and with the butts pressed together, fit it into its recess in the Seat Housing (1-2). There is no need to “join” the O-cord, as the length of the cord ensures that the butts will be in compression when fitted. However, if desired in order to aid the fitting of the O-cord, it may be joined using CyanoAcrylate (adhesive). Ensure the bond is good and that there is no step at the butts. Any dried glue can be removed using a fine grade abrasive paper.

Do not cut or shorten the O-Cord!

13.5.21. Slide the Drive Clamp Ring (4-1) along the shaft until it contacts the Seat Housing (1-2).

Ensure that the O-cord (5-4) was fitted into the recess in the Seat Housing and did not become trapped between it and the Drive Clamp Ring.

13.5.22. Apply liquid thread lock (supplied) to the threads of the Drive Clamp Ring butt screws (4-2) and insert and lightly tighten it so that the Drive Clamp Ring (4-1) just grips the shaft.

13.5.23. Rotate the Drive Clamp Ring (4-1) so that the holes in the DCR for the Drive Screws (1-5) are aligned with the tapped holes in the forward end of the Seat Housing (1-2).

13.5.24. Enter the Drive Screws (1-5), having applied a suitable liquid thread lock so that they loosely fit through the Drive Clamp Ring (4-1) and engage into the tapped holes in the Seat Housing (1-2).

Carefully and evenly tighten the Drive Screws (1-5) until they are securely holding the Drive Clamp Ring (4-1) to the Seat Housing (1-2).

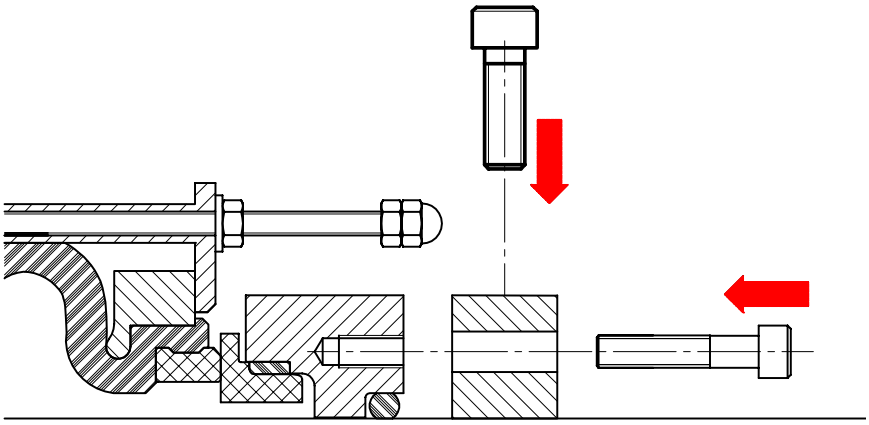

13.5.25. Carefully and evenly fully tighten the Drive Clamp Ring butt screw (4-2) to the torque shown on the G.A. Drawing.

13.5.26. Undo and remove the Compression Tooling assembly (CT). Disassemble, clean and store it in the toolbox supplied for future use.

13.5.27. Using a clock gauge on the Seat Housing (1-2) aft vertical surface, and with the turning gear engaged, slowly rotate the shaft to check the swash / alignment of the seat housing.

If the Inflatable Seal is employed, it must be released before turning the shaft.

13.5.28. The alignment should be within 0.020” T.I.R. (Total Indicator Reading).

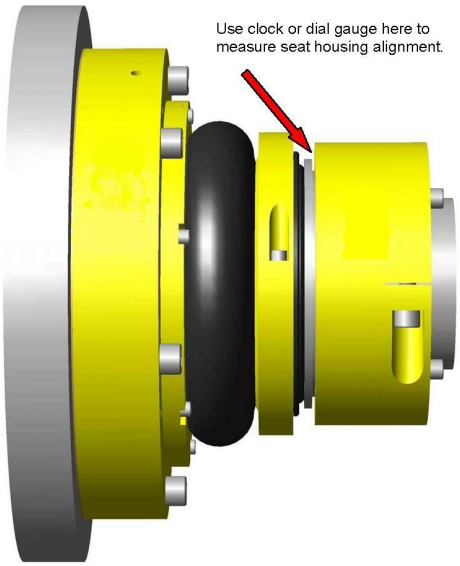

If it is not, (re-inflate the Inflatable Seal if the work is in water) carefully loosen the drive clamp ring butt screw and adjust the D.C.R. by lightly tapping it with a mallet until the Seat Housing is correctly aligned. When within tolerance, re-torque the DCR butt screw (4-2) to the torque shown on the G.A. Drawing, then re-check the swash/alignment reading (adjust again if necessary).

13.5.29. Re-connect all service connections as referenced in Section **7.9**.

13.5.30. Refit the Splashguard as referenced in Installation Section 7.10 – however, remember that unless it was removed, the Splashguard will already be bonded.

13.5.31. The seal is now re-assembled. Test the seal as referenced in Testing Section 8.

13.6. Workshop disassembly.

With the propeller shaft removed or de-coupled the seal can be dismantled and removed to replace all wearing and working components.

Service Kit-D (10); comprises of the Face (2-2) and Seat (1-1) replacement with **non-split** spares (plus the Seat Sealing Strip (1-3) and the Seat Housing O-cord (1-4)),

Service Kit-B (6), comprises of the bellows (2-1), inflatable seal (3-5), face (2-2) and seat (1-1) replacement with **non-split** spares (plus the seat sealing strip (1-3), seat housing O-cord (1-4), splash guard (2-5), and joint (3-6)).

13.6.1. Before removing the propeller shaft or de-coupling it:

(a) Remove the splash guard and fit the compression tooling (CT) as advised in Sections 13.4.5 and 13.4.6, to stabilise the seal. In this instance however, the splash guard should be cut and removed from the shaft.

(b) Undo and remove the drive clamp ring butt screw (4-2) plus the drive screws (1-5) holding the D.C.R. to the Seat Housing.

13.6.2. Then, **either:**

- Carefully remove the drive clamp ring and seat housing (complete with the seat) from the de-coupled shaft, then disconnect the seal housing from the adaptor plate/ stern tube and remove the remainder of the seal from the shaft, **or:**

- Slowly withdraw the shaft outboard, removing the DCR and seat housing and seat as the shaft is withdrawn. Disconnect and remove the mounting ring from the adaptor plate/ stern tube and remove it after the shaft has been withdrawn.

Note: As for "In-Situ Disassembly" (13.4.1.), **if** the mounting ring (3-1) is fitted to an adaptor plate, then unless the adaptor plate joint requires removal, the adaptor plate can remain in place during a workshop refurbishment of the PSE seal.

13.6.3. Transport all removed seal components/assemblies to a workshop for a full disassembly and subsequent overhaul/rebuild using **non-split** spares contained in **Service Kit-B** (6) or **Service Kit-D** (10).

13.6.4. Disassemble the seat assembly by removing and discarding the O-cord (1-4) and the silicon carbide seat (1-1) plus the sealing strip (1-3) **once it has been confirmed that a new non-split Seat and spare elastomers are available for the re-assembly**.

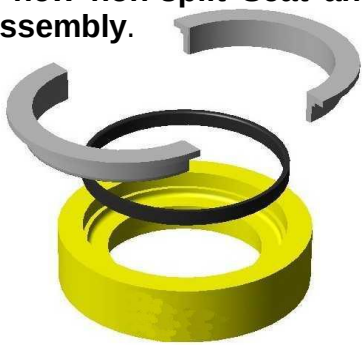

Note: The old seat can be re-used if it is **perfectly flat** and exhibits **no** signs of damage, cracking or chipping.

13.6.5. Remove the compression tooling assembly (CT) and then sit the non-rotating elements of the seal, on the mounting ring (3-1) on a suitable work surface.

13.6.6. Undo and remove the face clamp butt screws (2-4) followed by the split face clamp (2-3).

13.6.7. Remove the face (2-2) and discard it **once it has been confirmed that a new non-split spare is available for re-assembly.**

Note: The old silicon carbide face can be re-used, but **only if** (as with the Seat), it is **perfectly flat**, and exhibits no signs of damage, cracking or chipping.

13.6.8. If wearing components only are to be replaced (Service Kit-D (10)) no further dismantling is necessary. The seal can now be reassembled. Go to **13.7.10**.

13.6.9. Undo and remove the Bellows Clamp screws (3-4).

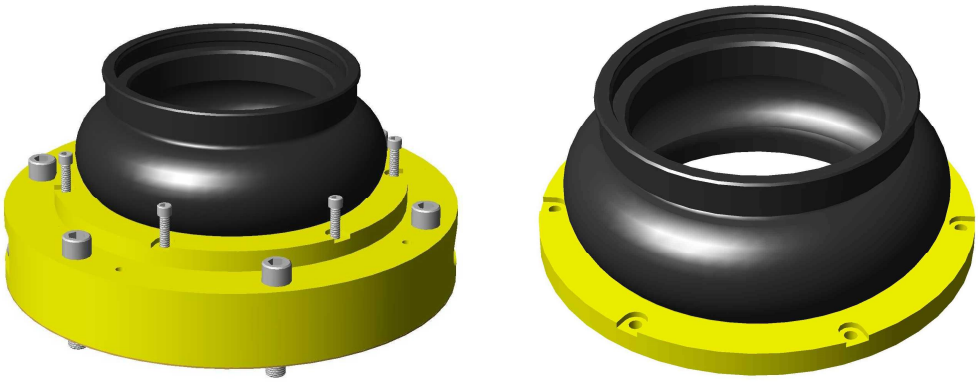

13.6.10. Separate the Bellows (2-1) from the bellows clamp (3-2) and discard the old bellows **once a new spare has been confirmed as being available on-site.**

13.6.11. Undo the nuts securing the Inflatable seal (3-5) connection pipe on the O.D. of the mounting ring (3-1) remove the Inflatable seal plus its connection pipe from the mounting ring without further disassembly.

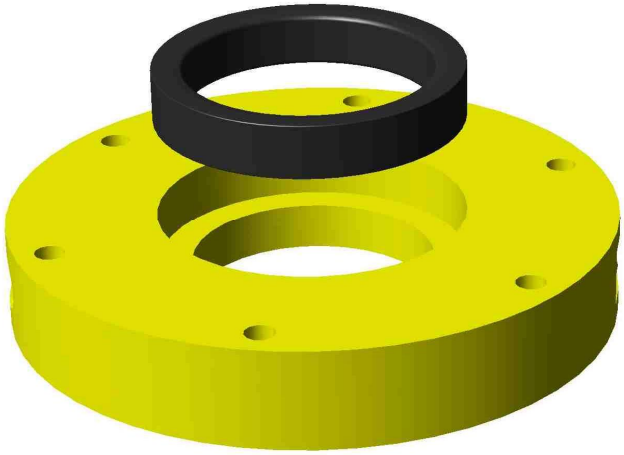

13.6.12. Ensure that all components that are to be re-used in the rebuild of the seal are clean, in adequate condition and suitable for re-use for an extended period of time.

Substitute all components that need replacing due to routine replacement of elastomers or damage/wear.

13.7. Workshop reassembly.

13.7.1. The PSE seal should be reassembled using **non-split** spares. The first few steps describe the necessary re-assembly requirements for (**service Kit-B**) only into component form identical to those supplied in a new assembly. The installation procedure will then follow that described for a new supply unit in Section 7 (Installation).

13.7.2. To conform to this, the components should be assembled into the following:

1. Drive clamp ring assembly.
2. Seat housing assembly – less 'O'-cord (6-4).
3. Seat housing 'O'-cord (6-4).
4. Static part of seal assembly comprising: mounting ring + inflatable seal + bellows clamp + bellows + face + face clamp – all assembled as a unit with their associated fasteners and with the compression tooling (CT) in place and the housing joint loose.
5. Splashguard + splashguard clamp – separated.

13.7.3. As can be seen from the above, only **2** and **4** require **assembly** prior to installation.

Proceed as follows

As has been stated earlier – **all** items/components used in the re-assembly must be perfectly clean, undamaged and fit for purpose. For a workshop re-assembly, non-split components are normally used. i.e. as would be supplied for a new assembly – initial fit.

13.7.4. Take the mounting ring (3-1) and lay it flat on the desk with the back facing upwards. Fit the shaped end of the air inlet tube into the new inflatable seal (6-6), then slide the inlet tube into the bore on the inside diameter of the mounting ring and slide the inflatable seal into the recess in the back of the mounting ring. Ensure that the mounting ring recess is perfectly clean.

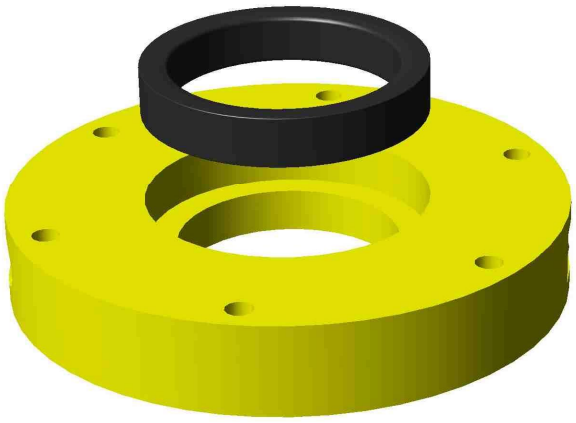

13.7.5. With the inflatable seal fitted into the recess, the Inflation tube will be protruding from the O.D. of the mounting ring.

13.7.6. Place the washer and nuts provided onto the exposed inflation tube and screw the nuts down until they contact the washer to the mounting ring surface. Tighten them in turn to secure the inflatable seal.

13.7.7. Fit the Bellows (6-7) through the Bellows Clamp (3-2) orientated as shown on the G.A. Drawing.

13.7.8. Locate the bellows (6-7) and bellows clamp (3-2) against the forward surface of the Mounting Ring (3-1).

Secure the bellows clamp (3-2) to the mounting ring (3-1) using the bellows clamp screws (3-4), having first applied a suitable liquid thread lock (supplied).

Tighten the screws (3-4) using an even progressive and diagonal sequence until the torque specified on the G.A. Drawing is reached.

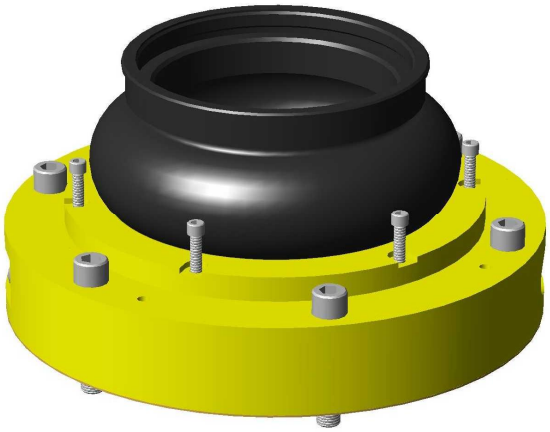

13.7.9. This completes the necessary reassembly requirements for Service Kit B only. The following continuation steps describe the reassembly requirements with the Bellows secured to the Mounting Ring for both Service Kit B and D.

13.7.10. Carefully push the face (6-1) into the recess of the front of the bellows (6-7). Ensure that the face is fully entered into the recess and is contacting the bellows on its O.D. and back surface as shown in the G.A. Drawing.

13.7.11. Place both halves of the face clamp – (2-3) around the bellows assembly (orientate the clamp ring a shown on the G.A. Drawing).

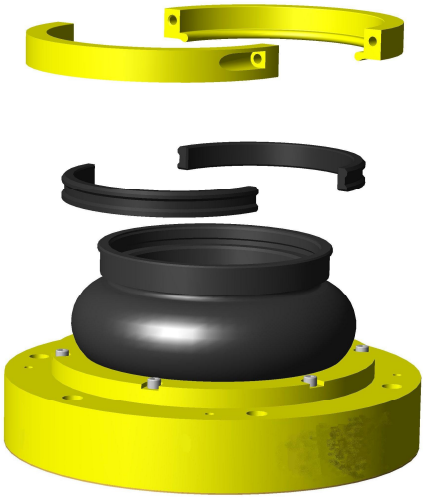

13.7.12. Apply liquid thread lock (supplied) to the threads of the Face Clamp butt screws (2-4) and lightly tighten them.

13.7.13. Tighten the Face Clamp butt screws (2-4) evenly and progressively (maintaining an even gap at the butts) to the torque value shown on the G.A. Drawing.

13.7.14. Fit the Compression Tooling Assembly (CT) as described in **13.5.11** in order to stabilise the seal.

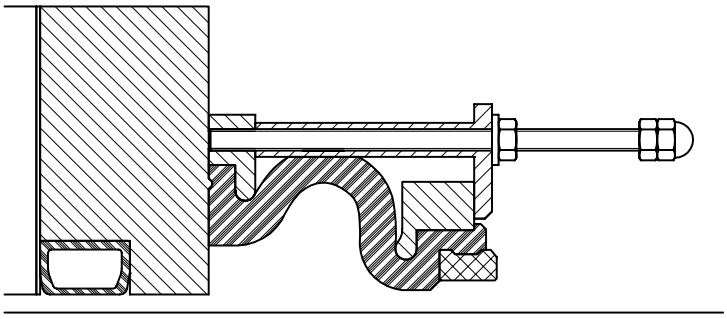

13.7.15. The Seat (6-2) now needs fitting into the seat housing (1-2) along with its sealing strip (6-3) in order to form unit "**2**" – see 13.7.2.

13.7.16. Thoroughly clean, then apply a weak soapy solution to, the recess in the seat housing (1-2).

13.7.17. Insert the sealing strip (6-3) into the recess ensuring that the radiused edge of the strip is outboard and on the inner diameter.

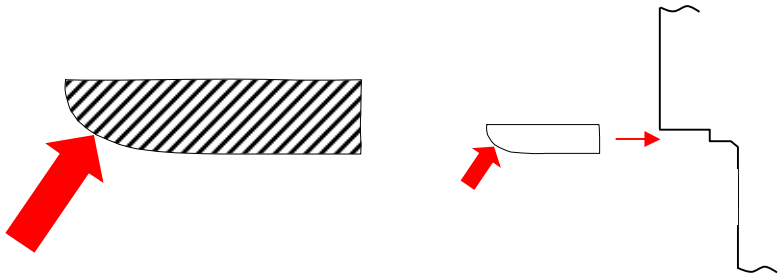

13.7.18. The Sealing Strip is provided over length (see below). To overcome the "apparent" excess length, the Strip ends should be butted together in the recess (not glued or bonded) and the excess rubber slowly worked around whilst exerting light pressure on the loop.

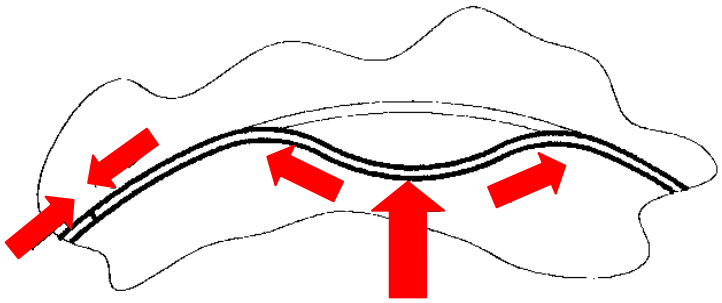

NOTE: As above, the sealing strip is supplied over length to ensure that the ends butt hard together and that the strip fully supports the seat. The sealing strip shall **not** be cut or shortened.

13.7.19. Before fitting the seat into the sealing strip, apply a coating of a weak soapy water solution to the exposed surfaces of the Sealing Strip.

13.7.20. Carefully insert the non-split Silicon Carbide Seat (6-2) into the Sealing Strip (6-3).

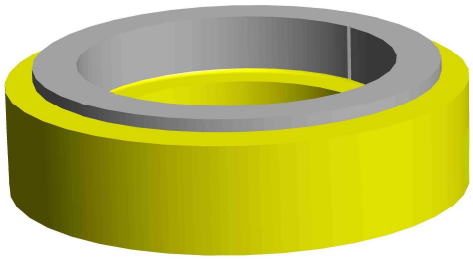

13.7.21. Ensure that the Seat (1-1) is fully inserted into the Sealing Strip (1-3).

13.7.22. The units "2" and "4", see 13.7.2., just assembled, plus the other separate components 1, 3 and 5) should now be installed over the Propeller shaft as described in Installation Section 7.5 onwards.

14. SPARE PARTS AND THEIR STORAGE

14.1. For the PSE seal, as it is basically only a 5 component assembly (adaptor plate, mounting ring, bellows, seat housing and drive clamp ring assemblies); the requirement for "spare parts" is limited.

14.2. As referenced in Section 13 (Maintenance) **none** of the components are considered to be refurbishable items.

All **non**-elastomer components that are undamaged and unworn are considered re-usable.

14.3. The components that may be held as spares are: a bellows and inflatable seal, a face, a seat, a seat sealing strip and an 'O'-cord. However due consideration must be given to the possibly lengthy storage of elastomer components. Also that the bellows and the inflatable seal can only be replaced in-situ by a Wärtsilä UK limited certified engineer with the use of a Wärtsilä UK limited hot bonding kit.

14.4. Considering the practicalities and likelihood of replacement requirement we **suggest** that spares held could be:

- Service Kit-A (Assembly – 5) For In-Situ Overhauls.
- Service Kit-B (Assembly – 6) For Workshop Overhauls.
- Service Kit-C (Assembly – 8) For In-Situ Overhauls.
- Service Kit-D (Assembly – 10) For Workshop Overhauls.

14.5. All parts held as spares, should be kept in their original packaging as they will have been inspected and packed prior to despatch as described in Section 3 (Storage and Handling).

14.6. All components must be protected from damage or deterioration by maintaining their original packing and careful storage to prevent physical damage (with special care being taken of any fine machined surfaces or critical components).

All spares should be stored flat and unobstructed in a dry, cool and dark environment, as described in Section 3.6.

15. ATTACHMENTS.

This Technical Manual [TM-PSE-04 PHASE 1 (I) – FOM] covers the following:-

- ***H76214*** Tabulated G.A. Drawing of PSE type seal – Imperial sizes.

Note: This manual is written based on the General Arrangement (GA) drawings listed on the front cover.

In all instances the drawing(s) specific to the application must be included after this attachment page and referenced in conjunction with this manual.

The attachments identified above, now follow: