NOTE

Foundation for side corridor will have 3 different assemblys. One with the Connecting plate on top (PART 8175). One with the supporting plate on top(PART 7175). One with the end plate on top (PART 6175).

Instructions for assembly in drawing (PHASE C)

Foundation for side corridor

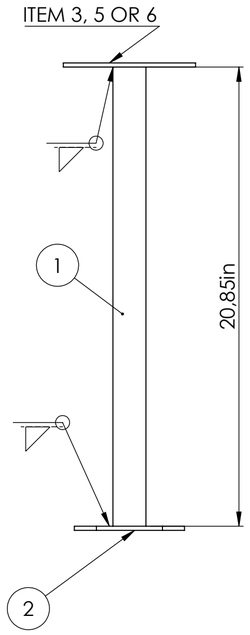

Connecting plate

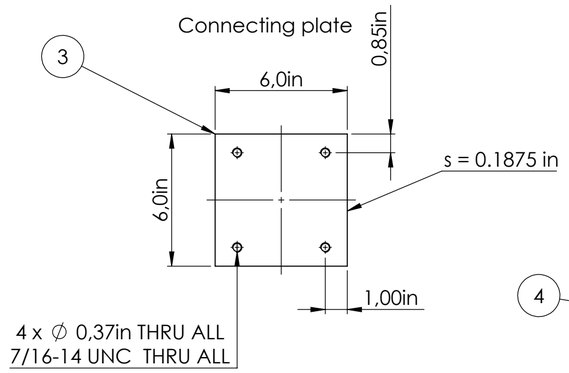

Foundation for leakage tray (PART 9175)

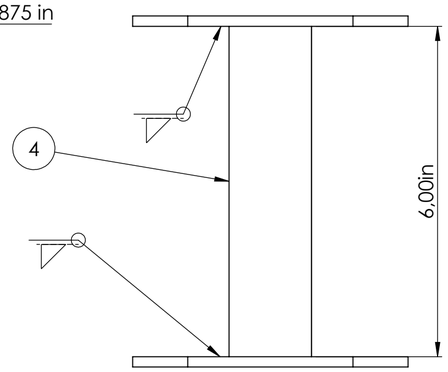

Supporting plate

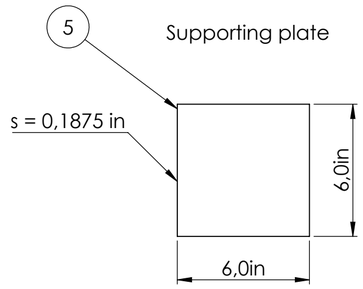

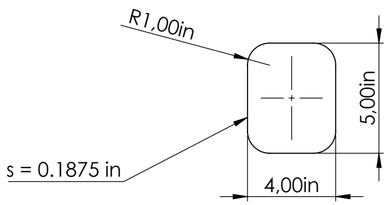

End plate

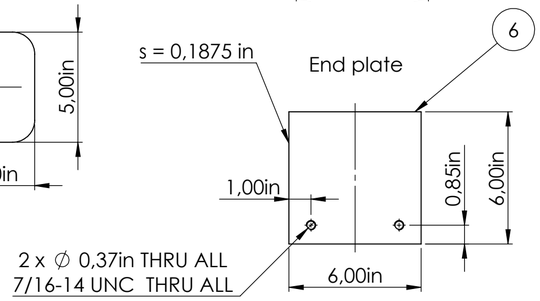

ITEM NO.	PART NUMBER	DESCRIPTION	QTY.
1	8075	ASTM A36 C3x5	22
2	8375	A611-97 Sheet Metal 2	48
3	8275	A611-97 Sheet Metal 1	8
4	1075	ASTM A36 C3x5	8
5	7275	A611-97 Sheet Metal 3	10
6	6275	A611-97 Sheet Metal 4	4
7	3075	ASTM A36 L1.75x1.75x0.25	1
8	4075	ASTM A36 L1.75x1.75x0.25	1
9	5075	ASTM A36 L1.75x1.75x0.25	1
10	2075	ASTM A36 C3x5	10

Foundation for the converter beds

AQ1 AQ2 AQ3

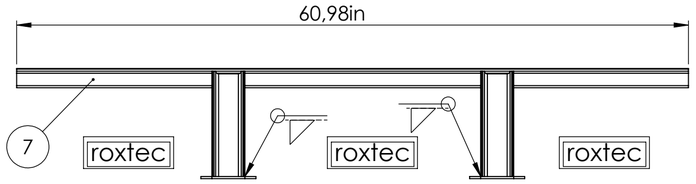

A1 A2 A3

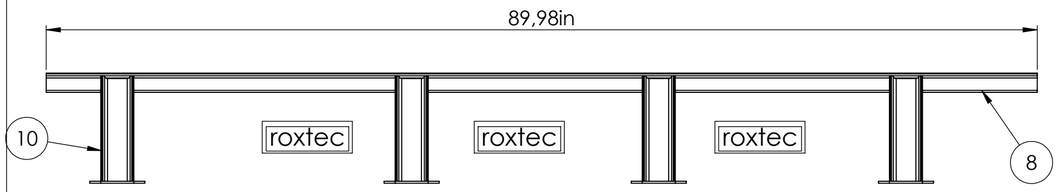

E1 R1 R2

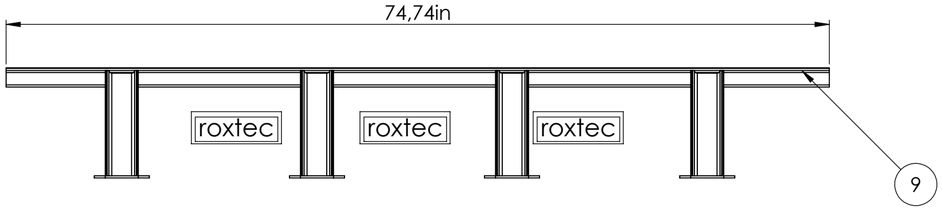

NOTE

Make a cut to the PART 2075 as seen in DETAIL A.

Cut must be made so that the both surfaces of PART 2075 are connected to PART 3075, 4075 or 5075

DETAIL A
SCALE 2 : 5

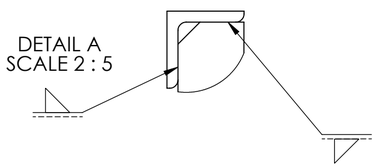

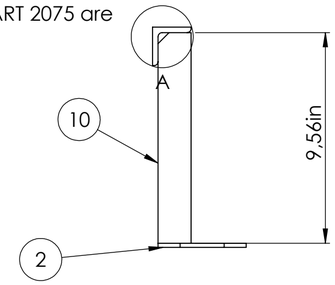

NOTE

This assembly is required to create supporting between empty spaces in converter beds.

These measurements are not final and adjust them so that the highest point of this assembly is in the same plane as the top face of the converter beds!

PART 2075 is a supporting beam and we suggest adding a support beam between each Roxtec inlet for maximium support. You can add more if you feel it necessary

Use drawing (PHASE E) as a instruction.

Suhde / Scale	1:5	Projekti / Project	CCGS ANN HARVEY
Arkkikoko / Sheet size	A2	Asiakas / Customer	ABB OY MARINE & PORTS
	Date	Name	
Suunnittelija / Designer	18.5.2018	WiSi	
Tarkastanut / Checked	18.5.2018	TuTe	
Hyväksynyt / Approved			
Otsikko / Title	FOUNDATIONS LEAKAGE TRAY		
Kok.paino / Total weight	Kg	Liittyy / Included in	PHASE C, D, F
Nro. / No.	4000116-5012	Rev.	A
Sivu / Page	1 / 1		
CAD-tunnus / CAD-code		Sijainti / Location	

REJLERS

This document shall not be presented or given to a third party without permission of REJLERS OY !

Tätä asiakirjaa ei saa ilman lupaa esittää eikä luovuttaa kolmannelle osapuolelle ilman REJLERS OY:n lupaa!