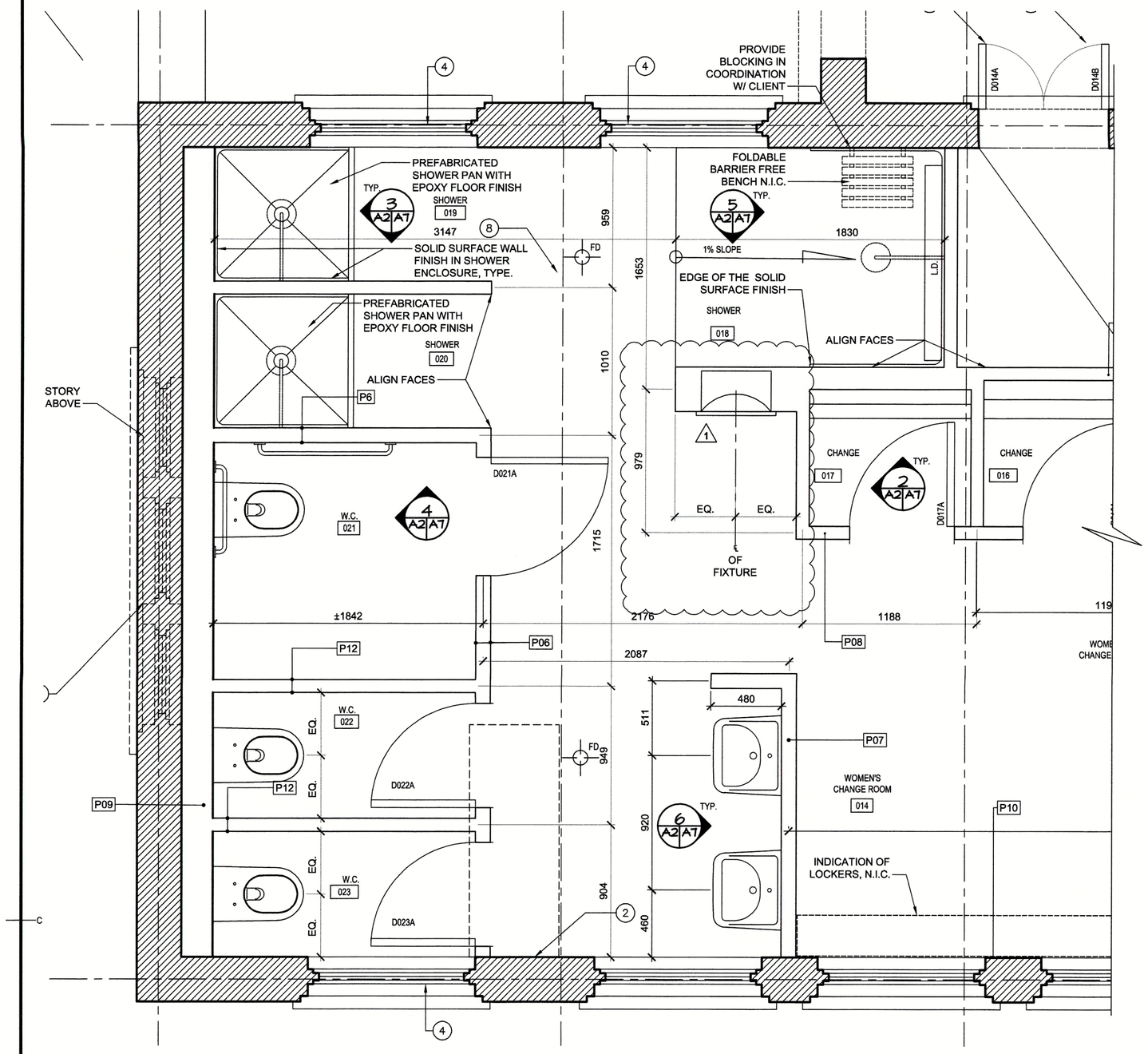

1 A2 A7 ENLARGED PLAN
SCALE : 1:20
0mm 500mm 1000mm 1500mm 2000mm 2500mm

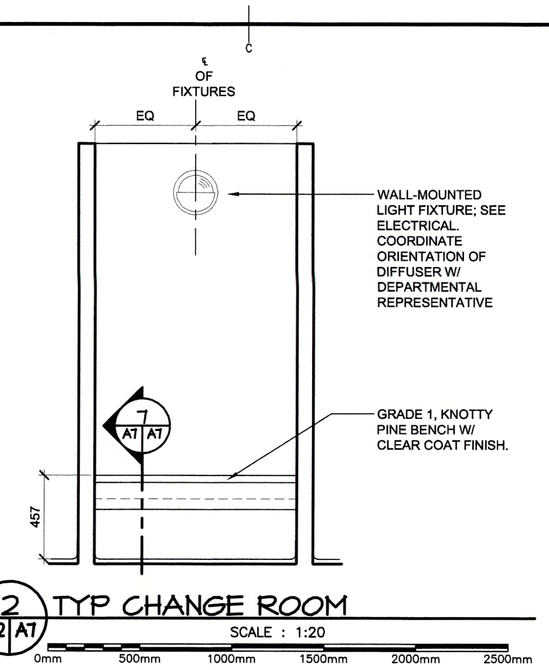

2 A2 A7 TYP CHANGE ROOM
SCALE : 1:20
0mm 500mm 1000mm 1500mm 2000mm 2500mm

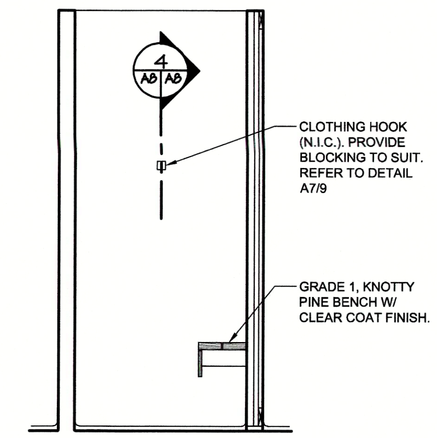

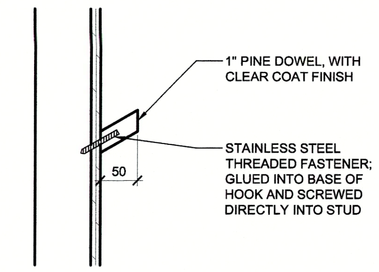

8 A7 A7 TYPICAL COAT HOOK
SCALE : 1:5
0mm 100mm 200mm 300mm 400mm 500mm

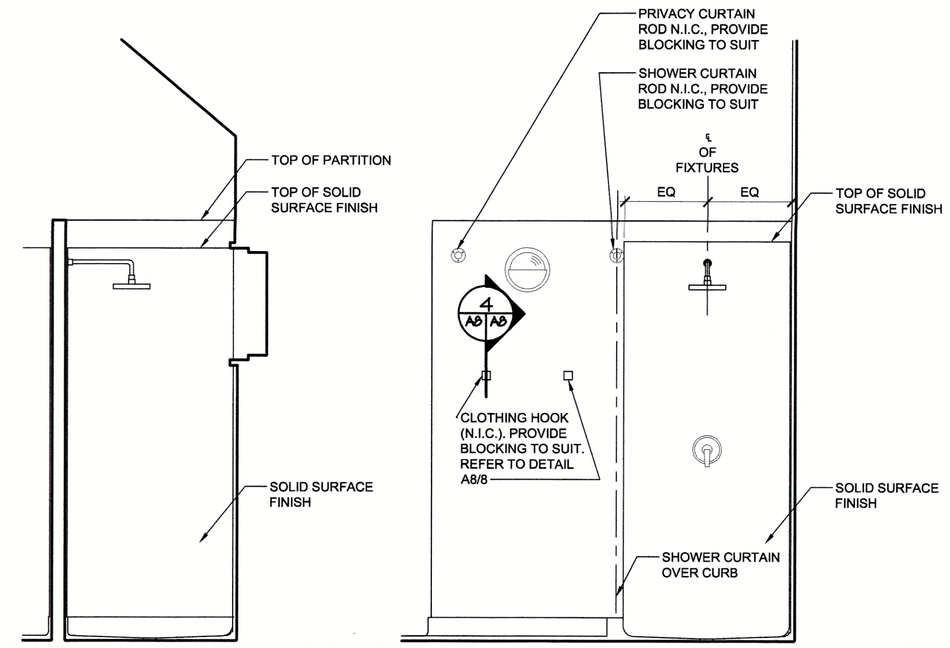

3 A2 A7 TYP SHOWER
SCALE : 1:20
0mm 500mm 1000mm 1500mm 2000mm 2500mm

NOTE: COORDINATE CHANGING ROOM 017 BENCH DEPTH WITH DOOR.

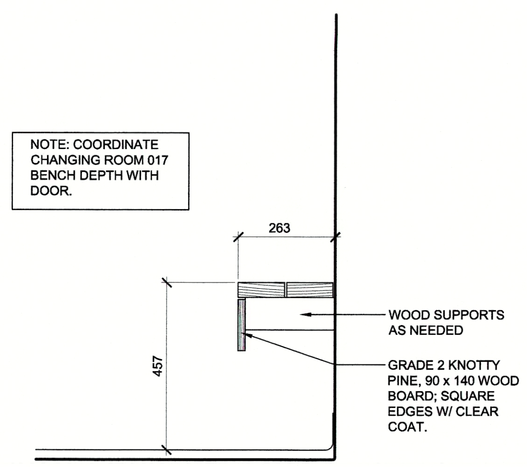

7 A7 A7 TYP CHANGE ROOM BENCH
SCALE : 1:10
0mm 100 200 300 400 500 600 700 800 900 1000mm

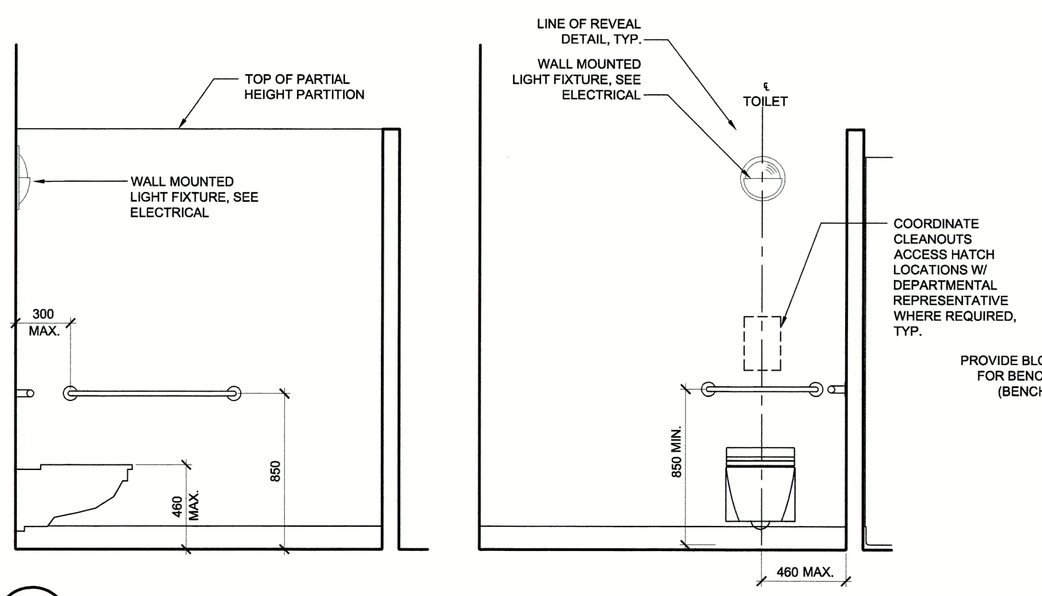

4 A2 A7 TYP FREE BARRIER TOILET
SCALE : 1:20
0mm 500mm 1000mm 1500mm 2000mm 2500mm

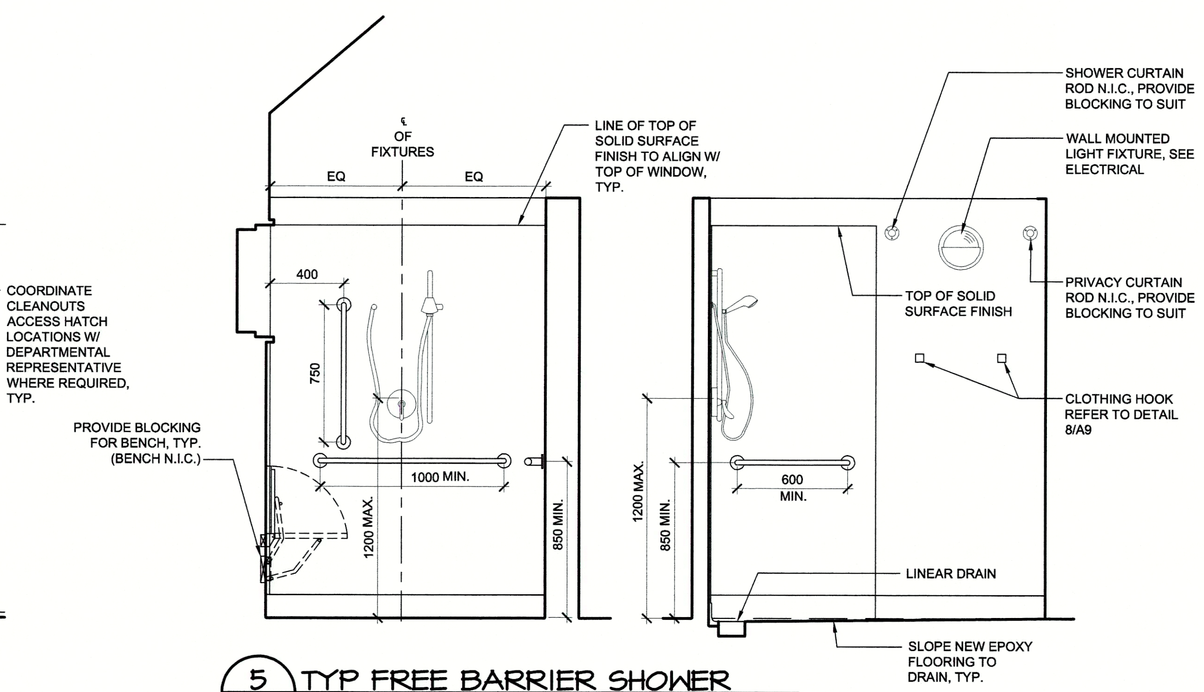

5 A2 A7 TYP FREE BARRIER SHOWER
SCALE : 1:20
0mm 500mm 1000mm 1500mm 2000mm 2500mm

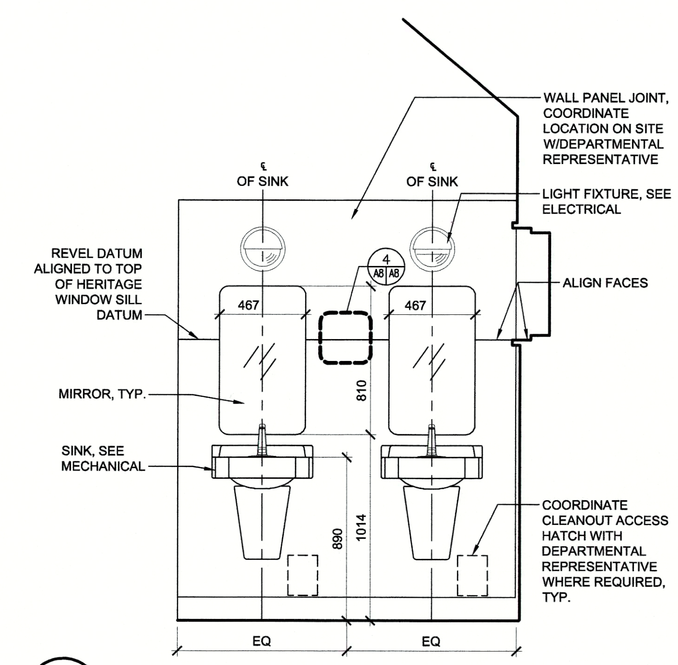

6 A2 A7 TYP SINK WALL
SCALE : 1:20
0mm 500mm 1000mm 1500mm 2000mm 2500mm

Public Works and Government Services Canada / Travaux Publics et Services gouvernementaux Canada

ARCHITECT
exp Architects Inc.
t: +1.506.646.8020 | f: +1.506.646.8025
602 Rothesay Avenue
Saint John, NB E2H 2H1
CANADA
www.exp.com

• BUILDINGS • EARTH & ENVIRONMENT • ENERGY • INDUSTRIAL • INFRASTRUCTURE • SUSTAINABILITY •

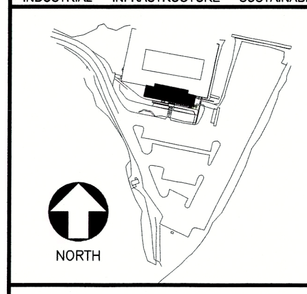

22127
CERTIFICATE of PRACTICE
Melissa J. Wakefield
exp ARCHITECTS INC.
ARCHITECTS ASSOCIATION of NEW BRUNSWICK

revisions		date
1	ADDENDUM 03	JAN.09 2020
0	ISSUED FOR TENDER	NOV.08 2019

project / projet
REHABILITATION BATH HOUSE FUNDY NATIONAL PARK ALMA, NB
ALBERT COUNTY

drawing / dessin
ENLARGED PLAN + INTERIOR ELEVATIONS

designed MJW / conçu
date
drawn BAB / dessiné
date 1/21/2019
approved / approuvé
date
Tender / Soumission
PWGSC Project Manager / Administrateur de projets TPSGC
project number / no. du projet
R.087633.001
drawing no. / no. du dessin
A-7

PWGSC B1 (2004)

E-DRM/GDD-E: 552593