Public Works and Government Services Canada | Travaux publics et Services gouvernementaux Canada

RETURN BIDS TO:
RETOURNER LES SOUMISSIONS À:

Bid Receiving - PWGSC / Réception des soumissions - TPSGC
11 Laurier St. / 11, rue Laurier
Place du Portage , Phase III
Core 0B2 / Noyau 0B2
Gatineau, Québec K1A 0S5
Bid Fax: (819) 997-9776

REQUEST FOR PROPOSAL
DEMANDE DE PROPOSITION

Proposal To: Public Works and Government Services Canada

We hereby offer to sell to Her Majesty the Queen in right of Canada, in accordance with the terms and conditions set out herein, referred to herein or attached hereto, the goods, services, and construction listed herein and on any attached sheets at the price(s) set out therefor.

Proposition aux: Travaux Publics et Services Gouvernementaux Canada

Nous offrons par la présente de vendre à Sa Majesté la Reine du chef du Canada, aux conditions énoncées ou incluses par référence dans la présente et aux annexes ci-jointes, les biens, services et construction énumérés ici sur toute feuille ci-annexée, au(x) prix indiqué(s).

Comments - Commentaires

Title - Sujet
Axial Fan Replacement

Solicitation No. - N° de l'invitation	**Date**
F2599-195064/B	2020-02-06

Client Reference No. - N° de référence du client
F2599-195064

GETS Reference No. - N° de référence de SEAG
PW-$$MD-041-27614

File No. - N° de dossier	**CCC No./N° CCC - FMS No./N° VME**
041md.F2599-195064	

Solicitation Closes - L'invitation prend fin
at - à 02:00 PM
on - le 2020-02-19

Time Zone
Fuseau horaire
Eastern Daylight Saving Time EDT

F.O.B. - F.A.B. Specified Herein - Précisé dans les présentes
Plant-Usine: ☐ **Destination:** ☐ **Other-Autre:** ☑

Address Enquiries to: - Adresser toutes questions à:	**Buyer Id - Id de l'acheteur**
Pourmand, Mastaneh	041md

Telephone No. - N° de téléphone	**FAX No. - N° de FAX**
(819) 420-5487 ( )	( ) -

Destination - of Goods, Services, and Construction:
Destination - des biens, services et construction:
DEPARTMENT OF FISHERIES AND OCEANS
CCGS SAMUEL RISLEY
CANADIAN COAST GUARD
867 Lakeshore Road
Burlington
Ontario
L7S1A1
Canada

Instructions: See Herein

Instructions: Voir aux présentes

Vendor/Firm Name and Address
Raison sociale et adresse du fournisseur/de l'entrepreneur

Delivery Required - Livraison exigée	**Delivery Offered - Livraison proposée**
See Herein	

Vendor/Firm Name and Address
Raison sociale et adresse du fournisseur/de l'entrepreneur

Telephone No. - N° de téléphone
Facsimile No. - N° de télécopieur

Name and title of person authorized to sign on behalf of Vendor/Firm (type or print)
Nom et titre de la personne autorisée à signer au nom du fournisseur/ de l'entrepreneur (taper ou écrire en caractères d'imprimerie)

Signature **Date**

Issuing Office - Bureau de distribution
Ship Refits and Conversions / Radoubss et modifications de navires and / et
11 Laurier St. / 11, rue Laurier
6C2, Place du Portage
Gatineau, Québec K1A 0S5

Canada

TABLE OF CONTENTS

PART 1 - GENERAL INFORMATION

1.1 Introduction

The bid solicitation is divided into seven parts plus attachments and annexes, as follows:

Part 1 General Information: provides a general description of the requirement;

Part 2 Bidder Instructions: provides the instructions, clauses and conditions applicable to the bid solicitation;

Part 3 Bid Preparation Instructions: provides Bidders with instructions on how to prepare their bid;

Part 4 Evaluation Procedures and Basis of Selection: indicates how the evaluation will be conducted, the evaluation criteria that must be addressed in the bid, and the basis of selection;

Part 5 Certifications and Additional Information: includes the certifications and additional information to be provided;

Part 6 Security, Financial and Other Requirements: includes specific requirements that must be addressed by Bidders; and

Part 7 Resulting Contract Clauses: includes the clauses and conditions that will apply to any resulting contract.

The Annexes include: the Requirement, Basis of Payment, Bidders Questions & Canada Answers, Bid Evaluation Criteria, Mandatory Deliverables Checklist, Insurance Requirements, and other Annexes.

1.2 Summary

1.2.1 The Canadian Coast Guard (CCG) has a requirement for purchasing Axial Fans of different sizes and operational requirements, in accordance with Annex “A” Requirement, to replace the existing ventilation systems onboard the vessel CCGS Samuel Risley – to be delivered to the Canadian Coast Guard Base in Parry Sound, Ontario.

1.2.2 There is no security requirement associated with this requirement.

1.2.3 The requirement is subject to the provisions of the World Trade Organization Agreement on Government Procurement (WTO-AGP), the North American Free Trade Agreement (NAFTA), the Canada-European Union Comprehensive Economic and Trade Agreement (CETA), and the Canadian Free Trade Agreement (CFTA).

1.3 Debriefings

Bidders may request a debriefing on the results of the bid solicitation process. Bidders should make the request to the Contracting Authority within 15 working days from receipt of the results of the bid solicitation process. The debriefing may be in writing, by telephone or in person.

PART 2 - BIDDER INSTRUCTIONS

2.1 Standard Instructions, Clauses and Conditions

All instructions, clauses and conditions identified in the bid solicitation by number, date and title are set out in the Standard Acquisition Clauses and Conditions Manual (https://buyandsell.gc.ca/policy-and-guidelines/standard-acquisition-clauses-and-conditions-manual) issued by Public Works and Government Services Canada.

Bidders who submit a bid agree to be bound by the instructions, clauses and conditions of the bid solicitation and accept the clauses and conditions of the resulting contract.

The 2003 (2019-03-04) “Standard Instructions - Goods or Services - Competitive Requirements”, are incorporated by reference into and form part of the bid solicitation. Subsection 5.4 of 2003, Standard Instructions - Goods or Services - Competitive Requirements, is amended as follows:

Delete: 60 days
Insert: 90 days

The 1031-2 (2012-07-16) “Contract Cost Principles”, are incorporated by reference into and form part of the bid solicitation.

The 4006 (2010-08-16) “Supplemental General Conditions Contractor to Own Intellectual Property Rights in Foreground Information”, are incorporated by reference into and form part of the bid solicitation.

2.1.1 *SACC* Manual Clauses

The B1000T (2014-06-26) “Condition of Material – Bid”, are incorporated by reference into and form part of the bid solicitation.

2.2 Submission of Bids

Bids must be submitted only to Public Works and Government Services Canada (PWGSC) Bid Receiving Unit by the date, time and place indicated on page 1 of the bid solicitation.

Due to the nature of the bid solicitation, bids transmitted by facsimile to PWGSC will not be accepted.

2.3 Communications - Solicitation Period

All enquiries must be submitted in writing to the Contracting Authority no later than five (5) calendar days before the bid closing date. Enquiries received after that time may not be answered.

Bidders must reference, as accurately as possible, the numbered item of the bid solicitation to which the enquiry relates. Care should be taken by Bidders to explain each question in sufficient detail in order to enable Canada to provide an accurate answer. This includes identifying the Document Name (RFP, or Annex & Appendix ID), page number, section number, subsection number, and paragraph ID pertaining to the subject of the question.

Technical enquiries that are of a proprietary nature must be clearly marked "proprietary" at each relevant item. Items identified as “proprietary” will be treated as such except where Canada determines that the enquiry is not of a proprietary nature. Canada may edit the question(s) or may request that the Bidder do so, so that the proprietary nature of the question(s) is eliminated and the enquiry can be answered to all Bidders.

Enquiries not submitted in a form that can be distributed to all Bidders may not be answered by Canada.

2.4 Applicable Laws – Bid

Any resulting contract must be interpreted and governed, and the relations between the parties determined, by the laws in force in the Province of Ontario.

Bidders may, at their discretion, substitute the applicable laws of a Canadian province or territory of their choice without affecting the validity of their bid, by deleting the name of the Canadian province or territory specified and inserting the name of the Canadian province or territory of their choice. If no change is made, it acknowledges that the applicable laws specified are acceptable to the Bidders.

2.5 Improvement of Requirement during Solicitation Period

Should bidders consider that the Specifications or the Requirement contained in this bid solicitation could be improved technically, bidders are invited to make suggestions, in writing, to the Contracting Authority named in the bid solicitation. Bidders must clearly outline the suggested improvement as well as the reason for the suggestion.

Suggestions that do not restrict the level of competition nor favour a particular bidder will be given consideration provided they are submitted to the Contracting Authority at least seven (7) calendar days before the bid closing date. Canada will have the right to accept or reject any or all suggestions.

PART 3 - BID PREPARATION INSTRUCTIONS

3.1 Bid Preparation Instructions

a) If the Bidder chooses to submit its bid electronically, Canada requests that the Bidder submits its bid in accordance with section 08 of the 2003 standard instructions. The epost Connect system has a limit of 1GB per single message posted and a limit of 20GB per conversation.

The bid must be gathered per section and separated as follows:

Section I: Technical Bid
Section II: Financial Bid
Section III: Certifications

b) If the Bidder chooses to submit its bid in hard copies, Canada requests that the Bidder submits its bid in separately bound sections as follows:

Section I: Technical Bid (one (1) hard copy), and one (1) soft copy on USB key

Section II: Financial Bid (one (1) hard copy), and one (1) soft copy on USB key

Section III: Certifications (one (1) hard copy), and one (1) soft copy on USB key

If there is a discrepancy between the wording of the soft copy on electronic media and the hard copy, the wording of the hard copy will have priority over the wording of the soft copy.

c) If the Bidder is simultaneously providing copies of its bid using multiple acceptable delivery methods, and if there is a discrepancy between the wording of any of these copies and the electronic copy provided through epost Connect service, the wording of the electronic copy provided through epost Connect service will have priority over the wording of the other copies.

Prices must appear in the financial bid only. No prices must be indicated in any other section of the bid.

Canada requests that bidders follow the format instructions described below in the preparation of hard copy of their bid:

(a) use 8.5 x 11 inch (216 mm x 279 mm) paper;

(b) use a numbering system that corresponds to the bid solicitation.

In April 2006, Canada issued a policy directing federal departments and agencies to take the necessary steps to incorporate environmental considerations into the procurement process Policy on Green Procurement (https://www.tbs-sct.gc.ca/pol/doc-eng.aspx?id=32573). To assist Canada in reaching its objectives, bidders should:

1) use 8.5 x 11 inch (216 mm x 279 mm) paper containing fibre certified as originating from a sustainably-managed forest and containing minimum 30% recycled content; and

2) use an environmentally-preferable format including black and white printing instead of colour printing, printing double sided/duplex, using staples or clips instead of cerlox, duotangs or binders.

The following interpretations and considerations apply to Bid preparation:

Signature of Proposal by Bidder

(a) Canada requires that each Proposal be signed by the Bidder or by an authorized representative of the Bidder. Bidders' proposals shall be properly signed when submitted at the bid closing.

(b) Bidders must sign their Proposals by signing the front page of this solicitation.

Cross-Referencing

Each volume of the Bidder's Proposal should be written to the greatest extent possible on a stand-alone basis so that its contents may be evaluated with minimum of cross-referencing to other volumes of the Proposal. Cross-referencing within a proposal volume is permitted where its use would conserve space without impairing clarity.

Mandatory

The mandatory requirements of the Solicitation are, unless stated otherwise, signified by the words "shall" or "must" or "will" or "is required" or by the phrase "are to" or "is to".

Each Bidder must comply with every mandatory requirement of this Solicitation. In the event any Bidder fails to comply with any mandatory requirement of this Solicitation, its Bid shall be deemed to be non-responsive and will not be given any further consideration.

Proprietary Information

All information regarding the terms and conditions, financial and technical aspects of the Bidder's Proposal, which in its opinion, are of a proprietary or confidential nature should be clearly marked "PROPRIETARY" or "CONFIDENTIAL" at the relevant clause, page or section.

Communications and Enquiries

To ensure the integrity of the competitive solicitation process, enquiries and other communications regarding the solicitation must be conducted in writing as much as possible, and **only** directed to the Contracting Authority whose name appears in this solicitation document, Part 7, section 7.5.

Section I: Technical Bid

In their technical bid, Bidders should demonstrate their understanding of the requirements contained in the bid solicitation and explain how they will meet these requirements. Bidders must demonstrate their capability in a thorough, concise and clear manner for carrying out the work.

The technical bid must address clearly and in sufficient depth the points that are subject to the evaluation criteria against which the bid will be evaluated. Simply repeating the statement contained in the bid solicitation is not sufficient. In order to facilitate the evaluation of the bid, Canada requests that Bidders address and present topics in the order of the evaluation criteria under the same headings. To avoid duplication, Bidders may refer to different sections of their bids by identifying the specific paragraph and page number where the subject topic has already been addressed.

Section II: Financial Bid

Bidders must submit their financial bid in accordance with Annex “B” – Basis of Payment.

Appendix-1 to Annex “B” provides instructions on how to complete the Table B-1: Contract Firm Price”.

The Financial Bid must not be attached to or combined within any other part of the bid and prices must not appear in any other area of the proposal other than the Financial Bid.

3.1.1 Electronic Payment of Invoices – Bid

The Bidder should complete Annex “C” Electronic Payment Instruments, to identify whether payment of invoices by Electronic Payment Instruments is acceptable, and by which method.

If Annex “C” Electronic Payment Instruments is not completed, it will be considered as if Electronic Payment Instruments are not being accepted for payment of invoices.

Acceptance of Electronic Payment Instruments will not be considered as an evaluation criterion.

3.1.2 Exchange Rate Fluctuation

1. The Bidder may request Canada to assume the risks and benefits of exchange rate fluctuations. If the Bidder claims for an exchange rate adjustment, this request must be clearly indicated in the bid at time of bidding. The Bidder must submit form PWGSC-TPSGC 450, Claim for Exchange Rate Adjustments with its bid, indicating the Foreign Currency Component (FCC) in Canadian dollars for each line item for which an exchange rate adjustment is required.
2. The FCC is defined as the portion of the price or rate that will be directly affected by exchange rate fluctuations. The FCC should include all related taxes, duties and other costs paid by the Bidder and which are to be included in the adjustment amount.
3. The total price paid by Canada on each invoice will be adjusted at the time of payment, based on the FCC and the exchange rate fluctuation provision in the contract. The exchange rate adjustment will only be applied where the exchange rate fluctuation is greater than 2% (increase or decrease).
4. At time of bidding, the Bidder must complete columns (1) to (4) on form PWGSC-TPSGC 450, for each line item where they want to invoke the exchange rate fluctuation provision. Where bids are evaluated in Canadian dollars, the dollar values provided in column (3) should also be in Canadian dollars, so that the adjustment amount is in the same currency as the payment.
5. Alternate rates or calculations proposed by the Bidder will not be accepted for the purposes of this exchange rate fluctuation provision.

Section III: Certifications

Bidders must submit the certifications and additional information required under Part 5.

PART 4 - EVALUATION PROCEDURES AND BASIS OF SELECTION

4.1 Evaluation Procedures

1. Bids will be assessed in accordance with the entire requirement of the bid solicitation including the technical, and financial evaluation criteria.
2. An evaluation team composed of representatives of Canada will evaluate the bids.
3. Bids must be deemed valid and complete to be considered for evaluation process.
4. The evaluation team reserves the right, but is not obliged, to seek clarification or verify any or all information provided by the Bidder with respect to this solicitation.

4.1.1 Technical Evaluation

The technical evaluation is based on mandatory and point rated evaluation criteria, as detailed in Annex “L” – Bid Evaluation Criteria.

In order to ensure that Bidders provide all the required information, the Checklist of Mandatory Deliverables, Table H-1, is provided in Annex “H” to guide the Bidders in the completion of their Bids. *Bidders must complete and include Table L-1 “Mandatory Technical Criteria” and Table H-1 with their bids*.

Canada intends to use the completed Tables L-1 and H-1 to verify the required technical information has been provided and meet the requirements. In order to substantiate their compliance to each criterion, the Bidder should refer to the supporting documents within their Technical Bid, with the exact page number(s) and paragraph number(s) where the required substantiation can be found.

4.1.1.1 Mandatory Technical Criteria

Bids must meet the mandatory technical criteria detailed in Annex “L” – Bid Evaluation Criteria. The bidder must provide the necessary documentation to support compliance with this requirement.

The mandatory criteria are evaluated on a simple pass/fail basis. Bids that fail to meet the mandatory technical criteria shall be declared non-responsive and no further consideration shall be given. Only bids that have met the mandatory criteria are subject to point-rated technical evaluation.

4.1.1.2 Point-Rated Technical Criteria

In order to be declared responsive, and eligible to proceed to financial evaluation, Bidder's proposal having met all mandatory requirements, must, to the satisfaction of Canada, obtain a minimum score of 60 on each individual mandatory criterion, and a minimum overall passing points of 720 for the entire technical evaluation criteria.

4.1.2 Financial Evaluation

Bidder must provide the firm bid prices for each item of the “Work” as detailed in Annex “B” – Basis of Payment, and complete all blanks in every section of Annex “B”.

The price of the bid will be evaluated in Canadian dollars.

4.1.2.1 Evaluation of Price - Canadian / Foreign Bidders

1. The price of the bid will be evaluated as follows:

    a. Canadian-based bidders must submit firm prices, Canadian customs duties and excise taxes included, and Applicable Taxes excluded.

    b. Foreign-based bidders must submit firm prices, Canadian customs duties, excise taxes and Applicable Taxes excluded. Canadian customs duties and excise taxes payable by Canada will be added, for evaluation purposes only, to the prices submitted by foreign-based bidders.

2. Unless the bid solicitation specifically requires bids to be submitted in Canadian currency, bids submitted in foreign currency will be converted to Canadian currency for evaluation purposes. The rate given by the Bank of Canada in effect on the bid solicitation closing date, or on another date specified in the bid solicitation, will be applied as a conversion factor to the bids submitted in foreign currency.

3. Canada requests that bidders provide prices Delivered Duty Paid (DDP) destination. Bids will be assessed on the basis of DDP destination.

4. For the purpose of the bid solicitation, bidders with an address in Canada are considered Canadian-based bidders and bidders with an address outside of Canada are considered foreign-based bidders.

4.2 Basis of Selection

4.2.1 Basis of Selection – Lowest Price Per Point

1. To be declared responsive, a bid must:

    a. Comply with all the requirements of the bid solicitation;

    b. Meet all mandatory technical evaluation criteria; and

    c. Obtain the required minimum of 720 points overall for the technical evaluation criteria which are subject to point rating. The rating is performed on a scale of 960 points.

2. Bids not meeting (a) or (b) or (c) will be declared non-responsive. Neither the responsive bid that receives the highest number of points nor the one that proposed the lowest price will necessarily be accepted. The responsive bid with the lowest evaluated price per point will be recommended for award of a contract.

Example of Basis of Selection based on lowest cost-per-point, is provided in Annex L, under Section 2 – Financial Bid Evaluation & Bidder Selection.

PART 5 – CERTIFICATIONS AND ADDITIONAL INFORMATION

Bidders must provide the required certifications and additional information to be awarded a contract.

The certifications provided by Bidders to Canada are subject to verification by Canada at all times. Unless specified otherwise, Canada will declare a bid non-responsive, or will declare a contractor in default if any certification made by the Bidder is found to be untrue, whether made knowingly or unknowingly, during the bid evaluation period or during the contract period.

The Contracting Authority will have the right to ask for additional information to verify the Bidder's certifications. Failure to comply and to cooperate with any request or requirement imposed by the Contracting Authority will render the bid non-responsive or constitute a default under the Contract.

5.1 Certifications Required with the Bid

Bidders must submit the following duly completed certifications as part of their bid.

Compliance with the certifications bidders provide to Canada is subject to verification by Canada during the bid evaluation period (before award of a contract) and after contract award. The Contracting Authority will have the right to ask for additional information to verify bidders' compliance with the certifications before award of a contract.

The bid will be declared non-responsive if any certification made by the Bidder is untrue, whether made knowingly or unknowingly. Failure to comply with the certifications or to comply with the request of the Contracting Authority for additional information will also render the bid non-responsive.

5.1.1 Integrity Provisions - Declaration of Convicted Offences

In accordance with the Integrity Provisions of the Standard Instructions, all bidders must provide with their bid, **if applicable**, the Integrity declaration form available on the Forms for the Integrity Regime website (http://www.tpsgc-pwgsc.gc.ca/ci-if/declaration-eng.html), to be given further consideration in the procurement process.

5.2 Certifications Precedent to Contract Award and Additional Information

The certifications and additional information listed below should be submitted with the bid but may be submitted afterwards. If any of these required certifications or additional information is not completed and submitted as requested, the Contracting Authority will inform the Bidder of a time frame within which to provide the information. Failure to provide the certifications or the additional information listed below within the time frame specified will render the bid non-responsive.

5.2.1 Integrity Provisions – Required Documentation

In accordance with the section titled Information to be provided when bidding, contracting or entering into a real property agreement of the Ineligibility and Suspension Policy (http://www.tpsgc-pwgsc.gc.ca/ci-if/politique-policy-eng.html), the Bidder must provide the required documentation, as applicable, to be given further consideration in the procurement process.

Bidder must complete Annex “D” – Integrity Provisions – Associated Form as follows:

- Bidders who are incorporated, including those bidding as a joint venture, must provide a complete list of all names of all individuals who are currently directors of the Bidder.
- Bidders bidding as sole proprietorship, as well as those bidding as a joint venture, must provide the name of the owner(s).
- Bidders bidding as societies, firms or partnerships do not need to provide lists of names.

PART 6 - SECURITY, FINANCIAL AND OTHER REQUIREMENTS

6.1 Security Requirements

There are no specific security requirements applicable to this Contract.

6.2 Insurance Requirements – Proof of Availability Prior to Contract Award

The Bidder must provide a letter from an insurance broker or an insurance company licensed to operate in Canada stating that the Bidder, if awarded a contract as a result of the bid solicitation, can be insured in accordance with the Insurance Requirements specified in Annex “E” – Insurance Requirements.

If the information is not provided in the bid, the Contracting Authority will so inform the Bidder and provide the Bidder with a time frame within which to meet the requirement. Failure to comply with the request of the Contracting Authority and meet the requirement within that time period will render the bid non-responsive.

6.3 Deliverables after Contract Award

For details refer to Annex “H”, Table – H2, Required Deliverable Documentation after Contract Award.

PART 7 - RESULTING CONTRACT CLAUSES

The following clauses and conditions apply to and form part of any contract resulting from the bid solicitation.

7.1 Requirement

The Contractor must provide the Canadian Coast Guard (CCG) with Axial Fans of different sizes and operational requirements, related accessories, and documentation in accordance with the Requirement at Annex "A", and the Contractor's bid entitled _____, dated _____ – that includes any and all amendments to the Requirement aroused from Bidders' Questions and Canada Answers.

The Contractor must provide the required equipment in such manner to have a minimum service life expectancy of seven (7) years, and can be supported by well-established distributors within Canada.

The Contractor's Bid is included in Annex "I".

7.2 Standard Clauses and Conditions

All clauses and conditions identified in the Contract by number, date and title are set out in the Standard Acquisition Clauses and Conditions Manual (https://buyandsell.gc.ca/policy-and-guidelines/standard-acquisition-clauses-and-conditions-manual) issued by Public Works and Government Services Canada.

7.2.1 General Conditions

The 2030 (2018-06-21), General Conditions - Higher Complexity - Goods, apply to and form part of the Contract.

The 1031-2 (2012-07-16) "Contract Cost Principles", apply to and form part of the Contract.

7.2.2 Supplemental General Conditions & Other Applicable Clauses

The 4006 (2010-08-16) "Supplemental General Conditions Contractor to Own Intellectual Property Rights in Foreground Information", apply to and form part of the Contract.

The B7500C (2006-06-16) "Excess Goods", apply to and form part of the Contract.

The D9002C (2007-11-30) "Incomplete Assemblies", apply to and form part of the Contract.

7.3 Security Requirements

There is no security requirement applicable to the Contract.

7.4 Terms of Contract

7.4.1 Period of the Contract

The period of the Contract is from date of Contract to May 27, 2020 inclusive.

7.4.2 Delivery Date

All the deliverables must be received on or before May 27, 2020.

7.4.3 Delivery Points

Delivery of the requirement, including all related documentation, must be made to the delivery point below:

CCGS Samuel Risley
Canadian Coast Guard Base
28 Waubeek Street
Parry Sound, Ontario, Canada,
P2A 1B9

The delivery method shall be DDP (Delivered Duty Paid) Parry Sound, Ontario, in accordance with Incoterms 2010.

The Contractor must liaise with CCG Base to coordinate the reception, final inspection and unloading of the fans at time of delivery.

7.5 Authorities

7.5.1 Contracting Authority

The Contracting Authority for the Contract is:

Name: Mastaneh Pourmand
Title: Supply Specialist
Organization: Public Works and Government Services Canada, Acquisitions Branch
Directorate: Marine Systems
Address: Place du Portage, Phase III – 6C2, 11 Laurier Street, Gatineau, QC K1A 0S5
Telephone: 819-420-5487
Mobile: 343-543-2874
E-mail address: Mastaneh.pourmand@tpsgc-pwgsc.gc.ca

The Contracting Authority is responsible for the management of the Contract and any changes to the Contract must be authorized in writing by the Contracting Authority. The Contractor must not perform work in excess of or outside the scope of the Contract based on verbal or written requests or instructions from anybody other than the Contracting Authority.

7.5.2 Procurement Authority

The Procurement Authority for the Contract is:

Name: _____
Title: _____
Organization: _____
Address: _____
Telephone: _____
Mobile: _____
E-mail address: _____

The Procurement Authority (PA) is the representative of the department or agency for whom the Work is being carried out under the Contract. The PA is responsible for the implementation of tools and processes required for the administration of the Contract. The Contractor may discuss administrative matters identified in the Contract with the PA; however the PA has no authority to authorize changes to the scope of the Work. Changes to the Scope of Work can only be made through a contract amendment issued by the Contracting Authority.

7.5.3 Technical Authority

The Technical Authority for the Contract is:

Name: _____
Title: _____
Organization: _____
Address: _____
Telephone: _____
Mobile: _____
E-mail address: _____

The Technical Authority (TA) named above is the representative of the department or agency for whom the Work is being carried out under the Contract and is responsible for all matters concerning the technical content of the Work under the Contract. Technical matters may be discussed with the TA, however the TA has no authority to authorize changes to the scope of the Work. Changes to the scope of the Work can only be made through a contract amendment issued by the Contracting Authority.

7.5.4 Contractor's Representative

The Contractor’s representative is:

Name: _____
Title: _____
Organization: _____
Address: _____
Telephone: _____
Mobile: _____
E-mail address: _____

7.6 Payment

7.6.1 Basis of Payment

In consideration of the Contractor satisfactorily completing all of its obligations under the Contract, the Contractor will be paid a firm price as specified in Annex "B" – Basis of Payment, for a total cost of $_____ in Canadian Dollars *(to be completed upon Contract Award)*. Customs duties are included; Transportation and Applicable Taxes are extra.

Canada will not pay the Contractor for any design changes, modifications or interpretations of the Work, unless they have been approved, in writing, by the Contracting Authority before their incorporation into the Work.

7.6.2 Transportation Cost

The Contractor must ship the goods prepaid via DDP (Incoterms 2010) including all delivery charges to and from Parry Sound, Ontario, Canada. Prepaid transportation costs must be shown as a separate item on the invoice, supported by a certified copy of the prepaid transportation bill of lading.

7.6.3 Method of Payment – Single Payment

Canada will pay the Contractor upon completion and delivery of the Work in accordance with the payment provisions of the Contract if:

a. An accurate and complete invoice and any other documents required by the Contract have been submitted in accordance with the invoicing instructions provided in the Contract;
b. All such documents have been verified by Canada;
c. The Work delivered has been accepted by Canada.

7.6.4 Applicable SACC Manuals Clauses

SACC Manual Clause C2000C (2007-11-30) "Taxes - Foreign-based Contractor", apply to and form part of the Contract.

7.6.5 Electronic Payment of Invoices – Contract

The Contractor accepts to be paid using any of the following Electronic Payment Instrument(s): *(To be completed upon Contract Award)*

a. Visa Acquisition Card;
b. MasterCard Acquisition Card;
c. Direct Deposit (Domestic and International);
d. Electronic Data Interchange (EDI);
e. Wire Transfer (International Only).

7.6.6 Invoicing Instructions

The Contractor must submit invoices in accordance with the section entitled "Invoice Submission" of the general conditions. Invoices cannot be submitted until all work identified in the invoice is completed.

1. Each invoice must be supported by:
   a. A copy of the release document and any other documents as specified in the Contract;
   b. A copy of the invoices, receipts, and vouchers for all direct expenses if applicable
   c. Details of item(s) including Description of item(s), work order numbers;
2. Invoices must be distributed as follows:
   a. The original and one (1) copy must be forwarded to the following address for certification and payment.

      Name of Organization: _____ *(to be completed upon Contract Award)*
      Address: _____ *(to be completed upon Contract Award)*

   b. One (1) copy must be forwarded to the Contracting Authority identified under the section entitled "Authorities" of the Contract.

7.7 Certifications and Additional Information

7.7.1 Compliance

Unless specified otherwise, the continuous compliance with the certifications provided by the Contractor in its bid or precedent to contract award, and the ongoing cooperation in providing additional information are conditions of the Contract and failure to comply will constitute the Contractor in default. Certifications are subject to verification by Canada during the entire period of the Contract.

7.8 Applicable Laws

The Contract must be interpreted and governed, and the relations between the parties determined, by the laws in force in the province of Ontario.

7.9 Priority of Documents

If there is a discrepancy between the wording of any documents that appear on the list, the wording of the document that first appears on the list has priority over the wording of any document that subsequently appears on the list.

(a) The Articles of Agreement – including all its amendments;

(b) The general conditions 2030 (2018-06-21) “General Conditions - Higher Complexity – Goods”;

(c) The supplemental general conditions 1031-2 (2012-07-16) “Contract Cost Principles”

(d) Annex “J” Bidders Questions and Canada Answers

(e) Annex “A”, Requirement;

(f) Annex “B”, Basis of Payment;

(g) Annex “E”, Insurance Requirements;

(h) Annex “F”, Quality Control and Inspection

(i) Annex “G”, Warranty Procedures and Warranty Claim Form

(j) Annex “I”, Contractor's Bid dated _____, *and Bid Clarifications or amendments (If the bid was clarified or amended, insert at the time of contract award:) "as clarified on _____" or ",as amended on _____".*

7.10 Insurance Requirements

The Contractor must comply with the insurance requirements specified in Annex “E”. The Contractor must maintain the required insurance coverage for the duration of the Contract. Compliance with the insurance requirements does not release the Contractor from or reduce its liability under the Contract.

The Contractor is responsible for deciding if additional insurance coverage is necessary to fulfill its obligation under the Contract and to ensure compliance with any applicable law. Any additional insurance coverage is at the Contractor's expense, and for its own benefit and protection.

The Contractor must forward to the Contracting Authority within ten (10) days after the date of award of the Contract, a Certificate of Insurance evidencing the insurance coverage and confirming that the insurance policy complying with the requirements is in force. For Canadian-based Contractors, coverage must be placed with an Insurer licensed to carry out business in Canada, however, for Foreign-based Contractors, coverage must be placed with an Insurer with an A.M. Best Rating no less than “A-”. The Contractor must, if requested by the Contracting Authority, forward to Canada a certified true copy of all applicable insurance policies.

7.11 Lien - Section 427 of the Bank Act

SACC Manual Clause H4500C (2010-01-11) “Lien - Section 427 of the Bank Act”, apply to and form part of the Contract.

7.12 Shipping Instructions

Goods must be consigned to the destination specified in the Contract, in section 4.2 “Delivery Points” – Delivered Duty Paid (DDP) in accordance with Incoterm 2010”.

7.13 Packaging and Preparation for Delivery

All components must be properly packaged to avoid damage and ensure safe delivery at destination.

Items must be packed in weather resistant packing within closed wooden shipping crates suitable for handling, loading, transportation and long term storage of the fans in their upright position. All packaged fans and their accessories must be properly identified and tagged.

Wooden crates must be constructed to allow the crates to be easily lifted with slings under the crate body without causing any damage to the crate. The crates must be built to prevent distortion of the Equipment.

7.13.1 Applicable SACC Manual

SACC Manual D2025C (2017-08-17) “Wood packaging materials”, apply to and form part of the Contract.

7.14 Quality Assurance

7.14.1 Quality Management Systems

In the performance of the Work described in the Contract, the Contractor must comply with the requirements of ISO 9001:2008 - Quality management systems - Requirements, published by the International Organization for Standardization (ISO), current edition at date of the Contractor's Quotation.

It is not intended that the Contractor be registered to ISO 9001; however, the Contractor's quality management system must address all requirements appropriate to the scope of the Work. Only exclusions in accordance with clause A.5 and 4.3 of ISO 9001 are acceptable.

7.14.2 Parts and Components Catalogue

The Contractor must provide to the Technical Authority with two (2) paper copies and two (2) soft copies in PDF format, the catalogue of all the parts and components, required to maintain systems, with unit prices. The unit prices must not be in excess of the lowest prices charged anyone else, including the Contractor’s most favoured customer, for the like quality and quantity of the goods.

7.14.3 Applicable SACC Manuals Related to Quality Assurance and Control

SACC Manual D5505C (2007-11-30) “Quality Assurance Document”, apply to and form part of the Contract.

7.14.4 Equipment / Systems Inspection and Tests

Inspections, and tests of equipment, machinery and systems must be conducted in accordance with the Requirements. The Contractor is responsible for performing, or having performed, all inspections, and tests necessary to substantiate that the materiel and equipment provided do conform to the contract requirements.

All reports, deliverable items, documents, goods and all services rendered under the Contract are subject to inspection by the Inspection Authority. Should any report, document, good or service not be in accordance with the Requirements, and to the satisfaction of the Inspection Authority, as submitted, the Inspection Authority has the right to reject it, or require its correction at the sole expense of the Contractor before recommending payment.

For details refer to Annex “F” - Quality Control / Inspection.

7.15 Documentation

The Contractor must ensure that all purchased materiel or services conform to the contract requirements. When evidence of conformance depends solely on inspection performed by the Contractor, the Contractor is responsible to ensure that such evidence is satisfactory. Records of such inspection must form part of the required Contractor records.

The Contractor must maintain records of all inspections performed to substantiate conformance to contract requirements.

The required documentation, as part of the Scope of Supply, are detailed in Annex “A”, and Annex “L” Technical Evaluation Criteria Tables L-1, and Annex “H”, Tables H-1 and H-2.

7.15.1 Permits, Licenses and Certificates

The Contractor must obtain and maintain all permits, licenses and certificates of approval required for the work to be performed under any applicable federal, provincial or municipal legislation. The Contractor is responsible for any charges imposed by such legislation or regulations. Upon request, the Contractor must provide a copy of any such permit, license or certificate to the Contracting Authority.

7.15.2 Export Licenses

Where material is to be imported into Canada, the Contractor is responsible for obtaining all necessary export licenses from the country of origin in sufficient time to enable the export.

7.16 Failure to Deliver

Time is of the essence for the Contract. It is essential that the Work be delivered within or at the time stated in the Contract. Changes in the Completion date, not caused by Canada are Contractor defaults, will prejudice Canada and are at the Contractor's expense. The Completion

date will not be extended without consideration being provided by the Contractor that is acceptable to Canada in the form of adjustment to the price, warranty or services to be provided.

7.17 Warranty

1. Despite inspection and acceptance of the Work by or on behalf of Canada and without restricting any other provision of the Contract or any condition, warranty or provision imposed by law, the Contractor warrants that, for twelve (12) months from the date when Parts were placed in Service or (18) months from the date of delivery, whichever occurs later, the Part will be free from all defects in design, material or workmanship, and will conform to the requirements of the Contract.

2. In the event of a defect or non-conformance in any part of the Work during the warranty period, the Contractor, at the request of Canada to do so, must as soon as possible repair, replace or otherwise make good at its own option and expense the part of the Work found to be defective or not in conformance with the requirements of the Contract.

3. The Work or any part of the Work found to be defective or non-conforming will be returned to the Contractor's plant for replacement, repair or making good. However, when in the opinion of Canada it is not expedient to remove the Work from its location, the Contractor must carry out any necessary repair or making good of the Work at that location. In such cases, the Contractor will be paid the fair and reasonable Cost (including reasonable travel and living expenses) incurred in so doing, with no allowance for profit, less an amount equal to the Cost of rectifying the defect or non-conformance at the Contractor's plant.

4. Canada must pay the transportation cost associated with returning the Work or any part of the Work to the Contractor's plant pursuant to subsection 3. The Contractor must pay the transportation cost associated with forwarding the replacement or returning the Work or part of the Work when rectified to the delivery point specified in the Contract or to another location directed by Canada.

5. The Contractor must remedy all data and reports pertaining to any correction or replacement under this section, including revisions and updating of all affected data, manuals, publications, software and drawings called for under the Contract, at no cost to Canada.

6. If the Contractor fails to fulfill any obligation described in this section within a reasonable time of receiving a notice, Canada will have the right to remedy or to have remedied the defective or nonconforming work at the Contractor's expense. If Canada does not wish to correct or replace the defective or non-conforming work, an equitable reduction will be made in the Contract Price.

7. The warranty period is automatically extended by the duration of any period or periods where the Work is unavailable for use or cannot be used because of a defect or non-conformance during the original warranty period. The warranty applies to any part of the Work repaired, replaced or otherwise made good pursuant to subsection 2, for the greater of:

a. the warranty period remaining, including the extension, or

b. ninety (90) days or such other period as may be specified for that purpose by agreement between the Parties.

8. If Canada not to have the defective Work repaired or replaced at the Contractor's facility, then:

   a. the Contractor must replace or make good the defective Work at such location as the Contracting Authority may specify and Canada will pay the actual Cost incurred in so doing (including reasonable traveling and living expenses) with no allowance by way of overhead or profit, less a sum equivalent to the Cost of making good the defective Work had it been made good at the Contractor's facility; or

   b. at Canada's option, Canada may have the defective Work repaired or replaced elsewhere, and the Contractor must pay Canada such sums as are equivalent to the Cost of supplying the necessary part or parts and doing the Work at the Contractor's facility.

9. The Contractor must transfer to Canada all warranties on work supplied or held by the Contractor which exceed the warranty period indicated above, and the Contractor must exercise any such rights and warranties on behalf of Canada.

10. All claims by Canada pursuant to this section will be made in accordance with the Warranty Claim detailed in Annex “G”.

ANNEX “A”

REQUIREMENT

Annex “A” is provided as a separate Attachment at the end of this Solicitation Document.

ANNEX "B"

BASIS OF PAYMENT

The Contractor will be paid in **Canadian dollars**, based on the Price Table below, for the delivery of acceptable scope of supply including all documentation, as specified in Annex "A" – Requirement, and Annex L, Tables L1 and L2.

Table B-1: Contract Firm Price

Line Item	Description	Part No. and OEM Name	QTY	Status	Unit Price ($CAD)	Extended Price ($)
1.0	Engine Room Supply Fans - ID: SF-7 and SF-8		2	Included	$	$
1.1	Vibration Isolators per fan			Included		
1.2	Mounting Feet per fan					
1.3	Mounting Plates per fan					
1.4	Inlet Cone per fan					
1.5	Inlet Guide Vane per fan					
1.6	Documentation		1 Set	Included		
2.0	Engine Room Exhaust Fans - ID: EF-7 and EF-8		2	Included	$	$
2.1	Vibration Isolators per fan			Included		
2.2	Mounting Feet per fan					
2.3	Mounting Plates per fan					
2.4	Inlet Cone per fan					
2.5	Inlet Guide Vane per fan					
2.6	Documentation		1 Set	Included		
3.0	ME Supply Fans - ID: SF-5 and SF-6		2	Included	$	$
3.1	Vibration Isolators per fan			Included		
3.2	Mounting Feet per fan					
3.3	Mounting Plates per fan					
3.4	Inlet Cone per fan					
3.5	Inlet Guide Vane per fan					
3.6	Documentation		1 Set	Included		
4.0	Main Deck Supply Fan - ID: SF-3		1	Included	$	$
4.1	Vibration Isolators per fan			Included		
4.2	Mounting Feet per fan					

Line Item	Description	Part No. and OEM Name	QTY	Status	Unit Price ($CAD)	Extended Price ($)
4.3	Mounting Plates per fan					
4.4	Inlet Cone per fan					
4.5	Inlet Guide Vane per fan					
4.6	Documentation		1 Set	Included		
5.0	Boat Deck Supply Fan - ID: SF-2		1	Included	$	$
5.1	Vibration Isolators per fan			Included		
5.2	Mounting Feet per fan					
5.3	Mounting Plates per fan					
5.4	Inlet Cone per fan					
5.5	Inlet Guide Vane per fan					
5.6	Documentation		1 Set	Included		
6.0	Emergency Generator Supply Fan - ID: SF-9		1	Included	$	$
6.1	Vibration Isolators per fan			Included		
6.2	Mounting Feet per fan					
6.3	Mounting Plates per fan					
6.4	Inlet Cone per fan					
6.5	Inlet Guide Vane per fan					
6.6	Documentation		1 Set	Included		
7.0	Foscule Deck Supply Fan - ID: SF-9		1	Included	$	$
7.1	Vibration Isolators per fan			Included		
7.2	Mounting Feet per fan					
7.3	Mounting Plates per fan					
7.4	Inlet Cone per fan					
7.5	Inlet Guide Vane per fan					
7.6	Documentation		1 Set	Included		
8.0	Galley Exhaust Fan - ID: EF-2		1	Included	$	$
8.1	Vibration Isolators per fan			Included		
8.2	Mounting Feet per fan					
8.3	Mounting Plates per fan					
8.4	Inlet Cone per fan					
8.5	Inlet Guide Vane per fan					

Line Item	Description	Part No. and OEM Name	QTY	Status	Unit Price ($CAD)	Extended Price ($)
8.6	Documentation		1 Set	Included		
9.0	Deck Workshop Exhaust Fan - ID: EF-6 (or 6.1 & 2)			Included	$	$
9.1	Vibration Isolators per fan			Included		
9.2	Mounting Feet per fan					
9.3	Mounting Plates per fan					
9.4	Inlet Cone per fan					
9.5	Inlet Guide Vane per fan					
9.6	Documentation		1 Set	Included		
10.0	MCR Supply Fan - ID: SF-4		1	Included	$	$
10.1	Vibration Isolators per fan			Included		
10.2	Mounting Feet per fan					
10.3	Mounting Plates per fan					
10.4	Inlet Cone per fan					
10.5	Inlet Guide Vane per fan					
10.6	Documentation		1 Set	Included		
11.0	Toilet Exhaust Fan - ID: EF-4		1	Included	$	$
11.1	Vibration Isolators per fan			Included		
11.2	Mounting Feet per fan					
11.3	Mounting Plates per fan					
11.4	Inlet Cone per fan					
11.5	Inlet Guide Vane per fan					
11.6	Documentation		1 Set	Included		
12.0	Dry Store Exhaust Fan - ID: EF-3 (or 3.1 & 2)			Included	$	$
12.1	Vibration Isolators per fan			Included		
12.2	Mounting Feet per fan					
12.3	Mounting Plates per fan					
12.4	Inlet Cone per fan					
12.5	Inlet Guide Vane per fan					
12.6	Documentation		1 Set	Included		
13	**Sub-Total Goods** (Extended)					**$**

Line Item	Description	Part No. and OEM Name	QTY	Status	Unit Price ($CAD)	Extended Price ($)
14	Local Freight & Duties					$
15	Overseas Freight and other Duties					$
16	**Sub-Total** (Line Items 13 to 15)					**$**
17	HST / GST			Included		$
18	**Total Contract Value** (Line Items 16 &17)					**$**

APPENDIX-1 TO ANNEX "B"

INSTRUCTION – on Completing Financial "Table B-1: Contract Firm Price"

In order to complete the Contract Firm Price, Table B-1, please make sure that the table lists the following properly:

1) Grey Cells must not be filled in.
2) The assumption is that the Bidder's Offer includes all ventilation systems. Therefore, the Table shows "Included" for all systems, and quantity of "1 or 2" under "QTY" for all systems comprised of one Fan, or two identical and separate fans.

   The quantity is shown as blank for ventilation systems that may be comprised of one or two fans, depending on the Bidder's proposed arrangement; for which, the Bidder must include the appropriate quantity.
3) If any particular ventilation system, which is identified in main line-items 1 to 12, is not included in the Bid, then, place:
   - Zero under QTY, and Price columns
   - N/I for Not Included under Status for all associated line items
   - N/A for Not Applicable under Part no. for all associated line items
4) The Unit Price is the price for the total fan's package – which includes:
   - The fan identified on the main Line Item (i.e. one fan in Line Item 3); and
   - Its accessories: item 1, and any of items 2 to 5 if applicable (i.e. Line Items 3.1 to 3.5)
   - Its documentation, item 6 (i.e. Line Item 3.6).

   Extended Price is the Unit Price multiplied by QTY on the main Line Item (i.e. Line Items 1.0, 2.0, 3.0, …., and 12.0). For example, for Line Item 3, it would be the Unit Price x 2.

   The price for item 7 under each system (recommended spare parts), must not be included in the Unit Price and thus Extended Price of the main Line Item. It must be separately indicated in the table.
5) Include Part no. and OEM Name for all fans, their motors as well as their applicable accessories.
6) Under the Column for QTY and Status, for accessories:
   - Documentation are required for all fans; thus assuming all fans will be offered, "1 Set" is shown as included.
   - Suitable Vibration Isolators are required for all Fans; thus assuming all fans will be offered, the "Status" is shown as "included". The Bidder must include the proper QTY per each fan.
   - Mounting feet or plates, whichever is offered, the Bidder must show as "Included" and indicate the quantity. Otherwise, must show N/A for Not Applicable.
   - Inlet Cone or Inlet Guide Vane, whichever is offered, the Bidder must show as "Included" and indicate the quantity. Otherwise, must show N/A for Not Applicable.
7) For Line Items 15 "Overseas Freight and other Duties", if applicable, place "Included" under status, and show the price. Otherwise, show N/A and Zero under "Status" and "Price".
8) For line-item 13, Sub-Total goods (Extended) is the sum of Line items 1.1, 2.1, 3.1, 4.1, 5.1, 6.1, 7.1, 8.1, 9.1, 10.1, 11.1, and 12.1.

ANNEX "C" to PART 3 OF THE BID SOLICITATION

ELECTRONIC PAYMENT INSTRUMENTS

To be completed by the Bidder:

Canada requests that Bidders complete option 1 or 2 below:

1. ( ) Electronic Payment Instruments will be accepted for payment of invoices.

   The following Electronic Payment Instrument(s) are accepted:

   ( ) Visa Acquisition Card;

   ( ) MasterCard Acquisition Card;

   ( ) Direct Deposit (Domestic and International);

   ( ) Electronic Data Interchange (EDI);

   ( ) Wire Transfer (International Only);

2. ( ) Electronic Payment Instruments will not be accepted for payment of invoices.

The Bidder is not obligated to accept payment by Electronic Payment Instruments.

Acceptance of Electronic Payment Instruments will not be considered as an evaluation criterion.

ANNEX "D"

INTEGRITY PROVISIONS – ASSOCIATED INFORMATION FORM

To be completed by the bidder:

Please provide list of names of the following entities, according to the ownership nature of the company:

1. For a Corporation - each current member of the Bidder's Board of Directors:

   _____
   _____
   _____
   _____
   _____

2. For a Sole Proprietorship or an individual doing business under a firm name - the name of the sole proprietor or individual:

   _____

3. For a Joint Venture - the names of all current members of the Joint venture:

   _____
   _____
   _____
   _____
   _____

4. For an individual - the full name of the person:

   _____

ANNEX "E"

INSURANCE REQUIREMENTS

1. Commercial General Liability Insurance

1. The Contractor must obtain Commercial General Liability Insurance, and maintain it in force throughout the duration of the Contract, in an amount usual for a contract of this nature, but for not less than $2,000,000 per accident or occurrence and in the annual aggregate.

2. The Commercial General Liability policy must include the following:

   a. Additional Insured: Canada is added as an additional insured, but only with respect to liability arising out of the Contractor's performance of the Contract. The interest of Canada should read as follows: Canada, as represented by Public Works and Government Services Canada.

   b. Bodily Injury and Property Damage to third parties arising out of the operations of the Contractor.

   c. Products and Completed Operations: Coverage for bodily injury or property damage arising out of goods or products manufactured, sold, handled, or distributed by the Contractor and/or arising out of operations that have been completed by the Contractor.

   d. Personal Injury: While not limited to, the coverage must include Violation of Privacy, Libel and Slander, False Arrest, Detention or Imprisonment and Defamation of Character.

   e. Cross Liability/Separation of Insureds: Without increasing the limit of liability, the policy must protect all insured parties to the full extent of coverage provided. Further, the policy must apply to each Insured in the same manner and to the same extent as if a separate policy had been issued to each.

   f. Blanket Contractual Liability: The policy must, on a blanket basis or by specific reference to the Contract, extend to assumed liabilities with respect to contractual provisions.

   g. Employees and, if applicable, Volunteers must be included as Additional Insured.

   h. Employers' Liability (or confirmation that all employees are covered by Worker's compensation (WSIB) or similar program)

   i. Broad Form Property Damage including Completed Operations: Expands the Property Damage coverage to include certain losses that would otherwise be excluded by the standard care, custody or control exclusion found in a standard policy.

   j. Notice of Cancellation: The Contractor will provide the Contracting Authority thirty (30) days prior written notice of policy cancellation or any changes to the insurance policy.

   k. If the policy is written on a claims-made basis, coverage must be in place for a period of at

least 12 months after the completion or termination of the Contract.

l. Owners' or Contractors' Protective Liability: Covers the damages that the Contractor becomes legally obligated to pay arising out of the operations of a subcontractor.

m. Non-Owned Automobile Liability - Coverage for suits against the Contractor resulting from the use of hired or non-owned vehicles.

n. Advertising Injury: While not limited to, the endorsement must include coverage piracy or misappropriation of ideas, or infringement of copyright, trademark, title or slogan.

o. All Risks Tenants Legal Liability - to protect the Contractor for liabilities arising out of its occupancy of leased premises.

p. Amendment to the Watercraft Exclusion to extend to incidental repair operations on board watercraft.

q. Sudden and Accidental Pollution Liability (minimum 120 hours): To protect the Contractor for liabilities arising from damages caused by accidental pollution incidents.

r. Litigation Rights: Pursuant to subsection 5(d) of the Department of Justice Act, S.C. 1993, c. J-2, s.1, if a suit is instituted for or against Canada which the Insurer would, but for this clause, have the right to pursue or defend on behalf of Canada as an Additional Named Insured under the insurance policy, the Insurer must promptly contact the Attorney General of Canada to agree on the legal strategies by sending a letter, by registered mail or by courier, with an acknowledgement of receipt.

For the province of Quebec, send to:
Director Business Law Directorate,
Quebec Regional Office (Ottawa),
Department of Justice,
284 Wellington Street, Room SAT-6042,
Ottawa, Ontario, K1A 0H8

For other provinces and territories, send to:
Senior General Counsel,
Civil Litigation Section,
Department of Justice
234 Wellington Street, East Tower
Ottawa, Ontario K1A 0H8

A copy of the letter must be sent to the CA. Canada reserves the right to co-defend any action brought against Canada. All expenses incurred by Canada to co-defend such actions will be at Canada's expense. If Canada decides to co-defend any action brought against it, and Canada does not agree to a proposed settlement agreed to by the Contractor's insurer and the plaintiff(s) that would result in the settlement or dismissal of the action against Canada, then Canada will be responsible to the Contractor's insurer for any difference between the proposed settlement amount and the amount finally awarded or paid to the plaintiffs (inclusive of costs and interest) on behalf of Canada.

2. All Risk in Transit Insurance

1. The Contractor must obtain on the Government's Property, and maintain in force throughout the duration of the Contract, All Risk Property in Transit insurance coverage for all applicable conveyances while under its care, custody or control, in an amount of not less than $ 200,000.00 per shipment. Government Property must be insured on a Replacement Cost (new) basis.

2. Administration of Claims: The Contractor must notify Canada promptly about any losses or damages to Government Property and monitor, investigate and document losses of or damage to ensure that claims are properly made and paid.

3. The All Risk Property in Transit insurance must include the following:

    a. Notice of Cancellation: The Contractor will provide the Contracting Authority at least thirty (30) days prior written notice of any policy cancellation or any changes to the insurance policy.

    b. Loss Payee: Canada as its interest appears or as it may direct.

    c. Waiver of Subrogation Rights: Contractor's Insurer to waive all rights of subrogation against Canada as represented by Canadian Coast Guard and Public Works and Government Services Canada for any and all loss of or damage to the property however caused.

ANNEX "F"

QUALITY CONTROL / INSPECTION

1. Quality Control Plan

The Contractor must implement and follow a Quality Control Plan (QCP), prepared in accordance with the latest issue (at contract date) of the ISO 10005: 2005 Quality Management – Guidelines for quality plans, approved by both the Inspection and the TA.

The QCP must describe how the Contractor will conform to the specified quality requirements of the Contract and specify how the required quality activities are to be carried out, including quality assurance of subcontractors. The Contractor must include a traceability matrix form the elements of the specified quality requirements to the corresponding paragraphs in the QCP. The QCP must be made available to the Inspection and Technical Authority for review and approval within ten (10) calendar days after contract award.

The documents referenced in the QCP must be made available within two (2) working days as and when requested by the TA. The Contractor must make appropriate amendments to the QCP throughout the term of the Contract to reflect current and planned quality activities. Amendments to the QCP must be acceptable to the Inspection Authority (IA) and the TA.

2. Inspection and Test Plan Criteria

Inspection criteria, procedures and requirements are stated in the specifications, drawings, technical orders and reference standards invoked by the "Requirement". Test and trial documentation may also be included or referenced in the Requirement.

Contractor Imposed Tests and trials, in addition to those given in the Requirement, must be conducted as required by the Industry best practices in order to assure the required performance characteristics, quality, and endurance necessary for the intended function and application.

The Inspection and Test Plan must be prepared by the Contractor in accordance with the above criteria, its quality plan, and must provide the following reference information:

a) the ship's name
b) the specification number item
c) equipment/system description and a statement defining the parameter which is being inspected
d) a list of applicable documents referenced or specified in the inspection procedure
e) the inspection, test or trial requirements specified in the Requirement
f) conformance parameters, accept/reject criteria and recording of results, deficiencies found and description of corrective action(s) required;
g) names and signatures of the persons conducting and witnessing the inspection, test or trial.

3. Inspection Process

Upon receipt and acceptance of the Contractor's Test and Trials Plans, inspection will consist of a number of Inspection Points supplemented by such other inspections, tests, demonstrations and trials as may be deemed necessary by the IA to permit him to certify that the work has been performed in compliance with the provisions of Annex “A”.

A. The Contract requires the implementation of a Quality Assurance/Quality Control system. Therefore, the IA must receive a copy of the Contractor’s internal inspection report, pertaining to a specified item, before conducting the requested inspection. If third party inspections are required by the Contract, the reports of these inspections must be received by the IA before the Work is inspected.

B. Upon inspection, if the item is determined as unsatisfactory – where it was stated as satisfactory in the QA/QC documentation sent to the IA before inspection, the IA will issue an Inspection NCR against the item and another against the failure of the Contractor's QA/QC system.

4. Inspection Records and Reports

a) The Contractor on the inspection record, test or trials sheets as applicable, must record the results of each inspection. The Contractor must maintain files of completed inspection records consistent with the Quality Standard and its Quality Plan for this project.

b) The Contractor’s QC representative must sign as having witnessed the inspection, test or trial on the inspection record. The Contractor must forward originals of completed inspection records, together with completed test(s) and/or trials sheets to the TA.

c) Unsatisfactory inspection, test and/or trial results for which corrective action cannot be completed during the normal course of the inspection, test and/or trial will require the Contractor to establish and record the cause of the unsatisfactory condition to the satisfaction of the Inspection Authority. Representatives to Canada may assist in identification where appropriate.

d) Quality Control, Inspection and Test records substantiating conformance to the specified requirements, including records of corrective actions, must be retained by the Contractor for three (3) years from the date of completion or termination of the Contract and must be made available to the Inspection Authority upon request.

5. Inspection Non-conformance Report

a) An Inspection Non-Conformance Report (NCR) will be issued for each non-conformance noted by the IA. Each report will be uniquely numbered for reference purposes, describe the non-conformance issue, and will be signed and dated by the IA.

b) When the non-conformance has been corrected by the Contractor and has been re-inspected and accepted by the IA, the IA will complete the Report by adding an applicable signed and dated notation.

c) At the end of the project, the content of all Inspection Non-Conformance Reports which have not been signed-off by the IA will be transferred to the Acceptance documents before the Inspection Authority's certification of such documents.

2. Corrective Action Reports

Corrective Action Report that identifies the corrective action to remove cause of unsatisfactory inspections, tests or trials must be submitted to the Contracting Authority and to the IA in writing by the Contractor, for approval before undertaking remedies. Such notices must be included in the final records passed to the Contracting Authority and to the IA.

ANNEX "G"

WARRANTY PROCEDURES AND WARRANTY CLAIM FORM

1. Reporting Failures with Warranty Potential

The initial purpose of a report of a failure is to facilitate the decision as to whether or not to involve warranty and to generate action to effect repairs. Therefore in addition to identification, location data, etc. the report must contain details of the defect. Warranty decisions, as a general rule, are to be made locally and the administrative process is to be in accordance with procedures as indicated.

These procedures are necessary as invoking a warranty does not simply mean that the warrantor will automatically proceed with repairs at his expense. A review of the defect may well result in a disclaimer of responsibility; therefore, it is imperative that during such a review the Department is directly represented by a competent TA qualified to agree or disagree with the warrantor's assertions. Since the INSPECTION AUTHORITY (IA) has the closest and most active involvement of the completed contracted work, this agency may assume this role.

2. Procedures

A. Immediately after it becomes known to the ship's staff that an equipment/system is performing below accepted standards or has become defective, the following procedures for investigation and reporting of the potential warranty issue must be followed:

(i) The Vessel advises the TA when a defect, which is considered to be directly associated the refit work, has occurred.

(ii) On review of the Specification and the Acceptance Document, the TA in consort with Ship's Staff is to complete the Tombstone Data and section 1 of the Warranty Claim Form, and forward the original to the Contractor for review with a copy to the Contracting Authority. If the Contracting Authority or the TA/IA is unable to support warranty action, the Defect Claim Form will be returned to the originator with a brief justification. It is to be noted that in this instance, PWGSC will inform the Contractor of its decision and no further action will be required of the Contractor.

Warranty defect claims may be forwarded in hard copy, by fax or by e-mail – whichever format is the most convenient.

(iii) Assuming the Contractor accepts full responsibility for repair, the Contractor is to complete Section 2 and 3 of the Warranty Claim Form, and return it to the TA or IA (as in paragraph 1.B above); who confirms corrective action has been completed, and will distribute the form to the Contracting Authority, and the PA.

B. In the event that the Contractor disputes the claim as a warranty defect, or agrees to share the responsibility, the Contractor is to complete Part 2 and 3 of the Warranty Claim Form with the

appropriate information and forward it to the Contracting Authority who will distribute copies as necessary.

C. When a warranty defect claim is disputed by the Contractor, the TA may arrange to correct the defect by in-house resources or by contracting the work out. All associated costs must be tracked and recorded as a possible charge against the contractor by PWGSC action. Material costs and man-hours expended in correcting the defect are to be recorded and entered in Section 5 of the warranty defect claim by the TA who will forward the warranty defect claim to the PWGSC Contracting Authority for action. Defective parts of equipment are to be retained pending settlement of claim.

D. Defective equipment associated with potential warranty should not normally be dismantled until the Contractor's representative has had the opportunity to observe the defect. The necessary work is to be undertaken through normal repair methods and costs must be segregated as a possible charge against a contractor by PWGSC action.

3. Liability

A. Agreement between the Contracting Authority, PA, IA, TA and the Contractor will result in one of the following conditions:

(i) The Contractor accepts full responsibility for costs to repair or overhaul under the warranty provisions of the contract;

(ii) The TA and the PA accepts full responsibility for repair and overhaul of item concerned; or

(iii) The Contractor, the TA and the PA agree to share responsibility for the costs to repair or overhaul the unserviceable item, in such cases the PWGSC Contracting Authority will negotiate the best possible sharing arrangement.

B. In the event of a disagreement as in paragraph 2.C, above, PWGSC will take necessary action with the Contractor while the TA and the PA inform the Senior Management of the pertinent data and recommendations.

C. The total cost of processing warranty claims must include accommodation and travel costs of the Contractor's employees as well as equipment/system down time and operational constraints. Accordingly, the cost to remediate the defect, in man-hours and material, will be discussed between the Contracting/Inspection Authorities, PA and the TA to determine the best course of action.

Public Works and Government Services Canada | Travaux publics et Services Gouvernementaux Canada

Warranty Claim
Réclamation de Garantie

Vessel Name – nom de navire	File No. – N°. de dossier	Contract No. – N° de contrat
Customer Department – Ministère client		Warranty Claim Serial No. Numero de série de réclamation de garantie
Contractor - Entrepreneur		Effect on Vessel Operations Effet sur des opérations de navire Critical / Critique ☐ Degraded / Dégradé ☐ Operational / Opérationnel ☐ Non-Operational / Non- Opérationnel ☐

1. Description of Complaint – Description de plainte

Contact Information – Information de contrat

Name – Nom	Tel. No. – N° Tél	Signature – Signature	Date - Date

ANNEX "H"

MANDATORY DELIVERABLES CHECKLIST

Notwithstanding deliverable requirements specified within the bid solicitation and its associated "Requirement" (Annex A), and Bid Evaluation Criteria (Annex L) mandatory deliverables that must be submitted with the Bidder's tender to be deemed responsive, are summarized below in Table – H1.

The Bidder must submit a completed Annex H, Table – H1 – Mandatory Tender Deliverables Check List with the Bid Package. The Bidder's submitted check list will be evaluated against the requirements.

Table – H1: Mandatory Tender Deliverables Checklist

Item	Description	Filled and/or Attached
1	Completed and signed Solicitation document part 1, page 1	
2	Separately compiled and packaged Technical Bid, Financial Bid, and Certification in appropriate number of copies and format, as per Part 3, article 3.1	
3	Completed Annex "B" – Basis of Payment	
4	Completed Annex "C" – Electronic Payment Instrument	
5	Completed Annex "H", Table H-1	
6	Completed Annex "L", Table L-1	
7	Changes to any applicable laws as per PART 2 – Bidder Instructions, article 2.4	
8	Integrity Provisions - Declaration of Convicted Offences, as per PART 5 – articles 5.1 and 5.1.1	
9	Integrity provisions – Associated information, as per PART 5 – articles 5.2 and 5.2.1	
10	Proof of capability to obtain the Insurance Requirements as per Part 6, article 6.2 and Annex E	
11	If registered, valid ISO 9001-2008 Certification, as per PART 7, article 7.14	
12	An Installation, Operation, and Maintenance Manual – identifying the specific information dedicated to each Particular Fan and Motor, including maintenance schedule and consumables types, as per Annex "A", article 4.2, 4.2.1.a, and item M5 in Table L-1: Mandatory Technical Criteria.	
13	Dimensional drawings for each fan including, material thickness, weight of complete assembly without motor, and OEM name and Part Number, as per Annex "A" , article 4.2, 4.2.1.c, and item M6 in Table L-1: Mandatory Technical Criteria.	
14	Dimensional drawings for each motor including weight, and OEM name and Part Number, as per Annex "A", article 4.2, 4.2.1.d, and item M7 in Table L-1: Mandatory Technical Criteria.	

Item	Description	Filled and/or Attached
15	Fan and motor performance data and applicable curves – related to electrical, sound levels, airflow and pressure, etc… – for each fan separately, as well as the system's static pressure (if in Contra arrangement), as per Annex "A", article 4.2, 4.2.1.b (in part), and item M8 in Table L-1: Mandatory Technical Criteria.	
16	The Bidder must provide Type Approval Certificates (acceptable by Transport Canada), as per Annex "A" article 3.2, item1.	

Table – H2, Required Deliverables Documentation after Contract Award

Item	Description	Reference in This RFP Document	Due by:
1	Insurance requirements and certification	Part 7, article 7.10	Ten (10) Working days after Contract Award
2	Quality Control Plan (QCP)	Annex F, section 1	Ten (10) Working days after Contract Award
3	Parts and Components Catalogue with Vendor and OEM Part numbers – clearly identified for each fan and its motor	Part 7, article 7.14.2	Fifteen (15) Working days after Contract Award
4	Factory Acceptance Test documentation for each fan	Annex "A" , article 4.2, 4.2.1.b	Fifteen (15) Working days before Fans' delivery
5	All drawings and bill of materials used for each of the new Fans, their motors and accessories	Annex "A" , article 4.2, 4.2.1.f	Fifteen (15) Working days before Fans' delivery

ANNEX "I"

CONTRACTOR'S BID

Annex "I" will be completed to include the Bid from the selected Bidder as part of the resulting Contract.

ANNEX "J"

BIDDERS' QUESTIONS AND CANADA ANSWERS

Annex "J" Bidders Questions and Canada's Answers will be provided as one or more separate amendment(s) to this RFP document, as Questions are raised.

Instructions to Bidders:

Bidders must submit their requests for clarifications or questions in writing, and only to the Contracting Authority. Please refer to Section 2.3 "Enquiries - Bid Solicitation" of this Solicitation Document.

For each question, the Bidders must indicate the Document Name (RFP, or Annex & Appendix ID), page number, section number, subsection number, and paragraph ID pertaining to the subject of the question – to facilitate receiving the related answers in a timely manner.

Canada will provide the required responses, changes and/or clarifications, via solicitation amendment, to be available to all Bidders.

ANNEX "K"

ABBREVIATIONS

The abbreviations listed below are used within this document and related Annexes.

ABBREVIATIONS	DEFINITIONS
BHP	Break Horsepower
CCG	Canadian Coast Guard
CETA	Canada-European Union Comprehensive Economic and Trade Agreement
CFM	Cubic Feet per Minute
CFTA	Canadian Free Trade Agreement
DDP	Duty Delivery Paid (Incoterm 2010 mode of Transportation)
FCC	Foreign Currency Component
EF	Exhaust Fan
GST	Goods and Services Tax
HST	Harmonized Sales Tax
IA	Inspection Authority
ID	Identification Code or Number
IP	Ingress Protection
ISO	International Organization for Standardization
MCR	Machinery Control Room
N/A	Not Applicable
NAFTA	North America Free Trade Agreement
N/I	Not Included
NCR	Non-Conformance Report
OEM	Original Equipment Manufacturer
PA	Procurement Authority
PWGSC	Public Works and Government Services Canada
QA	Quality Assurance
QC	Quality Control
QCP	Quality Control Plan
QTY	Quantity
SACC	Standard Acquisition Clauses and Conditions
SF	Supply Fan
TA	Technical Authority
TCMS	Transport Canada Marine Safety
TP	Transport Canada Publication
WTO-AGP	World Trade Organization Agreement on Government Procurement

ANNEX "L"

BID EVALUATION CRITERIA

1. Technical Bid Evaluation

1.1 Mandatory Technical Criteria

To be responsive, the bid proposal must meet all mandatory requirement criteria specified here in Table-L1. Should any of the requirements under this section be omitted from the proposal, the bid proposal will be deemed as non-responsive and will be given no further consideration.

In order to substantiate their compliance to each criterion, the Bidder must reference the supporting documents within their Technical Bid, with the document name and number, exact page number(s) and paragraph number(s) where the required substantiation can be found.

Mandatory criteria are evaluated on a simple pass/fail basis. Bids that fail to meet the mandatory technical criteria shall be declared non-responsive and no further consideration shall be given. Only bids that have met the mandatory criteria are subject to point-rated technical evaluation.

Table L-1: Mandatory Technical Criteria

Item No.	Description of Requirements & Their References in Solicitation Documents	Bid Preparation Instructions & Objective Evidence Required to Show Compliance	Bidder to Include Bid Documents References		Canada's Evaluation	
			Document Title	Section/ Page	Pass	Fail
M1	The Bidder must complete and submit the Annex "B" – Basis of Payment separately.	Submit the completed Table-1: Contract Firm Price in accordance with instructions given in Appendix-1 to Annex B.				
M2	The Bidder must provide the required Integrity Provisions - Declaration of Convicted Offences, as per PART 5 – articles 5.1 and 5.1.1.	Submit the completed Forms for the Integrity Regime.				
M3	The Bidder must provide the required Integrity provisions – Associated information, as per PART 5 – articles 5.2 and 5.2.1.	Submit the completed Integrity Provisions – Associated Information Form in Annex "D".				
M4	The Bidder must provide proof of capability to acquire the required insurance, if awarded a contract, as per PART 6 – article 6.2.	Submit a letter from an insurance broker/company licensed to operate in Canada stating that the Bidder, if awarded a contract, can be insured in accordance with the Insurance Requirements specified in Annex "E".				
M5	The Bidder must provide the Installation, Operation, and Maintenance Manual for the fans and their motors, as per Annex "A", article 4.2, 4.2.1.a.	Submit the required Manuals – clearly marking the information related to each fan and its motor (if the manual is a generic manual with data on multiple types of fans and/or motors).				
M6	The Bidder must provide the dimensional drawings for each fan including, material thickness, weight of complete assembly without motor, and OEM name and Part Numbers, as per Annex "A" , article 4.2, 4.2.1.c	Submit the required dimensional drawings to support the notion that the offered fans fit into their provided space envelope, and also show: - construction material and material thickness;				

Item No.	Description of Requirements & Their References in Solicitation Documents	Bid Preparation Instructions & Objective Evidence Required to Show Compliance	Bidder to Include Bid Documents References		Canada's Evaluation	
			Document Title	Section/ Page	Pass	Fail
		- Accessories, including their vibration isolators. However, the drawing for vibration Isolators can be provided separately, if their type and ID are included in the Fan drawing.				
M7	The Bidder must provide the dimensional drawings for each motor including weight, and OEM name and Part Numbers, as per Annex "A" , article 4.2, 4.2.1.d	Submit the required dimensional drawings that must also show the weight.				
M8	The Bidder must provide the fans' and their motors' performance data and applicable curves – related to electrical, sound levels, airflow and pressure – for each fan separately, as well as the system's static pressure (if in Contra arrangement), as per Annex "A" , article 4.2, 4.2.1.b	Submit the required performance data to show the following for: Each ventilation system: Fan ID(s) and function, Type/model, installation mode, Airflow, Static Pressure, Sound Power levels; Each Motor: type & size, OEM, Insulation Class, IP-rating, Operating Temperature Range, Space Heater info, Power Supply Voltage, efficiency, Speed, motor HP, motor BHP, and Start-up Amps & Full Load Amps.				
M9	The Bidder must provide Type Approval Certificates (acceptable by Transport Canada), as per Annex "A" , article 3.2, item 1	Submit the required Type Approval Certificates for all motors.				

1.2 Point Rated Technical Criteria

The table below, shows how the Bidder's offered fans will be rated in technical evaluation for their fit and function.

The evaluators will rate each sub-item (a to d) and assign one single value in the corresponding cell under "Points/Item". Then, all individual points for each Point Rated item (PR 1 to 12) will be summed up to calculate the total points for that PR – to be placed in the corresponding cell under "Total Points/PR". Next, all "Total Points/PR" will be added together to determine the Total Points Acquired.

The maximum available points are 960 Points (12 Items x 80 Points). The minimum required points are 720 Points (12 Items x 60 Points).

Table L-2: Point Rated Technical Criteria

Item No.	Description	Allowable Conditions / Alternatives & Allocated Number of Points		Canada's Evaluation		
				Points / Item	Total Points / PR	Justification Notes
PR1	Engine Room Supply Fans: SF-7 and SF-8	Max. points available: 80 Min. points required: 60				
a	Casing diameter (D): 30 inches Casing length (L): 9 inches	9" ≤ L < 22", D = 30" 9" ≤ L < 22", 25" > D ≤ 30"	30 Pts 25 Pts			
b	Airflow: 12920 CFM (21960 m^3/h) Static Pressure: 1.84 in-wg (460 Pa)	CFM =12920 at 1.84 in-wg CFM =12920 ± 2% at 1.84 ± 5% in-wg CFM =12920 ± 5% at 1.84 ± 10% in-wg CFM >12920 ± 5%	15 Pts 10 Pts 5 Pts 0 Pts			
c	Max. Sound Pressure Level: 83 dBA at 6.5 ft	SPL ≤ 85 dBA 86 dBA < SPL < 100 dBA SPL > 100 dBA	10 Pts 5 Pts 0 Pts			
d	Break HP: 7.35 / 0.92 2-Speed, double winding	BHP = (7.35/0.92) ± 10% BHP = (7.35/0.92) + 20% or -25% (7.35/0.92) + 20% < BHP < (7.35/0.92) -20%	25 Pts 20 Pts 0 Pts			
PR2	Engine Room Exhaust Fans: EF-7 and EF-8	Max. points available: 80 Min. points required: 60				

Item No.	Description	Allowable Conditions / Alternatives & Allocated Number of Points		Canada's Evaluation		
				Points / Item	Total Points / PR	Justification Notes
a	Casing diameter (D): 30 inches Casing length (L): 9 inches	9" ≤ L ≤ 22", D = 30" 9" ≤ L ≤ 22", 25" > D ≤ 30"	30 Pts 25 Pts			
b	Airflow: 12920 CFM (21960 m^3/h) Static Pressure: 0.415 in-wg (104 Pa)	CFM =12920 at 0.415 in-wg CFM =12920 ± 2% at 0.415 ± 10% in-wg CFM =12920 ± 5% at 0.415 ± 15% in-wg CFM >12920 ± 5%	15 Pts 10 Pts 5 Pts 0 Pts			
c	Max. Sound Pressure Level: 80 dBA at 6.5 ft	SPL ≤ 85 dBA 86 dBA < SPL < 100 dBA SPL > 100 dBA	10 Pts 5 Pts 0 Pts			
d	Break HP: 2.4 / 0.33 2-Speed, double winding	BHP = (2.4/0.33) ± 10% BHP = (2.4/0.33) + 20% or -25% (2.4/0.33) + 20% < BHP < (2.4/0.33) -20%	25 Pts 20 Pts 0 Pts			
PR3	Engine Room Supply Fans: SF-5 & SF-6	Max. points available: 80 Min. points required: 60				
a	Casing diameter (D): 30 inches Casing length (L): 26-1/16 inches	L = 26-1/16", D = 30" 26-1/16" ≤ L < 36", D = 30"	30 Pts 25 Pts			
b	Airflow: 12920 CFM (21960 m^3/h) Static Pressure: 1.36 in-wg (340 Pa)	CFM =12920 at 1.36 in-wg CFM =12920 ± 2% at 1.36 ± 5% in-wg CFM =12920 ± 5% at 1.36 ± 10% in-wg CFM >12920 ± 5%	15 Pts 10 Pts 5 Pts 0 Pts			
c	Max. Sound Pressure Level: 81 dBA at 6.5 ft	SPL ≤ 85 dBA 86 dBA < SPL < 100 dBA SPL > 100 dBA	10 Pts 5 Pts 0 Pts			
d	Break HP: 6.49 / 0.81 2-Speed, double winding	BHP = (6.49/0.81) ± 10% BHP = (6.49/0.81) + 20% or -25% (6.49/0.81) + 20% < BHP > (6.49/0.81) -20%	25 Pts 20 Pts 0 Pts			
PR4	Main Deck Supply Fan: SF-3	Max. points available: 80 Min. points required: 60				

Item No.	Description	Allowable Conditions / Alternatives & Allocated Number of Points		Canada's Evaluation		
				Points / Item	Total Points / PR	Justification Notes
a	Casing diameter (D): 19 inches Casing length (L): 15 inches	L=15", D = 19" 15" ≤ L ≤ 30", 15" > D ≤ 19"	30 Pts 25 Pts			
b	Airflow: 3288 CFM (5590 m^3/h) Static Pressure: 1.4 in-wg (350 Pa)	CFM =3288 at 1.4 in-wg CFM =3288 ± 5% at 1.4 ± 5% in-wg CFM =3288 ± 10% at 1.4 ± 10% in-wg CFM >3288 ± 10%	15 Pts 10 Pts 5 Pts 0 Pts			
c	Max. Sound Pressure Level: 78 dBA at 6.5 ft	SPL ≤ 75 dBA 76 dBA < SPL ≤ 85 dBA SPL > 85 dBA	10 Pts 5 Pts 0 Pts			
d	Break HP: 1.0 / 0.13 2-Speed, double winding	BHP = (1.0/0.13) ± 10% BHP = (1.0/0.13) + 20% or -25% (1.0/0.13) + 20% < BHP < (1.0/0.13) -20%	25 Pts 20 Pts 0 Pts			
PR5	Boat Deck Supply Fan: SF-2	Max. points available: 80 Min. points required: 60				
a	Casing diameter (D): 19 inches Casing length (L): 15 inches	L = 15", D = 19" 15" ≤ L ≤ 30", 14" > D ≤ 19"	30 Pts 25 Pts			
b	Airflow: 2683 CFM (4560 m^3/h) Static Pressure: 0.9 in-wg (225 Pa)	CFM =2683 at 0.9 in-wg CFM =2683 ± 5% at 0.9 ± 10% in-wg CFM =2683 ± 10% at 0.9 ± 10% in-wg CFM >2683 ± 10%	15 Pts 10 Pts 5 Pts 0 Pts			
c	Max. Sound Pressure Level: 73 dBA at 6.5 ft	SPL ≤ 75 dBA 76 dBA < SPL ≤ 85 dBA SPL > 85 dBA	10 Pts 5 Pts 0 Pts			
d	Break HP: 0.62 / 0.08 2-Speed, double winding	BHP = (0.62/0.08) ± 10% BHP = (0.62/0.08) + 20% or -25% (0.62/0.08) + 20% < BHP < (0.62/0.08) -20%	25 Pts 20 Pts 0 Pts			
PR6	Emergency Gen. Supply Fan: SF-9	Max. points available: 80 Min. points required: 60				

Item No.	Description	Allowable Conditions / Alternatives & Allocated Number of Points		Canada's Evaluation		
				Points / Item	Total Points / PR	Justification Notes
a	Casing diameter (D): 19 inches Casing length (L): 15 inches	L = 15", D = 19" 12" ≤ L ≤ 24", 12" > D ≤ 19"	30 Pts 25 Pts			
b	Airflow: 2683 CFM (4560 m^3/h) Static Pressure: 0.9 in-wg (225 Pa)	CFM =2683 at 0.9 in-wg CFM =2683 ± 5% at 0.9 ± 10% in-wg CFM =2683 ± 10% at 0.9 ± 10% in-wg CFM >2683 ± 10%	15 Pts 10 Pts 5 Pts 0 Pts			
c	Max. Sound Pressure Level: 73 dBA at 6.5 ft	SPL ≤ 75 dBA 76 dBA ≤ SPL ≤ 85 dBA SPL > 85 dBA	10 Pts 5 Pts 0 Pts			
d	Break HP: 0.62 Single-Speed	BHP = 0.62 ± 10% BHP = 0.62 + 20% or -25% 0.62 + 20% < BHP < 0.62 -20%	25 Pts 20 Pts 0 Pts			
PR7	Focsule Supply Fan: SF-1	Max. points available: 80 Min. points required: 60				
a	Casing diameter (D): 15 inches Casing length (L): 15 inches	L = 15", D = 15" 15" ≤ L ≤ 21", 12" ≤ D ≤ 15"	30 Pts 25 Pts			
b	Airflow: 1600 CFM (2720 m^3/h) Static Pressure: 0.54 in-wg (135 Pa)	CFM =1600 at 0.54 in-wg CFM =1600 ± 5% at 0.54 ± 10% in-wg CFM =1600 ± 10% at 0.54 ± 15% in-wg CFM >1600 ± 10%	15 Pts 10 Pts 5 Pts 0 Pts			
c	Max. Sound Pressure Level: 58 dBA at 6.5 ft	SPL ≤ 70 dBA 71 dBA ≤ SPL ≤ 85 dBA SPL > 85 dBA	10 Pts 5 Pts 0 Pts			
d	Break HP: 0.22 / 0.03 2-Speed, double winding	BHP = (0.22/0.03) ± 10% BHP = (0.22/0.03) + 20% or -25% (0.22/0.03) + 20% < BHP < (0.22/0.03) -20%	25 Pts 20 Pts 0 Pts			
PR8	Galley Exhaust Fan: EF-2	Max. points available: 80 Min. points required: 60				

Item No.	Description	Allowable Conditions / Alternatives & Allocated Number of Points		Canada's Evaluation		
				Points / Item	Total Points / PR	Justification Notes
a	Casing diameter (D): 19 inches Casing length (L): 15 inches	L = 15", D = 19" 15" ≤ L ≤ 26", D = 19"	30 Pts 25 Pts			
b	Airflow: 2125 CFM (3610 m^3/h) Static Pressure: 2.5 in-wg (625 Pa)	CFM =2125 at 2.5 in-wg CFM =2125 ± 5% at 2.5 ± 5% in-wg CFM =2125 ± 10% at 2.5 ± 10% in-wg CFM >2125 ± 10%	15 Pts 10 Pts 5 Pts 0 Pts			
c	Max. Sound Pressure Level: 78 dBA at 6.5 ft	SPL ≤ 75 dBA 76 dBA ≤ SPL ≤ 85 dBA SPL > 85 dBA	10 Pts 5 Pts 0 Pts			
d	Break HP: 1.39 Single-Speed	BHP = 1.39 ± 10% BHP = 1.39 + 20% or -25% 1.39 + 20% < BHP < 1.39 -20%	25 Pts 20 Pts 0 Pts			
PR9	Deck Workshop Exhaust Fan(s): EF-6 or EF-6.1 and EF-6.2	Max. points available: 80 Min. points required: 60				
a	Casing diameter (D): 12 inches Casing length (L): 15 inches (each fan)	L ≤ 30", D = 12" (a single fan system) L ≤ 15", D = 12" (each fan in a 2-fan system) 12" ≤ L ≤ 22", 8" ≤ D ≤ 12" (either a single fan or a 2-fan system)	30 Pts 30 Pts 25 Pts			
b	Airflow: 424 CFM (720 m^3/h) Static Pressure: 0.832 in-wg (208 Pa)	CFM =424 at 0.832 in-wg CFM =424 ± 10% at 0.832 ± 5% in-wg CFM =424 ± 15% at 0.832 ± 10% in-wg CFM >424 ± 15%	15 Pts 10 Pts 5 Pts 0 Pts			
c	Max. Sound Pressure Level: 63 dBA at 6.5 ft (each fan, if it is a 2 fan system)	SPL ≤ 70 dBA 71 dBA ≤ SPL ≤ 80 dBA SPL > 80 dBA	10 Pts 5 Pts 0 Pts			
d	Break HP: 0.05 Single-Speed (each fan, if it is a 2 fan system)	BHP = 0.05 ± 10% BHP = 0.05 + 20%or -25% 0.05 + 20% < BHP < 0.05 -20%	25 Pts 20 Pts 0 Pts			

Item No.	Description	Allowable Conditions / Alternatives & Allocated Number of Points		Canada's Evaluation		
				Points / Item	Total Points / PR	Justification Notes
PR10	MCR Supply Fan(s): SF-4	Max. points available: 80 Min. points required: 60				
a	Casing diameter (D): 12.25 inches Casing length (L): 25.5 inches	L = 25.5", D = 12.25" 12" ≤ L ≤ 30", 8" ≤ D ≤ 14"	30 Pts 25 Pts			
b	Airflow: 1000 CFM (1700 m^3/h) Static Pressure: 1.0 in-wg (250 Pa)	CFM =1000 at 1.0 in-wg CFM =1000 ± 5% at 1.0 ± 5% in-wg CFM =1000 ± 10% at 1.0 ± 10% in-wg CFM >1000 ± 10%	15 Pts 10 Pts 5 Pts 0 Pts			
c	Max. Sound Pressure Level: 63 dBA at 6.5 ft	SPL < 65 dBA 65 dBA ≤ SPL ≤ 75 dBA SPL > 75 dBA	10 Pts 5 Pts 0 Pts			
d	Motor Amperage: 6.8 Amp Single Speed Only one fan is currently installed	Amp ≤ 6.8 6.8 ≤ Amp ≤ 10.0 Amp > 10.0	25 Pts 20 Pts 0 Pts			
PR11	Toilet Exhaust Fan: EF-4	Max. points available: 80 Min. points required: 60				
a	Casing diameter (D): 19 inches Casing length (L): 15 inches	L=15", D = 19" 15" ≤ L ≤ 22", D = 19"	30 Pts 25 Pts			
b	Airflow: 3288 CFM (5490 m^3/h) Static Pressure: 1.4 in-wg (350 Pa)	CFM =3288 at 1.4 in-wg CFM =3288 ± 5% at 1.4 ± 5% in-wg CFM =3288 ± 10% at 1.4 ± 10% in-wg CFM >3288 ± 10	15 Pts 10 Pts 5 Pts 0 Pts			
c	Max. Sound Pressure Level: 78 dBA at 6.5 ft	SPL ≤ 78 dBA 79 dBA ≤ SPL ≤ 85 dBA SPL > 85 dBA	10 Pts 5 Pts 0 Pts			
d	Break HP: 1.0 / 0.13 2-Speed, double winding	BHP = (1.0/0.13) ± 10% BHP = (1.0/0.13) + 20% or -25%	25 Pts 20 Pts			

Item No.	Description	Allowable Conditions / Alternatives & Allocated Number of Points		Canada's Evaluation		
				Points / Item	Total Points / PR	Justification Notes
		(1.0/0.13) + 20% > BHP < (1.0/0.13) -20%	0 Pts			
PR12	Dry Store Exhaust Fan(s): EF-3 or EF-3.1 and EF-3.2	Max. points available: 80 Min. points required: 60				
a	Casing diameter (D): 12 inches Casing length (L): 15 inches (each fan)	L ≤ 30", D = 12" (a single fan system) L =15", D = 12" (each fan in a 2-fan system) 15" ≤ L ≤ 30", D = 12" (either a single fan or a 2-fan system)	30 Pts 30 Pts 25 Pts			
b	Airflow: 1234 CFM (2060 m^3/h) Static Pressure: 0.809 in-wg (202 Pa)	CFM =1234 at 0.809 in-wg CFM =1234 ± 5% at 1.4 ± 5% in-wg CFM =1234 ± 10% at 1.4 ± 10% in-wg CFM >1234 ± 10	15 Pts 10 Pts 5 Pts 0 Pts			
c	Max. Sound Pressure Level: 63 dBA at 6.5 ft	SPL < 65 dBA 65 dBA ≤ SPL ≤ 80 dBA SPL > 80 dBA	10 Pts 5 Pts 0 Pts			
d	Break HP: 0.16 Single-Speed (each fan, if it is a 2 fan system)	BHP = 0.16 ± 10% BHP = 0.16 + 20% or -25% 0.16 + 20% < BHP < 0.16 -20%	25 Pts 20 Pts 0 Pts			
Total Points Acquired		Max. points available: 960 Min. points required: 720	**Points Acquired** = Sum (PR1 to PR12)			

2. Financial Bid Evaluation & Bidder Selection

The result of the Point Rated Technical Evaluation is used to determine the Lowest Price-per-Point; which, is the basis of selection for the successful Bidder.

Where:

Bid Value = Total Contract Value (line 18 of Table B-1: Contract Firm Price, from Annex “B” Basis of Payment)

Rating = Total Points Acquired (min. 720 to max. 960)

Cost per point = Bid Value of Compliant company / Rating of Compliant company

The following is an example:

Compliant Bids	Bid Value	Rating (xxx / 960 points)	Cost per Point	Lowest Cost per Point	Bid Recommended for selection
Bid A	$ 20,000.00	720 (75%)	$27.78		
Bid B	$ 21,000.00	816 (85%)	$29.17		
Bid C	$ 24,000.00	864 (90%)	$27.78		
Bid D	$ 25,000.00	912 (95%)	$27.41	$ 27.41	Bid D
Bid E	$ 45,000.00	960 (100%)	$46.88		

In case of a situation where there are two Bids with identical Lowest Price-per-Point, the Contract will be awarded on basis and order of preference as follows:

1. The bidder offering the best delivery date
2. A draw between Bids with identical Lowest Price-per-Point

ANNEX A

Replacement for Axial Fans for CCGS Samuel Risley

CCG Specification No: 897.18

Date of compilation : February 05, 2020

Table of Contents

1 INTENT

The Canadian Coast Guard has a requirement to replace the existing axial fans, related to 12 ventilation systems, onboard the vessel CCGS Samuel Risley.

Regulations:

- Transport Canada TP127E – Ships Electrical Standard (Latest Version);
- Canada Shipping Act – Marine Machinery Regulations (Latest Version);
- IEEE 45 – Recommended Practice for Electric Installations on Shipboard

2 EXISTING EQUIPMENT

Ventilation fans, listed below, are currently installed onboard the vessel. They must be replaced with new ventilation fans/systems that could provide the same functional characteristics and fit into their current space / ducting arrangement - requiring minimum modification; and can be supported by the existing electrical and control arrangements.

2.1 Supply Ventilation System for Engine Room

2.1.1 Existing Equipment and arrangement

Two (2) supply air fans with ducted inlet and outlet (flanged) and the following specifications:

Each Fan Data	
Fans' ID	SF-7 and SF-8
Airflow	12920 CFM (on high speed)
Static Pressure	1.84 INS (on high speed)
Manufacturer // Model	MYSON // 30G 4P/8P, casing type: L
Arrangement Type	Form: BU, Rotation: Standard
Pitch Angle	19◦
Max Sound Pressure level	100 dBA (actual rating: 83 dBA at 6.5 ft)
Weight (Fan & motor)	280 lbs (excluding accessories)
Accessories	Mounting Plates: 2 (F*), Inlet Cone: 1 (E*), Anti-Vibration Mounts
Dimensions	Refer to the Fan Drawing, figure 1, for dimensions.
Each Motor Data	
Type	2-Speed, double winding
Voltage	575 VAC / 3 phase / 60 Hz
Break HP	7.35 / 0.92
Motor HP	8.09 / 1.01
Motor RPM	1750 / 860
Amperage (approx.)	8.5 / 1.6

2.1.2 Alternative Acceptable Arrangement

It is preferable that the replacement fan have the same dimensions as the existing fans. However, if not possible, *while providing the same functional performance*, their dimension can vary – with reference to Figure 2:

a) Tube Length: Maximum 22”

b) Diameter: Cannot be more than that of the existing fan, but it can be less – provided that the total length can accommodate transitioning to the larger ductwork.

2.1.3 Related Fan Drawings and Picture

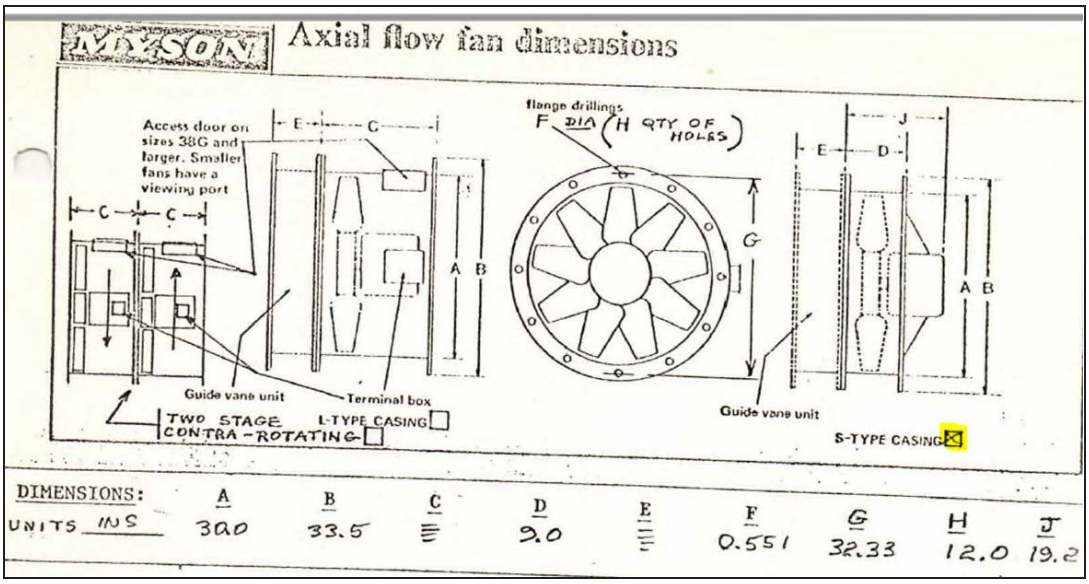

Figure 1: Fan Drawing for SF-7 & SF-8

Figure 2: Photograph of in-situ engine room Supply Fan

2.2 Exhaust Ventilation System for Engine Room

2.2.1 Existing Equipment and arrangement

Two (2) exhaust air fans with ducted inlet and outlet (flanged) and the following specifications:

Each Fan Data	
Fans' ID	EF-7 and EF-8
Airflow	12920 CFM (on high speed)
Static Pressure	0.415 INS (on high speed)
Manufacturer // Model	MYSON // 30G1/3 4P/8P, casing type: S
Arrangement Type	Form: BU, Rotation: Standard
Pitch Angle	16◦
Max Sound Pressure level	100 dBA (actual rating: 80 dBA at 6.5 ft)
Weight (Fan & motor)	195 lbs (excluding accessories)
Accessories	Mounting Plates: 2 (F*), Wire Guard: 1 (D*), Inlet Cone: 1 (E*), Anti-Vibration Mounts
Dimensions	Refer to the Fan Drawing, figure 3, for dimensions
Each Motor Data	
Type	2-Speed, double winding
Voltage	575 VAC / 3 phase / 60 Hz
Break HP	2.4 / 0.33
Motor HP	2.66 / 0.36
Motor RPM	1750 / 875
Amperage (approx.)	4.3 / 2.0

2.2.2 Alternative Acceptable Arrangement

It is preferable that the replacement fan have the same dimensions as the existing fans. However, if not possible, *while providing the same functional performance*, their dimension can vary – with reference to Figure 4:

a) Tube Length: Maximum 22"

b) Diameter: Cannot be more than that of the existing fan, but it can be less – provided that the total length can accommodate transitioning to the larger ductwork.

2.2.3 Related Fan Drawings and Picture

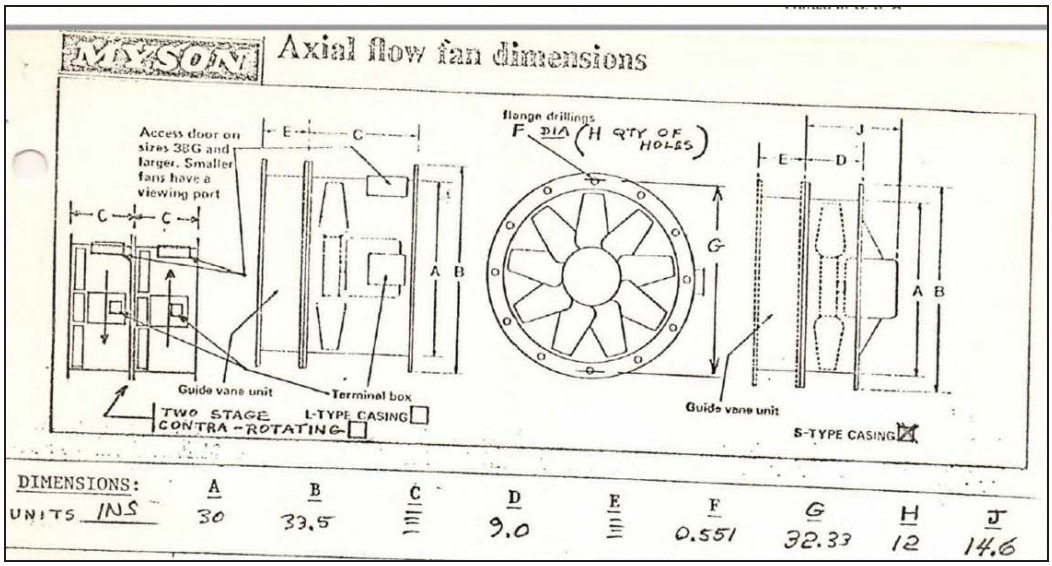

Figure 3: Fan Drawing for EF-7 & EF-8

Figure 4: Photograph of in-situ engine room exhaust axial fan

2.3 Supply Ventilation System for Main Engine (ME)

2.3.1 Existing Equipment and arrangement

Two (2) supply air fans with ducted inlet and outlet (flanged) and the following specifications:

Each Fan Data	
Fans' ID	SF-5 and SF-6
Airflow	12920 CFM (on high speed)
Static Pressure	1.36 INS (on high speed)
Manufacturer // Model	MYSON // 30G 4P/8P, casing type: L
Arrangement Type	Form: BU, Rotation: Standard
Pitch Angle	17◦
Max Sound Pressure level	100 dBA (actual rating: 81 dBA at 6.5 ft)
Weight (Fan & motor)	326 lbs (excluding accessories)
Accessories	None
Dimensions	Refer to the Fan Drawing, figure 5, for dimensions.
Each Motor Data	
Type	2-Speed, double winding
Voltage	575 VAC / 3 phase / 60 Hz
Break HP	6.49 / 0.81
Motor HP	7.5 / 0.89
Motor RPM	1750 / 860
Amperage (approx.)	7.8 / 1.6

2.3.2 Alternative Acceptable Arrangement

It is preferable that the replacement fans have the same dimensions as the existing fans. However, if not possible, *while providing the same functional performance*, their arrangement or dimension can vary – with reference to Figures 5 and 6:

a) Tube Length: open to proposal

b) Diameter: no alternative dimension.

2.3.3 Related Fan Drawings and Picture

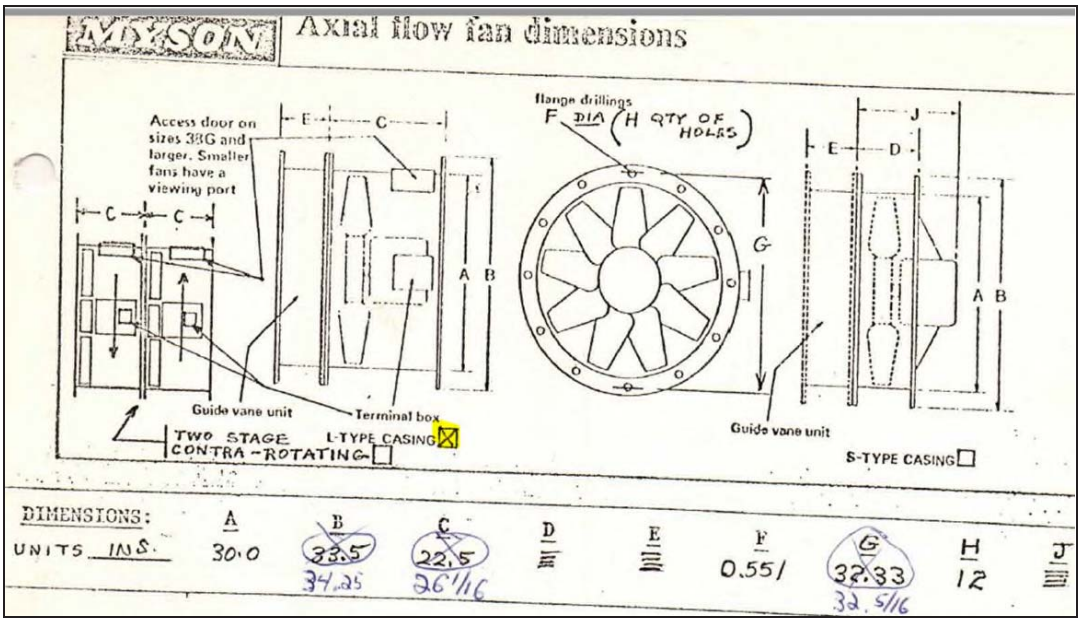

Figure 5: Fan Drawing for SF-5 & SF-6

Figure 6: Photograph of in-situ engine room Supply Fan

2.4 Supply Ventilation System for Main Deck

2.4.1 Existing Equipment and arrangement

One (1) supply air fan with ducted inlet and outlet (flanged) and the following specifications:

Fan Data	
Fan's ID	SF-3 **(Note A)**
Airflow	3288 CFM (on high speed)
Static Pressure	2.49 INS (combined, on high speed) – **Notes 1 & A, and 2.4.2.c**
Manufacturer // Model	MYSON // 194P/8P, casing type: L **(Note A)**
Arrangement Type	Form: B, Rotation: standard **(Note A)**
Pitch Angle	22◦ **(Note A)**
Max Sound Pressure level	85 dBA (actual rating: 78 dBA at 6.5 ft)
Weight (Fan & motor)	170 lbs (excluding accessories)
Accessories	Mounting feet: 2 (C*), Anti-Vibration Mounts
Dimensions	Refer to the Fan Drawing, figure 7, for dimensions
Motor Data	
Type	2-Speed, double winding
Voltage	575 VAC / 3 phase / 60 Hz
Break HP	1.0 / 0.13
Motor HP	1.1 / 0.14
Motor RPM	1750 / 870
Amperage	2.05 / 0.53

Note 1: The indicated Static Pressure is for the system comprised of two fans in a 2-stage contra-rotating arrangement. Please refer to 2.4.2.c.

Note A: The manufacturer data sheet shows this ventilation system as One (1) supply air system, comprised of two fans in a 2-stage contra-rotating arrangement. However, the contra-rotating double fan arrangement does not apply – since in fact, only the stage # 1 fan was installed when the ship was built.

2.4.2 Alternative Acceptable Arrangement

It is preferable that the replacement fan have the same dimensions as the existing fans. However, if not possible, *while providing the same functional performance*, their arrangement or dimension can vary – with reference to Figure 8:

a) Tube Length: Total of 30" maximum (including the fan and a spacer tube if needed)

b) Diameter: Cannot be more than that of the existing fan, but it can be less – provided that the total length can accommodate transitioning to the larger ductwork

c) Static Pressure: 1.4 INS minimum; higher static pressure is preferable if possible.

2.4.3 Related Fan Drawings and Picture

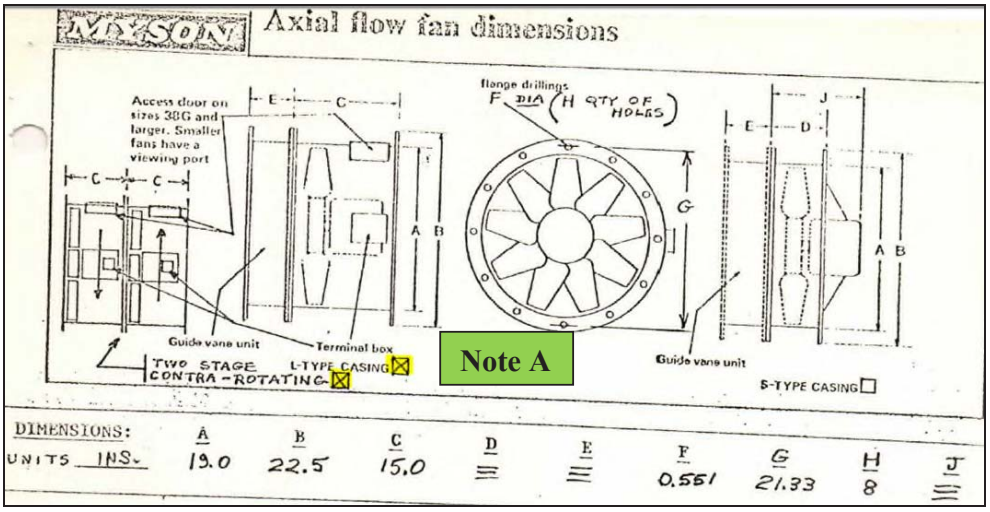

Figure 7: Fan Drawing for SF-3

Figure 8: Photograph of in-situ main deck supply axial fan

2.5 Supply Ventilation System for Boat Deck

2.5.1 Existing Equipment and arrangement

One (1) supply air fan with ducted inlet and outlet (flanged) and the following specifications:

Fan Data	
Fan's ID	SF-2 **(Note A)**
Airflow	2683 CFM (on high speed)
Static Pressure	1.61 INS (combined, on high speed) – **Notes: 2 & A, and 2.5.2c**
Manufacturer // Model	MYSON // 19G2. 4P/8P, casing type: L **(Note A)**
Arrangement Type	Form: B, Rotation: standard **(Note A)**
Pitch Angle	14◦ **(Note A)**
Max Sound Pressure level	85 dBA (actual rating: 73 dBA at 6.5 ft)
Weight (Fan & motor)	170 lbs (excluding accessories)
Accessories	Mounting feet: 2 (C*), Anti-Vibration Mounts
Dimensions	Refer to the Fan Drawing, figure 9, for dimensions
Motor Data	
Type	2-Speed, double winding
Voltage	575 VAC / 3 phase / 60 Hz
Break HP	0.62 / 0.08
Motor HP	1.10 / 0.14
Motor RPM	1750 / 870
Amperage	2.05 / 0.53 (from Name plate)

Note 2: The indicated Static Pressure is for the system comprised of two fans in a 2-stage contra-rotating arrangement. Please refer to 2.5.2.c.

Note A: The manufacturer data sheet shows this ventilation system as One (1) supply air system, comprised of two fans in a 2-stage contra-rotating arrangement. However, the contra-rotating double fan arrangement does not apply – since in fact, only the stage # 1 fan was installed when the ship was built.

2.5.2 Alternative Acceptable Arrangement

It is preferable that the replacement fan have the same dimensions as the existing fans. However, if not possible, *while providing the same functional performance*, their arrangement or dimension can vary – with reference to Figure 10:

a) Tube Length: Total of 30" maximum (including the fan and a spacer tube if needed)

b) Diameter: Cannot be more than that of the existing fan, but it can be less – provided that the total length can accommodate transitioning to the larger ductwork

c) Static Pressure: 0.9 INS minimum; higher static pressure is preferable if possible.

2.5.3 Related Fan Drawings and Picture

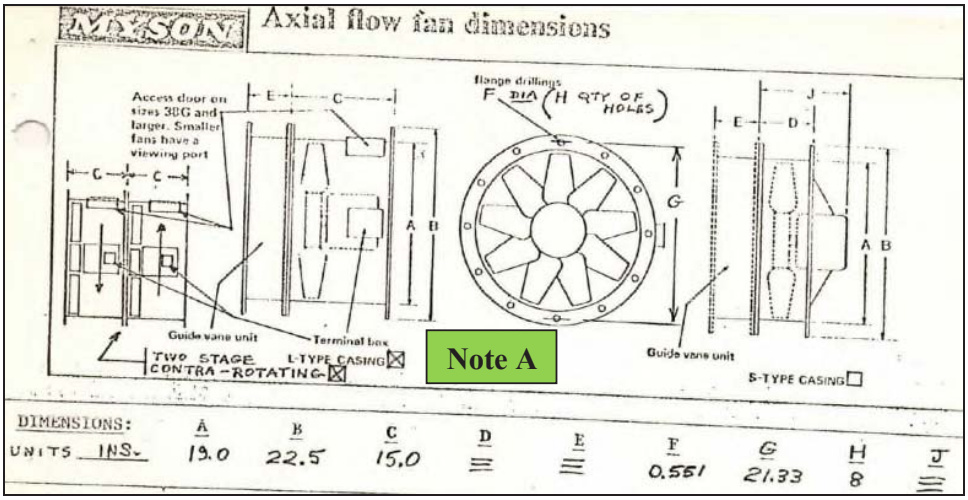

Figure 9: Fan Drawing for SF-2

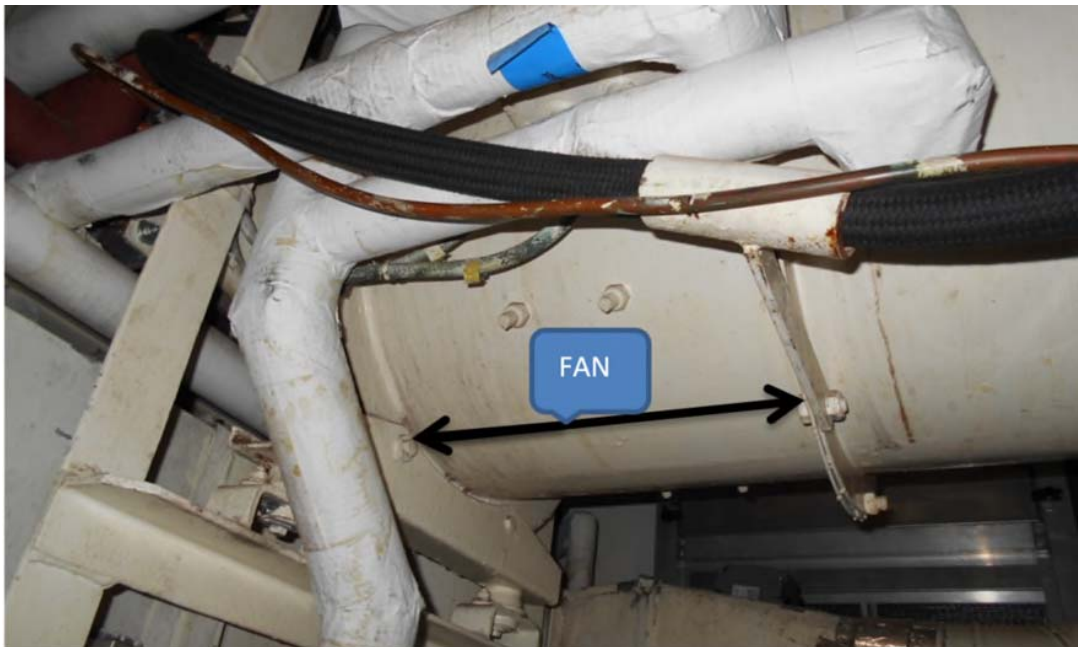

Figure 10: Photograph of in-situ Boat Deck supply axial fan

2.6 Supply Ventilation System for Emergency Generator

2.6.1 Existing Equipment and arrangement

One (1) supply air fan with ducted inlet and outlet (flanged) and the following specifications:

Fan Data	
Fan's ID	SF-2 **(Note B)**
Airflow	2683 CFM
Static Pressure	1.61 INS (combined, on high speed) – **Notes: 3 & B, and 2.6.2.c**
Manufacturer // Model	MYSON // 194P/8P, casing type: L **(Note B)**
Arrangement Type	Form: B, Rotation: Standard **(Note B)**
Pitch Angle	12◦ **(Note B)**
Max Sound Pressure level	85 dBA (actual rating: 73 dBA at 6.5 ft)
Weight (Fan & motor)	170 lbs (excluding accessories)
Accessories	Mounting feet: 2 (C*), Anti-Vibration Mounts
Dimensions	Refer to the Fan Drawing, figure 11, for dimensions
Motor Data	
Type	Single-Speed
Voltage	575 VAC / 3 phase / 60 Hz
Break HP	0.62
Motor HP	1.10
Motor RPM	1750
Amperage	2.05

Note 3: The indicated Static Pressure is for the system comprised of two fans in a 2-stage contra-rotating arrangement. Please refer to 2.6.2.c.

Note B: The manufacturer data sheet shows this ventilation system as One (1) supply air system, comprised of two fans in a 2-stage contra-rotating arrangement. However, the contra-rotating double fan arrangement does not apply – since in fact, only the stage #2 fan was installed when the ship was built.

2.6.2 Alternative Acceptable Arrangement

It is preferable that the replacement fan have the same dimensions as the existing fans. However, if not possible, *while providing the same functional performance*, their arrangement or dimension can vary with reference to Figure 12:

a) Tube Length: Open to proposal – provided that the total length (including the length of transitioning ducts on either sides) can accommodate connection to the ductwork

b) Diameter: Cannot be more than that of the existing fan, but it can be less – provided that the total length can accommodate transitioning to the larger ductwork

c) Static Pressure: 0.9 INS minimum; higher static pressure is preferable if possible.

2.6.3 Related Fan Drawings and Picture

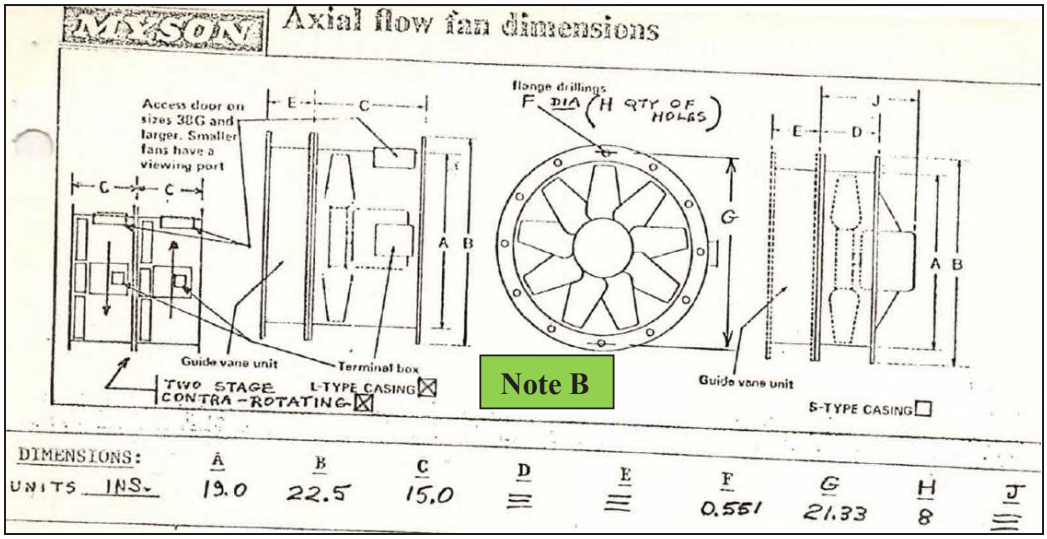

Figure 11: Fan Drawing for SF-2

Figure 12: Photograph of in-situ Emergency Generator supply axial fan

2.7 Supply Ventilation System for Focsule Deck

2.7.1 Existing Equipment and arrangement

One (1) supply air fan with guide vane unit, ducted inlet and outlet (flanged) and the following specifications:

Fan Data	
Fan's ID	SF-1
Airflow	1600 CFM (on high speed)
Static Pressure	0.54 INS (on high speed)
Manufacturer // Model	MYSON // 15GV. 4P/8P, casing type: L
Arrangement Type	Form: B, Rotation: Standard
Pitch Angle	17◦
Max Sound Pressure level	85 dBA (actual rating: 58 dBA at 6.5 ft)
Weight (Fan & motor)	77 lbs (excluding accessories)
Accessories	Mounting feet: 2 (C*), Anti-Vibration Mounts
Dimensions	Refer to the Fan Drawing, figure 13, for dimensions
Motor Data	
Type	2 Speed, double winding
Voltage	575 VAC / 3 phase / 60 Hz
Break HP	0.22 / 0.03
Motor HP	0.75 / 0.1
Motor RPM	1750 / 860
Amperage	1.2 / 0.32

2.7.2 Alternative Acceptable Arrangement

It is preferable that the replacement fan have the same dimensions as the existing fans. However, if not possible, *while providing the same functional performance*, their arrangement or dimension can vary – with reference to Figure 14:

a) Tube Length for the system: Total of 21" maximum (including the 6" length of the guide vane unit)

b) Diameter: Can vary slightly – provided that the total length can accommodate transitioning to the mating ductwork

2.7.3 Related Fan Drawings and Picture

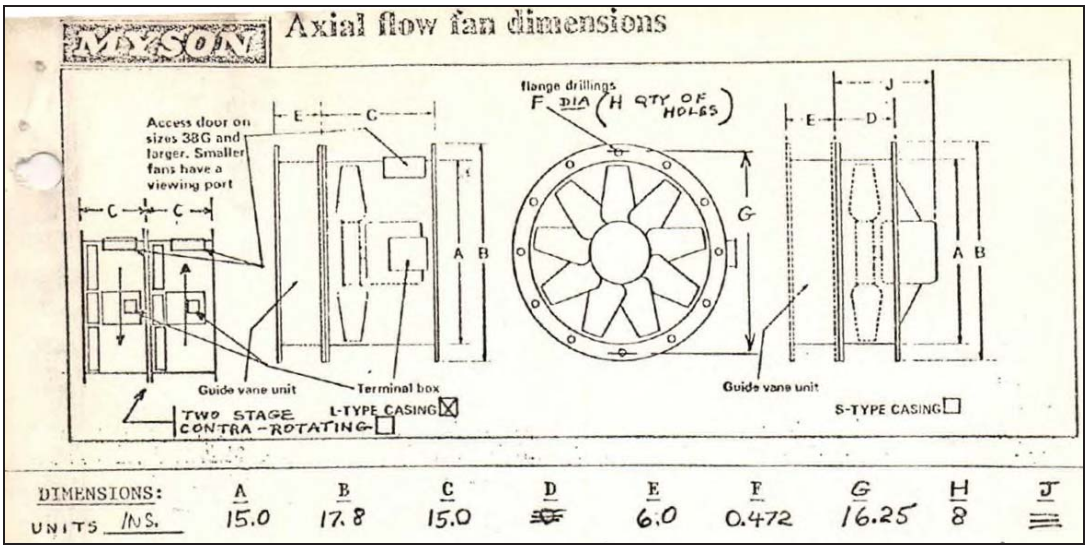

Figure 13: Fan Drawing for SF-1

Figure 14: Photograph of in-situ Focsule Deck supply axial fan

2.8 Exhaust Ventilation System for Galley

2.8.1 Existing Equipment and arrangement

One (1) exhaust air fan with guide vane unit, ducted inlet and outlet (flanged) and the following specifications:

Fan Data	
Fan's ID	EF-2
Airflow	2125 CFM
Static Pressure	2.5 INS
Manufacturer // Model	MYSON // 15GV. 2P, casing type: L
Arrangement Type	Form: BU, Rotation: Standard
Pitch Angle	13◦
Max Sound Pressure level	80 dBA (actual rating: 78 dBA at 6.5 ft)
Weight (Fan & motor)	106 lbs (excluding accessories)
Accessories	Mounting feet: 2 (C*), Anti-Vibration Mounts
Dimensions	Refer to the Fan Drawing, figure 15, for dimensions
Motor Data	
Type	Single Speed
Voltage	575 VAC / 3 phase / 60 Hz
Break HP	1.39
Motor HP	2.0
Motor RPM	3400
Amperage	2.35

2.8.2 Alternative Acceptable Arrangement

It is preferable that the replacement fan have the same dimensions as the existing fans. However, if not possible, *while providing the same functional performance*, their arrangement or dimension can vary:

a) Tube Length for the system: Total of 26" maximum (including the 6" length of the guide vane unit)

b) Diameter: no alternative dimension

2.8.3 Related Fan Drawings and Picture

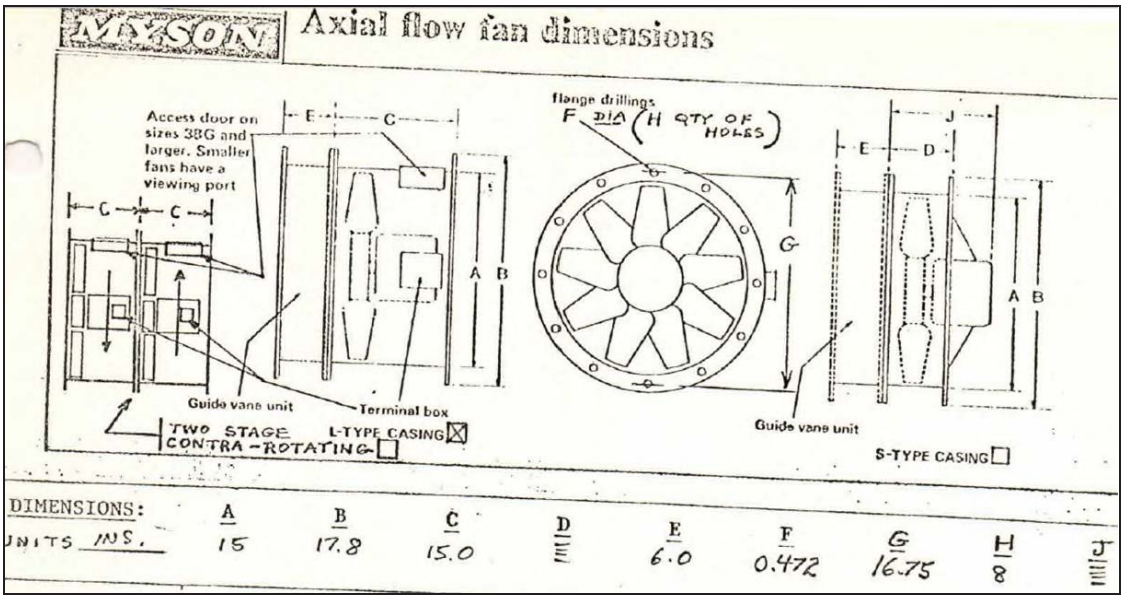

Figure 15: Fan Drawing for EF-2

Figure 16: Photograph of in-situ Galley exhaust axial fan – installed on open deck

2.9 Exhaust Ventilation System for Deck Workshop

2.9.1 Existing Equipment and arrangement

One (1) supply air system, comprised of two exhaust fans in a 2-stage contra-rotating arrangement, with ducted inlet and outlet (flanged) and the following specifications:

Fan Data	
Fan's ID	EF-6
Airflow	424 CFM
Static Pressure	0.832 INS (Combined) – **Note 4**
Manufacturer // Model	MYSON // 12G2. 4P, casing type: L (2 stage)
Arrangement Type	Form: B, Rotation: Contra
Pitch Angle	12◦ and 8◦
Max Sound Pressure level	80 dBA (actual rating: 63 dBA at 6.5 ft)
Weight (Fan & motor)	116 lbs (excluding accessories)
Accessories	Mounting feet: 2 (C*), Inlet Coned (E*)
Dimensions	Refer to the Fan Drawing, figure 17, for dimensions
Motor Data	
Type	Single Speed
Voltage	115 VAC / 1 phase / 60 Hz
Break HP	0.05
Motor HP	0.25
Motor RPM	1750
Amperage	4.0

Note 4: The indicated Static Pressure is for the system comprised of two fans in a 2-stage contra-rotating arrangement. Please refer to 2.9.2.d.

2.9.2 Alternative Acceptable Arrangement

It is preferable that the replacement fan have the same dimensions as the existing fans. However, if not possible, *while providing the same functional performance*, their arrangement or dimension can vary – with reference to Figure 18:

a) It can be only one fan, if it can achieve the required system performance.

b) Tube Length for the system: Total of 30" (or 2x 15") maximum

c) Diameter: Cannot be more than that of the existing fan(s), but it can be less – provided that the total length can accommodate transitioning to the larger ductwork

d) Static Pressure: 0.8 INS minimum; higher static pressure is preferable if possible.

2.9.3 Related Fan Drawings and Picture

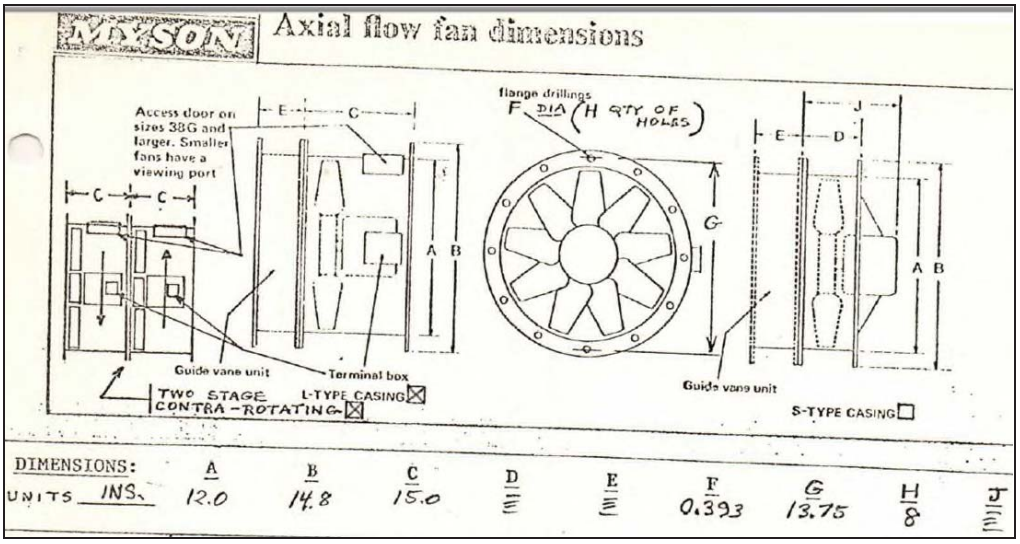

Figure 17: Fan Drawing for EF-6

Figure 18: Photograph of in-situ Deck Workshop supply axial fans

2.10 Supply Ventilation System for MCR

2.10.1 Existing Equipment and arrangement

One (1) supply air fan with ducted inlet and outlet (flanged) and the following specifications – with reference to Note C:

Fan Data	Original Data Sheet	Currently Installed	**Required**
Fan ID	SF-4 **(Note C)**	Not available	
Airflow	1000 CFM	Not adequate nor available	1000 CFM
Static Pressure	1.0 INS (on high speed) **Note 5**	Not adequate nor available	1.0 INS minimum
Manufacturer // Model	MYSON // 12G2. 4P, casing type: L (2 stage)	Not available, **one single fan**	**one single fan (Refer to 2.10.2)**
Arrangement Type	Form: B, Rotation: Contra	Vertically installed with downward flow	Vertically installed with downward flow
Pitch Angle	30◦ and 22◦	Not available	To suit the output requirements
Max Sound Pressure level	70 dBA (actual: 63 dBA at 6.5 ft)	Not available	70 dBA
Weight (Fan & motor)	116 lbs (excluding accessories)		
Accessories	Mounting feet, Anti-Vibration Mounts	Mounting feet, Guide vane section	Mounting feet, Anti-Vibration Mounts
Dimensions	Refer to the Fan Drawing, figure 19	Casing L: 25.5”, Guide Van L: 4.5” Casing OD: 12.25”, Flange OD; 14.8”	Refer to the Fan Drawing, figure 19, and 2.10.2
Motor Data	Original Data Sheet	Currently Installed	**Required**
Type	2 Speed, double winding	Single Speed	Single Speed
Voltage	575 VAC / 3 Ph / 60 Hz	115 VAC/1 Ph/ 60Hz	115 VAC/1 Ph/ 60Hz
Break HP	0.14 / 0.02	0.05 (Estimated)	
Motor HP	0.75 / 0.1	0.5	0.75 max
Motor RPM	1750 / 860	1750	1750
Amperage	Not available	6.8	10.0 **maximum**

Note 5: The indicated Static Pressure, on the original data sheet, is for the system comprised of two fans in a 2-stage contra-rotating arrangement.

Note C: The original supply air system that was designed as per SF-4 data sheet with the fan drawing in Fig. 19, and data as specified in section 2.10.1 is not currently installed.

It is determined that the currently installed fan, with a single speed and 120VAC motor does not meet the MCR's ventilation requirement.

Therefore, the replacement fan must have a single speed 120VAC motor, but must provide the required airflow and pressure.

2.10.2 Alternative Acceptable Arrangement

It is preferable that the replacement fan have the same dimensions as the existing fans. However, if not possible, *while providing the same functional performance*, their arrangement or dimension can vary:

a) Tube Length for the system: Total of up to 30" maximum

b) Diameter: Can be slightly more than that of the existing fan – considering the avail space, and the length of the casing allowing transitioning from larger diameter casing to smaller ductwork.

2.10.3 Related Fan Drawings and Picture

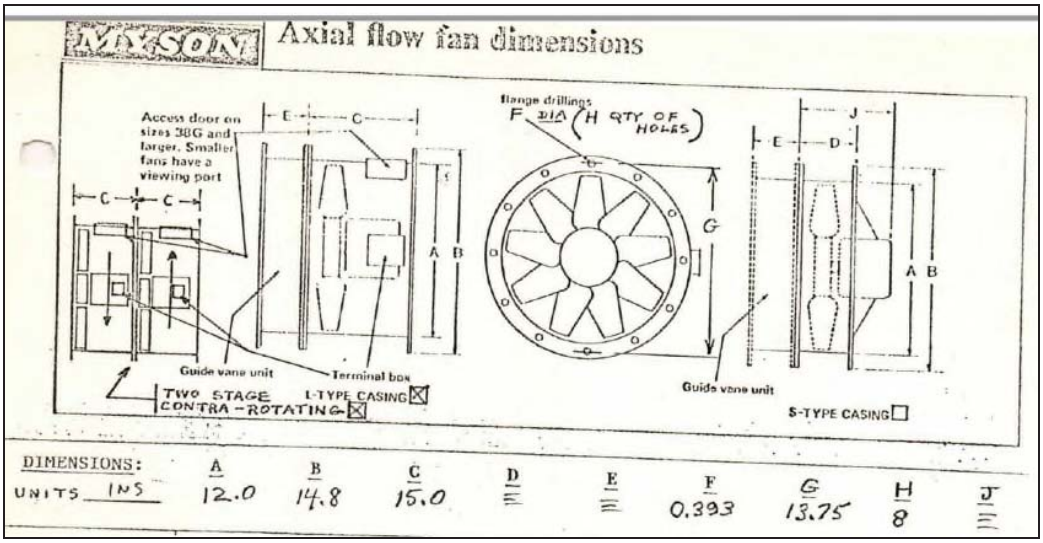

Figure 19: Fan Drawing for SF-4

Figure 20: Photograph of in-situ MCR supply axial fan

2.11 Exhaust Ventilation System for Toilets

2.11.1 Existing Equipment and arrangement

One (1) exhaust air fan with guide vane unit, ducted inlet and outlet (flanged) and the following specifications:

Fan Data	
Fan's ID	SF-3
Airflow	3288 CFM (on high speed)
Static Pressure	2.49 INS (combined, on high speed) – **(Notes 6 & C, and 2.11.2.c)**
Manufacturer // Model	MYSON // 194P/8P, casing type: L **(Note C)**
Arrangement Type	Form: BU, Rotation: standard **(Note C)**
Pitch Angle	18◦ **(Note C)**
Max Sound Pressure level	85 dBA (actual rating: 78 dBA at 6.5 ft)
Weight (Fan & motor)	170 lbs (excluding accessories)
Accessories	Mounting feet: 2 (C*), Anti-Vibration Mounts
Dimensions	Refer to the Fan Drawing, figure 21, for dimensions
Motor Data	
Type	2-Speed, double winding
Voltage	575 VAC / 3 phase / 60 Hz
Break HP	1.0 / 0.13
Motor HP	1.1 / 0.14
Motor RPM	1750 / 870
Amperage	2.05 / 0.53

Note 6: The indicated Static Pressure, on the original data sheet, is for the system comprised of two fans in a 2-stage contra-rotating arrangement. Please refer to 2.11.2.c.

Note D: The manufacturer data sheet shows this ventilation system as One (1) exhaust air system, comprised of two fans in a 2-stage contra-rotating arrangement. However, the contra-rotating double fan arrangement does not apply – since in fact, only the stage #2 fan was installed when the ship was built.

2.11.2 Alternative Acceptable Arrangement

It is preferable that the replacement fan have the same dimensions as the existing fans. However, if not possible, *while providing the same functional performance*, their arrangement or dimension can vary:

a) Tube Length: 15" to 22" maximum

b) Diameter: no alternative.

c) Static Pressure: 1.4 INS minimum; higher static pressure is preferable if possible.

2.11.3 Related Fan Drawings and Picture

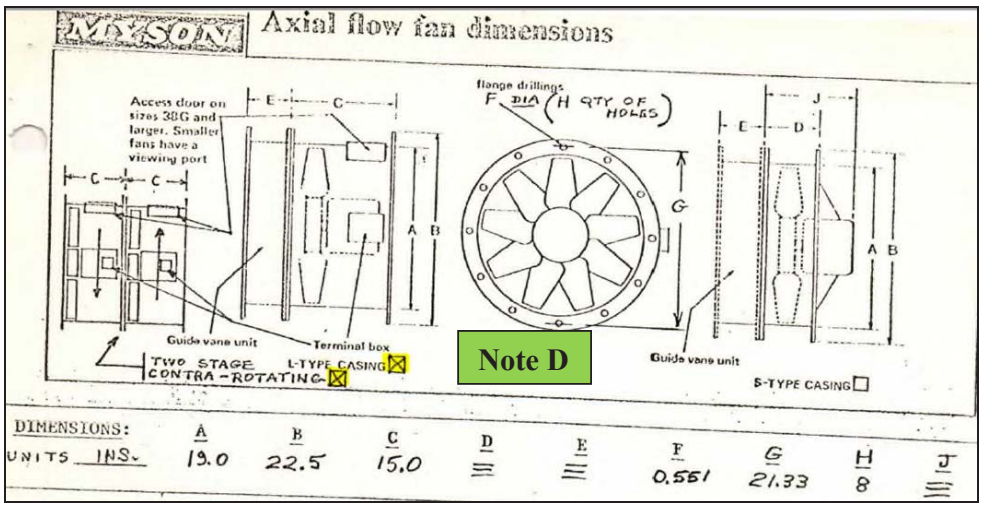

Figure 21: Fan Drawing for SF-3

Figure 22: Photograph of in-situ toilet Exhaust axial fans

2.12 Supply Ventilation System for Dry Store

2.12.1 Existing Equipment and arrangement

One (1) exhaust air system, comprised of two exhaust fans in a 2-stage contra-rotating arrangement, with ducted inlet and outlet (flanged) and the following specifications:

Each Fan Data	
Fans' ID	EF-3.1 & EF-3.2
Airflow	1234 CFM
Static Pressure	0.809 INS (combined) **Note 7**
Manufacturer // Model	MYSON // 12G2. 4P, casing type: L (2 stage)
Arrangement Type	Form: BU, Rotation: Contra
Pitch Angle	34◦ and 24◦
Max Sound Pressure level	80 dBA (actual rating: 63 dBA at 6.5 ft)
Weight (Fan & motor)	116 lbs (excluding accessories)
Accessories	Mounting plates: 2 (C*), Inlet Cone (E*)
Dimensions	Refer to the Fan Drawing, figure 23, for dimensions
Each Motor Data	
Type	Single Speed
Voltage	115 VAC / 1 phase / 60 Hz
Break HP	0.16
Motor HP	0.25
Motor RPM	1750
Amperage	4.0

Note 7: The indicated Static Pressure, on the original data sheet, is for the system comprised of two fans in a 2-stage contra-rotating arrangement.

2.12.2 Alternative Acceptable Arrangement

It is preferable that the replacement fan have the same dimensions as the existing fans. However, if not possible, *while providing the same functional performance*, their arrangement or dimension can vary:

a) It can be only one fan, if it can achieve the required system performance.

b) Tube Length for the system: Total of 30" (or 2x 15") maximum

c) Diameter: no alternative dimension

2.12.3 Related Fan Drawings and Picture

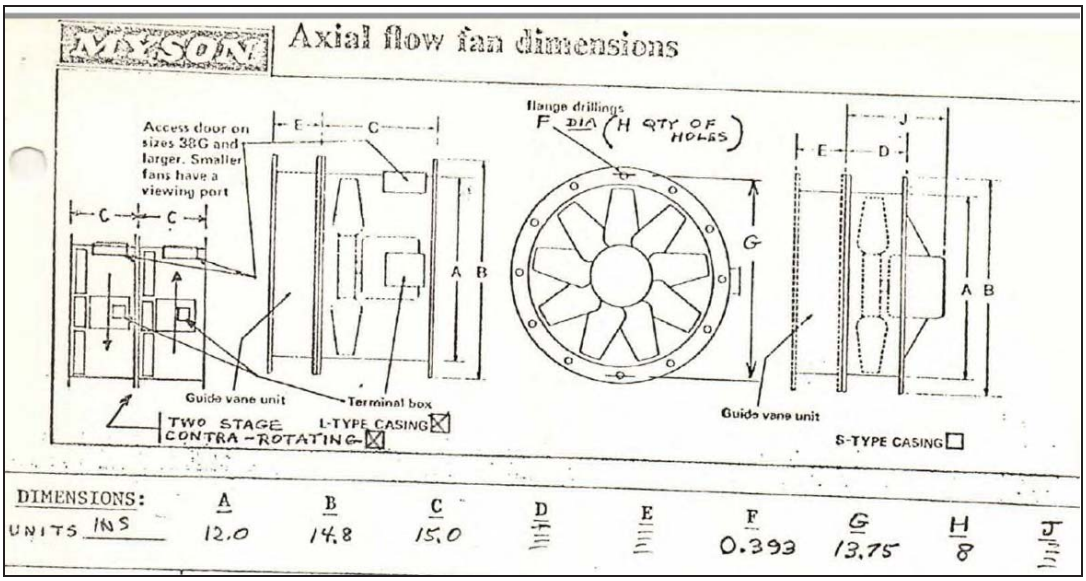

Figure 23: Fan Drawing for EF-3

Figure 24: Photograph of in-situ Deck Workshop supply axial fans

3 REQUIREMENTS

The supplied equipment must have a minimum service life expectancy of seven (7) years, and can be supported by well-established distributors within Canada.

3.1 Environmental Requirements

3.1.1 All fans to have aluminum propeller hubs coated in protective coating suitable for marine environment.

3.1.2 All fans and motors must be suitable for operation in environments with temperature range of -40°C to 45°C.

3.2 Technical Requirements

1) All fans and their motors must be suitable for marine application; and motors must be Typed Approved and acceptable to Transport Canada.

2) Direction of airflow must be marked by an arrow on each Fan's casing.

3) All fans must be direct drive tube axial fans.

4) All motors must be of Totally Enclosed Fan Cooled (TEFC) type.

5) ~~All motors must be fitted with thermal protection~~. This requirement is removed.

6) All fans' casings must match the existing fans listed in section 2 as much as possible, or to their provided alternatives options.

7) All fans must have Corrosion resistant cast aluminium impellers with aerofoil blades and adjustable pitch.

8) Fans' BHP are not critical and could vary within +20-25% range.

9) All fans with 2-Speed motors must be of double winding type. Motors capable of operation with Variable Frequency Drives (VFD), or 2-Speed motors with single windings are not acceptable.

10) All fans must be of heavy duty, marine type construction with hot dipped galvanized fan housings, of minimum **6mm thickness**, or material of equal strength to original fan casings; 5083 Marine Aluminum can be acceptable.

11) All fans must have stainless steel hardware used for fan assembly.

12) All fans must be provided with welded inlet and outlet flanges without any drilled holes (blank flanges).

13) All fans must have junction boxes mounted on their casing exterior with factory wired connection to the motor.

14) All fans must have IP 56 class protection for junction boxes and motor connections.

15) All fan motors have Class F insulation.

16) All fans must be supplied with sealed bearings.

17) Fans' accessories, as noted in each fan table, must be provided as follows:

- Vibration Isolators: suitable for Marine Application (non-spring type)
- Mounting plates or feet – if the new fan's dimensions differ from the existing fan – rendering the existing plates or feet unsuitable.
- Inlet Cone or guide vanes – if required to achieve the required performance

4 DELIVERABLES

4.1 New Fans

Ventilation Systems	Quantities of Fans Required	Fans' New IDs (to be included on their Nameplates)
Engine room supply	2	SF-7 and SF-8
Engine room exhaust	2	EF-7 and EF-8
Main Engine (ME) supply	2	SF-5 and SF-6
Main deck supply	1	SF-3
Boat deck supply	1	SF-2
Emergency generator supply	1	SF-9
Foscule deck supply	1	SF-1
Galley exhaust	1	EF-2
Deck workshop exhaust	1 or 2 (Contra-rotating units)	EF-6 or (EF-6.1 & EF-6.2)
MCR supply	1 or 2 (Contra-rotating units)	SF-4 or (SF-4.1 & SF-4.2)
Toilet exhaust	1	EF-4
Dry stores exhaust	1 or 2 (Contra-rotating units)	EF-3 or (EF-3.1 & EF-3.2)

4.2 Documentation

4.2.1 Each Fan must be provided with the following documents.

a) An Installation, Operation, and Maintenance Manual – showing the specific information dedicated to each Particular Fan and Motor, including maintenance schedule and consumables types, if any.

b) Factory Acceptance Test documentation for each fan that must contain: fan and motor serial numbers and performance data sheets including applicable curves and all related information. The fan ID and its service area, must be indicated on each data sheet.

c) Dimensional drawings for each fan including, material thickness, weight of complete assembly without motor, and OEM name and Part Number.

d) Dimensional drawings for each motor including weight, and OEM name and Part Number.

e) The sound power levels with the fan being ducted, at both inlet and discharge sides.

f) All drawings and bill of materials used for the new Fan.

4.2.2 The following information must be provided on the Nameplate:

- Fan ID (as per table in 4.1)
- Fan/motor Serial number(s)
- Fan model
- Date of manufacture
- Pitch angle
- Power supply Voltage/phase/Hz
- RPM (for each speed, if 2-Speed motor)
- Amps (for each speed, if 2-Speed motor)
- Break HP (for each speed, if 2-Speed motor)
- Motor HP (for each speed, if 2-Speed motor)

4.2.3 The Contractor must supply one (1) paper copy and one (1) electronic copy in PDF format for each of the required documents. Documents must be tailored to the fans being supplied.

4.2.4 All documents must be supplied in English language.

5 TESTS & TRIALS

All fans must be Factory Tested and certified for their physical and functional data to be compliant with the Contract requirements; and must:

- be statically and dynamically balanced to ISO 1940 standard
- have efficiency classification as per ISO 12759 or equal
- be factory test for their performance as per ISO 5801:2017, or equal

Appendix A

Mounting Position, Direction of Rotation and Air Flow Direction of Fans acc. ISO 13349